MIAMI-DADE COUNTY
DEPARTMENT OF PERMITTING, ENVIRONMENT, AND REGULATORY AFFAIRS (PERA)
BOARD AND CODE ADMINISTRATION DIVISION

NOTICE OF ACCEPTANCE (NOA)

MIAMI-DADE COUNTY
PRODUCT CONTROL SECTION
11805 SW 26 Street, Room 208
Miami, Florida 33175-2474
T (786) 315-2590 F (786) 315-2599
www.miamidade.gov/pera/

Rollac Shutter of Texas, Inc.
5331 W. Orange Street
Pearland, Texas 77581

SCOPE: This NOA is being issued under the applicable rules and regulations governing the use of construction materials. The documentation submitted has been reviewed and accepted by Miami-Dade County PERA-Product Control Section to be used in Miami Dade County and other areas where allowed by the Authority Having Jurisdiction (AHJ).

This NOA shall not be valid after the expiration date stated below. The Miami-Dade County Product Control Section (In Miami Dade County) and/or the AHJ (in areas other than Miami Dade County) reserve the right to have this product or material tested for quality assurance purposes. If this product or material fails to perform in the accepted manner, the manufacturer will incur the expense of such testing and the AHJ may immediately revoke, modify, or suspend the use of such product or material within their jurisdiction. PERA reserves the right to revoke this acceptance, if it is determined by Miami-Dade County Product Control Section that this product or material fails to meet the requirements of the applicable building code. This product is approved as described herein, and has been designed to comply with the Florida Building Code, including the High Velocity Hurricane Zone.

DESCRIPTION: Roll 55–X Slat End Retention Roll–Up Hurricane Abatement System

APPROVAL DOCUMENT: Drawing No. **12-041**, titled "RLL 55–X Slat End Retention Roll–Up Hurricane Abatement", sheets 1 through 19 of 19, prepared by the manufacturer, dated 02/17/2012, signed and sealed by Walter A. Tillit, Jr., P.E., bearing the Miami-Dade County Product Control revision stamp with the Notice of Acceptance number and expiration date by the Miami-Dade County Product Control Section.

MISSILE IMPACT RATING: Large and Small Missile Impact Resistant

LABELING: Each unit shall bear a permanent label with the manufacturer's name or logo, city, state, the following statement: "Miami-Dade County Product Control Approved" and NOA number, per TAS-201, TAS-202, and TAS-203, unless otherwise noted herein.

RENEWAL of this NOA shall be considered after a renewal application has been filed and there has been no change in the applicable building code negatively affecting the performance of this product.

TERMINATION of this NOA will occur after the expiration date or if there has been a revision or change in the materials, use, and/or manufacture of the product or process. Misuse of this NOA as an endorsement of any product, for sales, advertising or any other purposes shall automatically terminate this NOA. Failure to comply with any section of this NOA shall be cause for termination and removal of NOA.

ADVERTISEMENT: The NOA number preceded by the words Miami-Dade County, Florida, and followed by the expiration date may be displayed in advertising literature. If any portion of the NOA is displayed, then it shall be done in its entirety.

INSPECTION: A copy of this entire NOA shall be provided to the user by the manufacturer or its distributors and shall be available for inspection at the job site at the request of the Building Official.

This NOA **revises NOA # 09-0513.04** and consists of this page 1 and evidence page E-1, as well as approval document mentioned above.

The submitted documentation was reviewed by **Carlos M. Utrera, P.E.**

MIAMI-DADE COUNTY APPROVED

05/31/2012

NOA No. 12-0315.13
Expiration Date: July 15, 2014
Approval Date: June 7, 2012

NOTICE OF ACCEPTANCE: EVIDENCE SUBMITTED

A. DRAWINGS

1. Drawing No. **12-041**, titled "RLL 55–X Slat End Retention Roll–Up Hurricane Abatement", sheets 1 through 19 of 19, prepared by the manufacturer, dated 02/17/2012, signed and sealed by Walter A. Tillit, Jr., P.E.

B. TESTS *"Submitted under NOA # 09-0513.04"*

1. Fenestration Testing Laboratory, Inc. Test Report # **5873** on Large Missile Impact Test per FBC TAS-201, Cyclical Pressure Test per FBC TAS 203 and Uniform Static Air Pressure Test per FBC TAS 202, dated 03/04/2009, signed and sealed by Carlos Rionda, P.E.
2. Fenestration Testing Laboratory, Inc., Impact Test per FBC TAS-201, Test Report # **5894,** on mullion, dated 03/04/2009, signed and sealed by Carlos Rionda, P.E.

C. CALCULATIONS *"Submitted under NOA # 09-0513.04"*

1. Anchor Calculations and structural analysis, prepared by Tilteco Inc., dated 01/15/2009, signed and sealed by Walter A. Tillit, Jr., P.E.

D. QUALITY ASSURANCE

1. Miami-Dade Department of Permitting, Environment, and Regulatory Affairs (PERA)

D. MATERIAL CERTIFICATIONS *"Submitted under NOA # 09-0513.04"*

1. Mill Certificate from Guangcheng Aluminum Co. LTD. Regarding mechanical Properties and chemical composition of slat's extruded aluminum material.

E. STATEMENTS

1. Statement letter of code conformance to the 2010 FBC, issued by Tilteco, Inc, dated 03/13/2012, signed and sealed by Walter A. Tillit, Jr., P.E.

   "Submitted under NOA # 09-0513.04"

2. Letters of 2007 code compliance and no financial interest, issued by Tilteco Inc. dated 04/24/09, signed and sealed by Walter A. Tillit, Jr. P. E

05/31/2012

Carlos M. Utrera, P.E.
Product Control Examiner
NOA No. 12-0315.13
Expiration Date: July 15, 2014
Approval Date: June 7, 2012

GENERAL NOTES:

1. ROLL-UP HURRICANE ABATEMENT SHOWN ON THIS PRODUCT EVALUATION DOCUMENT (**P.A.D.**) HAS BEEN VERIFIED FOR COMPLIANCE IN ACCORDANCE WITH THE **2007 & 2010** EDITIONS OF THE FLORIDA BUILDING CODE. THIS PRODUCT SYSTEM MAY BE INSTALLED AT HIGH VELOCITY HURRICANE ZONES.

   DESIGN WIND LOADS SHALL BE DETERMINED AS PER SECTIONS **1620** OF THE ABOVE MENTIONED CODES, USING ASCE 7-05 STANDARD FOR INSTALLATIONS UNDER 2007 FBC & ASCE 7-10 FOR INSTALLATIONS UNDER 2010 FBC AND SHALL NOT EXCEED THE MAXIMUM (A.S.D.) DESIGN PRESSURE RATINGS INDICATED ON SHEETS 10, 11 & 15 THRU 19.
   IN ORDER TO VERIFY THE ABOVE CONDITION, ULTIMATE DESIGN WIND LOADS DETERMINED PER ASCE 7-10 SHALL BE FIRST REDUCED TO A.S.D. DESIGN WIND LOADS BY MULTIPLYING THEM BY 0.6 IN ORDER TO COMPARE THESE W/ MAX. (A.S.D.) DESIGN PRESSURE RATINGS INDICATED ON SHEETS 10, 11 & 15 THRU 19.

   IN ORDER TO VERIFY THAT COMPONENTS AND ANCHORS ON THIS P.A.D. AS TESTED WERE NOT OVER STRESSED, A 33% INCREASE IN ALLOWABLE STRESS FOR WIND LOADS WAS NOT USED IN THEIR ANALYSIS. FASTENERS SPACING TO WOOD HAS BEEN DETERMINED IN ACCORDANCE WITH N.D.S. 2005.
   ROLL-UP HURRICANE ABATEMENT ADEQUACY FOR IMPACT AND FATIGUE RESISTANCE HAS BEEN VERIFIED IN ACCORDANCE WITH SECTION **1626** OF THE ABOVE MENTIONED CODE AS PER FENESTRATION TESTING LAB. REPORTS # 5873 & 5894 AS PER TAS-201, TAS-202 AND TAS-203 PROTOCOLS. SEE NOTES *, Δ ON SHEETS 12 & 18 FOR ADDITIONAL LIMITATIONS.

2. ALL ALUMINUM EXTRUSIONS SHALL BE AS INDICATED ON SHEET 2.

3. EVERY OTHER SLAT SHALL INCLUDE WIND LOCKS AT EACH END (SEE COMPONENTS SHEET). EVERY SLAT (A) ADJACENT AND ABOVE BOTTOM SLAT (A1) MUST INCLUDE WIND LOCKS.

4. ALL SCREWS (EXCEPT COMPONENT (C1)) TO BE STAINLESS STEEL 304 OR 316 SERIES WITH 50 ksi YIELD STRENGTH AND 90 ksi TENSILE STRENGTH OR CORROSION RESISTANT COATED CARBON STEEL AS PER DIN 50018. ALL S.D.S. ARE TEK SCREWS MANUFACTURED BY ITW BUILDEX & SHALL COMPLY W/ FLORIDA BUILDING CODE SECTION 2411.3.3.4.

5. BOLTS TO BE ASTM A-307, GALVANIZED OR AISI 304 OR 316 SERIES STAINLESS STEEL WITH 36 ksi MINIMUM YIELD STRENGTH.

6. ANCHORS TO WALL FOR (B1), (B2), (B3) & (B4) SIDE RAILS SHALL BE AS FOLLOWS: (UNLESS OTHERWISE NOTED)

   (A) TO EXISTING POURED CONCRETE: MIN. f'c = 2899 p.s.i. COMPRESSIVE STRENGTH.

   -5/16"ø CARBON STEEL TAPCON XL ANCHORS AS MANUFACTURED BY ITW BUILDEX, INC.

   A.1) MINIMUM EMBEDMENT OF TAPCON XL ANCHORS INTO POURED CONCRETE SHALL BE 2 1/4". NO EMBEDMENT INTO STUCCO SHALL BE CONSIDERED AS PART OF THE REQUIRED EMBEDMENT.

   A.2) MINIMUM EDGE DISTANCE (E.D.) OF TAPCON XL ANCHORS INTO POURED CONCRETE SHALL BE 4". EDGE DISTANCE IS BEYOND ANY FINISH MATERIAL.

   A.3) IN CASE THAT PRECAST STONE, PRECAST CONCRETE OR BRICK PANELS, VENEER OR PAVERS BE FOUND ON THE EXISTING WALL, ANCHORS SHALL BE LONG ENOUGH TO REACH THE MAIN SUBSTRATE BEHIND SUCH PANELS. MINIMUM EMBEDMENT SHALL BE AS INDICATED ON NOTE A.1 ABOVE.

   (B) TO EXISTING GROUT FILLED CELL CONCRETE BLOCK WALL: ASTM C-90

   -5/16"ø CARBON STEEL TAPCON XL ANCHORS, AS MANUFACTURED BY ITW BUILDEX, INC.

   B.1) MINIMUM EMBEDMENT OF TAPCON XL ANCHORS, INTO THE GROUT FILLED CELL CONCRETE BLOCK UNIT SHALL BE 2 1/4". NO EMBEDMENT INTO STUCCO SHALL BE CONSIDERED AS PART OF THE REQUIRED EMBEDMENT.

   B.2) MINIMUM EDGE DISTANCE (E.D.) OF TAPCON XL ANCHORS INTO GROUT FILLED CELL CONCRETE BLOCK SHALL BE 4". EDGE DISTANCE IS BEYOND ANY FINISH MATERIAL

   B.3) IN CASE THAT PRECAST STONE, PRECAST CONCRETE OR BRICK PANELS, VENEER OR PAVERS BE FOUND ON THE EXISTING WALL, ANCHORS SHALL BE LONG ENOUGH TO REACH THE MAIN SUBSTRATE BEHIND SUCH PANELS. MINIMUM EMBEDMENT SHALL BE AS INDICATED ON NOTE B.1 ABOVE.

   (C) TO EXISTING WOOD FRAME BUILDING: SOUTHERN PINE #2 W/ G=0.55 MIN., DOUGLAS FIR-SOUTH (G=0.46) OR SPRUCE PINE-FIR SOUTH, (G=0.36).

   -5/16"ø CARBON STEEL ULTRACON ANCHORS, AS MANUFACTURED BY ELCO CONSTRUCTION PRODUCTS.

   C.1) MINIMUM PENETRATION OF ULTRACON ANCHORS, INTO THE WOOD FRAME UNIT SHALL BE 2 1/2". (MUST INCLUDE 2" THREADED LENGTH) NO PENETRATION INTO STUCCO SHALL BE CONSIDERED AS PART OF THE REQUIRED PENETRATION.

   C.2) MINIMUM EDGE DISTANCE (E.D.) OF ULTRACON ANCHORS, INTO WOOD SHALL BE 2". EDGE DISTANCE IS BEYOND ANY FINISH MATERIAL

   C.3) IN CASE THAT PRECAST STONE, PRECAST CONCRETE OR BRICK PANELS, VENEER OR PAVERS BE FOUND ON THE EXISTING WALL, ANCHORS SHALL BE LONG ENOUGH TO REACH THE MAIN SUBSTRATE BEHIND SUCH PANELS. MINIMUM THREADED PENETRATION SHALL BE AS INDICATED ON NOTE C.1 ABOVE.

7. ANCHORS SHALL BE INSTALLED FOLLOWING ALL OF THE RECOMMENDATIONS AND SPECIFICATIONS OF THE ANCHOR'S MANUFACTURER.

8. ANCHORS REQUIRED FOR MULLION CONNECTIONS SHALL BE AS SPECIFIED ON APPLICABLE SECTIONS SHOWN ON SHEETS 13 & 14 RESPECTIVELY.

   -3/4"ø KWIK BOLT TZ EXPANSION ANCHOR TO BE AS MANUFACTURED BY HILTI, INC.

   MINIMUM EDGE DISTANCE AND SPACING FOR ABOVE MENTIONED ANCHORS SHALL BE AS INDICATED BELOW OR AT ABOVE MENTIONED SHEET. EDGE DISTANCE AND EMBEDMENTS ARE BEYOND ANY FINISH MATERIAL.

ANCHOR	SPACING @ 100%	EDGE DISTANCE @ 100%	EMBEDMENT	
			CONCRETE	GROUT FILLED OR CONCRETE BLOCK
KWIK BOLT TZ	27"	9"	4 3/4" (3000 psi)	-

9. ROLL-UP MECHANISM NOT PART OF THIS APPROVAL, BUT SHALL BE CERTIFIED BY AN INDEPENDENT TESTING AGENCY.

10. IT SHALL BE THE RESPONSIBILITY OF THE CONTRACTOR TO VERIFY THE SOUNDNESS OF THE STRUCTURE WHERE SHUTTER IS TO BE ATTACHED TO INSURE PROPER ANCHORAGE. THIS SHUTTER SHALL ONLY BE ATTACHED TO CONCRETE, GROUT FILLED CELL CONCRETE BLOCK OR WOOD FRAME BUILDINGS.

11. THIS PRODUCT INSTALLATION SHALL COMPLY WITH SPECS INDICATED IN THIS DRAWING PLUS ANY BUILDING AND ZONING REGULATIONS PROVIDED BY THE JURISDICTION WHERE PERMIT IS APPLIED TO.

12. THE INSTALLATION CONTRACTOR IS TO SEAL/CAULK ALL PRODUCT COMPONENT EDGES WHICH REMAIN IN CONTINUOUS CONTACT WITH THE BUILDING TO PREVENT WIND/RAIN INTRUSION. CAULK AND SEAL SHUTTER TRACKS ALL AROUND FULL LENGTH.

13. (a) THIS P.A.D. PREPARED BY THIS ENGINEER IS GENERIC AND DOES NOT PROVIDE INFORMATION FOR A SITE SPECIFIC PROJECT; i.e. WHERE THE SITE CONDITIONS DEVIATE FROM THE P.A.D.

    (b) CONTRACTOR TO BE RESPONSIBLE FOR THE SELECTION, PURCHASE AND INSTALLATION INCLUDING LIFE SAFETY OF THIS PRODUCT, BASED ON THIS P.A.D. PROVIDED HE/SHE DOES NOT DEVIATE FROM THE CONDITIONS DETAILED ON THIS DOCUMENT. CONSTRUCTION SAFETY AT SITE IS THE CONTRACTOR'S RESPONSIBILITY.

    (c) THIS P.A.D. WILL BE CONSIDERED INVALID IF ALTERED BY ANY MEANS.

    (d) SITE SPECIFIC PROJECTS SHALL BE PREPARED BY A REGISTERED ENGINEER OR ARCHITECT WHICH WILL BECOME THE ENGINEER OF RECORD (E.O.R.) FOR THE PROJECT AND WHO WILL BE RESPONSIBLE FOR THE PROPER USE OF THE P.A.D. ENGINEER OF RECORD, ACTING AS A DELEGATED ENGINEER TO THE P.A.D. ENGINEER, SHALL SUBMIT TO THIS LATTER THE SITE SPECIFIC DRAWINGS FOR REVIEW.

    (e) THIS P.A.D. SHALL BEAR THE DATE AND ORIGINAL SEAL AND SIGNATURE OF THE PROFESSIONAL ENGINEER OF RECORD THAT PREPARED IT.

14. A PERMANENT SHUTTER MANUFACTURER'S LABEL SHALL BE PLACED ON THE EXPOSED SURFACE OF THE SIDE RAIL APPROXIMATELY 4" BELOW THE TOP OF SUCH RAIL
    LABEL SHALL READ AS FOLLOWS:
    ROLLAC SHUTTER OF TEXAS, INC.
    MIAMI, FLORIDA
    MIAMI-DADE COUNTY PRODUCT CONTROL APPROVED.

PRODUCT REVISED
as complying with the Florida Building Code
Acceptance No 12-0315.13
Expiration Date 07/15/2014
By _____
Miami Dade Product Control

FLORIDA BUILDING CODE. (High Velocity Hurricane Zone)

MIAMI-DADE COUNTY

WALTER A. TILLIT JR. LICENSE No. 44167 STATE OF FLORIDA PROFESSIONAL ENGINEER

P.E. SEAL/SIGNATURE/DATE

©2012 TILTECO INC.

TILTECO INC.
TILLIT TESTING & ENGINEERING COMPANY
6395 N.W. 36th. St., Ste. 305 – VIRGINIA GARDENS, Fl. 33166
Phone : (305) 871-1530 , Fax : (305) 871-1531
e-mail: tilteco@aol.com
EB-0006719
WALTER A. TILLIT Jr., P.E.
FLORIDA Lic. # 44167

RLL 55-X SLAT END RETENTION
ROLL-UP HURRICANE ABATEMENT

ROLLAC SHUTTER OF TEXAS, INC.
5331 ORANGE STREET
PEARLAND, TX. 77581
PH:(281) 485-1911, FAX:(281) 485-0839

REV N°	DESCRIPTION	DATE	REV N°	DESCRIPTION	DATE
1	OLD 09-004	02/17/12	3		
2			4		

I.A./R.E./A.G. DRAWN BY
02/17/12 DATE
12-041 DRAWING N°

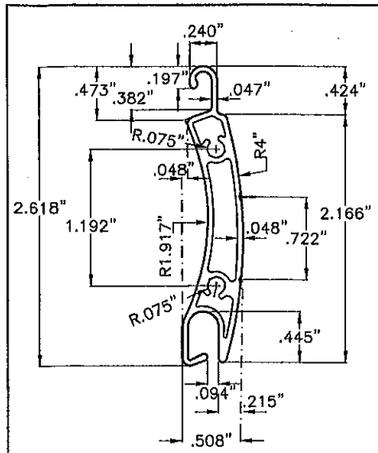

(A) SLAT

6061–T6 OR 6005–T5 ALUMINUM ALLOY
SCALE: 3/4" = 1"

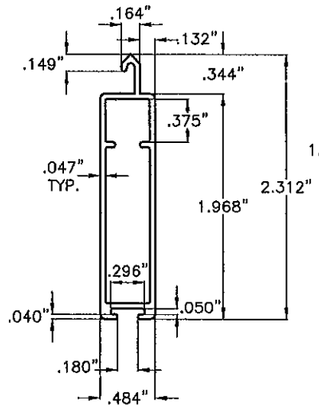

(A1) BOTTOM SLAT

6063–T6 ALUMINUM ALLOY
SCALE: 3/4"=1"

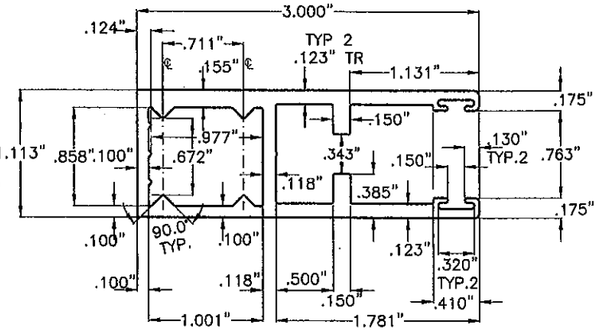

(B1) TYPE 1 SIDE RAIL

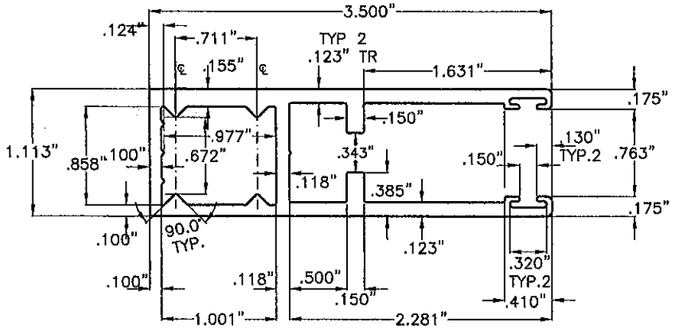

(B3) TYPE 3 SIDE RAIL

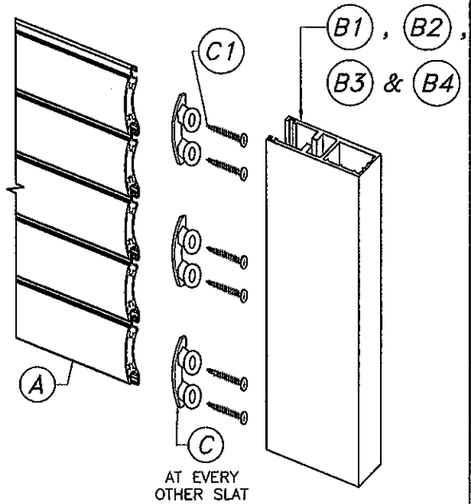

SLAT ASSEMBLY DETAIL:
N.T.S.

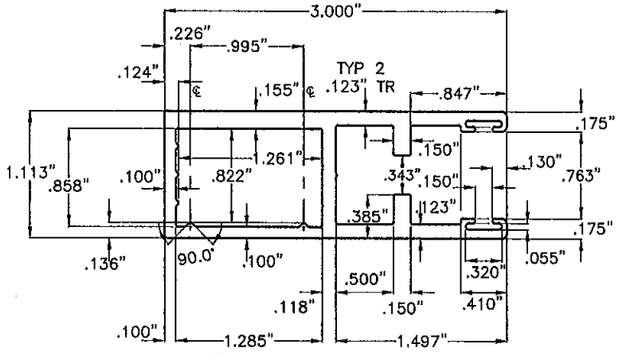

(B2) TYPE 2 SIDE RAIL

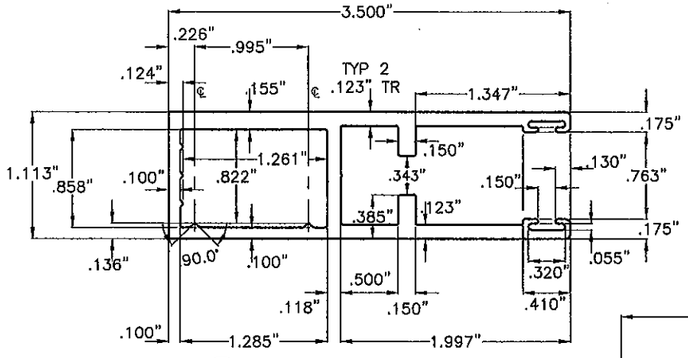

(B4) TYPE 4 SIDE RAIL

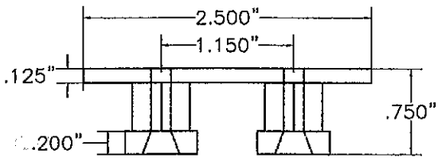

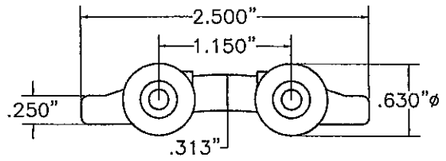

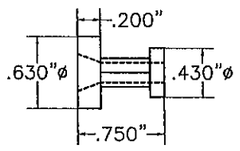

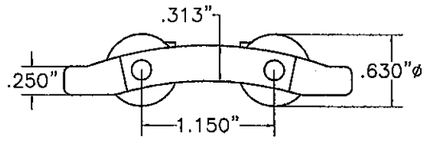

(C) WIND LOCK:

RIGID NYLON Ftu = 5001 psi.
SCALE: 3/4" = 1"

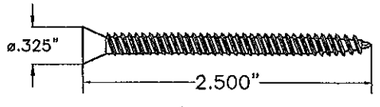

(C1) WIND LOCK SCREW:

(2) #8–18 x 2 1/2" F.H. S.S. AISI 410 SERIES, COATED WITH ROLLAC–1000 CHROMED–FREE ANTI–CORROSION COATING SYSTEM; MANUFACTURED AND APPLIED BY SUN BELT COATING, LLC
(Min. Fy = 121.1 ksi, Min. Ftu = 164.6 ksi)
SCALE: 3/4" = 1"

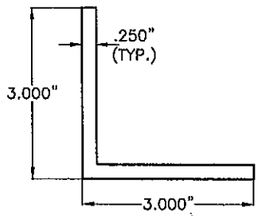

(D) ALUMINUM INSIDE MOUNT ANGLE

6063–T6 ALUMINUM ALLOY
SCALE: 3/8" = 1"

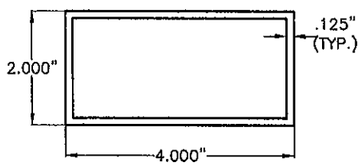

(E) ALUMINUM BUILD–OUT TUBE

6063–T6 ALUMINUM ALLOY
SCALE: 3/8" = 1"

SIDE RAILS:

6005–T5 ALUMINUM ALLOY
SCALE: 3/4" = 1"

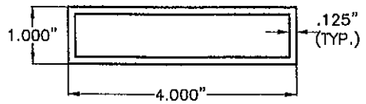

(E1) ALUMINUM BUILD–OUT TUBE

6063–T6 ALUMINUM ALLOY
SCALE: 3/8" = 1"

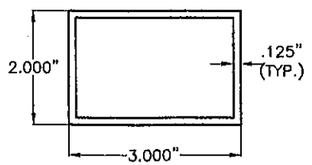

(E2) ALUMINUM BUILD–OUT TUBE

6063–T6 ALUMINUM ALLOY
SCALE: 3/8" = 1"

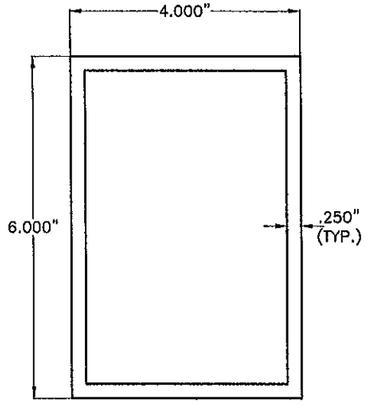

(F) TYPE 1 MULLION

6061–T6 ALUMINUM ALLOY
SCALE: 3/8" = 1"

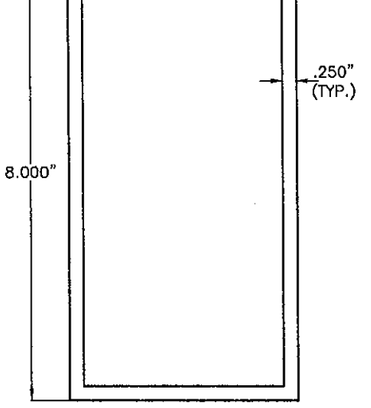

(G) TYPE 2 MULLION

6061–T6 ALUMINUM ALLOY
SCALE: 3/8" = 1"

PRODUCT REVISED
as complying with the Florida Building Code
Acceptance No. 12-0315.13
Expiration Date 07/15/2014
By _____
Miami Dade Product Control

FLORIDA BUILDING CODE. (High Velocity Hurricane Zone)

WALTER A. TILLIT JR. LICENSE No. 44167 STATE OF FLORIDA PROFESSIONAL ENGINEER

MIAMI–DADE COUNTY P.E. SEAL SIGNATURE/DATE

©2012 TILTECO INC.

TILTECO INC.
TILLIT TESTING & ENGINEERING COMPANY
8355 N.W. 36th, St., Ste. 305 – VIRGINIA GARDENS, Fl. 33166
Phone : (305) 871–1530 , Fax : (305) 871–1531
e–mail: tilteco@aol.com
EB–0006719
WALTER A. TILLIT Jr., P.E.
FLORIDA Lic. # 44167

RLL 55-X SLAT END RETENTION
ROLL-UP HURRICANE ABATEMENT

ROLLAC SHUTTER OF TEXAS, INC.
5331 ORANGE STREET
PEARLAND, TX. 77581
PH:(281) 485-1911, FAX:(281) 485-0839

REV N°	DESCRIPTION	DATE	REV N°	DESCRIPTION	DATE
1	OLD 09–004	02/17/12	3		
2			4		

I.A./R.E./A.G.
DRAWN BY

02/17/12
DATE

12–041
DRAWING N°

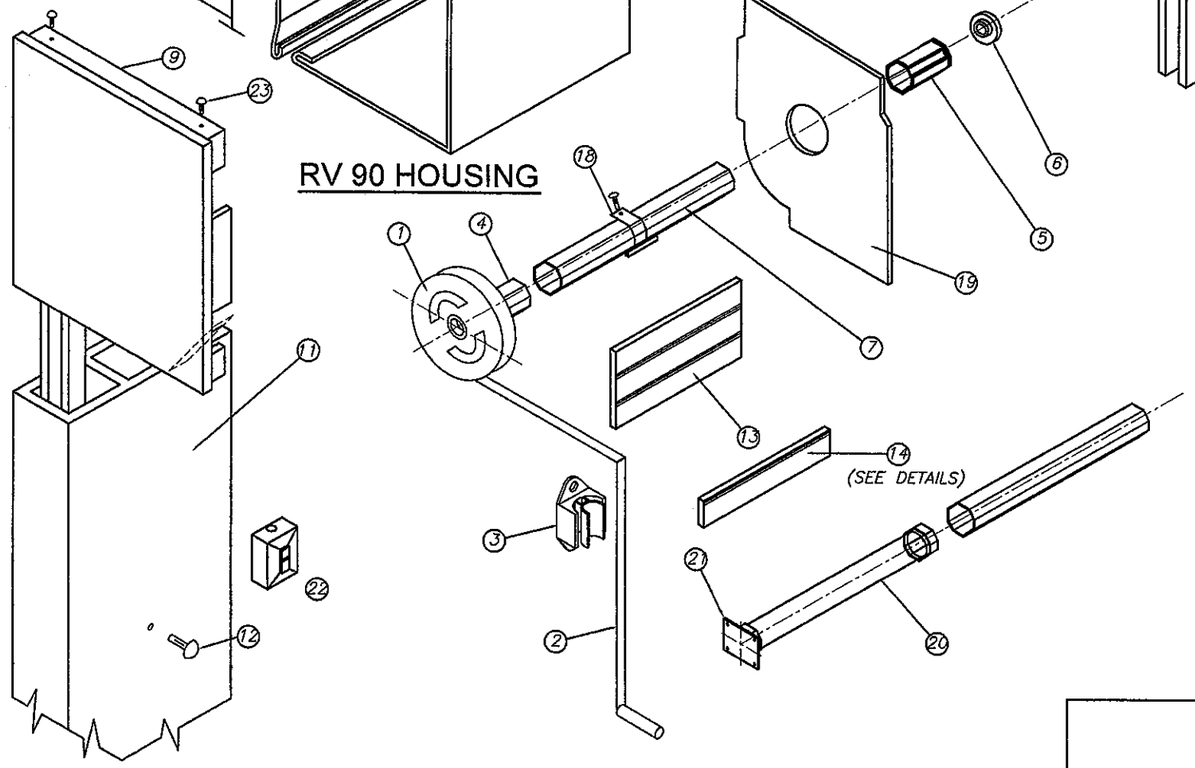

RV 90 HOUSING

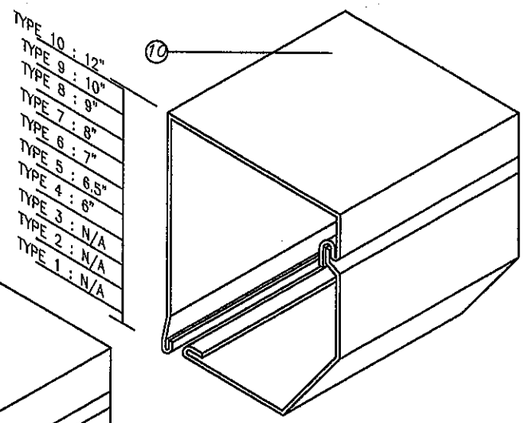

RV 45 & RV 45/S HOUSINGS

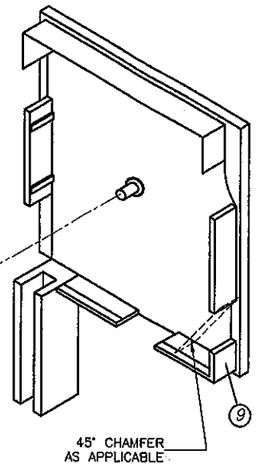

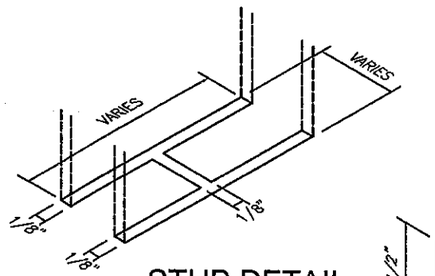

STUB DETAIL
(N. T. S.)

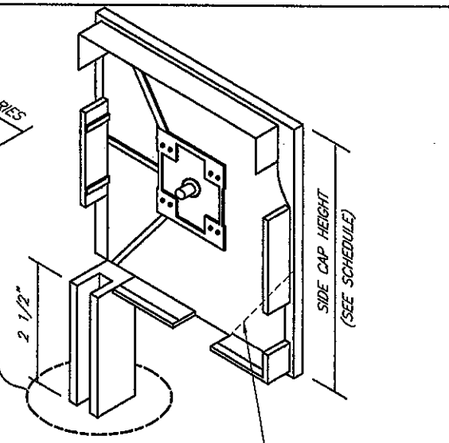

(H1) SIDE CAPS:

(H) BOX COMPONENTS AND ASSEMBLY DETAIL END CAP SYSTEM

(SEE NOTE 9 ON SHEET 1)

COMPONENTS FOR GEAR OPERATED SYSTEM

(1) – GEAR
(2) – UNIVERSAL & CRANK
(3) – CRANK HOLDER(OPTIONAL)
(4) – GEAR INSERT(GEAR TO AXLE CONNECTOR)
(5) – IDLER INSERT
(6) – BALL BEARING
(7) – OCTAGONAL AXLE *
(9) – SIDE/END CAP *
(10) – HOUSING(FRONT & BOTTOM), 0.040" THICK
(11) – SIDE RAIL
(12) – PLUG–BUTTOMS
(13) – ALUMINUM SLATS
(14) – BASE SLAT
(15) – PLASTIC STOPS(OPTIONAL)
(16) – SIDE LOCKS(OPTIONAL)
(17) – STAPLES(OPTIONAL)
(18) – SPRINGLOCK HANGER
(19) – SAFETY PLATES

ADDITIONAL COMPONENTS FOR MOTORIZED OPERATED SYSTEM

(20) – TUBULAR MOTOR
(21) – MOTOR BRACKET
(22) – SWITCH

FASTENERS

(23) – 3/16" ALUMINUM POP RIVETS(6 REQ'D EA. SIDE CAP) : 2 @ TOP, 2 @ REAR, 2@ BOTTOM

* SHALL BE CAPABLE TO SUSTAIN SLAT'S WEIGHT AND ASSURE LIFTING MECHANISM (SEE NOTE 9/1)

PRODUCT REVISED
as complying with the Florida Building Code
Acceptance No 12-0315.13
Expiration Date 07/15/2014
By _____
Miami Dade Product Control

FLORIDA BUILDING CODE. (High Velocity Hurricane Zone)

MIAMI–DADE COUNTY

WALTER A. TILLIT JR. LICENSE No 44167 STATE OF FLORIDA PROFESSIONAL ENGINEER
SEAL/SIGNATURE/DATE

©2012 TILTECO INC.

TILTECO INC.
TILLIT TESTING & ENGINEERING COMPANY
355 N.W. 36th. St., Ste. 305 – VIRGINIA GARDENS, FL. 33166
Phone : (305) 871–1530 , Fax : (305) 871–1531
e–mail: tilteco@aol.com
EB–0006719
WALTER A. TILLIT Jr., P.E.
FLORIDA Lic. # 44167

RLL 55-X SLAT END RETENTION
ROLL-UP HURRICANE ABATEMENT

I.A./R.E./A.G. DRAWN BY

ROLLAC SHUTTER OF TEXAS, INC.
5331 ORANGE STREET
PEARLAND, TX. 77581
PH:(281) 485-1011, FAX:(281) 485-0839

02/17/12 DATE

12–041 DRAWING N°

REV N°	DESCRIPTION	DATE	REV N°	DESCRIPTION	DATE
1	OLD 09–004	02/17/12	3		
2			4		

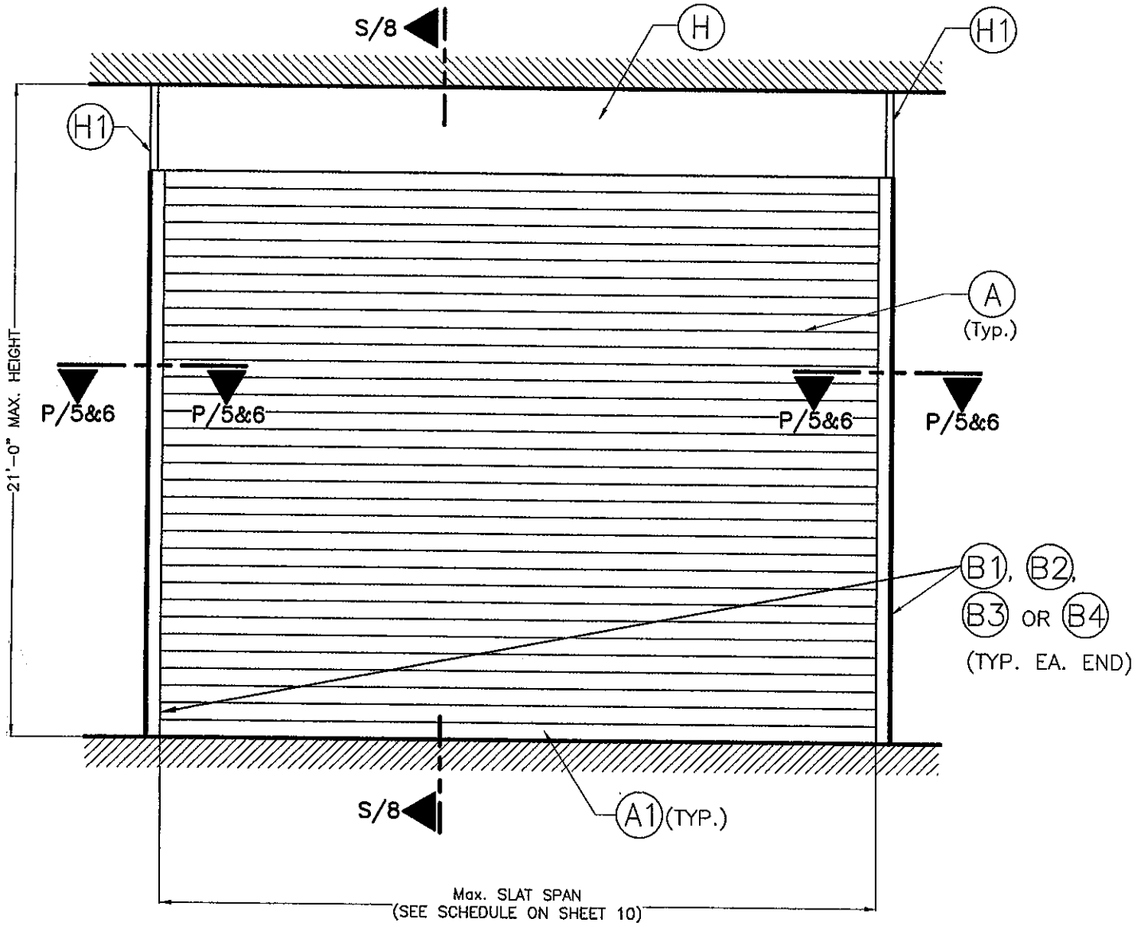

TYPICAL SINGLE UNIT ELEVATION: INSTALLATION INTO POURED CONCRETE, GROUT FILLED CELL CONCRETE BLOCK & WOOD

NOTES: SEE SHEETS 2 & 3 FOR COMPONENTS NOMENCLATURE.
N.T.S

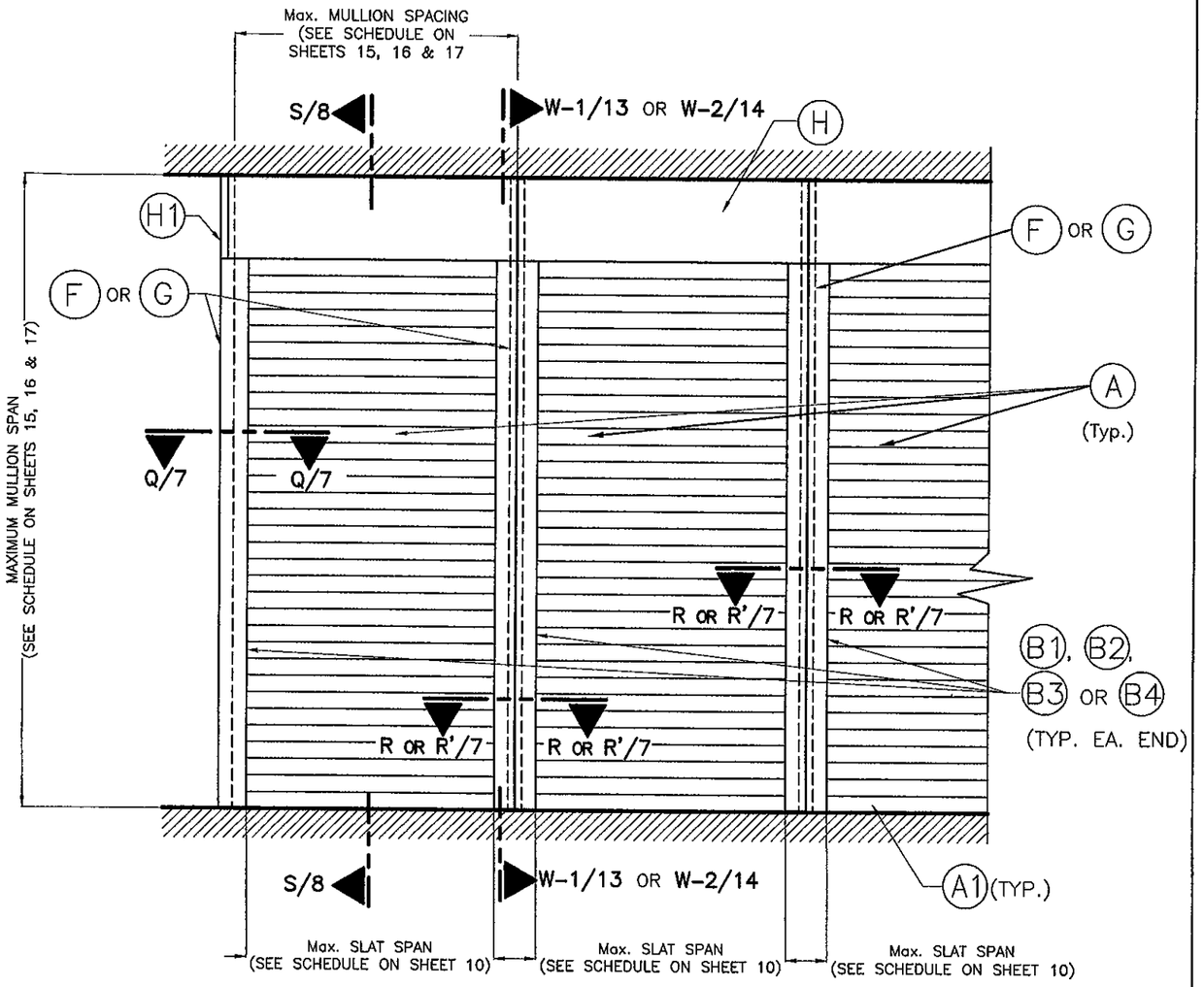

TYPICAL CONSECUTIVE SINGLE UNIT ELEVATION W/ MULLIONS: INSTALLATION INTO POURED CONCRETE

NOTES: SEE SHEETS 2 & 3 FOR COMPONENTS NOMENCLATURE.
N.T.S

PRODUCT REVISED
as complying with the Florida Building Code
Acceptance No 12-0315.13
Expiration Date 07/15/2014
By
Miami Dade Product Control

MIAMI-DADE COUNTY

WALTER A. TILLIT JR. LICENSE No. 44167 STATE OF FLORIDA PROFESSIONAL ENGINEER
P.E. SEAL/SIGNATURE/DATE

©2012 TILTECO INC.

TILTECO INC.
TILLIT TESTING & ENGINEERING COMPANY
6595 N.W. 36th. St., Ste. 305 – VIRGINIA GARDENS, Fl. 33166
Phone : (305) 871-1530 ; Fax : (305) 871-1531
e-mail: tilteco@aol.com
EB-0006719
WALTER A. TILLIT Jr., P.E.
FLORIDA Lic. # 44167

FLORIDA BUILDING CODE. (High Velocity Hurricane Zone)

RLL 55-X SLAT END RETENTION
ROLL-UP HURRICANE ABATEMENT

ROLLAC SHUTTER OF TEXAS, INC.
5331 ORANGE STREET
PEARLAND, TX. 77581
PH:(281) 485-1911, FAX:(281) 485-0839

REV Nº	DESCRIPTION	DATE	REV Nº	DESCRIPTION	DATE
1	OLD 09-004	02/17/12	3		
2			4		

I.A./R.E./A.G.
DRAWN BY

02/17/12
DATE

12-041
DRAWING Nº

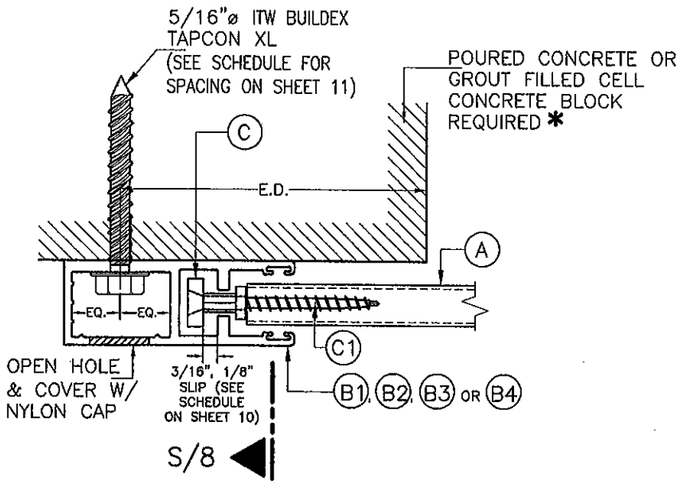

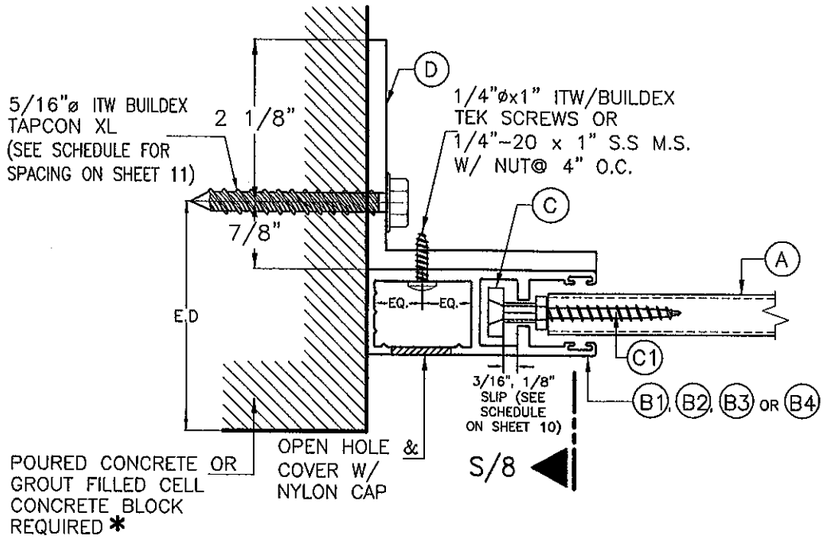

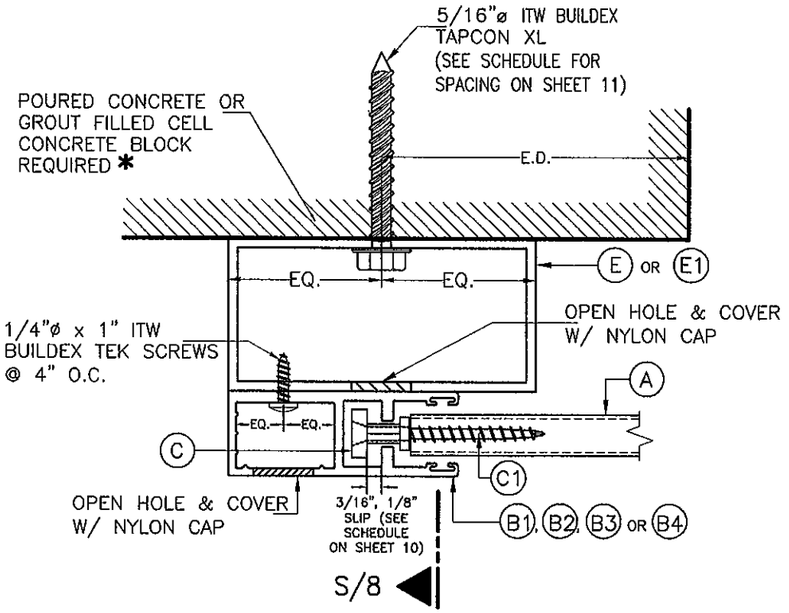

SECTION P-P (1):
WALL MOUNT

SECTION P-P (2):
INSIDE WALL MOUNT

SECTION P-P (3):
BUILD-OUT MOUNT

SIDE RAIL CONNECTIONS TO POURED CONCRETE OR GROUT FILLED CELL CONCRETE BLOCK

SCALE: 1/2" = 1"

PRODUCT REVISED
as complying with the Florida
Building Code
Acceptance No. 12-0315.13
Expiration Date 2/15/2014
By
Miami Dade Product Control

MIAMI-DADE COUNTY

WALTER A. TILLIT JR. LICENSE No. 44167 STATE OF FLORIDA PROFESSIONAL ENGINEER

P.E. SIGNATURE/DATE

©2012 TILTECO INC.

TILTECO INC.
TILLIT TESTING & ENGINEERING COMPANY
9555 N.W. 36th. St., Ste. 305 - VIRGINIA GARDENS, Fl. 33166
Phone : (305) 871-1530 , Fax : (305) 871-1531
e-mail: tilteco@aol.com
EB-0006719
WALTER A. TILLIT Jr., P.E.
FLORIDA Lic. # 44167

FLORIDA BUILDING CODE. (High Velocity Hurricane Zone)

RLL 55-X SLAT END RETENTION
ROLL-UP HURRICANE ABATEMENT

I.A./R.E./A.G.
DRAWN BY

ROLLAC SHUTTER OF TEXAS, INC.
5331 ORANGE STREET
PEARLAND, TX. 77581
PH:(281) 485-1911, FAX:(281) 485-0839

02/17/12
DATE

12-041
DRAWING N°

REV N°	DESCRIPTION	DATE	REV N°	DESCRIPTION	DATE
1	OLD 09-004	02/17/12	3		
2			4		

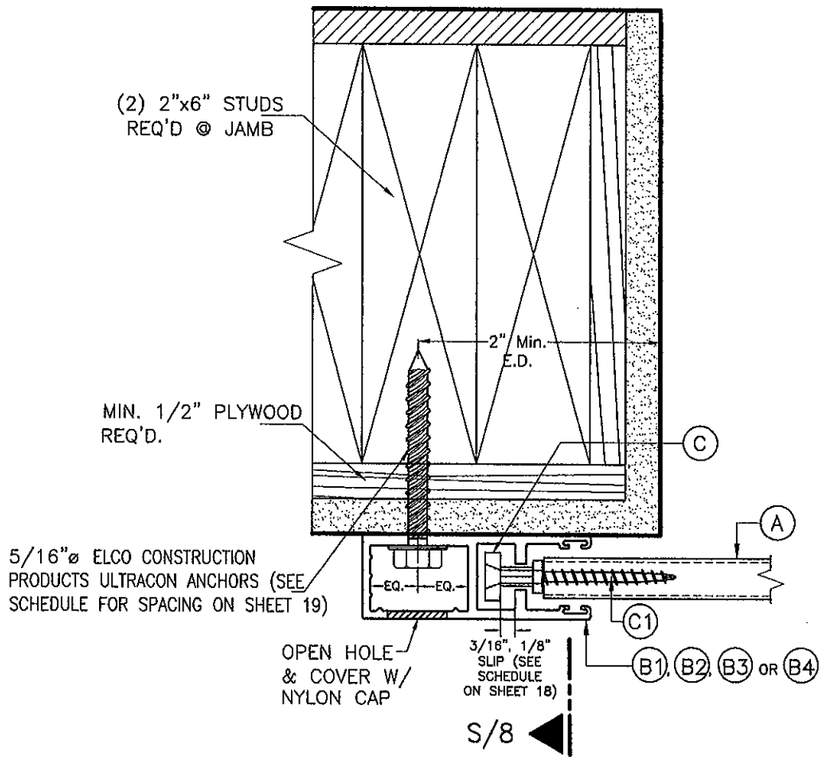

SECTION P–P (1):
WALL MOUNT

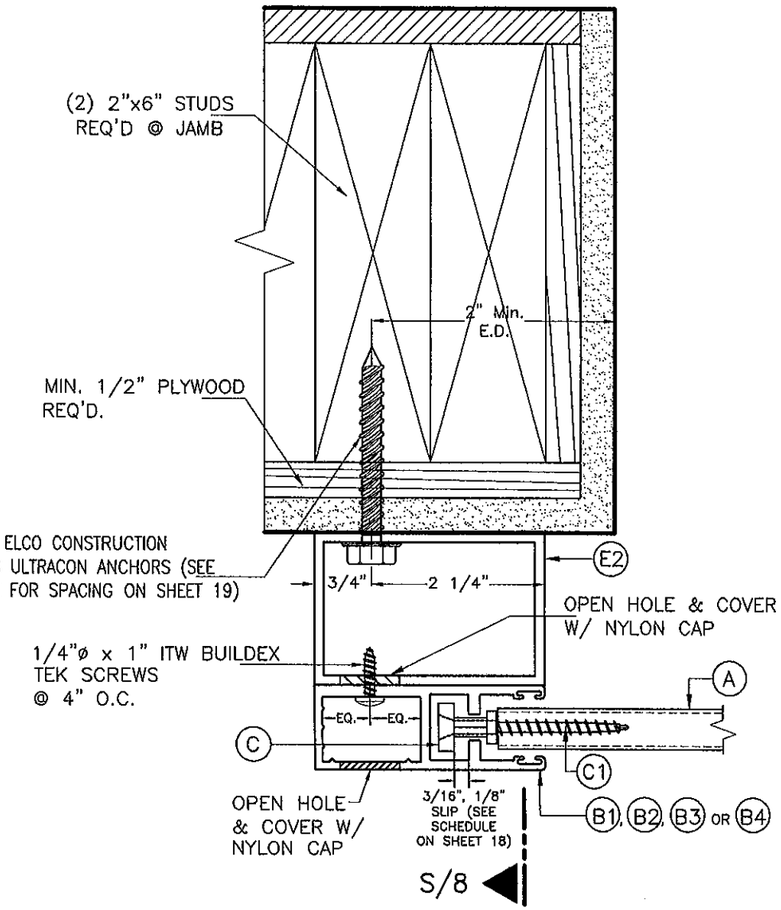

SECTION P–P (2):
BUILD–OUT MOUNT

SIDE RAIL CONNECTIONS TO WOOD WALL

SCALE: 1/2" = 1"

FLORIDA BUILDING CODE. (High Velocity Hurricane Zone)

PRODUCT REVISED
as complying with the Florida Building Code
Acceptance No 12-0315.13
Expiration Date 07/15/2014
By
Miami Dade Product Control

MIAMI–DADE COUNTY

WALTER A. TILLIT JR. LICENSE No. 44167 STATE OF FLORIDA PROFESSIONAL ENGINEER

P.E. SEAL/SIGNATURE/DATE

©2012 TILTECO INC.

TILTECO INC.
TILLIT TESTING & ENGINEERING COMPANY
8355 N.W. 36th. St., Ste. 305 – VIRGINIA GARDENS, Fl. 33166
Phone : (305) 871–1530 , Fax : (305) 871–1531
e–mail: tilteco@aol.com
EB–0006719
WALTER A. TILLIT Jr., P.E.
FLORIDA Llc. # 44167

RLL 55-X SLAT END RETENTION
ROLL-UP HURRICANE ABATEMENT

I.A./R.E./A.G. DRAWN BY

ROLLAC SHUTTER OF TEXAS, INC.

5331 ORANGE STREET
PEARLAND, TX. 77581
PH:(281) 485-1911, FAX:(281) 485-0839

02/17/12 DATE

12–041 DRAWING N°

REV N°	DESCRIPTION	DATE	REV N°	DESCRIPTION	DATE
1	OLD 09–004	02/17/12	3		
2			4		

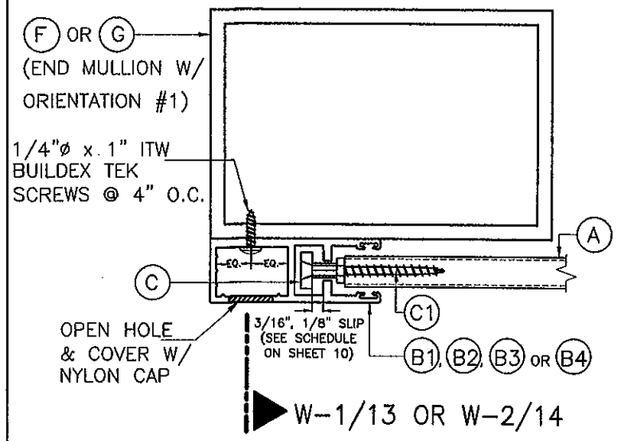

SECTION Q-Q:
MULLION MOUNT (FACE MOUNT)

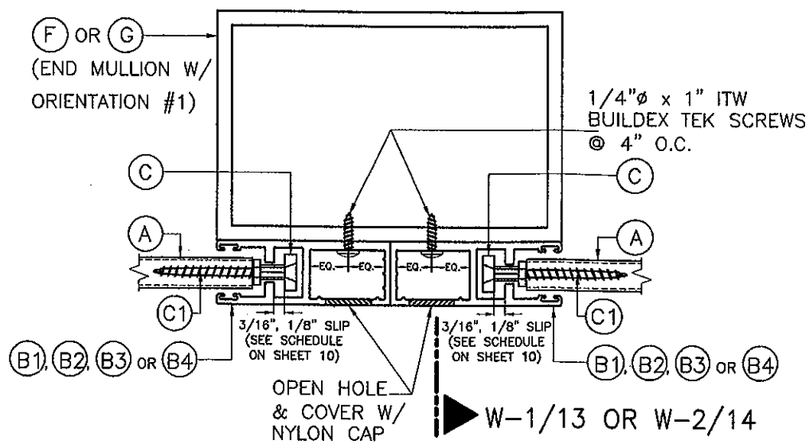

SECTION R-R:
MULLION MOUNT (FACE MOUNT)

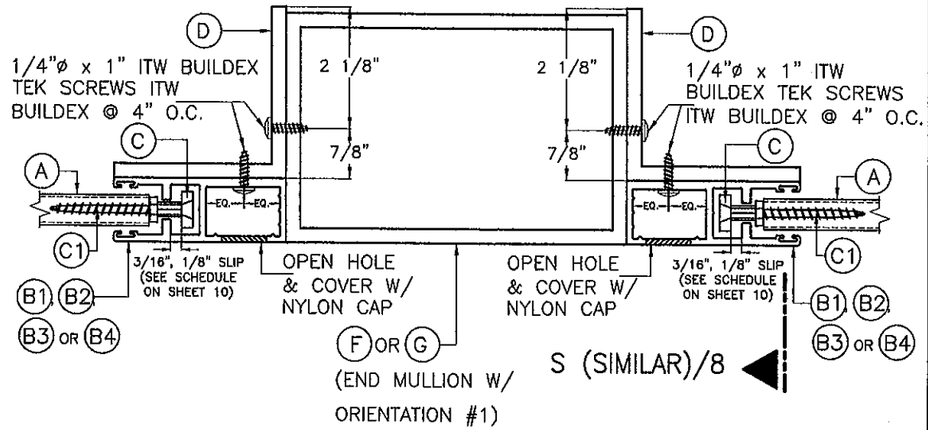

SECTION R'-R':
MULLION MOUNT (INSIDE MOUNT)

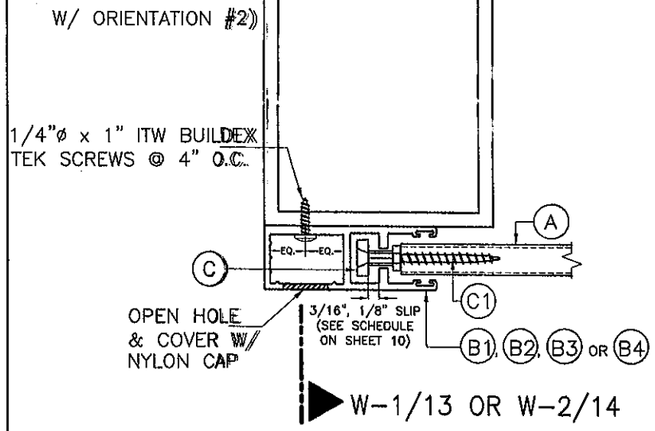

SECTION Q-Q:
MULLION MOUNT (FACE MOUNT)

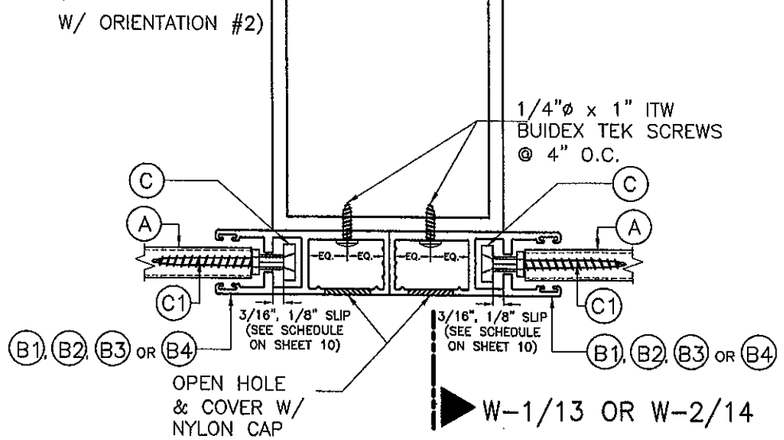

SECTION R-R:
MULLION MOUNT (FACE MOUNT)

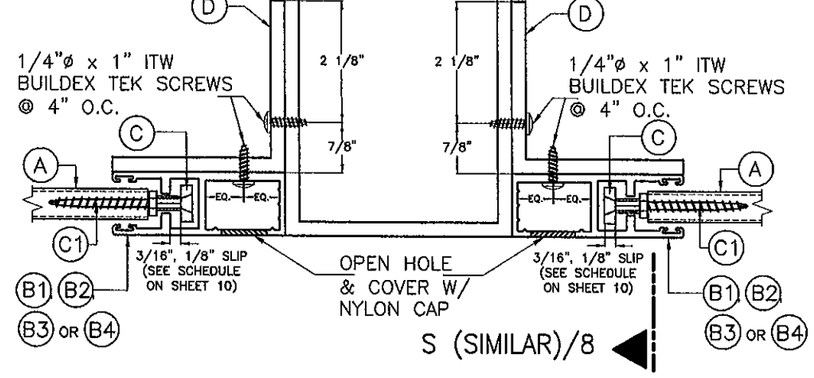

SECTION R'-R':
MULLION MOUNT (INSIDE MOUNT)

SIDE RAIL CONNECTION TO MULLIONS

SCALE: 3/8" = 1"

PRODUCT REVISED
as complying with the Florida Building Code
Acceptance No 12-0315.13
Expiration Date 07/15/2014
By _____
Miami Dade Product Control

MIAMI-DADE COUNTY

WALTER A. TILLIT JR. LICENSE No. 44167 STATE OF FLORIDA PROFESSIONAL ENGINEER
P.E. SEAL/SIGNATURE/DATE

©2012 TILTECO INC.

TILTECO INC.
TILLIT TESTING & ENGINEERING COMPANY
16559 N.W. 36th. St., Ste. 305 – VIRGINIA GARDENS, Fl. 33166
Phone : (305) 871-1530 , Fax : (305) 871-1531
e-mail: tilteco@aol.com
EB-0006719
WALTER A. TILLIT Jr., P.E.
FLORIDA Lic. # 44167

FLORIDA BUILDING CODE. (High Velocity Hurricane Zone)

RLL 55-X SLAT END RETENTION
ROLL-UP HURRICANE ABATEMENT

I.A./R.E./A.G. DRAWN BY

ROLLAC SHUTTER OF TEXAS, INC.
5331 ORANGE STREET
PEARLAND, TX. 77581
PH:(281) 485-1911, FAX:(281) 485-0839

02/17/12 DATE

12-041 DRAWING N°

REV N°	DESCRIPTION	DATE	REV N°	DESCRIPTION	DATE
1	OLD 09-004	02/17/12	3		
2			4		

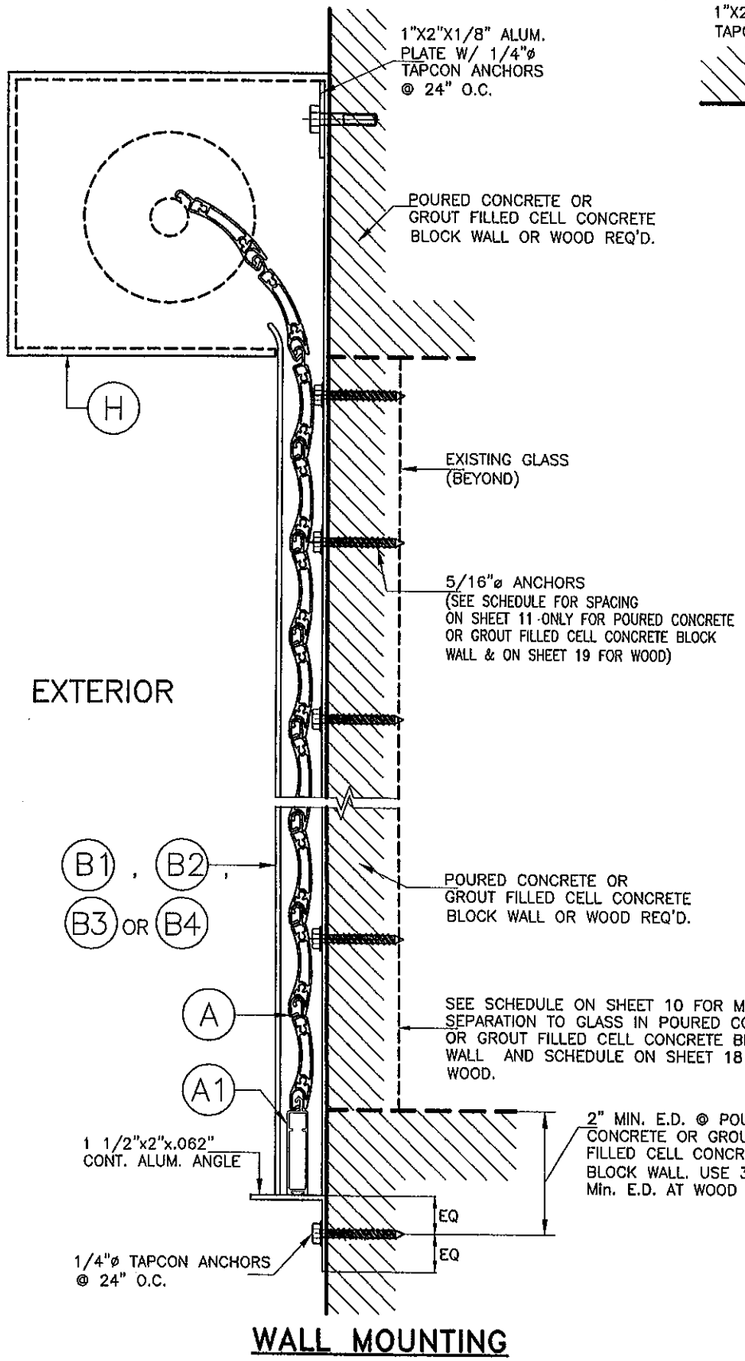

WALL MOUNTING

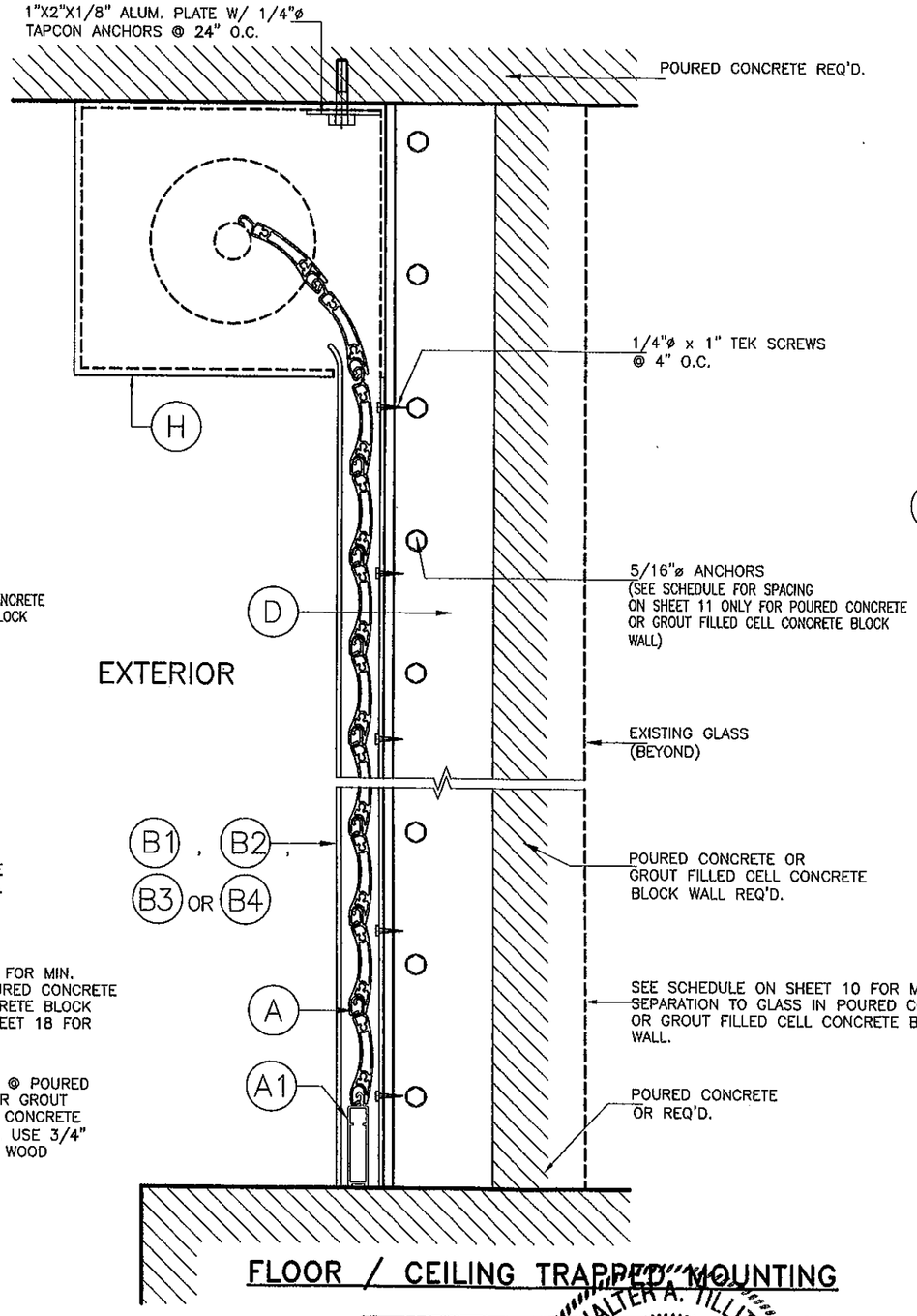

FLOOR / CEILING TRAPPED MOUNTING

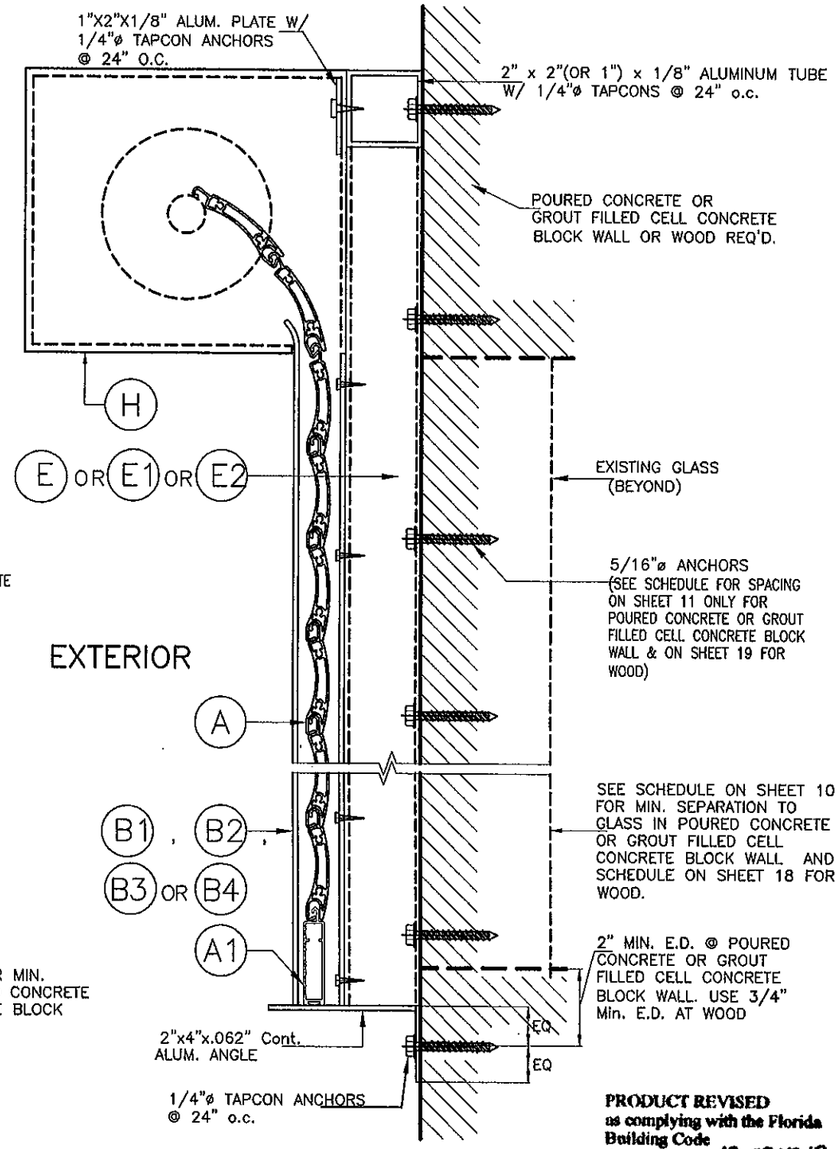

BUILD-OUT MOUNTING

PRODUCT REVISED
as complying with the Florida Building Code
Acceptance No 12-0315.13
Expiration Date 07/15/2014
By
Miami Dade Product Control

SECTION S-S

N.T.S

INSTALLATION DETAILS ON EXISTING POURED CONCRETE OR GROUT FILLED CELL CONCRETE BLOCK WALL OR WOOD

FLORIDA BUILDING CODE. (High Velocity Hurricane Zone)

WALTER A. TILLIT JR. LICENSE No. 44167 STATE OF FLORIDA PROFESSIONAL ENGINEER

MIAMI-DADE COUNTY — SIGNATURE/SEAL/DATE

©2012 TILTECO INC.

TILTECO INC.
TILLIT TESTING & ENGINEERING COMPANY
6355 N.W. 36th. St., Ste. 305 – VIRGINIA GARDENS, Fl. 33166
Phone : (305) 871-1530 , Fax : (305) 871-1531
e-mail: tilteco@aol.com
EB-0006719
WALTER A. TILLIT Jr., P.E.
FLORIDA Lic. # 44167

RLL 55-X SLAT END RETENTION ROLL-UP HURRICANE ABATEMENT

I.A./R.E./A.G. DRAWN BY

ROLLAC SHUTTER OF TEXAS, INC.
5331 ORANGE STREET
PEARLAND, TX. 77581
PH:(281) 485-1911, FAX:(281) 486-0839

02/17/12 DATE

12-041 DRAWING N°

REV N°	DESCRIPTION	DATE	REV N°	DESCRIPTION	DATE
1	OLD 09-004	02/17/12	3		
2			4		

TYPICAL MANDATORY PROCEDURE FOR VERIFYING PRODUCT'S CODE COMPLIANCE RELATED TO ITS INSTALLATION INTO EXISTING POURED CONCRETE OR GROUT FILLED CELL CONCRETE BLOCK STRUCTURES (*)

STEP 1:

OBTAIN JOB SITE'S A.S.D. DESIGN LOAD (p.s.f.) FOR THE OPENING AND DESIRED PRODUCT SPAN "L" (ft) TO PROTECT IT (SEE GENERAL NOTE #1, ON SHEET 1).

STEP 2:

ENTER TO CHARTS I THRU III ON SHEET 10 TO DETERMINE, BASED ON AN ASSUMED SLAT SLIP (in); A.S.D. DESIGN LOAD (p.s.f.); AND PRODUCT SPAN "L" (ft) ; THE REQUIRED FINAL SLAT SLIP THAT SLATS MUST BE INSTALLED WITH TO MEET THE REQUIRED A.S.D. LOAD AND DESIRED PRODUCT SPAN.

THE FOLLOWING INFORMATION IS PROVIDED AT CHARTS I THRU III TO PROCEED WITH PRODUCT INSTALLATION VERIFICATION:

- ENTER A.S.D. DESIGN LOAD: SEE STEP (1) ABOVE.
- FOR A SPECIFIC PRODUCT MOUNTING INSTALLATION TYPE, THE FOLLOWING DEFINITIONS FOR SLAT SPAN SHALL BE CONSIDERED:

LMAX: THIS IS THE MAXIMUM ALLOWABLE PRODUCT SPAN FOR WHICH A GIVEN SLAT SLIP (3/16", 1/8" OR LESS THAN 1/8") MAY BE USED, FOR A GIVEN A.S.D. DESIGN LOAD.

LMIN: THIS IS THE MINIMUM ALLOWABLE PRODUCT SPAN FOR WHICH A GIVEN SLIP (3/16", 1/8" OR LESS THAN 1/8") MAY BE USED, FOR A GIVEN A.S.D. DESIGN LOAD. IN CASE JOB SITE DESIRED PRODUCT SPAN (L) WAS SHORTER THAN LMIN, THEN GO TO THE OTHER CHARTS WITH A SHORTER SLAT SLIP AND VERIFY THAT (L) IS ALLOWED FOR THAT OTHER SHORTER SLIP.

- MINIMUM REQUIRED SEPARATION TO GLASS IS PROVIDED ON CHARTS I, II & III: PROVIDES SEPARATION TO GLASS FOR PRODUCTS WITH OR WITHOUT MULLIONS.

STEP 3:

OBTAIN INFORMATION ON PRODUCT'S SIDE RAIL ANCHOR SPACING REQUIREMENTS FOR CONNECTION TO EXISTING STRUCTURE FROM ANCHOR SCHEDULE IV ON SHEET 11. ENTER SCHEDULE WITH FINALLY DETERMINED SUBSTRATE, MOUNTING TYPE, A.S.D. DESIGN LOAD & PRODUCT SPAN AND OBTAIN MAXIMUM ANCHOR SPACING (INCHES ON CENTERS). SEE GENERAL NOTE 6 ON SHEET 1 FOR ANCHOR SPECS.

STEP 4:

IF PRODUCT INSTALLATION INCLUDES MULLIONS, THE FOLLOWING MANDATORY ADDITIONAL PROCEDURE IS APPLICABLE.

PROCEDURE 4a: IF MULLIONS ARE USED

1. MINIMUM SEPARATION TO GLASS FOR SLATS IF MULLIONS ARE USED SHALL BE BASED ON CHARTS I, II & III ON SHEET 10. IT SHALL BE MEASURED FROM BACK OF SLATS TO GLASS.
2. ENTER SCHEDULES 1a THRU 2c ON SHEETS 15, 16 & 17 W/ A.S.D. DESIGN LOAD; MAXIMUM MULLION SPACING (MAX., 12' OR 7'), AND DETERMINE MAXIMUM MULLION SPAN (HEIGHT) W/ ALLOWABLE INTERPOLATION IN BETWEEN SPACINGS FOR A GIVEN Ⓕ & Ⓖ, MULLION TYPE & MULLION ORIENTATION.
3. SEE SHEETS 13 & 14 FOR REQUIRED MULLION CONNECTION DETAILS AT TOP & BOTTOM FOR FLOOR TO CEILING (TRAPPED) OR WALL MOUNTINGS OF MULLIONS INTO CONCRETE FOR A GIVEN MULLION TYPE Ⓕ & Ⓖ.

* PROCEDURE PER STEPS 1 THRU 3 IS SIMILAR FOR INSTALLATIONS INTO WOOD FRAME STRUCTURES. SEE SHEETS 18 & 19 FOR LIMITATIONS APPLICABLE TO INSTALLATIONS INTO WOOD FRAME STRUCTURES.

FLORIDA BUILDING CODE. (High Velocity Hurricane Zone)

PRODUCT REVISED
as complying with the Florida Building Code
Acceptance No 12-0315.13
Expiration Date 07/15/2014
By
Miami Dade Product Control

MIAMI-DADE COUNTY

WALTER A. TILLIT JR. LICENSE No. 44167 STATE OF FLORIDA PROFESSIONAL ENGINEER

PE SEAL/SIGNATURE/DATE

©2012 TILTECO INC.

TILTECO INC.
TILLIT TESTING & ENGINEERING COMPANY
6955 N.W. 36th. St., Ste. 305 – VIRGINIA GARDENS, Fl. 33166
Phone : (305) 871-1530 , Fax : (305) 871-1531
e-mail: tilteco@aol.com
EB-0006719
WALTER A. TILLIT Jr., P.E.
FLORIDA Lic. # 44167

RLL 55-X SLAT END RETENTION
ROLL-UP HURRICANE ABATEMENT

ROLLAC SHUTTER OF TEXAS, INC.
5331 ORANGE STREET
PEARLAND, TX. 77581
PH:(281) 485-1911, FAX:(281) 485-0839

REV N°	DESCRIPTION	DATE	REV N°	DESCRIPTION	DATE
1	OLD 09-004	02/17/12	3		
2			4		

I.A./R.E./A.G. DRAWN BY
02/17/12 DATE
12-041 DRAWING N°

SLAT PERFORMANCE CHARTS I, II & III:

VALID FOR INSTALLATION INTO POURED CONCRETE, GROUT FILLED CELL CONCRETE BLOCK OR MULLIONS

FOR A GIVEN A.S.D. DESIGN PRESSURE RATING (p.s.f.) AND SHUTTER MOUNT CONDITION

CHART I (ONLY VALID FOR 3/16" SLIP)

MAXIMUM A.S.D. DESIGN PRESSURE RATING (p.s.f.)	MAX. SLAT SPAN: WALL MOUNT (SEE NOTES*)	MAX. SLAT SPAN: TRAPPED MOUNT (SEE NOTES*)	MAX. SLAT SPAN: BUILD-OUT MOUNT W/ (E1) (SEE NOTES*)	MAX. SLAT SPAN: BUILD-OUT MOUNT W/ (E) (SEE NOTES*)	REQUIRED MIN. SLAT SPAN: WALL TRAPPED & BUIL-OUT MOUNT W/ (E) & (E1) (SEE NOTES*)	USE MAXIMUM POSITIVE A.S.D. LOAD VALUE: MIN. SEPARATION TO GLASS (in)
	USE MAXIMUM VALUE BETWEEN POSITIVE AND NEGATIVE A.S.D. LOAD					
30.0	19'-8"	19'-8"	16'-6"	13'-11"	6'-6"	10"
35.0	18'-3"	18'-3"	14'-11"	12'-7"	6'-3"	
40.0	16'-8"	16'-8"	13'-7"	11'-6"	6'-0"	
45.0	15'-3"	15'-3"	12'-6"	10'-9"	5'-9"	
50.0	14'-3"	14'-3"	11'-8"	10'-0"	5'-7"	
55.0	13'-3"	13'-3"	11'-0"	9'-6"	5'-6"	
60.0	12'-6"	12'-6"	10'-4"	9'-0"	5'-4"	
65.0	11'-11"	11'-11"	9'-10"	8'-6"	5'-3"	8 3/4"
70.0	11'-5"	11'-5"	9'-5"	8'-2"	5'-1"	
75.0	10'-11"	10'-11"	9'-0"	7'-11"	5'-0"	
80.0	10'-5"	10'-5"	8'-8"	7'-7"	4'-11"	
85.0	10'-0"	10'-0"	8'-3"	7'-4"	4'-10"	
90.0	9'-6"	9'-6"	8'-0"	7'-1"	4'-9"	
95.0	9'-3"	9'-2"	7'-9"	6'-11"	4'-8"	
100.0	8'-11"	8'-10"	7'-6"	6'-9"	4'-7"	
105.0	8'-9"	8'-6"	7'-3"	6'-6"	4'-7"	
110.0	8'-6"	8'-3"	7'-1"	6'-5"	4'-6"	
115.0	8'-3"	8'-0"	6'-11"	6'-3"	4'-5"	
120.0	8'-0"	7'-9"	6'-9"	6'-1"	4'-5"	
125.0	7'-10"	7'-6"	6'-7"	6'-0"	4'-4"	
130.0	7'-8"	7'-5"	6'-5"	5'-10"	4'-3"	
135.0	7'-6"	7'-2"	6'-3"	5'-9"	4'-3"	
140.0	7'-3"	7'-0"	6'-2"	5'-8"	4'-2"	
145.0	7'-2"	6'-10"	6'-0"	5'-6"	4'-2"	
150.0	7'-0"	6'-8"	6'-0"	5'-5"	4'-1"	
155.0	6'-10"	6'-6"	5'-10"	5'-4"	4'-1"	
160.0	6'-9"	6'-5"	5'-9"	5'-3"	4'-1"	6 1/2"

CHART II (ONLY VALID FOR 1/8" SLIP)

MAXIMUM A.S.D. DESIGN PRESSURE RATING (p.s.f.)	MAX. SLAT SPAN: WALL MOUNT (SEE NOTES*)	MAX. SLAT SPAN: TRAPPED MOUNT (SEE NOTES*)	MAX. SLAT SPAN: BUILD-OUT MOUNT W/ (E1) (SEE NOTES*)	MAX. SLAT SPAN: BUILD-OUT MOUNT W/ (E) (SEE NOTES*)	REQUIRED MIN. SLAT SPAN: WALL TRAPPED & BUIL-OUT MOUNT W/ (E) & (E1) (SEE NOTES*)	USE MAXIMUM POSITIVE A.S.D. LOAD VALUE: MIN. SEPARATION TO GLASS (in)
	USE MAXIMUM VALUE BETWEEN POSITIVE AND NEGATIVE A.S.D. LOAD					
30.0	18'-3"	18'-3"	15'-0"	12'-7"	6'-2"	10"
35.0	16'-4"	16'-4"	13'-5"	11'-5"	5'-10"	
40.0	14'-11"	14'-11"	12'-3"	10'-5"	5'-8"	
45.0	13'-9"	13'-9"	11'-4"	9'-9"	5'-6"	
50.0	12'-9"	12'-9"	10'-7"	9'-1"	5'-4"	
55.0	12'-0"	12'-0"	9'-11"	8'-7"	5'-2"	
60.0	11'-4"	11'-4"	9'-5"	8'-2"	5'-0"	8 3/4"
65.0	10'-9"	10'-9"	8'-11"	7'-10"	4'-11"	
70.0	10'-2"	10'-2"	8'-6"	7'-6"	4'-10"	
75.0	9'-9"	9'-9"	8'-2"	7'-2"	4'-9"	
80.0	9'-4"	9'-4"	7'-10"	6'-11"	4'-8"	
85.0	9'-0"	9'-0"	7'-7"	6'-9"	4'-7"	
90.0	8'-8"	8'-8"	7'-4"	6'-6"	4'-6"	
95.0	8'-5"	8'-5"	7'-1"	6'-4"	4'-5"	
100.0	8'-2"	8'-2"	6'-10"	6'-2"	4'-4"	
105.0	7'-11"	7'-10"	6'-8"	6'-0"	4'-4"	
110.0	7'-8"	7'-8"	6'-6"	5'-10"	4'-3"	
115.0	7'-6"	7'-5"	6'-4"	5'-9"	4'-2"	
120.0	7'-3"	7'-2"	6'-2"	5'-7"	4'-2"	
125.0	7'-1"	7'-0"	6'-1"	5'-6"	4'-1"	
130.0	6'-11"	6'-10"	5'-11"	5'-5"	4'-1"	
135.0	6'-9"	6'-8"	5'-10"	5'-3"	4'-0"	6 1/2"
140.0	6'-8"	6'-6"	5'-8"	5'-2"	4'-0"	
145.0	6'-6"	6'-4"	5'-7"	5'-1"	3'-11"	
150.0	6'-5"	6'-2"	5'-6"	5'-0"	3'-11"	
155.0	6'-3"	6'-1"	5'-5"	4'-11"	3'-10"	
160.0	6'-2"	5'-11"	5'-4"	4'-10"	3'-10"	

CHART III (ONLY VALID FOR LESS THAN 1/8" SLIP)

MAXIMUM A.S.D. DESIGN PRESSURE RATING (p.s.f.)	MAX. SLAT SPAN $L_{MAX.}$ (ft): WALL TRAPPED & BUIL-OUT MOUNT W/ (E) & (E1) (SEE NOTES*)	REQUIRED MIN. SLAT SPAN $L_{MIN.}$ (ft): WALL TRAPPED & BUIL-OUT MOUNT W/ (E) & (E1) (SEE NOTES*)	USE MAXIMUM POSITIVE A.S.D. LOAD VALUE: MIN. SEPARATION TO GLASS (in)
	USE MAXIMUM VALUE BETWEEN POSITIVE AND NEGATIVE A.S.D. LOAD		
30.0	6'-0"	0'-0"	6 1/2"
35.0	5'-9"	0'-0"	
40.0	5'-5"	0'-0"	
45.0	5'-1"	0'-0"	
50.0	4'-10"	0'-0"	
55.0	4'-7"	0'-0"	
60.0	4'-5"	0'-0"	
65.0	4'-3"	0'-0"	
70.0	4'-1"	0'-0"	
75.0	3'-11"	0'-0"	
80.0	3'-10"	0'-0"	
85.0	3'-8"	0'-0"	
90.0	3'-7"	0'-0"	
95.0	3'-6"	0'-0"	
100.0	3'-5"	0'-0"	
105.0	3'-4"	0'-0"	
110.0	3'-3"	0'-0"	
115.0	3'-2"	0'-0"	
120.0	3'-1"	0'-0"	
125.0	3'-1"	0'-0"	
130.0	3'-0"	0'-0"	
135.0	2'-11"	0'-0"	
140.0	2'-11"	0'-0"	
145.0	2'-10"	0'-0"	
150.0	2'-9"	0'-0"	
155.0	2'-9"	0'-0"	
160.0	2'-8"	0'-0"	

* NOTES:

1. ABOVE INDICATED MAX. SLAT SPANS MAY BE USED AS LONG AS ANCHOR SPACING SCHEDULES ON SHEET 11 INDICATE THAT A SPACING IS AVAILABLE FOR THE CORRESPONDING SLAT SPAN AND A.S.D. DESIGN PRESSURE RATING.
2. REQUIRES SIDE RAILS FASTENED TO EXISTING STRUCTURE WITH 5/16"ø ITW BUILDEX TAPCON XL INTO POURED CONCRETE OR GROUT FILLED CELL CONCRETE BLOCK OR 1/4"ø TEK SCREWS AT MULLIONS CONNECTION VALID FOR WALL MOUNTED, INSIDE MOUNTED, AND BUILD-OUT MOUNTED.
3. MAXIMUM SLAT SPANS FOR INTERMEDIATE LOADS MAY BE DETERMINED BY LINEAR INTERPOLATION BETWEEN END VALUES.

PRODUCT REVISED
as complying with the Florida Building Code
Aceeptance No 12-0315.13
Expiration Date 02/15/2014
By
Miami Dade Product Control

FLORIDA BUILDING CODE. (High Velocity Hurricane Zone)

MIAMI-DADE COUNTY

WALTER A. TILLIT JR. LICENSE No. 44167 STATE OF FLORIDA PROFESSIONAL ENGINEER

KEY SEAL/SIGNATURE/DATE

©2012 TILTECO INC.

TILTECO INC.
TILLIT TESTING & ENGINEERING COMPANY
6305 N.W. 36th. St., Ste. 305 – VIRGINIA GARDENS, FL. 33166
Phone : (305) 871-1530 , Fax : (305) 871-1531
e-mail: tilteco@aol.com
EB-0006719
WALTER A. TILLIT Jr., P.E.
FLORIDA Lic. # 44167

RLL 55-X SLAT END RETENTION
ROLL-UP HURRICANE ABATEMENT

I.A./R.E./A.G. DRAWN BY

ROLLAC SHUTTER OF TEXAS, INC.
5331 ORANGE STREET
PEARLAND, TX. 77581
PH:(281) 485-1911, FAX:(281) 485-0839

02/17/12 DATE

12-041 DRAWING N°

REV N°	DESCRIPTION	DATE	REV N°	DESCRIPTION	DATE
1	OLD 09-004	02/17/12	3		
2			4		

MAX. ANCHOR'S SPACING SCHEDULE IV FOR A GIVEN PRODUCT MOUNTING TYPE W/ ø 5/16" ITW BUILDEX TAPCON XL ANCHORS TO POURED CONCRETE WALL OR GROUT FILLED CELL CONCRETE BLOCK WALL. ♠

A.S.D. DESIGN PRESSURE RATING & SLAT SPAN RANGE

WALL MOUNT

MAX. A.S.D. DESIGN PRESSURE RATING RANGE	SLAT SPAN RANGE							
	0' to 4'	> 4' to 5'	> 5' to 6'	> 6' to 7'	> 7' to 9'	> 9' to 12'	> 12' to 16'	> 16' to 19'-8"
≤ 30.0	6.0"	6.0"	6.0"	8"	8"	7"	4 1/2"	4"
>31–40	6.0"	6.0"	6.0"	8"	8"	5"	4"	3 3/4"
>41–60	6.0"	6.0"	6.0"	8"	5 1/2"	4"	4"	—
>61–80	6.0"	6.0"	6.0"	6"	4"	3 3/4"	—	—
>81–105	6.0"	6.0"	6.0"	4 1/2"	3 3/4"	3 3/4"	—	—
>106–120	6.0"	6.0"	5 1/2"	4"	3 3/4"	—	—	—
>121–140	6.0"	6.0"	4 1/2"	3 3/4"	3 3/4"	—	—	—
>141–160	6.0"	6.0"	4"	3 3/4"	3 3/4"	—	—	—

TRAPPED MOUNT

MAX. A.S.D. DESIGN PRESSURE RATING RANGE	SLAT SPAN RANGE							
	0' to 4'	> 4' to 5'	> 5' to 6'	> 6' to 7'	> 7' to 9'	> 9' to 12'	> 12' to 16'	> 16' to 19'-8"
≤ 30.0	6"	6"	6"	8"	8"	6 1/2"	4 1/2"	4"
>31–40	6"	6"	6"	8"	7 1/2"	5"	4"	4"
>41–60	6"	6"	6"	7 1/2"	5"	3 3/4"	3 3/4"	—
>61–80	6"	6"	6"	5 1/2"	4"	3 3/4"	—	—
>81–105	6"	6"	6"	4"	3 3/4"	3 3/4"	—	—
>106–120	6"	6"	5 1/2"	4"	3 3/4"	—	—	—
>121–140	6"	6"	1/2"	3 3/4"	3 3/4"	—	—	—
>141–160	6"	6"	4"	3 3/4"	—	—	—	—

4" x 2" OR 4" x 1" BUILD-OUT MOUNT

4"x2" (E) / 4"x1" (E1)

MAX. A.S.D. DESIGN PRESSURE RATING RANGE	SLAT SPAN RANGE							
	0' to 4'	> 4' to 5'	> 5' to 6'	> 6' to 7'	> 7' to 9'	> 9' to 12'	> 12' to 16'	> 16' to 19'-8"
≤ 30.0	6" / 6"	6" / 6"	6" / 6"	8" / 8"	7" / 8"	4" / 5	3 3/4" / 3 3/4"	— / 3 3/4"
>31–40	6" / 6"	6" / 6"	6" / 6"	8" / 8"	5" / 6"	3 3/4" / 3 3/4"	3 3/4" / 3 3/4"	— / —
>41–60	6" / 6"	6" / 6"	6" / 6"	5" / 6 1/2"	3 3/4" / 4"	3 3/4" / 3 3/4"	— / 3 3/4"	— / —
>61–80	6" / 6"	6" / 6"	5 1/2" / 6"	3 3/4" / 4 1/2"	3 3/4" / 3 3/4"	— / 3 3/4"	— / —	— / —
>81–105	6" / 6"	6" / 6"	3 3/4" / 4 1/2"	3 3/4" / 3 3/4"	3 3/4" / 3 3/4"	— / —	— / —	— / —
>106–120	6" / 6"	6" / 6"	3 3/4" / 4"	3 3/4" / 3 3/4"	— / 3 3/4"	— / —	— / —	— / —
>121–140	6" / 6"	6" / 6"	3 3/4" / 3 3/4"	3 3/4" / 3 3/4"	— / —	— / —	— / —	— / —
>141–160	6" / 6"	6" / 6"	3 3/4" / 3 3/4"	— / 3 3/4"	— / —	— / —	— / —	— / —

SLAT SPAN DEFINITION

♠ NOTE:

MAX. SPAN FOR SLAT FOR A GIVEN A.S.D. DESIGN PRESSURE RATING SHALL NEVER EXCEED MAX. SLAT SPAN INDICATED ON SLAT PERFORMANCE CHART ON SHEET 10.

PRODUCT REVISED
as complying with the Florida Building Code
Acceptance No 12-0315.13
Expiration Date 07/15/2014
By _____
Miami-Dade Product Control

WALTER A. TILLIT JR. LICENSE No. 44167 STATE OF FLORIDA PROFESSIONAL ENGINEER

MIAMI-DADE COUNTY

P.E. SEAL/SIGNATURE/DATE

FLORIDA BUILDING CODE. (High Velocity Hurricane Zone)

©2012 TILTECO INC.

TILTECO INC.
TILLIT TESTING & ENGINEERING COMPANY
6955 N.W. 36th. St., Ste. 305 – VIRGINIA GARDENS, Fl. 33166
Phone : (305) 871-1530 , Fax : (305) 871-1531
e-mail: tilteco@aol.com
EB-0006719
WALTER A. TILLIT Jr., P.E.
FLORIDA Lic. # 44167

RLL 55-X SLAT END RETENTION
ROLL-UP HURRICANE ABATEMENT

ROLLAC SHUTTER OF TEXAS, INC.
5331 ORANGE STREET
PEARLAND, TX. 77581
PH:(281) 485-1911, FAX:(281) 485-0839

I.A./R.E./A.G. DRAWN BY

02/17/12 DATE

12-041 DRAWING N°

REV N°	DESCRIPTION	DATE	REV N°	DESCRIPTION	DATE
1	OLD 09-004	02/17/12	3		
2			4		

SCHEDULE V:

Vx FORCES (Lb/ft) & **Vy** FORCES (Lb/ft) ACTING AT JAMBS FOR AN A.S.D. DESIGN PRESSURE RATING RANGE SLAT SPAN RANGE FOR POURED CONCRETE OR GROUT FILLED CELL CONCRETE BLOCK WALL BUILDINGS *

(USE MAXIMUM VALUE BETWEEN POSITIVE AND NEGATIVE A.S.D. LOAD)

MAX. A.S.D. DESIGN PRESSURE RATING RANGE	SLAT SPAN RANGE															
	0' to 4'		>4' to 5'		> 5' to 6'		> 6' to 7'		> 7' to 9'		> 9' to 12'		> 12' to 16'		>16' to 19'-8"	
	Vx	Vy	Vx	Vy	Vx	Vy	Vx	Vy	Vx	Vy	Vx	Vy	Vx	Vy	Vx	Vy
≤ 30.0	10	60	10	75	191	90	141	105	528	135	979	180	1523	240	2011	295
>31–40	10	80	10	100	20	120	319	140	764	180	1314	240	1994	320	2106	333
>41–60	10	120	10	150	312	180	658	210	1219	270	1955	360	2073	375	–	–
>61–80	10	153	26	197	585	240	983	280	1656	360	2094	417	–	–	–	–
>81–105	10	175	58	241	914	315	1375	368	2088	459	2088	425	–	–	–	–
>106–120	10	185	67	265	1106	360	1605	420	2061	480	–	–	–	–	–	–
>121–140	10	204	67	292	1358	420	1907	490	2036	508	–	–	–	–	–	–
>141–160	10	213	96	327	1606	480	2059	540	2055	525	–	–	–	–	–	–

***NOTE:**

IT SHALL BE THE RESPONSIBILITY OF THE CONTRACTOR OR PERMIT HOLDER TO VERIFY THAT EXISTING STRUCTURE IS DESIGNED TO SUPPORT **Vx** AND **Vy** FORCES IN POUNDS PER UNIT FOOT OF PRODUCT HEIGHT AT BOTH JAMBS.
SEE THIS SHEET FOR **Vx** & **Vy** VALUES.

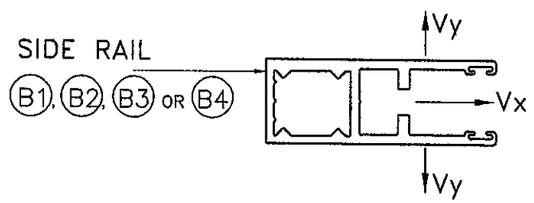

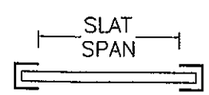

SLAT SPAN DEFINITION

PRODUCT REVISED
as complying with the Florida Building Code
Acceptance No 12-0315.13
Expiration Date 07/15/2014
By
Miami Dade Product Control

FLORIDA BUILDING CODE. (High Velocity Hurricane Zone)

WALTER A. TILLIT JR. LICENSE No. 44167 STATE OF FLORIDA PROFESSIONAL ENGINEER

MIAMI-DADE COUNTY

PE SEAL/SIGNATURE/DATE

©2012 TILTECO INC.

TILTECO INC.
TILLIT TESTING & ENGINEERING COMPANY
6555 N.W. 36th. St., Ste. 305 – VIRGINIA GARDENS, FL 33166
Phone : (305) 871-1530 , Fax : (305) 871-1531
e-mail: tilteco@aol.com
EB-0006719
WALTER A. TILLIT Jr., P.E.
FLORIDA Lic. # 44167

RLL 55-X SLAT END RETENTION
ROLL-UP HURRICANE ABATEMENT

ROLLAC SHUTTER OF TEXAS, INC.
5331 ORANGE STREET
PEARLAND, TX. 77581
PH:(281) 485-1911, FAX:(281) 485-0839

REV N°	DESCRIPTION	DATE	REV N°	DESCRIPTION	DATE
1	OLD 09-004	02/17/12	3		
2			4		

I.A./R.E./A.G.
DRAWN BY

02/17/12
DATE

12-041
DRAWING N°

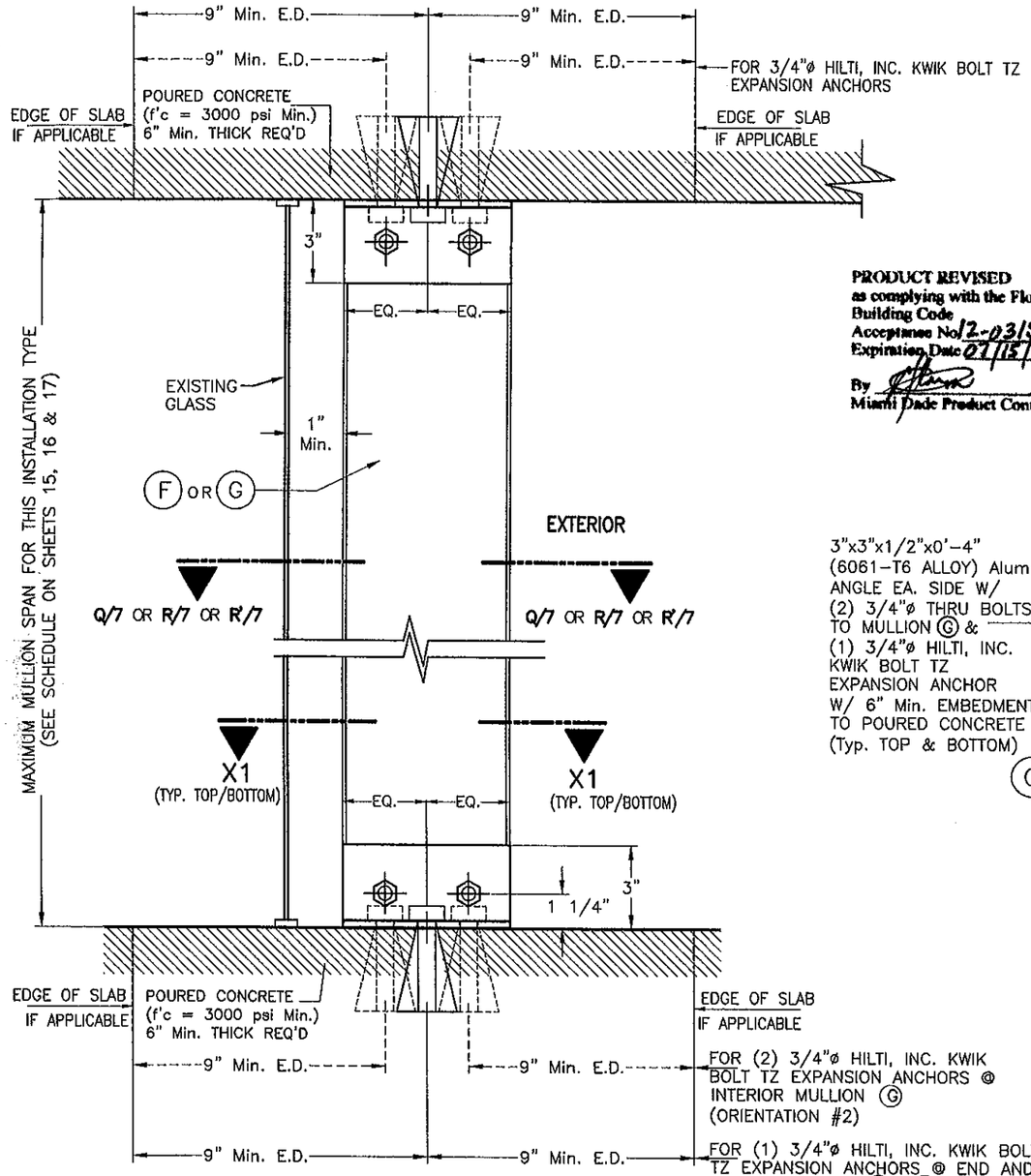

PRODUCT REVISED
as complying with the Florida Building Code
Acceptance No 12-03.15.13
Expiration Date 07/15/2014
By
Miami Dade Product Control

FLOOR TO CEILING/TRAPPED MOUNTING: MULLION (F) OR (G) SECTION W-1 *

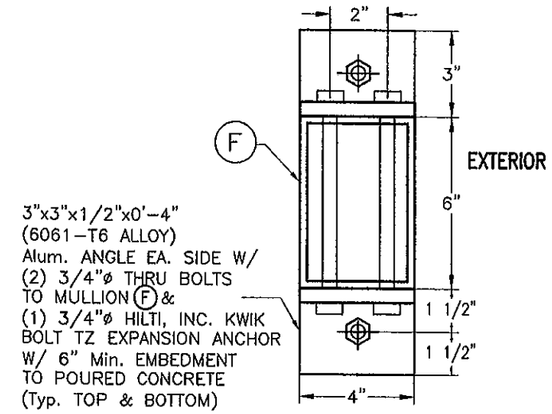

3"x3"x1/2"x0'-4" (6061-T6 ALLOY) Alum. ANGLE EA. SIDE W/ (2) 3/4"ø THRU BOLTS TO MULLION (F) & (1) 3/4"ø HILTI, INC. KWIK BOLT TZ EXPANSION ANCHOR W/ 6" Min. EMBEDMENT TO POURED CONCRETE (Typ. TOP & BOTTOM)

SECTION X1-X1 W/ (F) *
(END & INTERIOR MULLION W/ ORIENTATION # 1)

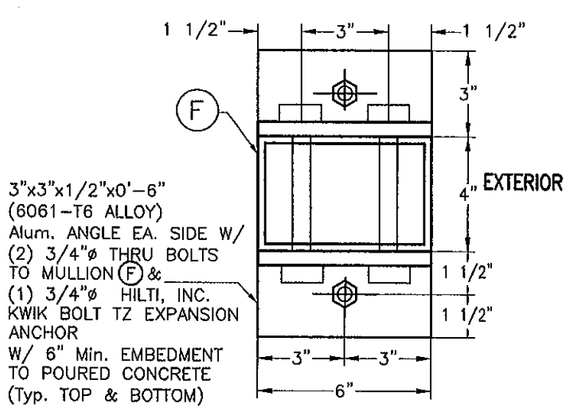

3"x3"x1/2"x0'-6" (6061-T6 ALLOY) Alum. ANGLE EA. SIDE W/ (2) 3/4"ø THRU BOLTS TO MULLION (F) & (1) 3/4"ø HILTI, INC. KWIK BOLT TZ EXPANSION ANCHOR W/ 6" Min. EMBEDMENT TO POURED CONCRETE (Typ. TOP & BOTTOM)

ALTERNATIVE SECTION X1-X1 W/ (F) *
(END & INTERIOR MULLION W/ ORIENTATION # 2)

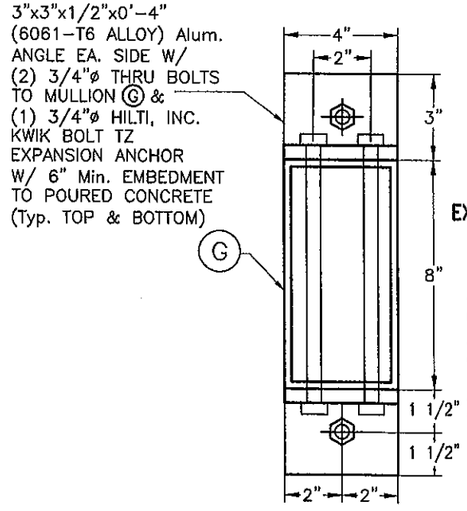

3"x3"x1/2"x0'-4" (6061-T6 ALLOY) Alum. ANGLE EA. SIDE W/ (2) 3/4"ø THRU BOLTS TO MULLION (G) & (1) 3/4"ø HILTI, INC. KWIK BOLT TZ EXPANSION ANCHOR W/ 6" Min. EMBEDMENT TO POURED CONCRETE (Typ. TOP & BOTTOM)

SECTION X1-X1 W/ (G) *
(END & INTERIOR MULLION W/ ORIENTATION # 1)

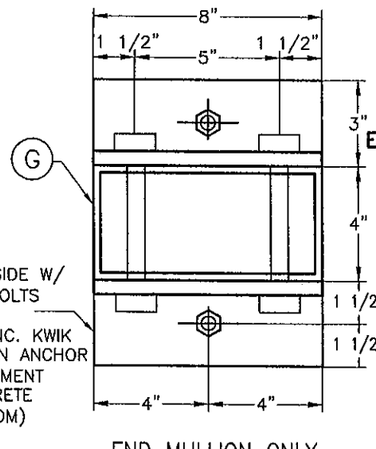

3"x3"x1/2"x0'-8" (6061-T6 ALLOY) Alum. ANGLE EA. SIDE W/ (2) 3/4"ø THRU BOLTS TO MULLION (G) & (1) 3/4"ø HILTI, INC. KWIK BOLT TZ EXPANSION ANCHOR W/ 6" Min. EMBEDMENT TO POURED CONCRETE (Typ. TOP & BOTTOM)

END MULLION ONLY

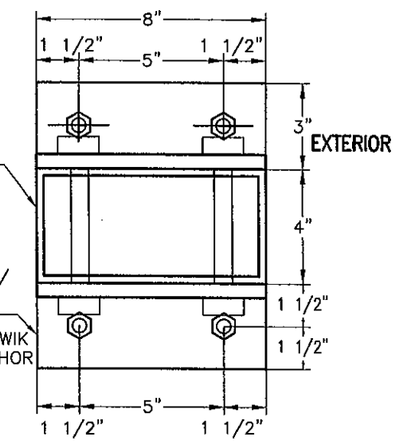

3"x3"x1/2"x0'-8" (6061-T6 ALLOY) Alum. ANGLE EA. SIDE W/ (2) 3/4"ø THRU BOLTS TO MULLION (G) & (2) 3/4"ø HILTI, INC. KWIK BOLT TZ EXPANSION ANCHOR W/ 6" Min. EMBEDMENT TO POURED CONCRETE (Typ. TOP & BOTTOM)

INTERIOR MULLION ONLY

ALTERNATIVE SECTION X1-X1 W/ (G) *
(W/ ORIENTATION # 2)

* SIDE RAILS (B1), (B2), (B3) OR (B4) AND BOX NOT SHOWN FOR CLARITY.

END & INTERIOR TRAPPED MOUNTED MULLION INSTALLATION

SCALE: 3/16" = 1"

FLORIDA BUILDING CODE. (High Velocity Hurricane Zone)

WALTER A. TILLIT JR. LICENSE No. 44167 STATE OF FLORIDA PROFESSIONAL ENGINEER

MIAMI-DADE COUNTY

P.E. SEAL/SIGNATURE/DATE

©2012 TILTECO INC.

TILTECO INC.
TILLIT TESTING & ENGINEERING COMPANY
6395 N.W. 36th. St., Ste. 305 - VIRGINIA GARDENS, Fl. 33166
Phone : (305) 871-1830 , Fax : (305) 871-1531
e-mail: tilteco@aol.com
EB-0006719
WALTER A. TILLIT Jr., P.E.
FLORIDA Lic. # 44167

RLL 55-X SLAT END RETENTION
ROLL-UP HURRICANE ABATEMENT

I.A./R.E./A.G. DRAWN BY

ROLLAC SHUTTER OF TEXAS, INC.
5331 ORANGE STREET
PEARLAND, TX. 77581
PH:(281) 485-1911, FAX:(281) 485-0839

02/17/12 DATE

12-041 DRAWING N°

REV N°	DESCRIPTION	DATE	REV N°	DESCRIPTION	DATE
1	OLD 09-004	02/17/12	3		
2			4		

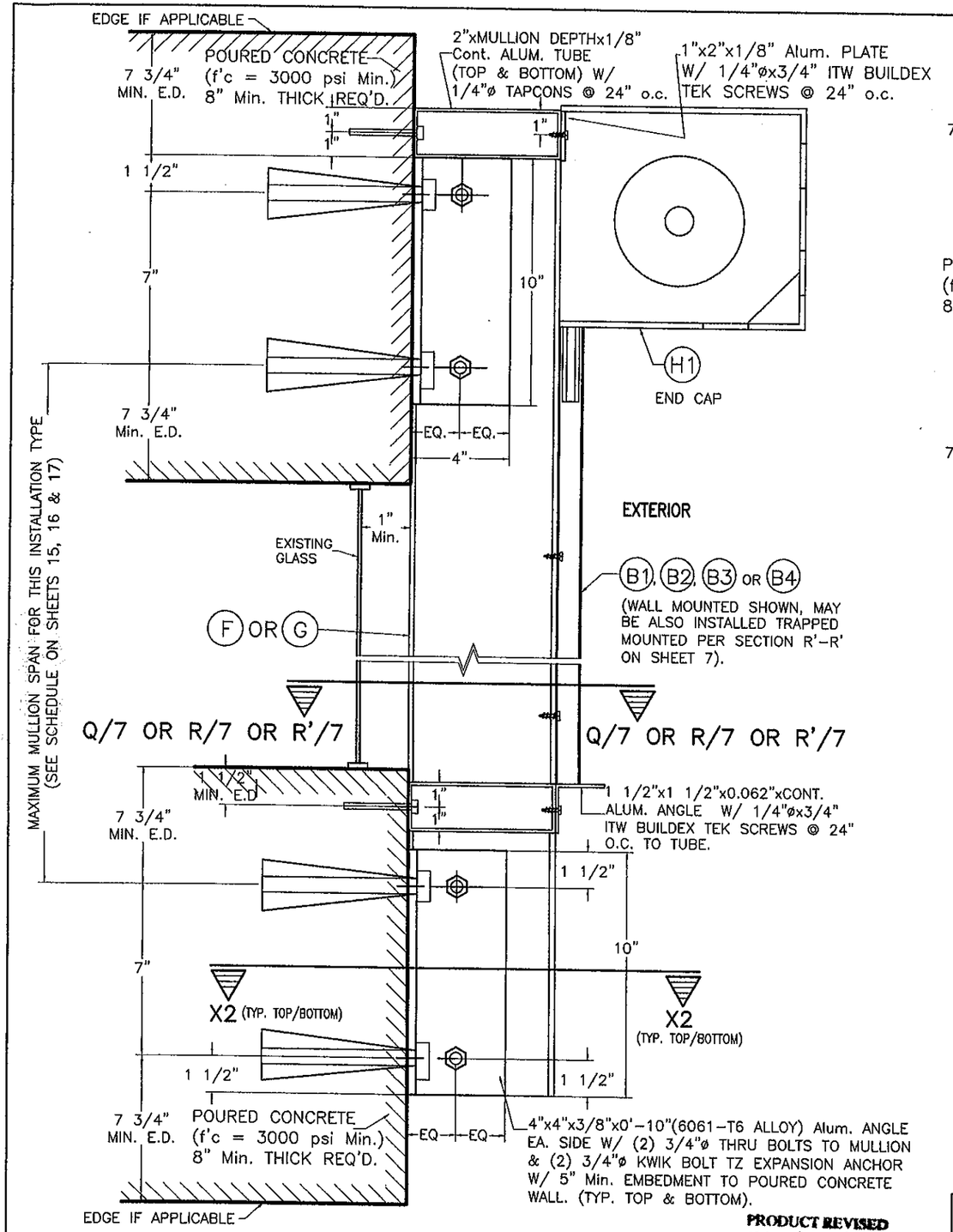

WALL MOUNTING : MULLION (F) OR (G)
POURED CONCRETE WALL
SECTION W-2

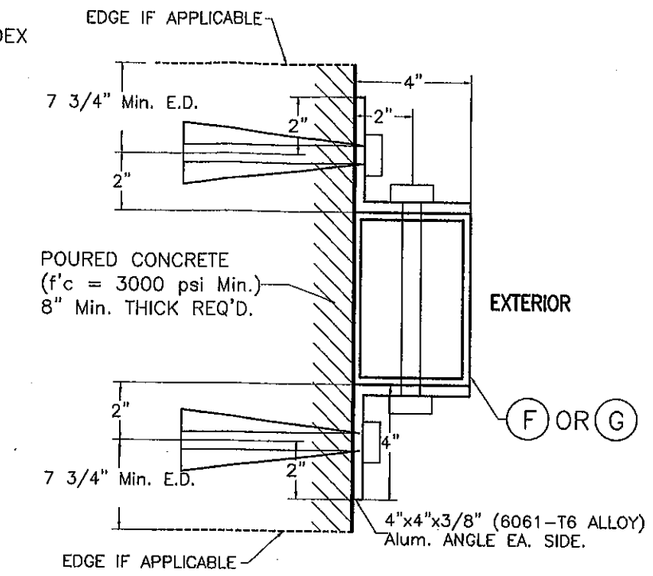

SECTION X2-X2 W/ (F) OR (G) *
(END & INTERIOR MULLION W/ ORIENTATION # 1)
(6"x4" OR 8"x4")

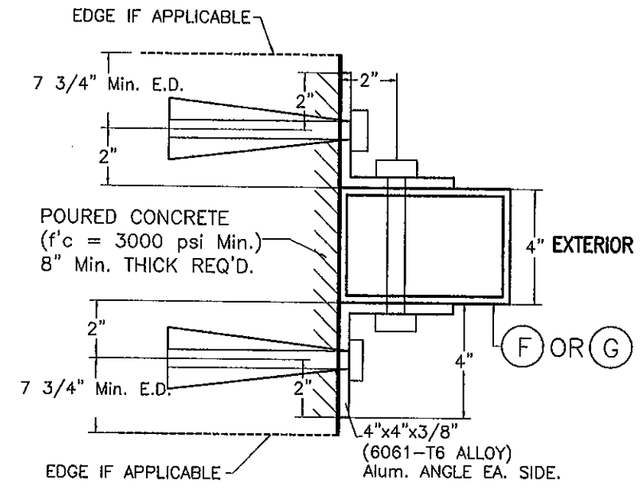

ALTERNATIVE SECTION X2-X2 W/ (F) OR (G) *
(END & INTERIOR MULLION W/ ORIENTATION # 2)
(4"x6" OR 4"x8")

* SIDE RAILS (B1), (B2), (B3) OR (B4) NOT SHOWN FOR CLARITY.

END & INTERIOR WALL MOUNTED MULLION INSTALLATION

SCALE: 1/8" = 1"

PRODUCT REVISED
as complying with the Florida Building Code
Acceptance No. 12-0315.13
Expiration Date 02/15/2014
By
Miami-Dade Product Control

MIAMI-DADE COUNTY

WALTER A. TILLIT JR. LICENSE No. 44167 STATE OF FLORIDA PROFESSIONAL ENGINEER

P.E. SIGNATURE/DATE

FLORIDA BUILDING CODE. (High Velocity Hurricane Zone)

©2012 TILTECO INC.

TILTECO INC.
TILLIT TESTING & ENGINEERING COMPANY
6355 N.W. 36th. St., Ste. 305 - VIRGINIA GARDENS, Fl. 33166
Phone : (305) 871-1530 , Fax : (305) 871-1531
e-mail: tilteco@aol.com
EB-0006719
WALTER A. TILLIT Jr., P.E.
FLORIDA Lic. # 44167

RLL 55-X SLAT END RETENTION
ROLL-UP HURRICANE ABATEMENT

I.A./R.E./A.G. DRAWN BY

ROLLAC SHUTTER OF TEXAS, INC.
5331 ORANGE STREET
PEARLAND, TX. 77581
PH:(281) 485-1911, FAX:(281) 485-0839

02/17/12 DATE

12-041 DRAWING N°

REV N°	DESCRIPTION	DATE	REV N°	DESCRIPTION	DATE
1	OLD 09-004	02/17/12	3		
2			4		

SHEET 14 OF 19

SCHEDULE 1a
FLOOR TO CEILING (TRAPPED) MOUNTING
MAX. SPAN (ft.) FOR END AND INTERIOR MULLION FOR A GIVEN A.S.D. DESIGN PRESSURE RATING (p.s.f.) AND A MAX. MULLION SPACING (ft.) *
VALID ONLY FOR INSTALLATIONS INTO CONCRETE

MAX. A.S.D. DESIGN PRESSURE RATING (p.s.f.)	MAXIMUM MULLION SPACING (ft) *	MAXIMUM MULLION SPAN (ft.)							
		(F) 4"x6"x1/4" MULLION				(G) 4"x8"x1/4" MULLION			
		ORIENTATION #1 (▭) ‡		ORIENTATION #2 (▯) ‡		ORIENTATION #1 (▭) ‡		ORIENTATION #2 (▯) ‡	
		END	INTERIOR	END	INTERIOR	END	INTERIOR	END	INTERIOR
30.0	19'–8"	6'–9"	9'–9"	6'–2"	12'–0"	8'–1"	10'–7"	7'–1"	12'–0"
35.0	18'–3"	6'–7"	9'–6"	6'–1"	11'–9"	7'–10"	10'–4"	6'–11"	12'–0"
40.0	16'–8"	6'–7"	9'–5"	6'–1"	11'–7"	7'–10"	10'–2"	6'–11"	12'–0"
45.0	15'–3"	6'–7"	9'–3"	6'–1"	11'–6"	7'–10"	10'–1"	6'–11"	12'–0"
50.0	14'–3"	6'–7"	9'–2"	6'–0"	11'–4"	7'–9"	10'–0"	6'–11"	12'–0"
55.0	13'–3"	6'–7"	9'–1"	6'–1"	11'–3"	7'–10"	9'–11"	6'–11"	12'–0"
60.0	12'–6"	6'–7"	9'–0"	6'–0"	11'–2"	7'–9"	9'–10"	6'–11"	12'–0"
65.0	11'–11"	6'–6"	8'–11"	6'–0"	11'–1"	7'–9"	9'–8"	6'–11"	12'–0"
70.0	11'–5"	6'–6"	8'–10"	6'–0"	10'–11"	7'–8"	9'–7"	6'–10"	12'–0"
75.0	10'–11"	6'–6"	8'–9"	6'–0"	10'–10"	7'–8"	9'–6"	6'–10"	12'–0"
80.0	10'–5"	6'–6"	8'–9"	6'–0"	10'–9"	7'–8"	9'–6"	6'–10"	12'–0"
85.0	10'–0"	6'–5"	8'–8"	6'–0"	10'–8"	7'–8"	9'–5"	6'–10"	12'–0"
90.0	9'–6"	6'–6"	8'–8"	6'–0"	10'–8"	7'–9"	9'–5"	6'–11"	12'–0"
95.0	9'–3"	6'–6"	8'–7"	6'–0"	10'–7"	7'–8"	9'–4"	6'–10"	12'–0"
100.0	8'–11"	6'–6"	8'–6"	6'–0"	10'–7"	7'–8"	9'–3"	6'–11"	12'–0"
105.0	8'–9"	6'–5"	8'–5"	5'–11"	10'–5"	7'–7"	9'–2"	6'–10"	12'–0"
110.0	8'–6"	6'–5"	8'–4"	5'–11"	10'–4"	7'–7"	9'–1"	6'–10"	12'–0"
115.0	8'–3"	6'–5"	8'–4"	5'–11"	10'–4"	7'–7"	9'–1"	6'–10"	12'–0"
120.0	8'–0"	6'–5"	8'–4"	5'–11"	10'–3"	7'–7"	9'–0"	6'–10"	12'–0"
125.0	7'–10"	6'–5"	8'–3"	5'–11"	10'–2"	7'–7	9'–0"	6'–10"	12'–0"
130.0	7'–8"	6'–5"	8'–3"	5'–11"	10'–0"	7'–7"	8'–11"	6'–10"	12'–0"
135.0	7'–6"	6'–4"	8'–2"	5'–11"	9'–10"	7'–6 "	8'–10"	6'–9"	12'–0"
140.0	7'–3"	6'–5"	8'–2"	5'–11"	9'–9"	7'–7"	8'–10"	6'–10"	12'–0"
145.0	7'–2"	6'–4"	8'–1"	5'–11"	9'–7"	7'–6"	8'–10"	6'–10"	12'–0"
150.0	7'–0"	6'–4"	8'–1"	5'–11"	9'–5"	7'–6 "	8'–9"	6'–10"	12'–0"
155.0	6'–10"	6'–4"	8'–0"	5'–11"	9'–4"	7'–6"	8'–9"	6'–10"	12'–0"
160.0	6'–9"	6'–4"	8'–0"	5'–11"	9'–2"	7'–6"	8'–8"	6'–9"	12'–0"

SCHEDULE 2a
WALL MOUNTING
MAX. SPAN (ft.) FOR END AND INTERIOR MULLION FOR A GIVEN A.S.D. DESIGN PRESSURE RATING (p.s.f.) AND A MAX. MULLION SPACING (ft.) *
VALID ONLY FOR INSTALLATIONS INTO CONCRETE

MAX. A.S.D. DESIGN PRESSURE RATING (p.s.f.)	MAXIMUM MULLION SPACING (ft) *	MAXIMUM MULLION SPAN (ft.)							
		(F) 4"x6"x1/4" MULLION				(G) 4"x8"x1/4" MULLION			
		ORIENTATION #1 (▭) ‡		ORIENTATION #2 (▯) ‡		ORIENTATION #1 (▭) ‡		ORIENTATION #2 (▯) ‡	
		END	INTERIOR	END	INTERIOR	END	INTERIOR	END	INTERIOR
30.0	19'–8"	6'–9"	9'–9"	6'–2"	12'–0"	8'–1"	10'–7"	7'–1"	12'–0"
35.0	18'–3"	6'–7"	9'–6"	6'–1"	11'–9"	7'–10"	10'–4"	6'–11"	12'–0"
40.0	16'–8"	6'–7"	9'–5"	6'–1"	11'–7"	7'–10"	10'–2"	6'–11"	12'–0"
45.0	15'–3"	6'–7"	9'–3"	6'–1"	11'–6"	7'–10"	10'–1"	6'–11"	12'–0"
50.0	14'–3"	6'–7"	9'–2"	6'–0"	11'–4"	7'–9"	10'–0"	6'–11"	12'–0"
55.0	13'–3"	6'–7"	9'–1"	6'–1"	11'–3"	7'–10"	9'–11"	6'–11"	12'–0"
60.0	12'–6"	6'–7"	9'–0"	6'–0"	11'–2"	7'–9"	9'–10"	6'–11"	12'–0"
65.0	11'–11"	6'–6"	8'–11"	6'–0"	11'–1"	7'–9"	9'–8"	6'–11"	12'–0"
70.0	11'–5"	6'–6"	8'–10"	6'–0"	10'–11"	7'–8"	9'–7"	6'–10"	12'–0"
75.0	10'–11"	6'–6"	8'–9"	6'–0"	10'–10"	7'–8"	9'–6"	6'–10"	12'–0"
80.0	10'–5"	6'–6"	8'–9"	6'–0"	10'–9"	7'–8"	9'–6"	6'–10"	12'–0"
85.0	10'–0"	6'–5"	8'–8"	6'–0"	10'–8"	7'–8"	9'–5"	6'–10"	12'–0"
90.0	9'–6"	6'–6"	8'–8"	6'–0"	10'–8"	7'–9"	9'–5"	6'–11"	12'–0"
95.0	9'–3"	6'–6"	8'–7"	6'–0"	10'–7"	7'–8"	9'–4"	6'–10"	12'–0"
100.0	8'–11"	6'–6"	8'–6"	6'–0"	10'–7"	7'–8"	9'–3"	6'–11"	12'–0"
105.0	8'–9"	6'–5"	8'–5"	5'–11"	10'–5"	7'–7"	9'–2"	6'–10"	12'–0"
110.0	8'–6"	6'–5"	8'–5"	5'–11"	10'–4"	7'–7"	9'–1"	6'–10"	12'–0"
115.0	8'–3"	6'–5"	8'–4"	5'–11"	10'–4"	7'–7"	9'–1"	6'–10"	12'–0"
120.0	8'–0"	6'–5"	8'–4"	5'–11"	10'–3"	7'–7"	9'–0"	6'–10"	12'–0"
125.0	7'–10"	6'–4"	8'–3"	5'–11"	10'–3"	7'–7	9'–0"	6'–10"	12'–0"
130.0	7'–8"	6'–5"	8'–3"	5'–11"	10'–2"	7'–7"	8'–11"	6'–10"	12'–0"
135.0	7'–6"	6'–4"	8'–2"	5'–11"	10'–1"	7'–6 "	8'–10"	6'–9"	12'–0"
140.0	7'–3"	6'–5"	8'–2"	5'–11"	10'–1"	7'–7"	8'–10"	6'–10"	12'–0"
145.0	7'–2"	6'–4"	8'–1"	5'–11"	10'–0"	7'–6"	8'–10"	6'–10"	12'–0"
150.0	7'–0"	6'–4"	8'–1"	5'–11"	10'–0"	7'–6 "	8'–9"	6'–10"	12'–0"
155.0	6'–10"	6'–4"	8'–0"	5'–11"	9'–11"	7'–6"	8'–9"	6'–10"	12'–0"
160.0	6'–9"	6'–4"	8'–0"	5'–11"	9'–11"	7'–6"	8'–8"	6'–9"	12'–5"

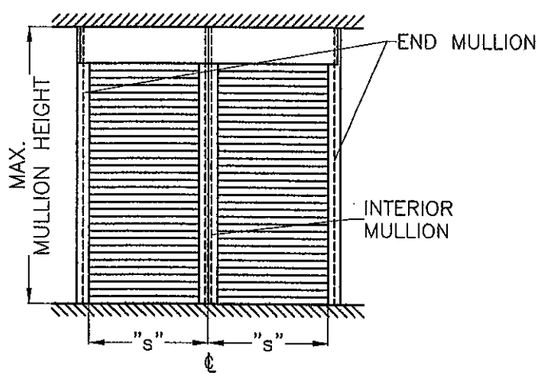

MULLION SPACING: "s"

* MAXIMUM MULLION SPACING SHALL BE SUCH THAT MAX SLAT SPAN FOR THAT A.S.D. DESIGN PRESSURE RATING SHALL NOT BE EXCEEDED.

‡ MULLION ORIENTATION IS AS SEEN FROM THE OUTSIDE (EXTERIOR) OF PRODUCT.

FLORIDA BUILDING CODE. (High Velocity Hurricane Zone)

PRODUCT REVISED
as complying with the Florida Building Code
Acceptance No 12-0315.13
Expiration Date 07/15/2014
By
Miami Dade Product Control

MIAMI-DADE COUNTY

WALTER A. TILLIT JR. LICENSE No. 44167 STATE OF FLORIDA PROFESSIONAL ENGINEER

P.E. SEAL/SIGNATURE/DATE

©2012 TILTECO INC.

TILTECO INC.
TILLIT TESTING & ENGINEERING COMPANY
8358 N.W. 36th. St., Ste. 305 – VIRGINIA GARDENS, FL. 33166
Phone : (305) 871-1530 , Fax : (305) 871-1531
e-mail: tilteco@aol.com
EB-0006719
WALTER A. TILLIT Jr., P.E.
FLORIDA Lic. # 44167

RLL 55-X SLAT END RETENTION
ROLL-UP HURRICANE ABATEMENT

ROLLAC SHUTTER OF TEXAS, INC.
5331 ORANGE STREET
PEARLAND, TX. 77581
PH:(281) 485-1911, FAX:(281) 485-0839

REV N°	DESCRIPTION	DATE	REV N°	DESCRIPTION	DATE
1	OLD 09-004	02/17/12	3		
2			4		

I.A./R.E./A.G. DRAWN BY
02/17/12 DATE
12-041 DRAWING N°
SHEET 15 OF 19

SCHEDULE 1b
FLOOR TO CEILING (TRAPPED) MOUNTING
MAX. SPAN (ft.) FOR END AND INTERIOR MULLION FOR A GIVEN A.S.D. DESIGN PRESSURE RATING (p.s.f.) AND A 12'-0" MAX. MULLION SPACING (ft.) * VALID ONLY FOR INSTALLATIONS INTO CONCRETE

MAX. A.S.D. DESIGN PRESSURE RATING (p.s.f.)	MAXIMUM MULLION SPACING (ft) *	MAXIMUM MULLION SPAN (ft.)							
		(F) 4"x6"x1/4" MULLION				(G) 4"x8"x1/4" MULLION			
		ORIENTATION #1 (▭) ‡		ORIENTATION #2 (▯) ‡		ORIENTATION #1 (▭) ‡		ORIENTATION #2 (▯) ‡	
		END	INTERIOR	END	INTERIOR	END	INTERIOR	END	INTERIOR
30.0	12'–0"	9'–6"	11'–6"	8'–3"	12'–0"	11'–4"	12'–0"	9'–0"	12'–0"
35.0	12'–0"	8'–10"	10'–11"	7'–10"	12'–0"	10'–5"	11'–11"	8'–6"	12'–0"
40.0	12'–0"	8'–3"	10'–5"	7'–6"	12'–0"	9'–9"	11'–4"	9'–6"	12'–0"
45.0	12'–0"	7'–9"	10'–1"	7'–2"	12'–0"	9'–3"	10'–11"	9'–1"	12'–0"
50.0	12'–0"	7'–4"	9'–8"	6'–9"	12'–0"	8'–9"	10'–7"	8'–9"	12'–0"
55.0	12'–0"	7'–0"	9'–5"	6'–6"	11'–8"	8'–4"	10'–3"	8'–6"	12'–0"
60.0	12'–0"	6'–9"	9'–2"	6'–3"	11'–4"	8'–0"	9'–11"	8'–3"	12'–0"
65.0	12'–0"	6'–6"	8'–11"	6'–0"	11'–0"	7'–8"	9'–8"	8'–0"	12'–0"

SCHEDULE 2b
WALL MOUNTING
MAX. SPAN (ft.) FOR END AND INTERIOR MULLION FOR A GIVEN A.S.D. DESIGN PRESSURE RATING (p.s.f.) AND A 12'-0" MAX. MULLION SPACING (ft.) * VALID ONLY FOR INSTALLATIONS INTO CONCRETE

MAX. A.S.D. DESIGN PRESSURE RATING (p.s.f.)	MAXIMUM MULLION SPACING (ft) *	MAXIMUM MULLION SPAN (ft.)							
		(F) 4"x6"x1/4" MULLION				(G) 4"x8"x1/4" MULLION			
		ORIENTATION #1 (▭) ‡		ORIENTATION #2 (▯) ‡		ORIENTATION #1 (▭) ‡		ORIENTATION #2 (▯) ‡	
		END	INTERIOR	END	INTERIOR	END	INTERIOR	END	INTERIOR
30.0	12'–0"	8'–3"	11'–6"	8'–3"	12'–0"	11'–4"	12'–0"	9'–0"	12'–0"
35.0	12'–0"	7'–10"	10'–11"	7'–10"	12'–0"	10'–5"	11'–11"	8'–6"	12'–0"
40.0	12'–0"	7'–6"	10'–5"	7'–6"	12'–0"	9'–9"	11'–4"	8'–2"	12'–0"
45.0	12'–0"	7'–2"	10'–1"	7'–2"	12'–0"	9'–3"	10'–11"	7'–10"	12'–0"
50.0	12'–0"	6'–9"	9'–8"	6'–9"	12'–0"	8'–9"	10'–7"	7'–7"	12'–0"
55.0	12'–0"	6'–6"	9'–5"	6'–6"	11'–8"	8'–4"	10'–3"	7'–4"	12'–0"
60.0	12'–0"	6'–3"	9'–2"	6'–3"	11'–4"	8'–0"	9'–11"	7'–1"	12'–0"
65.0	12'–0"	6'–0"	8'–11"	6'–0"	11'–0"	7'–8"	9'–8"	6'–10"	12'–0"

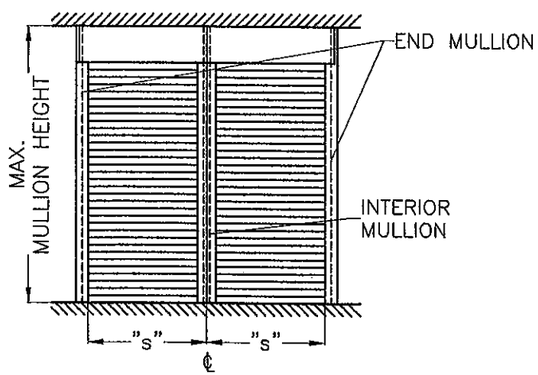

MULLION SPACING: "s"

* MAXIMUM MULLION SPACING SHALL BE SUCH THAT MAX SLAT SPAN FOR THAT A.S.D. DESIGN PRESSURE RATING SHALL NOT BE EXCEEDED.

‡ MULLION ORIENTATION IS AS SEEN FROM THE OUTSIDE (EXTERIOR) OF PRODUCT.

FLORIDA BUILDING CODE. (High Velocity Hurricane Zone)

PRODUCT REVISED
as complying with the Florida Building Code
Acceptance No 12-0315.13
Expiration Date 07/15/2014
By
Miami Dade Product Control

MIAMI–DADE COUNTY

WALTER A. TILLIT Jr. LICENSE No. 44167 STATE OF FLORIDA PROFESSIONAL ENGINEER

P.E. SEAL/SIGNATURE/DATE

©2012 TILTECO INC.

TILTECO INC.
TILLIT TESTING & ENGINEERING COMPANY
6355 N.W. 36th. St., Ste. 305 – VIRGINIA GARDENS, Fl. 33166
Phone : (305) 871–1530 , Fax : (305) 871–1531
e–mail: tilteco@aol.com
EB–0006719
WALTER A. TILLIT Jr., P.E.
FLORIDA Lic. # 44167

RLL 55-X SLAT END RETENTION ROLL-UP HURRICANE ABATEMENT

ROLLAC SHUTTER OF TEXAS, INC.
5331 ORANGE STREET
PEARLAND, TX. 77581
PH:(281) 485-1911, FAX:(281) 485-0839

REV N°	DESCRIPTION	DATE	REV N°	DESCRIPTION	DATE
1	OLD 09–004	02/17/12	3		
2			4		

I.A./R.E./A.G. DRAWN BY
02/17/12 DATE
12–041 DRAWING N°

SCHEDULE 1c
FLOOR TO CEILING (TRAPPED) MOUNTING
MAX. SPAN (ft.) FOR END AND INTERIOR MULLION FOR A GIVEN A.S.D. DESIGN PRESSURE RATING (p.s.f.) AND A 7'-0" MAX. MULLION * SPACING (ft.)
VALID ONLY FOR INSTALLATIONS INTO CONCRETE

MAX. A.S.D. DESIGN PRESSURE RATING (p.s.f.)	MAXIMUM MULLION SPACING (ft) *	MAXIMUM MULLION SPAN (ft.)							
		(F) 4"x6"x1/4" MULLION				(G) 4"x8"x1/4" MULLION			
		ORIENTATION #1 (▭) ‡		ORIENTATION #2 (▯) ‡		ORIENTATION #1 (▭) ‡		ORIENTATION #2 (▯) ‡	
		END	INTERIOR	END	INTERIOR	END	INTERIOR	END	INTERIOR
30.0	7'-0"	12'-0"	12'-0"	12'-0"	12'-0"	12'-0"	12'-0"	12'-0"	12'-0"
35.0	7'-0"	12'-0"	12'-0"	12'-0"	12'-0"	12'-0"	12'-0"	12'-0"	12'-0"
40.0	7'-0"	12'-0"	12'-0"	12'-0"	12'-0"	12'-0"	12'-0"	12'-0"	12'-0"
45.0	7'-0"	12'-0"	12'-0"	11'-1"	12'-0"	12'-0"	12'-0"	12'-0"	12'-0"
50.0	7'-0"	12'-0"	11'-7"	10'-5"	12'-0"	12'-0"	12'-0"	11'-3"	12'-0"
55.0	7'-0"	11'-7"	11'-3"	9'-10"	12'-0"	12'-0"	12'-0"	10'-8"	12'-0"
60.0	7'-0"	10'-11"	10'-11"	9'-5"	12'-0"	12'-0"	11'-11"	10'-3"	12'-0"
65.0	7'-0"	10'-4"	10'-8"	9'-1"	12'-0"	12'-0"	11'-7"	9'-10"	12'-0"
70.0	7'-0"	9'-10"	10'-5"	8'-9"	12'-0"	11'-7"	11'-3"	9'-6"	12'-0"
75.0	7'-0"	9'-5"	10'-2"	8'-6"	12'-0"	11'-2"	11'-0"	9'-3"	12'-0"
80.0	7'-0"	9'-1"	9'-11"	8'-3"	12'-4"	10'-8"	10'-10"	8'-11"	12'-0"
85.0	7'-0"	8'-9"	9'-9"	8'-0"	12'-1"	10'-4"	10'-7"	8'-9"	12'-0"
90.0	7'-0"	8'-5"	9'-7"	7'-10"	11'-10"	10'-0"	10'-5"	8'-6"	12'-0"
95.0	7'-0"	8'-2"	9'-5"	7'-8"	11'-7"	9'-8"	10'-2"	8'-4"	12'-0"
100.0	7'-0"	7'-10"	9'-3"	7'-5"	11'-5"	9'-5"	10'-0"	8'-2"	12'-0"
105.0	7'-0"	7'-9"	9'-1"	7'-2"	11'-3"	9'-1"	9'-10"	8'-0"	12'-0"
110.0	7'-0"	7'-6"	8'-11"	7'-0"	11'-1"	8'-11"	9'-9"	7'-10"	12'-0"
115.0	7'-0"	7'-4"	8'-10"	6'-10"	10'-11"	8'-8"	9'-7"	7'-9"	12'-0"
120.0	7'-0"	7'-2"	8'-8"	6'-8"	10'-9"	8'-6"	9'-5"	7'-7"	12'-0"
125.0	7'-0"	7'-0"	8'-7"	6'-6"	10'-7"	8'-3"	9'-4"	7'-6"	12'-0"
130.0	7'-0"	6'-10"	8'-5"	6'-5"	10'-6"	8'-1"	9'-2"	7'-4"	12'-0"
135.0	7'-0"	6'-9"	8'-4"	6'-3"	10'-4"	7'-11"	9'-1"	7'-2"	12'-0"
140.0	7'-0"	6'-7"	8'-3"	6'-2"	10'-1"	7'-9"	9'-0"	7'-1"	12'-0"
145.0	7'-0"	6'-6"	8'-2"	6'-0"	10'-9"	7'-8"	8'-10"	6'-11"	12'-0"
150.0	7'-0"	6'-4"	8'-1"	5'-11"	10'-5"	7'-6"	8'-9"	6'-10"	12'-0"

SCHEDULE 2c
WALL MOUNTING
MAX. SPAN (ft.) FOR END AND INTERIOR MULLION FOR A GIVEN A.S.D. DESIGN PRESSURE RATING (p.s.f.) AND A 7'-0" MAX. MULLION * SPACING (ft.)
VALID ONLY FOR INSTALLATIONS INTO CONCRETE

MAX. A.S.D. DESIGN PRESSURE RATING (p.s.f.)	MAXIMUM MULLION SPACING (ft) *	MAXIMUM MULLION SPAN (ft.)							
		(F) 4"x6"x1/4" MULLION				(G) 4"x8"x1/4" MULLION			
		ORIENTATION #1 (▭) ‡		ORIENTATION #2 (▯) ‡		ORIENTATION #1 (▭) ‡		ORIENTATION #2 (▯) ‡	
		END	INTERIOR	END	INTERIOR	END	INTERIOR	END	INTERIOR
30.0	7'-0"	12'-0"	12'-0"	12'-0"	12'-0"	12'-0"	12'-0"	12'-0"	12'-0"
35.0	7'-0"	12'-0"	12'-0"	12'-0"	12'-0"	12'-0"	12'-0"	12'-0"	12'-0"
40.0	7'-0"	12'-0"	12'-0"	12'-0"	12'-0"	12'-0"	12'-0"	12'-0"	12'-0"
45.0	7'-0"	12'-0"	12'-0"	11'-1"	12'-0"	12'-0"	12'-0"	12'-0"	12'-0"
50.0	7'-0"	12'-0"	11'-7"	10'-5"	12'-0"	12'-0"	12'-0"	11'-3"	12'-0"
55.0	7'-0"	11'-7"	11'-3"	9'-10"	12'-0"	12'-0"	12'-0"	10'-8"	12'-0"
60.0	7'-0"	10'-11"	10'-11"	9'-5"	12'-0"	12'-0"	11'-11"	10'-3"	12'-0"
65.0	7'-0"	10'-4"	10'-8"	9'-1"	12'-0"	12'-0"	11'-7"	9'-10"	12'-0"
70.0	7'-0"	9'-10"	10'-5"	8'-9"	12'-0"	11'-7"	11'-3"	9'-6"	12'-0"
75.0	7'-0"	9'-5"	10'-2"	8'-6"	12'-0"	11'-2"	11'-0"	9'-3"	12'-0"
80.0	7'-0"	9'-1"	9'-11"	8'-3"	12'-0"	10'-8"	10'-10"	8'-11"	12'-0"
85.0	7'-0"	8'-9"	9'-9"	8'-0"	12'-0"	10'-4"	10'-7"	8'-9"	12'-0"
90.0	7'-0"	8'-5"	9'-7"	7'-10"	11'-10"	10'-0"	10'-5"	8'-6"	12'-0"
95.0	7'-0"	8'-2"	9'-5"	7'-8"	11'-7"	9'-8"	10'-2"	8'-4"	12'-0"
100.0	7'-0"	7'-10"	9'-3"	7'-5"	11'-5"	9'-5"	10'-0"	8'-2"	12'-0"
105.0	7'-0"	7'-9"	9'-1"	7'-2"	11'-3"	9'-1"	9'-10"	8'-0"	12'-0"
110.0	7'-0"	7'-6"	8'-11"	7'-0"	11'-1"	8'-11"	9'-9"	7'-10"	12'-0"
115.0	7'-0"	7'-4"	8'-10"	6'-10"	10'-11"	8'-8"	9'-7"	7'-9"	12'-0"
120.0	7'-0"	7'-2"	8'-8"	6'-8"	10'-9"	8'-6"	9'-5"	7'-7"	12'-0"
125.0	7'-0"	7'-0"	8'-7"	6'-6"	10'-7"	8'-3"	9'-4"	7'-6"	12'-0"
130.0	7'-0"	6'-10"	8'-5"	6'-5"	10'-6"	8'-1"	9'-2"	7'-4"	12'-0"
135.0	7'-0"	6'-9"	8'-4"	6'-3"	10'-4"	7'-11"	9'-1"	7'-2"	12'-0"
140.0	7'-0"	6'-7"	8'-3"	6'-2"	10'-3"	7'-9"	9'-0"	7'-1"	12'-0"
145.0	7'-0"	6'-6"	8'-2"	6'-0"	10'-1"	7'-8"	8'-10"	6'-11"	12'-0"
150.0	7'-0"	6'-4"	8'-1"	5'-11"	10'-0"	7'-6"	8'-9"	6'-10"	12'-0"

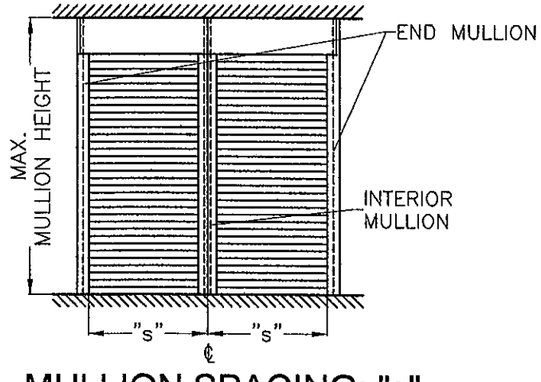

MULLION SPACING: "s"

* MAXIMUM MULLION SPACING SHALL BE SUCH THAT MAX SLAT SPAN FOR THAT A.S.D. DESIGN PRESSURE RATING SHALL NOT BE EXCEEDED.

‡ MULLION ORIENTATION IS AS SEEN FROM THE OUTSIDE (EXTERIOR) OF PRODUCT.

FLORIDA BUILDING CODE. (High Velocity Hurricane Zone)

PRODUCT REVISED
as complying with the Florida Building Code
Acceptance No 12-0315.13
Expiration Date 07/15/2014
By
Miami Date Product Control

MIAMI-DADE COUNTY

WALTER A. TILLIT JR. LICENSE No. 44167 STATE OF FLORIDA PROFESSIONAL ENGINEER
S.S. SEAL/SIGNATURE/DATE

©2012 TILTECO INC.

TILTECO INC.
TILLIT TESTING & ENGINEERING COMPANY
8355 N.W. 36th. St., Ste. 305 – VIRGINIA GARDENS, Fl. 33166
Phone : (305) 871-1530 , Fax : (305) 871-1531
e-mail: tilteco@aol.com
EB-0006719
WALTER A. TILLIT Jr., P.E.
FLORIDA Lic. # 44167

RLL 55-X SLAT END RETENTION
ROLL-UP HURRICANE ABATEMENT

ROLLAC SHUTTER OF TEXAS, INC.
5331 ORANGE STREET
PEARLAND, TX. 77581
PH:(281) 485-1911, FAX:(281) 485-0839

REV N°	DESCRIPTION	DATE	REV N°	DESCRIPTION	DATE
1	OLD 09-004	02/17/12	3		
2			4		

I.A./R.E./A.G. DRAWN BY
02/17/12 DATE
12-041 DRAWING N°
SHEET 17 OF 19

SLAT PERFORMANCE CHARTS Ib, IIb & IIIb:

FOR A GIVEN A.S.D. DESIGN PRESSURE RATING (p.s.f.) AND PRODUCT MOUNT CONDITION PER DETAIL 1 BELOW

CHART Ib: (ONLY VALID FOR 3/16" SLIP)

MAX. A.S.D. DESIGN PRESSURE RATING (p.s.f.)	USE MAXIMUM VALUE BETWEEN POSITIVE AND NEGATIVE A.S.D. LOAD							USE MAXIMUM POSITIVE A.S.D. LOAD VALUE
	MAX. SLAT SPAN "LMAX." (ft)						MIN. SLAT SPAN "LMIN." (ft)	REQUIRED MIN. SEPARATION TO GLASS MESURED TO BACK OF SLAT (in)
	WALL MOUNT (SEE NOTES Δ)			BUILD-OUT MOUNT W/ E2 (SEE NOTES Δ)			WALL & BUILD-OUT MOUNT W/ E2 G=0.36*, G=0.46* G=0.55* (SEE NOTES Δ)	
	G=0.55 *	G=0.46 *	G=0.36 *	G=0.55 *	G=0.46 *	G=0.36 *		
30.0	11'-11"	11'-5"	10'-3"	10'-2"	9'-4"	8'-4"	6'-6"	8 3/4"
35.0	11'-1"	10'-5"	–	9'-4"	8'-7"	–	6'-3"	
40.0	10'-3"	9'-7"	–	8'-8"	8'-0"	–	6'-0"	
45.0	9'-7"	–	–	8'-2"	–	–	5'-9"	
50.0	9'-0"	–	–	7'-9"	–	–	5'-7"	
55.0	8'-6"	–	–	7'-4"	–	–	5'-6"	
60.0	8'-2"	–	–	7'-1"	–	–	5'-4"	

*: G=0.55, APPLICABLE TO SOUTHERN YELLOW PINE #2 WOOD GRADE
G=0.46, APPLICABLE TO DOUGLAS FIR-SOUTH WOOD GRADE
G=0.36, APPLICABLE TO SPRUCE PINE-FIR SOUTH WOOD GRADE

CHART IIb: (ONLY VALID FOR 1/8" SLIP)

MAX. A.S.D. DESIGN PRESSURE RATING (p.s.f.)	USE MAXIMUM VALUE BETWEEN POSITIVE AND NEGATIVE A.S.D. LOAD						REQUIRED MIN. SLAT SPAN "LMIN." (ft)	USE MAXIMUM POSITIVE A.S.D. LOAD VALUE
	MAX. SLAT SPAN "LMAX." (ft)							REQUIRED MIN. SEPARATION TO GLASS MESURED TO BACK OF SLAT (in)
	WALL MOUNT (SEE NOTES Δ)			BUILD-OUT MOUNT W/ E2 (SEE NOTES Δ)			WALL & BUILD-OUT MOUNT W/ E2 G=0.36*, G=0.46* G=0.55* (SEE NOTES Δ)	
	G=0.55 *	G=0.46 *	G=0.36 *	G=0.55 *	G=0.46 *	G=0.36 *		
30.0	10'-8"	10'-3"	9'-4"	9'-2"	8'-6"	7'-8"	6'-2"	8 3/4"
35.0	10'-0"	9'-5"	–	8'-6"	7'-10"	–	5'-10"	
40.0	9'-3"	8'-8"	–	7'-11"	7'-4"	–	5'-8"	
45.0	8'-8"	–	–	7'-5"	–	–	5'-6"	
50.0	8'-2"	–	–	7'-1"	–	–	5'-4"	
55.0	7'-8"	–	–	6'-8"	–	–	5'-2"	
60.0	7'-5"	–	–	6'-6"	–	–	5'-0"	

CHART IIIb: (LESS THAN 1/8" SLIP)

MAX. A.S.D. DESIGN PRESSURE RATING (p.s.f.)	USE MAXIMUM VALUE BETWEEN POSITIVE AND NEGATIVE A.S.D. LOAD			USE MAXIMUM POSITIVE A.S.D. LOAD VALUE
	MAX. SLAT SPAN "LMAX." (FT)		MIN. SLAT SPAN "LMIN." (FT)	REQUIRED MIN. SEPARATION TO GLASS MESURED TO BACK OF SLAT (in)
	WALL & BUILD-OUT MOUNT W/ E2 G=0.36*, G=0.46* G=0.55* (SEE NOTES Δ)		WALL & BUILD-OUT MOUNT W/ E2 G=0.36*, G=0.46* G=0.55* (SEE NOTES Δ)	
30.0	6'-0"		0'-0"	6 1/2"
35.0	5'-9"			
40.0	5'-5"			
45.0	5'-1"			
50.0	4'-10"			
55.0	4'-7"			
60.0	4'-5"			

Δ NOTES:

1. ABOVE INDICATED MAX. SLAT SPANS MAY BE USED AS LONG AS ANCHOR SPACING SCHEDULES ON SHEET 19 INDICATE THAT A SPACING IS AVAILABLE FOR THE CORRESPONDING SLAT SPAN AND A.S.D. DESIGN PRESSURE RATING.

†: WOOD FRAME WALL TO BE BUILT STRICTLY IN ACCORDANCE WITH SPECS GIVEN ON DETAIL 1 AND PROVISIONS FROM CHAPTER 23 OF THE FLORIDA BUILDING CODE. MIN. WALL LENGTH AT EITHER SIDE OF OPENING MUST BE 33 INCHES.

2. INSTALLATIONS VALID ONLY FOR PRODUCT WITHOUT MULLIONS

INSTALLATIONS INTO WOOD FRAME STRUCTURES

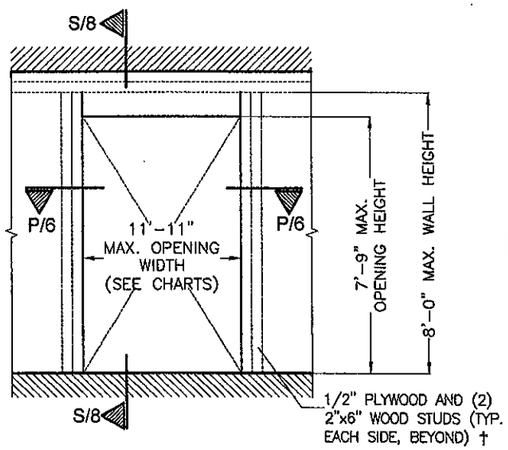

DETAIL 1 (ELEVATION)

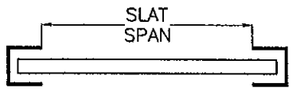

SLAT SPAN DEFINITION

PRODUCT REVISED as complying with the Florida Building Code Acceptance No 12-0315.13 Expiration Date 07/15/2014 By Miami Dade Product Control

WALTER A. TILLIT JR. LICENSE No. 44167 STATE OF FLORIDA PROFESSIONAL ENGINEER

MIAMI-DADE COUNTY — SEAL/SIGNATURE/DATE

FLORIDA BUILDING CODE. (High Velocity Hurricane Zone)

©2012 TILTECO INC.

TILTECO INC.
TILLIT TESTING & ENGINEERING COMPANY
8355 N.W. 36th. St., Ste. 303 ~ VIRGINIA GARDENS, Fl. 33166
Phone : (305) 871-1530 , Fax : (305) 871-1531
e-mail: tilteco@aol.com
EB-0006719
WALTER A. TILLIT Jr., P.E.
FLORIDA Lic. # 44167

RLL 55-X SLAT END RETENTION ROLL-UP HURRICANE ABATEMENT

ROLLAC SHUTTER OF TEXAS, INC.
5331 ORANGE STREET
PEARLAND, TX. 77581
PH:(281) 485-1911, FAX:(281) 485-0838

REV N°	DESCRIPTION	DATE	REV N°	DESCRIPTION	DATE
1	OLD 09-004	02/17/12	3		
2			4		

I.A./R.E./A.G. DRAWN BY

02/17/12 DATE

12-041 DRAWING N°

MAX. ANCHOR'S SPACING SCHEDULE VI FOR A GIVEN PRODUCT MOUNTING TYPE W/ ø 5/16" ITW BUILDEX TAPCON XL ANCHORS TO WOOD GRADE, A.S.D. DESIGN PRESSURE RATING (psf) AND SLAT SPAN RANGE *

WALL MOUNT
TO 2"x6" WOOD STUD WITH MINIMUM 1/2" PLYWOOD

(SEE DETAIL 1 ON SHEET 18)

WOOD GRADE	MAX. A.S.D DESIGN PRESSURE RATING RANGE	SLAT SPAN RANGE						
		0' to 4' *	> 4' to 5' *	> 5' to 6' *	> 6' to 7' *	> 7' to 9' *	> 9' to 10' *	> 10' to 11'-11"*
SOUTHERN PINE #2 (G=0.55)	≤ 30.0	6"	6"	6"	6"	6"	4"	3"
	40	6"	6"	6"	6"	4"	3"	3"
	50	6"	6"	6"	6"	3"	–	–
	60	6"	6"	6"	4"	3"	–	–
DOUGLAS–FIR–SOUTH (G=0.46)	≤ 30.0	6"	6"	6"	6"	5"	4"	3"
	40	6"	6"	6"	6"	4"	3"	–
SPRUCE PINE–FIR–SOUTH (G=0.36)	≤ 30.0	6"	6"	6"	6"	4"	3"	3"

BUILD-OUT MOUNT
TO 2"x6" WOOD STUD WITH MINIMUM 1/2" PLYWOOD

(SEE DETAIL 1 ON SHEET 18)

WOOD GRADE	MAX. A.S.D DESIGN PRESSURE RATING RANGE	SLAT SPAN RANGE						
		0' to 4' * BUILD–OUT MOUNT W/ (E2)	> 4' to 5' * BUILD–OUT MOUNT W/ (E2)	> 5' to 6' * BUILD–OUT MOUNT W/ (E2)	> 6' to 7' * BUILD–OUT MOUNT W/ (E2)	> 7' to 9' * BUILD–OUT MOUNT W/ (E2)	> 9' to 10' * BUILD–OUT MOUNT W/ (E2)	> 10' to 11'-11"* BUILD–OUT MOUNT W/ (E2)
SOUTHERN PINE #2 (G=0.55)	≤ 30.0	6"	6"	6"	6"	4"	3"	–
	40	6"	6"	6"	6"	3"	–	–
	50	6"	6"	6"	4"	3"	–	–
	60	6"	6"	6"	3"	3"	–	–
DOUGLAS–FIR–SOUTH (G=0.46)	≤ 30.0	6"	6"	6"	6"	3"	3"	–
	40	6"	6"	6"	5"	3"	–	–
SPRUCE PINE–FIR–SOUTH (G=0.36)	≤ 30.0	6"	6"	6"	6"	3"	–	–

* NOTE:
MAX. SPAN FOR SLAT FOR A GIVEN A.S.D. DESIGN PRESSURE RATING SHALL **NEVER** EXCEED MAX. SLAT SPAN INDICATED ON SLAT PERFORMANCE CHARTS ON SHEET 18.

FLORIDA BUILDING CODE. (High Velocity Hurricane Zone)

PRODUCT REVISED
as complying with the Florida Building Code
Acceptance No 12-0315.13
Expiration Date 07/15/2014
By
Miami Dade Product Control

MIAMI–DADE COUNTY

WALTER A. TILLIT JR. LICENSE No. 44167 STATE OF FLORIDA PROFESSIONAL ENGINEER

P.E. SEAL/SIGNATURE/DATE

©2012 TILTECO INC.

TILTECO INC.
TILLIT TESTING & ENGINEERING COMPANY
6965 N.W. 36th. St., Ste. 305 – VIRGINIA GARDENS, Fl. 33166
Phone : (305) 871–1530 , Fax : (305) 871–1531
e–mail: tilteco@aol.com
EB–0006719
WALTER A. TILLIT Jr., P.E.
FLORIDA Lic. # 44167

RLL 55-X SLAT END RETENTION
ROLL-UP HURRICANE ABATEMENT

ROLLAC SHUTTER OF TEXAS, INC.
5331 ORANGE STREET
PEARLAND, TX. 77581
PH:(281) 485-1911, FAX:(281) 485-0839

REV N°	DESCRIPTION	DATE	REV N°	DESCRIPTION	DATE
1	OLD 09–004	02/17/12	3		
2			4		

I.A./R.E./A.G.
DRAWN BY

02/17/12
DATE

12–041
DRAWING N°