MIAMI-DADE COUNTY
DEPARTMENT OF PERMITTING, ENVIRONMENT, AND REGULATORY AFFAIRS (PERA)
BOARD AND CODE ADMINISTRATION DIVISION

MIAMI-DADE COUNTY
PRODUCT CONTROL SECTION
11805 SW 26 Street, Room 208
Miami, Florida 33175-2474
T (786) 315-2590 F (786) 315-2599
www.miamidade.gov/pera

NOTICE OF ACCEPTANCE (NOA)

Hartman Windows and Doors, LLC
531 Southern Blvd.
West Palm Beach, FL 33405

SCOPE:

This NOA is being issued under the applicable rules and regulations governing the use of construction materials. The documentation submitted has been reviewed and accepted by Miami-Dade County PERA - Product Control Section to be used in Miami Dade County and other areas where allowed by the Authority Having Jurisdiction (AHJ).

This NOA shall not be valid after the expiration date stated below. The Miami-Dade County Product Control Section (In Miami Dade County) and/or the AHJ (in areas other than Miami Dade County) reserve the right to have this product or material tested for quality assurance purposes. If this product or material fails to perform in the accepted manner, the manufacturer will incur the expense of such testing and the AHJ may immediately revoke, modify, or suspend the use of such product or material within their jurisdiction. PERA reserves the right to revoke this acceptance, if it is determined by Miami-Dade County Product Control Section that this product or material fails to meet the requirements of the applicable building code.

This product is approved as described herein, and has been designed to comply with the Florida Building Code, including the High Velocity Hurricane Zone.

DESCRIPTION: Series "European Mahogany Arch Top" Wood Fixed Window – L.M.I.

APPROVAL DOCUMENT: Drawing No. **06-HWD-0009**, titled "European Series Mahogany Arch Top Fixed Windows – Large Missile Impact Resistant", sheets 1 through 12 of 12, dated 10/18/06, with revision dated 01/25/12, prepared by Engineering Express, signed and sealed by Frank L. Bennardo, P.E., bearing the Miami-Dade County Product Control Revision stamp with the Notice of Acceptance number and expiration date by the Miami-Dade County Product Control Section.

MISSILE IMPACT RATING: Large and Small Missile Impact Resistant

LABELING: Each unit shall bear a permanent label with the manufacturer's name or logo, city, state, model/series, and following statement: "Miami-Dade County Product Control Approved", unless otherwise noted herein.

RENEWAL of this NOA shall be considered after a renewal application has been filed and there has been no change in the applicable building code negatively affecting the performance of this product.

TERMINATION of this NOA will occur after the expiration date or if there has been a revision or change in the materials, use, and/or manufacture of the product or process. Misuse of this NOA as an endorsement of any product, for sales, advertising or any other purposes shall automatically terminate this NOA. Failure to comply with any section of this NOA shall be cause for termination and removal of NOA.

ADVERTISEMENT: The NOA number preceded by the words Miami-Dade County, Florida, and followed by the expiration date may be displayed in advertising literature. If any portion of the NOA is displayed, then it shall be done in its entirety.

INSPECTION: A copy of this entire NOA shall be provided to the user by the manufacturer or its distributors and shall be available for inspection at the job site at the request of the Building Official.

This NOA **revises and renews NOA# 06-1030.07** and consists of this page 1 and evidence pages E-1 and E-2, as well as approval document mentioned above.

The submitted documentation was reviewed by **Manuel Perez, P.E.**

MIAMI-DADE COUNTY APPROVED

7/12/12

Hartman Windows and Doors, LLC

NOTICE OF ACCEPTANCE: EVIDENCE SUBMITTED

A. DRAWINGS

1. Manufacturer's die drawings and sections.
2. Drawing No **06-HWD-0009**, Sheets 1 through 12 of 12, titled "European Series Mahogany Arch Top Fixed Windows – Large Missile Impact Resistant", dated 10/18/07, with revision dated 01/25/12, prepared by Engineering Express, signed and sealed by Frank Bennardo, P.E.

B. TESTS

1. Test reports on: 1) Air Infiltration Test, per FBC, TAS 202-94
   2) Uniform Static Air Pressure Test, Loading per FBC TAS 202-94
   3) Water Resistance Test, per FBC, TAS 202-94
   4) Large Missile Impact Test per FBC, TAS 201-94
   5) Cyclic Wind Pressure Loading per FBC, TAS 203-94

   along with marked-up drawings and installation diagram of an "European Series Mahogany Arch - Top" wood fixed window, prepared by Hurricane Testing Laboratory, LLC., Test Report No. **HTL-0137-0714-05**, dated 09/20/05, signed and sealed by Vinu J. Abraham, P.E.
   (Submitted under previous NOA# 06-1030.07)

C. CALCULATIONS

1. Anchor verification calculations and structural analysis, complying with FBC-2004, prepared by Express Engineering, dated 10/17/06, signed and sealed by Frank L. Bennardo, P.E.
   (Submitted under previous NOA# 06-1030.07)
2. Glazing complies with ASTM E1300-04

D. QUALITY ASSURANCE

1. Miami-Dade Department of Permitting, Environment, and Regulatory Affairs (PERA)

E. MATERIAL CERTIFICATIONS

1. Notice of Acceptance No. **11–0325.05** issued to Solutia, Inc. for their "**Saflex and Vanceva clear and color interlayers**" dated 05/05/11, expiring on 05/21/16
2. Notice of Acceptance No. **08–1224.04** issued to Solutia, Inc. for their "**Saflex Composites Glass Interlayer with PET Core**" dated 02/25/09, expiring on 12/11/13.

Manuel Perez, P.E.
Product Control Examiner
NOA No. 12-0319.02
Expiration Date: March 22, 2017
Approval Date: July 12, 2012

NOTICE OF ACCEPTANCE: EVIDENCE SUBMITTED

F. STATEMENTS

1. Statement letter of conformance, complying with FBC 2010, dated March 15, 2012, signed and sealed by Frank L. Bennardo, P.E.
2. Statement letter of no financial interest, dated March 15, 2012, signed and sealed by Frank L. Bennardo, P.E.
3. Laboratory compliance letter for Test Report No. **HTL-0137-0714-05**, issued by Hurricane Test Laboratory, LLC, dated 02/27/06, signed and sealed by Vinu J. Abraham, P.E.
   (Submitted under previous NOA# 06-1030.07)

G. OTHERS

1. Notice of Acceptance No. **06-1030.07**, issued to Hartman Windows and Doors, LLC for their Series "European Series Mahogany Arch-Top" Wood Fixed Window – L.M.I. & S.M.I., approved on 03/22/07 and expiring on 03/12/12.

Manuel Perez, P.E.
Product Control Examiner
NOA No. 12-0319.02
Expiration Date: March 22, 2017
Approval Date: July 12, 2012

EUROPEAN SERIES
MAHOGANY ARCH-TOP FIXED WINDOWS

LARGE MISSILE IMPACT RESISTANT

GENERAL NOTES

1. THE SYSTEM DESCRIBED HEREIN HAS BEEN DESIGNED AND TESTED IN ACCORDANCE WITH THE 2010 FLORIDA BUILDING CODE, FOR USE WITHIN THE HIGH VELOCITY HURRICANE ZONE, PER TAS 201 / 202 / 203 & ASTM E1300 STANDARDS.
2. NO 33-1/3% INCREASE IN ALLOWABLE STRESS HAS BEEN USED IN THE DESIGN OF THIS SYSTEM. WIND LOAD DURATION FACTOR Cd=1.6 HAS BEEN USED FOR WOOD ANCHOR DESIGN.
3. POSITIVE AND NEGATIVE DESIGN PRESSURES CALCULATED FOR USE WITH THIS SYSTEM SHALL BE DETERMINED PER SEPARATE ENGINEERING IN ACCORDANCE WITH THE GOVERNING CODE. PRESSURE REQUIREMENTS AS DETERMINED IN ACCORDANCE WITH ASCE 7-10 AND CHAPTER 1609 OF THE 2010 FLORIDA BUILDING CODE SHALL BE LESS THAN OR EQUAL TO THE POSITIVE OR NEGATIVE DESIGN PRESSURE CAPACITY VALUES LISTED HEREIN FOR ANY ASSEMBLY AS SHOWN.
4. DESIGN PRESSURES NOTED HEREIN ARE BASED ON MAXIMUM TESTED PRESSURES DIVIDED BY A 1.5 SAFETY FACTOR.
5. MULTIPLE UNITS MUST BE INSTALLED USING MIAMI-DADE COUNTY PERMITTING, ENVIRONMENT AND REGULATORY AFFAIRS (PERA) APPROVED STRUCTURAL MULLIONS.
6. THE SYSTEM DETAILED HEREIN IS GENERIC AND DOES NOT PROVIDE INFORMATION FOR A SPECIFIC SITE. FOR SITE CONDITIONS DIFFERENT FROM THE CONDITIONS DETAILED HEREIN, A LICENSED ENGINEER OR REGISTERED ARCHITECT SHALL PREPARE SITE SPECIFIC DOCUMENTS AND SUBMIT FOR A ONE-TIME NOTICE OF ACCEPTANCE FOR USE IN CONJUNCTION WITH THIS DOCUMENT.
7. PERMIT HOLDER SHALL VERIFY THE ADEQUACY OF THE EXISTING STRUCTURE TO WITHSTAND SUPERIMPOSED LOADS. WOOD BUCKS (BY OTHERS) SHALL BE ANCHORED PROPERLY TO TRANSFER LOADS TO THE EXISTING STRUCTURE.
8. UNITS GLAZED WITH 7/16" or 9/16" LAMINATED GLASS ARE LARGE MISSILE IMPACT RESISTANT AND DO NOT REQUIRE IMPACT RESISTANT SHUTTERS. LAMINATED GLAZING INTERLAYERS SHALL BE AS SPECIFIED IN THEIR RESPECTIVE CURRENT NOTICE OF ACCEPTANCE.
9. UNITS INSTALLED WITH SOLID WOOD PANELS OR PLYWOOD INFILLS ARE ALSO LARGE MISSILE IMPACT RESISTANT. SEE GLAZING SCHEDULE FOR GLAZING/INFILL SPECIFICATIONS.
10. EXTERIOR SEAM OF FRAME CORNERS SHALL BE SEALED WITH SILICONE.
11. ALL STEEL IN CONTACT WITH ALUMINUM SHALL BE PAINTED OR PLATED.

GLAZING/INFILL SCHEDULE:

REFER TO GLAZING DETAILS BELOW FOR DEPICTION OF EACH GLAZING/INFILL TYPE

A	**7/16" SAFLEX:** 3/16" ANN - 0.090" SOLUTIA SAFLEX IIIG PVB - 3/16" ANN
B	**9/16" VANCEVA:** 1/4" ANN - 0.075" SOLUTIA VANCEVA - 1/4" ANN
C	**1 1/4" VANCEVA INSULATED:** 3/16" ANN - 0.075" SOLUTIA VANCEVA - 3/16" ANN + 1/2" AIR GAP + 3/16" TEMP
D	**1 3/4" MAHOGANY PANEL:** RAISED MAHOGANY WOOD PANEL
E	**3/4" MAHOGANY PLYWOOD:** MARINE-GRADE MAHOGANY PLYWOOD

NOTE: ALLOWABLE PRESSURES MAY VARY BASED ON GLAZING/INFILL TYPE FOR EACH CONFIGURATION SHOWN HEREIN. SEE APPROPRIATE CONFIGURATION ELEVATION FOR ALLOWABLE PRESSURE SCHEDULE.

ANCHOR SCHEDULE:

TO HOLLOW BLOCK OR CONCRETE:
- 1/4" ITW TAPCONS THRU 1x WOOD BUCKS OR DIRECTLY INTO CONC (MIN 3.0 KSI) OR MASONRY (MIN 1.5 KSI)WITH 1-3/4" MIN EMBED.

TO WOOD BUCK OR HOST STRUCTURE:
- #12 WOOD SCREWS WITH 1-1/2" MIN THREAD PENETRATION.
- (2) #10 WOOD SCREWS WITH 1-1/2" MIN THREAD PENETRATION.

ANCHOR NOTES:

1. SEE ANCHORAGE DIAGRAMS FOR ANCHOR LOCATIONS AND/OR SPACING.
2. ANCHORS SHALL BE INSTALLED IN ACCORDANCE WITH MANUFACTURERS' MOST CURRENT RECOMMENDATIONS.
3. TAPCONS SHALL BE MANUFACTURED BY ITW.
4. ENSURE MINIMUM 2-1/2" EDGE DISTANCE FOR ALL ANCHORS TO CONCRETE.
5. FOR ANCHORS TO WOOD FRAMING, 7/8" MIN EDGE DISTANCE SHALL BE MAINTAINED. WOOD HOST STRUCTURE SHALL BE "SOUTHERN PINE" G=0.55 OR GREATER DENSITY.
6. MINIMUM EMBEDMENT SHALL BE AS NOTED IN ANCHOR SCHEDULE. MINIMUM EMBEDMENT AND EDGE DISTANCE EXCLUDES STUCCO, FOAM, BRICK, AND OTHER WALL FINISHES.
7. WHERE EXISTING STRUCTURE IS WOOD FRAMING, EXISTING CONDITIONS MAY VARY. FIELD VERIFY THAT FASTENERS ARE INTO ADEQUATE WOOD FRAMING MEMBERS, NOT INTO PLYWOOD.
8. WOOD BUCKS (BY OTHERS) SHALL BE ANCHORED PROPERLY TO TRANSFER LOADS TO THE EXISTING STRUCTURE.

PRODUCT REVISED
as comptying with the Florida Building Code
Acceptance No 12-0319.02
Expiration Date March 22, 2017
By Manuel Perez
Miami Dade Product Control

GLAZING DETAILS

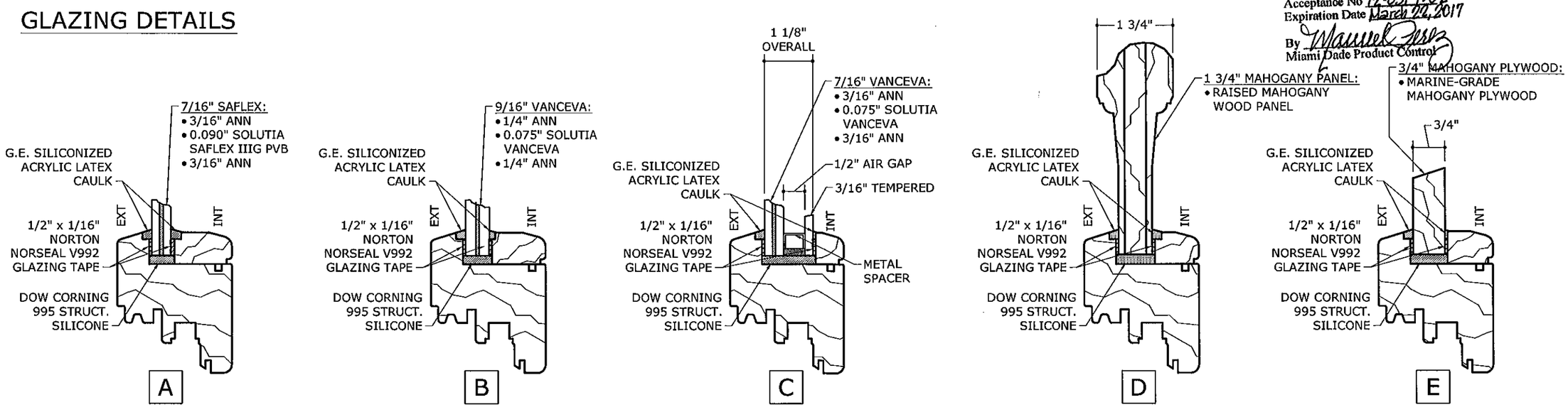

FRANK L. BENNARDO, P.E.
LICENSE NO. PE0046549
STATE OF FLORIDA PROFESSIONAL ENGINEER
03/15/2012
ENGINEERING EXPRESS®
160 SW 12th AVENUE, #106
DEERFIELD BEACH, FL 33442
Ph: (954) 354-0660 Fax: (954) 354-0443
WWW.ENGEXP.COM
CERT OF AUTH #8685
A FRANK L. BENNARDO, P.E., INC. INNOVATION

HARTMAN WINDOWS & DOORS, LLC
531 SOUTHERN BOULEVARD
WEST PALM BEACH, FL 33405

'EUROPEAN SERIES' MAHOGANY ARCH-TOP FIXED WINDOWS LARGE MISSILE IMPACT RESISTANT

REMARKS	DRWN	CHKD	DATE
INITIAL ISSUE	CL	FLB	10/18/06
BCCO COMMENTS	CL	FLB	1/27/07
2010 FBC	KL	FLB	01/25/12

06-HWD-0009

SCALE: - 03

PAGE DESCRIPTION:

12

1

03/15/2012 - 11:45am keith! F:\01 Project Files\Hartman Windows & Doors (HWD)\2006 Jobs\06-HWD-0009 European Fixed Window, LMI (NOA)\06-HWD-0009_03a European Fixed Window, LMI (NOA).dwg

ALLOWABLE PRESSURE SCHEDULE

GLAZING / INFILL TYPE	WINDOW OR TRANSOM FRAME SIZE	ALLOWABLE PRESSURES	
A	36" x 96"	+ 65.5 PSF	- 65.5 PSF
	42" x 96"	+ 48.5 PSF	- 48.5 PSF
	48" x 120"	+ 33.4 PSF	- 33.4 PSF
B	42" x 96"	+ 70 PSF	- 70 PSF
	48" x 120"	+ 58.0 PSF	- 58.0 PSF
C	36" x 96"	+ 70 PSF	- 70 PSF
	42" x 96"	+ 51.9 PSF	- 51.9 PSF
	48" x 120"	+ 35.7 PSF	- 35.7 PSF
D	48" x 120"	+ 70 PSF	- 70 PSF
E	48" x 120"	+ 70 PSF	- 70 PSF

WINDOW CORNER CONSTRUCTION:

SASH / SASH : MULTI-FORK MORTISE AND TENON JOINERY SECURED WITH NATIONAL CASEINE OR TITE BOND WATERPROOF GLUE.

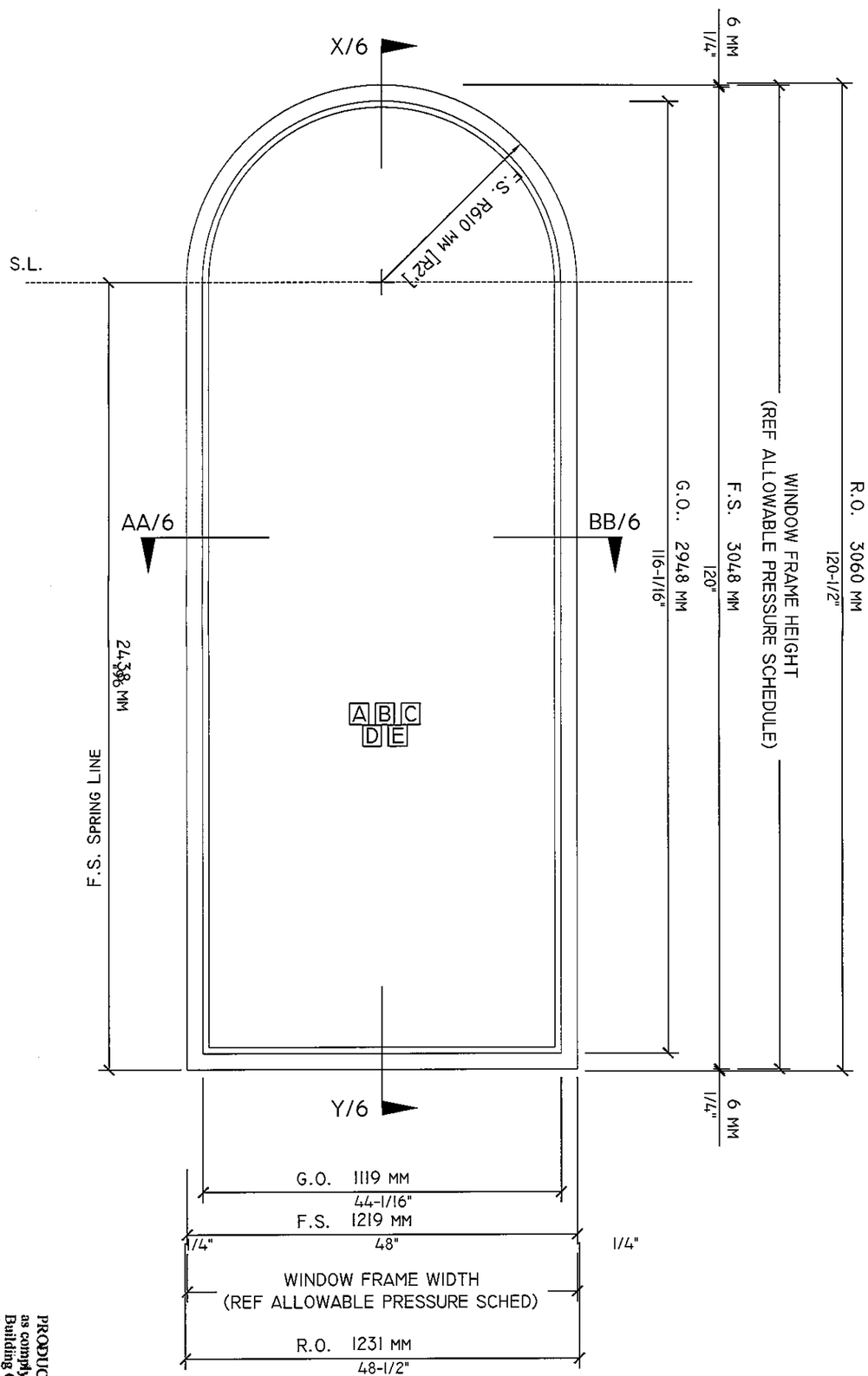

EXTERIOR ELEVATION

SASH ONLY / DIRECT GLAZED WINDOW

PRODUCT REVISED as complying with the Florida Building Code
Acceptance No 12-0319.02
Expiration Date March 22, 2017
By Manuel Diaz
Miami Dade Product Control

REMARKS	DRWN	CHKD	DATE
INITIAL ISSUE	CL	FLB	10/18/06
BCCO COMMENTS	CL	FLB	1/27/07
2010 FBC	KL	FLB	01/25/12
-	-	-	-
-	-	-	-

HARTMAN WINDOWS & DOORS, LLC
531 SOUTHERN BOULEVARD
WEST PALM BEACH, FL 33405

'EUROPEAN SERIES' MAHOGANY
ARCH-TOP FIXED WINDOWS
LARGE MISSILE IMPACT RESISTANT

ENGINEERING EXPRESS
160 SW 12th AVENUE #106
DEERFIELD BEACH, FL 33442
PH: (954) 354-0660 FAX: (954) 354-0443
WWW.ENGEXP.COM
CERT OF AUTH #9885
A FRANK L. BENNARDO, P.E., INC. INNOVATION

PROFESSIONAL ENGINEER
STATE OF FLORIDA
FRANK L. BENNARDO, P.E.
LICENSE NO. 40349
03/15/2012

SCALE: - 03
PAGE DESCRIPTION:
06-HWD-0009
2
12

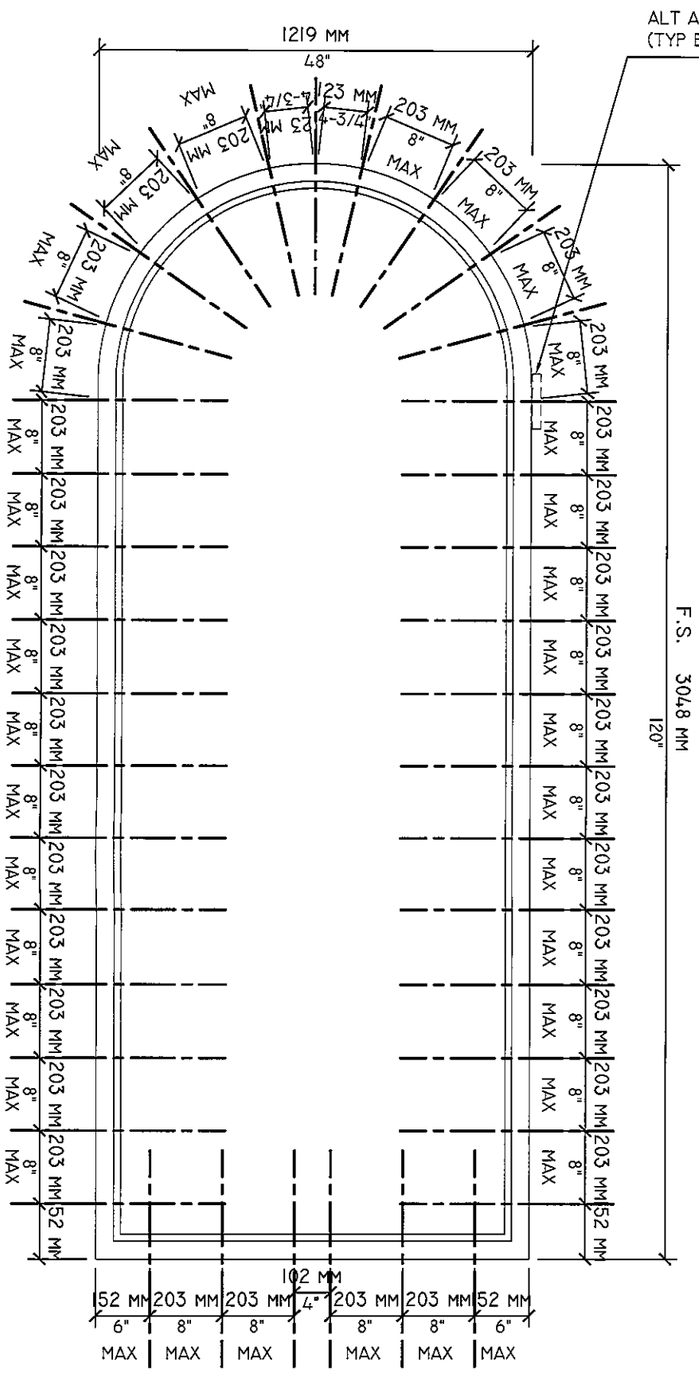

INSTALLATION DIAGRAM

SASH ONLY / DIRECT GLAZED

ALTERNATE INSTALLATION METHODS:

1. PROVIDE (2) #10 X 1-¾" S.S. PAN HEAD SCREWS PER LOCATION INDICATED FOR WOOD SUBSTRATE. SCREW THROUGH STEEL CLIP INTO WOOD BUCK WITH MIN. PENETRATION 1½", SPACED AS INDICATED. SEE SECTION DETAILS FOR DETAILS.

2. PROVIDE (2) #10 X 2" S.S. PAN HEAD SCREWS PER LOCATION INDICATED FOR WOOD SUBSTRATE. SCREW THROUGH 1½" X 1½" X ⅛" ALUMINUM ANGLE INTO WOOD BUCK WITH MIN. 1¾" PENETRATION, SPACED AS INDICATED. SEE SECTION DETAILS FOR DETAILS.

3. PROVIDE (1) #12 X 3½" S.S. SCREW PER LOCATION INDICATED. SCREW THROUGH HOLES IN JAMB INTO WOOD BUCK SPACED AS INDICATED. SEE SECTION DETAILS FOR DETAILS.

NOTE: IF LESS THAN 2 X 6 BUCK IS USED AROUND OPENING, ¼" TAPCONS SHALL BE USED, RUNNING THROUGH THE JAMB, SHIM, BUCK, & INTO THE BLOCK / CONCRETE WITH MIN. EMBEDMENT 1¼".

FRAME SCREW & STRAP REQUIREMENTS			
FASTENER	SUBSTRATE	MIN. EMBED	MIN. EDGE DISTANCE
No. 10 x 1-3/4"	WOOD	1 1/2"	6"
#10 X 2"	WOOD	1 3/4"	6"
#12 X 3 1/2"	WOOD	1 1/2"	6"
1/4" x 3-1/2" TAPCON	BLOCK/CONCR.	1 1/4"	6"

PRODUCT REVISED
as complying with the Florida
Building Code
Acceptance No 12-0319.02
Expiration Date March 22, 2017
By Manuel Perez
Miami Dade Product Control

REMARKS	DRWN	CHKD	DATE
INITIAL ISSUE	CL	FLB	10/18/06
BCCO COMMENTS	CL	FLB	1/27/07
2010 FBC	KL	FLB	01/25/12
-	-	-	-
-	-	-	-

06-HWD-0009
SCALE: 03
PAGE DESCRIPTION:

HARTMAN WINDOWS & DOORS, LLC
531 SOUTHERN BOULEVARD
WEST PALM BEACH, FL 33405

'EUROPEAN SERIES' MAHOGANY
ARCH-TOP FIXED WINDOWS
LARGE MISSILE IMPACT RESISTANT

ENGINEERING EXPRESS
160 SW 12th AVENUE #106
DEERFIELD BEACH, FL 33442
PH: (954) 354-0660 FAX: (954) 354-0443
WWW.ENGEXP.COM
CERT OF AUTH #9885
A FRANK L. BENNARDO, P.E., INC. INNOVATION

3

12

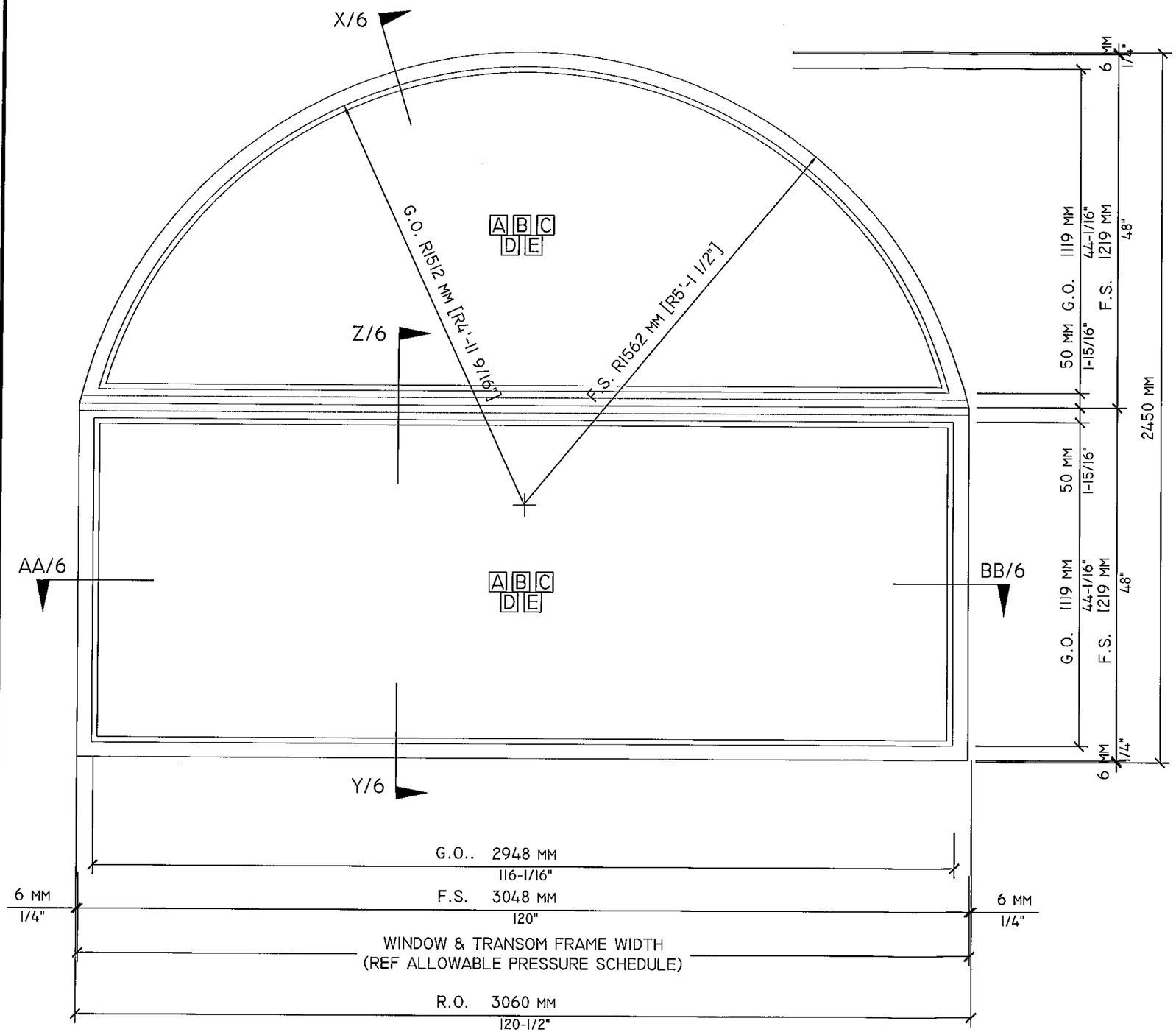

EXTERIOR ELEVATION

SASH ONLY / DIRECT GLAZED W/ ARCHED TRANSOM

ALLOWABLE PRESSURE SCHEDULE

GLAZING / INFILL TYPE	WINDOW OR TRANSOM FRAME SIZE [W x H]	ALLOWABLE PRESSURES	
A	96" x 36"	+ 65.5 PSF	- 65.5 PSF
	96" x 42"	+ 48.5 PSF	- 48.5 PSF
	120" x 48"	+ 33.4 PSF	- 33.4 PSF
B	96" x 42"	+ 70 PSF	- 70 PSF
	120" x 48"	+ 58.0 PSF	- 58.0 PSF
C	96" x 36"	+ 70 PSF	- 70 PSF
	96" x 42"	+ 51.9 PSF	- 51.9 PSF
	120" x 48"	+ 35.7 PSF	- 35.7 PSF
D	120" x 48"	+ 70 PSF	- 70 PSF
E	120" x 48"	+ 70 PSF	- 70 PSF

WINDOW CORNER CONSTRUCTION:

FRAME / FRAME : MULTI-FORK MORTISE AND TENON JOINERY SECURED WITH NATIONAL CASEINE OR TITE BOND WATERPROOF GLUE.

PRODUCT REVISED
as complying with the Florida
Building Code
Acceptance No 12-0319.02
Expiration Date March 22, 2017
By Manuel Perez
Miami/Dade Product Control

FRANK L. BENNARDO, P.E.
PE0046549
FRANK L. BENNARDO
03/15/2012
No. 46549
STATE OF FLORIDA
PROFESSIONAL ENGINEER

ENGINEERING EXPRESS
160 SW 12th AVENUE, #106
DEERFIELD BEACH, FL 33442
PH: (954) 354-0660 FAX: (954) 354-0443
WWW.ENGEXP.COM
CERT OF AUTH #9885
A FRANK L. BENNARDO, P.E., INC. INNOVATION

HARTMAN WINDOWS & DOORS, LLC
531 SOUTHERN BOULEVARD
WEST PALM BEACH, FL 33405

'EUROPEAN SERIES' MAHOGANY
ARCH-TOP FIXED WINDOWS
LARGE MISSILE IMPACT RESISTANT

REMARKS	DRWN	CHKD	DATE
INITIAL ISSUE	CL	FLB	10/18/06
BCCO COMMENTS	CL	FLB	1/27/07
2010 FBC	KL	FLB	01/25/12
-	-	-	-
-	-	-	-

06-HWD-0009
SCALE: - 03
PAGE DESCRIPTION:
-
-
12
4

F:\01 Project Files\Hartman Windows & Doors (HWD)\2006 Jobs\06-HWD-0009 European Fixed Window, LMI (NOA)\06-HWD-0009_03a European Fixed Window, LMI (NOA).dwg
03/15/2012 - 11:45am keithl

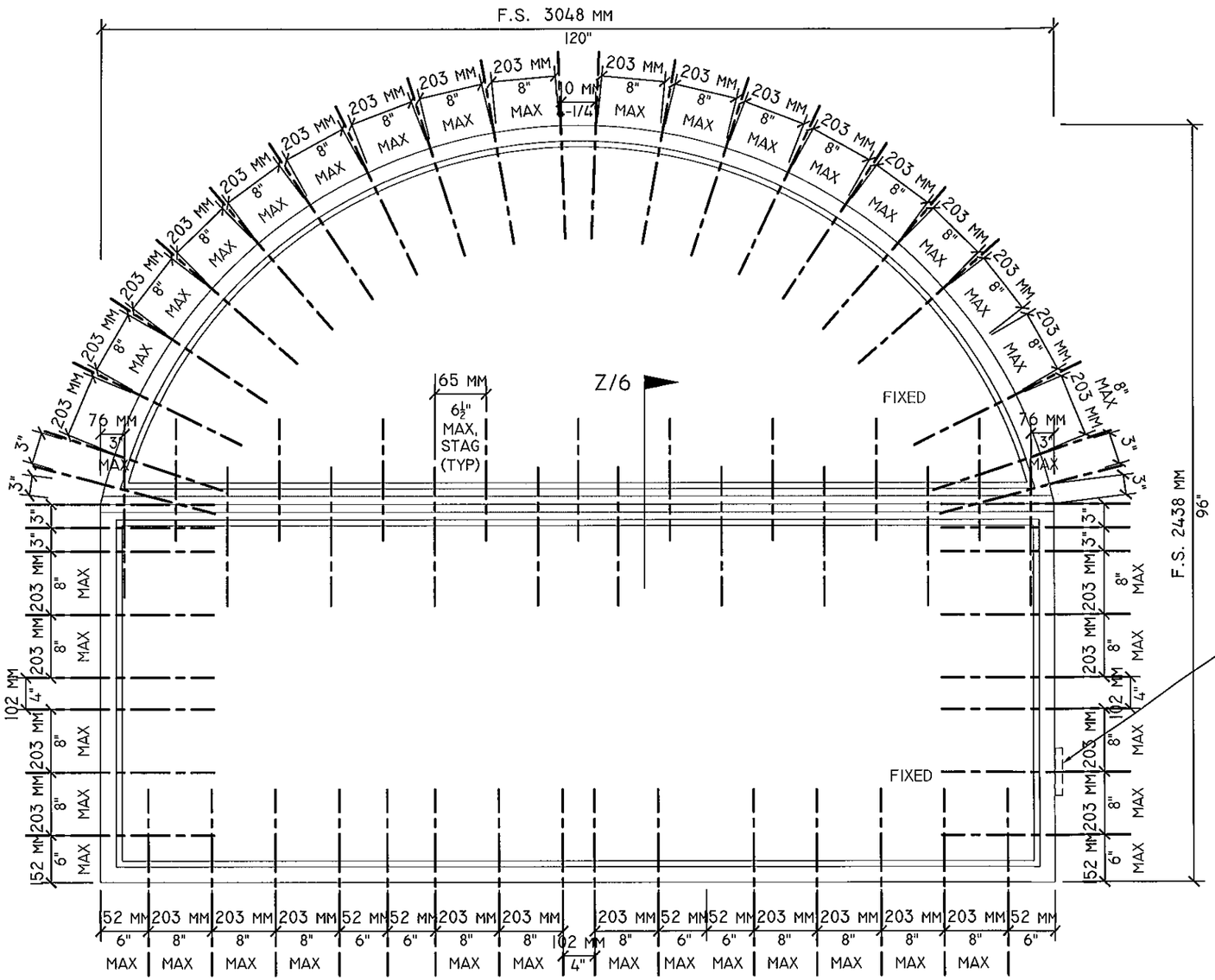

INSTALLATION DIAGRAM
SASH ONLY / DIRECT GLAZED W/ ARCHED TRANSOM

ALT ANCHOR METHOD #2 DEPICTED
(TYP EACH ANCHOR LOCATION)

ALTERNATE INSTALLATION METHODS:

1. PROVIDE (2) #10 X 1-¾" S.S. PAN HEAD SCREWS PER LOCATION INDICATED FOR WOOD SUBSTRATE. SCREW THROUGH STEEL CLIP INTO WOOD BUCK WITH MIN. PENETRATION 1½", SPACED AS INDICATED. SEE SECTION DETAILS FOR DETAILS.

2. PROVIDE (2) #10 X 2" S.S. PAN HEAD SCREWS PER LOCATION INDICATED FOR WOOD SUBSTRATE. SCREW THROUGH 1½" X 1½" X ⅛" ALUMINUM ANGLE INTO WOOD BUCK WITH MIN. 1¾" PENETRATION, SPACED AS INDICATED. SEE SECTION DETAILS FOR DETAILS.

3. PROVIDE (1) #12 X 3½" S.S. SCREW PER LOCATION INDICATED. SCREW THROUGH HOLES IN JAMB INTO WOOD BUCK SPACED AS INDICATED. SEE SECTION DETAILS FOR DETAILS.

NOTE: IF LESS THAN 2 X 6 BUCK IS USED AROUND OPENING, ¼" TAPCONS SHALL BE USED, RUNNING THROUGH THE JAMB, SHIM, BUCK, & INTO THE BLOCK / CONCRETE WITH MIN. EMBEDMENT 1¼".

FRAME SCREW & STRAP REQUIREMENTS			
FASTENER	SUBSTRATE	MIN. EMBED	MIN. EDGE DISTANCE
No. 10 x 1-3/4"	WOOD	1 1/2"	6"
#10 x 2"	WOOD	1 3/4"	6"
#12 x 3 1/2"	WOOD	1 1/2"	6"
1/4" x 3-1/2" TAPCON	BLOCK/CONCR.	1 1/4"	6"

PRODUCT REVISED
as complying with the Florida
Building Code
Acceptance No 12-0319.02
Expiration Date March 22, 2017
By Manuel Perez
Miami Dade Product Control

FRANK L. BENNARDO, P.E.
#PE0046549
FRANK L. BENNARDO
03/15/2012
No. 46549
STATE OF FLORIDA
PROFESSIONAL ENGINEER

ENGINEERING EXPRESS
160 SW 12th AVENUE, #101
DEERFIELD BEACH, FL 33442
Ph: (954) 354-0660 Fax: (954) 354-0443
WWW.ENGEXP.COM
CERT OF AUTH #8885
A FRANK L. BENNARDO, P.E., INC. INNOVATION

HARTMAN WINDOWS & DOORS, LLC
531 SOUTHERN BOULEVARD
WEST PALM BEACH, FL 33405

'EUROPEAN SERIES' MAHOGANY
ARCH-TOP FIXED WINDOWS
LARGE MISSILE IMPACT RESISTANT

REMARKS	DRWN	CHKD	DATE
INITIAL ISSUE	CL	FLB	10/18/06
BCCO COMMENTS	CL	FLB	1/27/07
2010 FBC	KL	FLB	01/25/12

06-HWD-0009
SCALE: - 03
PAGE DESCRIPTION:
12
5

F:\01 Project Files\Hartman Windows & Doors (HWD)\2006 Jobs\06-HWD-0009 European Fixed Window, LMI (NOA)\06-HWD-0009_03a European Fixed Window, LMI (NOA).dwg
03/15/2012 - 11:45am keithl

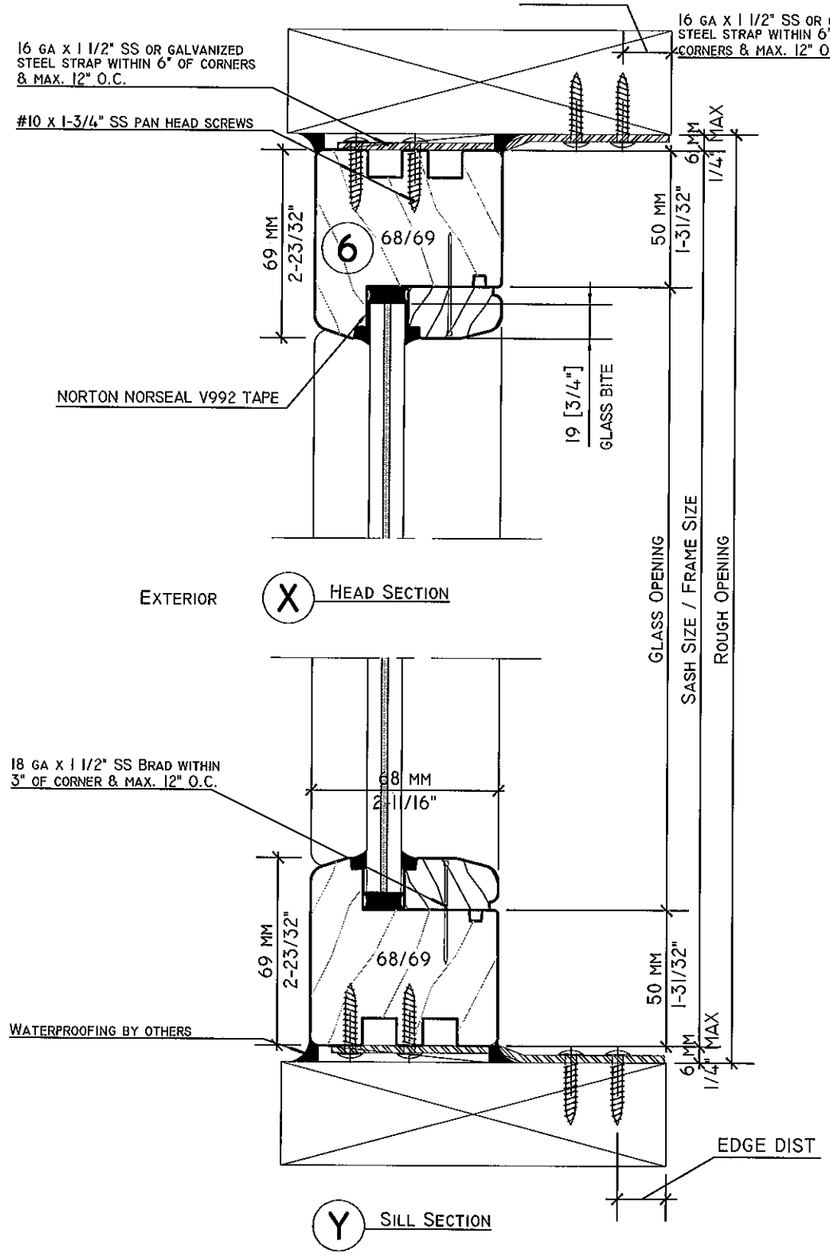

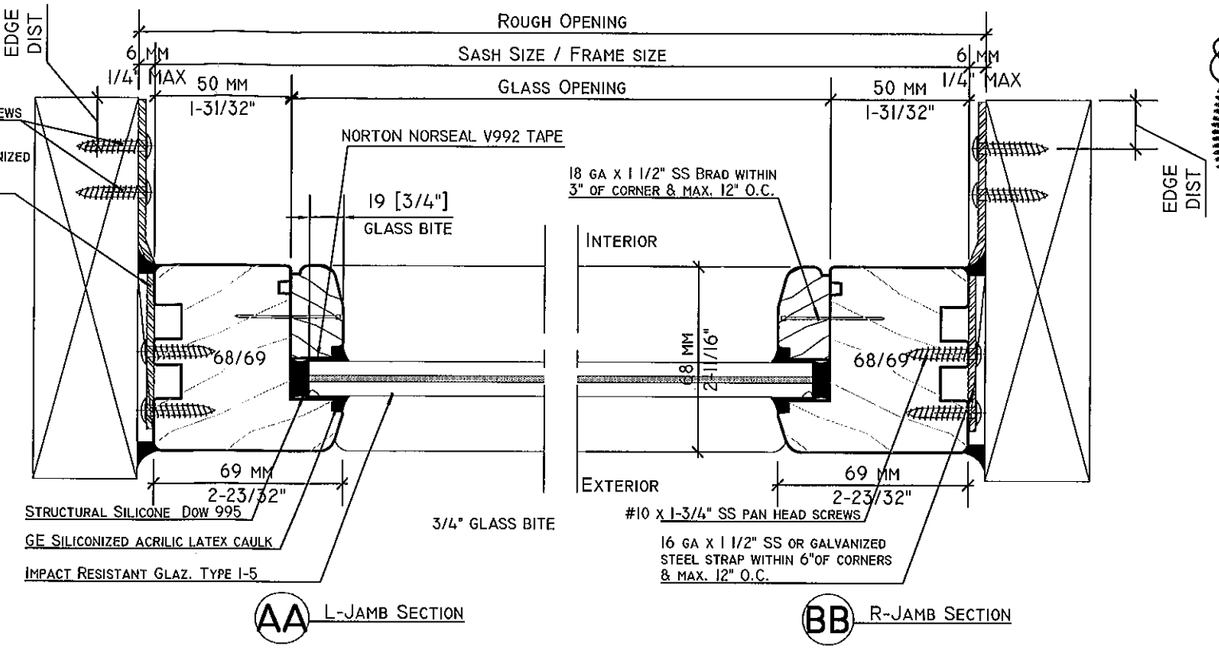

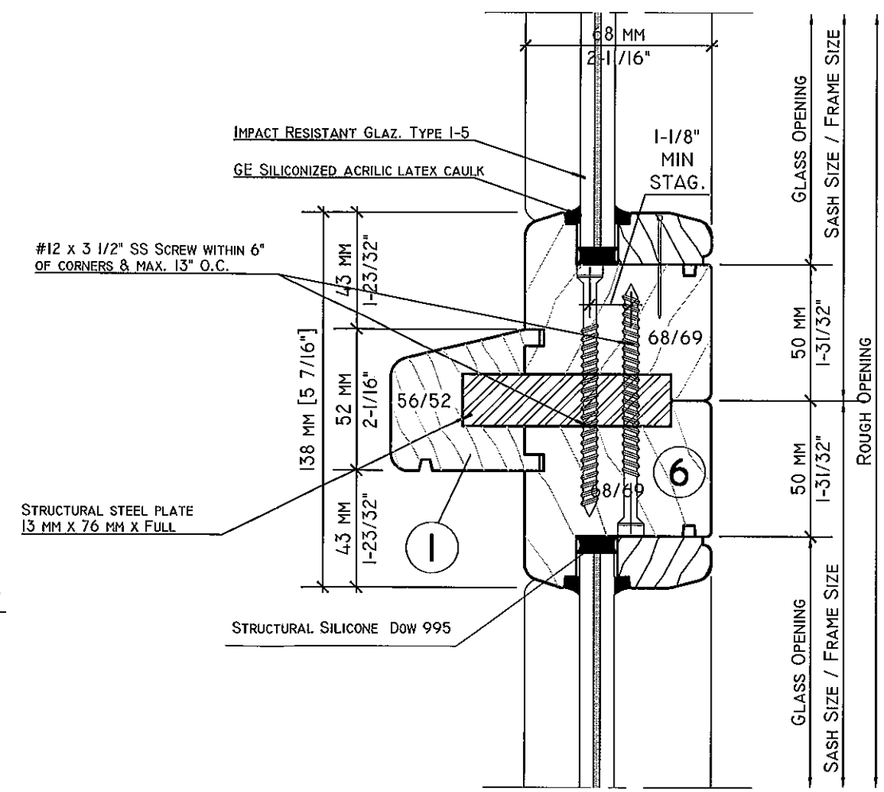

PRODUCT REVISED
as complying with the Florida Building Code
Acceptance No 12-0319.02
Expiration Date March 22, 2017
By Manuel Perez
Miami Dade Product Control

FRANK L. BENNARDO, P.E.
LICENSE No. 46549
STATE OF FLORIDA
03/15/2012
ENGINEERING EXPRESS®
160 SW 12th AVENUE
DEERFIELD BEACH, FL 33442
Ph: (954) 354-0660 Fax: (954) 354-0635
WWW.ENGEXP.COM
CERT OF AUTH #8685
A. FRANK L. BENNARDO, P.E., INC. INNOVATION

HARTMAN WINDOWS & DOORS, LLC
531 SOUTHERN BOULEVARD
WEST PALM BEACH, FL 33405

'EUROPEAN SERIES' MAHOGANY ARCH-TOP FIXED WINDOWS LARGE MISSILE IMPACT RESISTANT

REMARKS	DRWN	CHKD	DATE
INITIAL ISSUE	CL	FLB	10/18/06
BCCO COMMENTS	CL	FLB	1/27/07
2010 FBC	KL	FLB	01/25/12
-	-	-	-
-	-	-	-

06-HWD-0009

SCALE: - 03

PAGE DESCRIPTION:
-
-

12

6

03/15/2012 - 11:45am keithl F:\01 Project Files\Hartman Windows & Doors (HWD)\2006 Jobs\06-HWD-0009 European Fixed Window, LMI (NOA)\06-HWD-0009_03a European Fixed Window, LMI (NOA).dwg

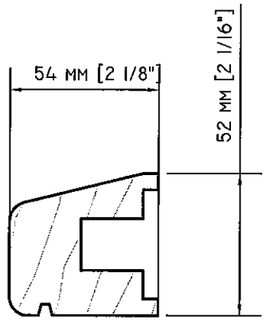

1. Drip Cap/Steel Cover

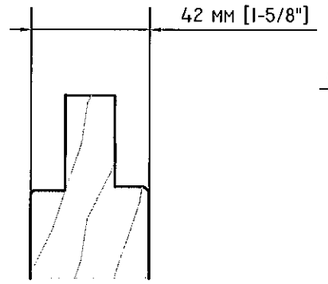

2. Copper Clad Panel

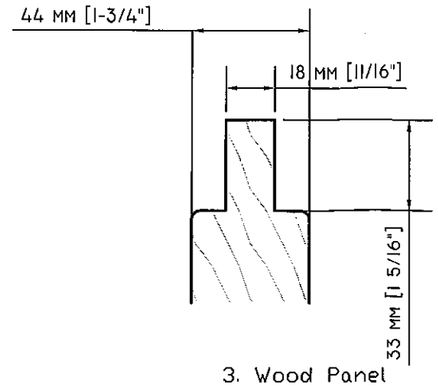

3. Wood Panel

MATERIALS LIST		
ITEM	DESCRIPTION	REMARKS/SUPPLIER
1	Drip Cap/Steel Cover	Mahogany or equal
2	Copper Clad Panel	Mahogany or equal
3	Wood Panel	Mahogany or equal
4	Glazing Bead	Mahogany or equal
5	I.G. Glazing Bead	Mahogany or equal
6	Drain Channel (Aluminum)	Proprietary
–	–	
8	Fixed Sash Blocking	Mahogany or equal
9	Mull Spline	Mahogany or equal
10	Astragal Cap	Mahogany or equal
11	Head/Jamb Copper Profile	Proprietary
12	Panel Edge Copper Profile	Proprietary
13	Lock Rail Copper Profile	Proprietary
14	Sash Copper Profile	Proprietary
15	Sill Copper Profile	Proprietary
16	Glazing Bead	Mahogany or equal
17	Direct Glazed Sash	Mahogany or equal

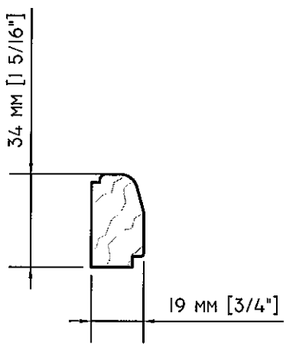

4. Glazing Bead

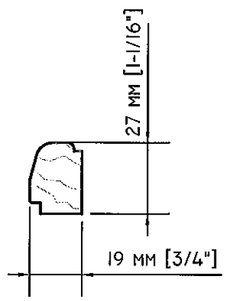

16. Glazing Bead

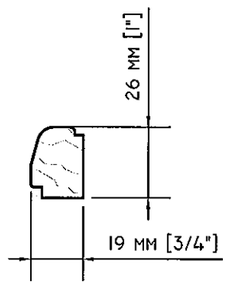

5. I.G. Glazing Bead

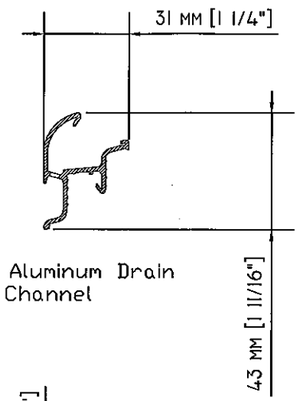

6. Aluminum Drain Channel

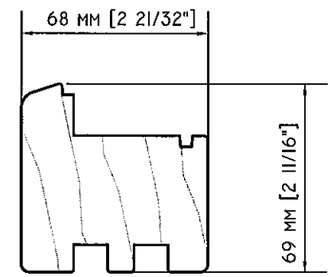

17. Direct Glazed Sash

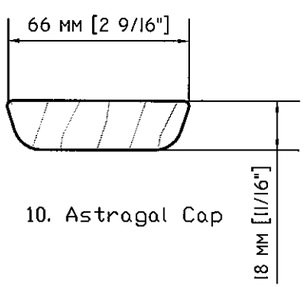

10. Astragal Cap

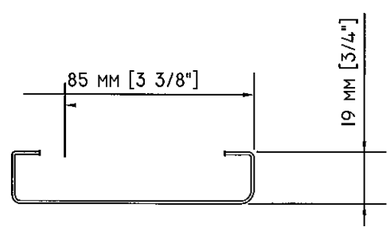

11. Head/Jamb Copper Profile

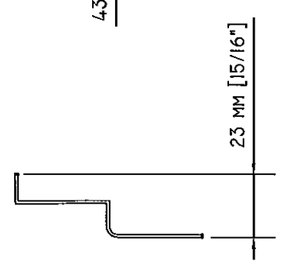

12. Panel Edge Copper Profile

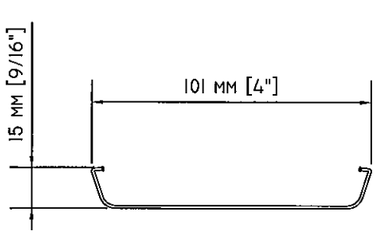

13. Lock Rail Copper Profile

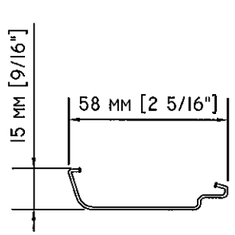

14. Sash Copper Profile

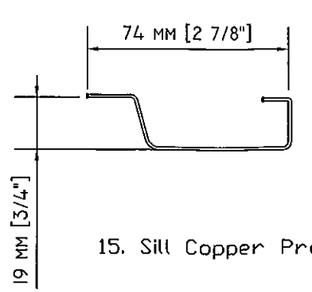

15. Sill Copper Profile

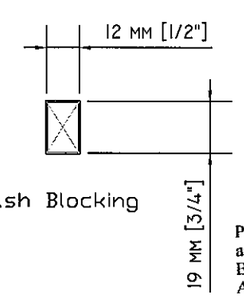

8. Fixed Sash Blocking

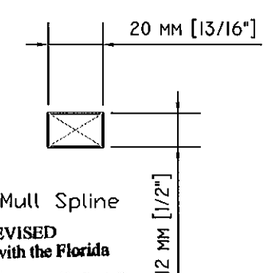

9. Mull Spline

PRODUCT REVISED
as complying with the Florida
Building Code
Acceptance No 12-0319.02
Expiration Date March 22, 2017
By Manuel Perez
Miami-Dade Product Control

FRANK L. BENNARDO, P.E.
LICENSE No. 46549
STATE OF FLORIDA
PROFESSIONAL ENGINEER
03/15/2012

ENGINEERING EXPRESS®
160 SW 12th AVENUE
DEERFIELD BEACH, FL 33442
Ph: (954) 354-0660 Fax: (954) 354-8443
WWW.ENGEXP.COM
CERT OF AUTH #8685
A. FRANK L. BENNARDO, P.E., INC. INNOVATION

HARTMAN WINDOWS & DOORS, LLC
531 SOUTHERN BOULEVARD
WEST PALM BEACH, FL 33405

'EUROPEAN SERIES' MAHOGANY
ARCH-TOP FIXED WINDOWS
LARGE MISSILE IMPACT RESISTANT

REMARKS	DRWN	CHKD	DATE
INITIAL ISSUE	CL	FLB	10/18/06
BCCO COMMENTS	CL	FLB	1/27/07
2010 FBC	KL	FLB	01/25/12
-	-	-	-
-	-	-	-

06-HWD-0009
SCALE: - 03
PAGE DESCRIPTION:
-
-

12

7

03/15/2012 - 11:45am keithl F:\01 Project Files\Hartman Windows & Doors (HWD)\2006 Jobs\06-HWD-0009 European Fixed Window, LMI (NOA)\06-HWD-0009_03a European Fixed Window, LMI (NOA).dwg

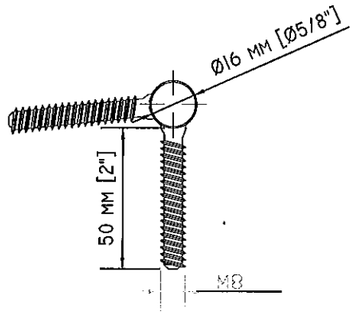

1. Adjustable S.S. Hinge

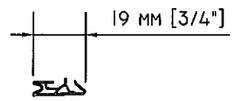

2. Thermoplastic Gasket

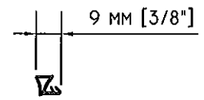

3. Thermoplastic Gasket

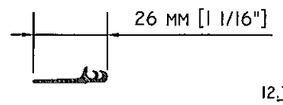

4. Thermoplastic Gasket

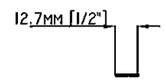

12. NORTON NORSEAL V992 TAPE

MATERIALS LIST			
ITEM	DESCRIPTION	Part No.	SUPPLIER
1	Adjustable S.S. Hinge		Proprietary
2	Gasket(Thermoplastic)	1500530	Olimpia
3	Gasket(Thermoplastic)	1500450	Olimpia
4	Gasket(Thermoplastic)	1500512	Olimpia
5	1½" X 1½" X ⅛"Angle(Aluminum)		Proprietary
6	Galvanized or S.S. Strap		Proprietary
7	Tilt/Turn Keeper		G.U. A.G.B. S.I. HOPPE
8	Tilt/Turn Keeper		G.U. A.G.B. S.I. Hoppe
9	Universal Keeper		G.U. A.G.B. S.I. Hoppe
10	Directional Keeper		G.U. A.G.B. S.I. Hoppe
11	Adjustable S.S. Cam		G.U. A.G.B. S.I. Hoppe
12	NORTON NORSEAL V992 TAPE	1500512	Total Plastics
13			
14			

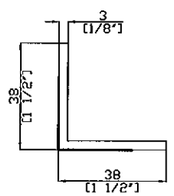

5. Aluminum Angle

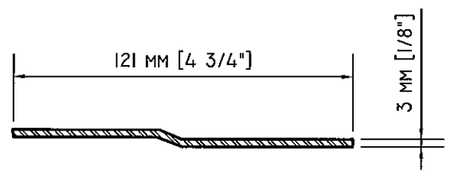

6. Galvanized or S.S. Strap

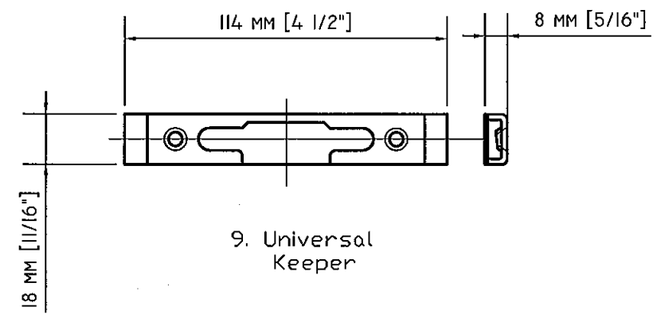

9. Universal Keeper

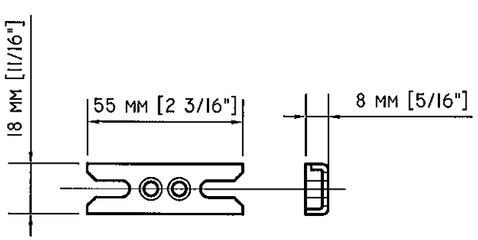

7. Tilt/Turn Keeper

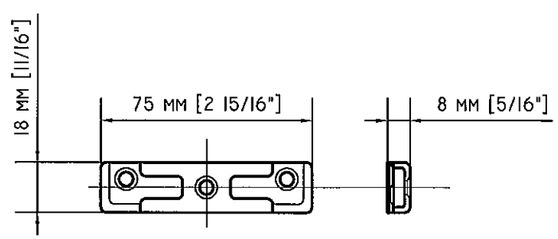

8. Tilt/Turn Keeper

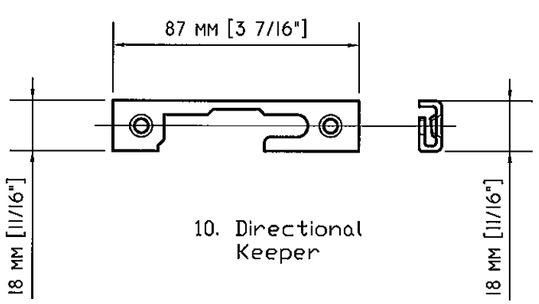

10. Directional Keeper

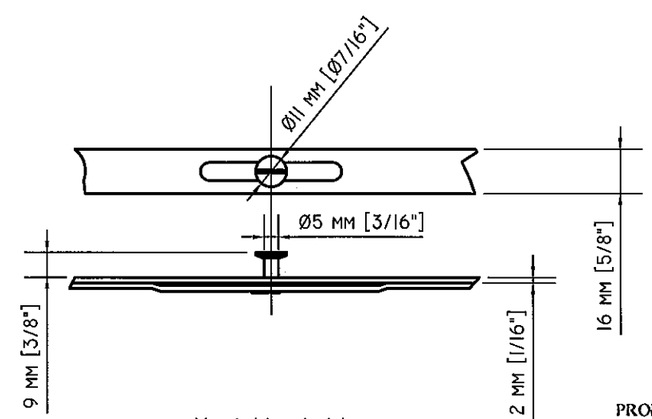

11. Adjustable S.S. Cam

PRODUCT REVISED
as complying with the Florida Building Code
Acceptance No 12-0319.02
Expiration Date March 22, 2017
By Manuel Perez
Miami Dade Product Control

FRANK L. BENNARDO
LICENSE
No. 33442
STATE OF FLORIDA
PROFESSIONAL ENGINEER

ENGINEERING EXPRESS
160 SW 12th AVENUE
DEERFIELD BEACH, FL 33442
Ph: (954) 354-0660 Fax: (954) 354-0445
WWW.ENGEXP.COM
CERT OF AUTH #8885
A. FRANK L. BENNARDO, P.E., INC. INNOVATION

HARTMAN WINDOWS & DOORS, LLC
531 SOUTHERN BOULEVARD
WEST PALM BEACH, FL 33405

'EUROPEAN SERIES' MAHOGANY ARCH-TOP FIXED WINDOWS
LARGE MISSILE IMPACT RESISTANT

REMARKS	DRWN	CHKD	DATE
INITIAL ISSUE	CL	FLB	10/18/06
BCCO COMMENTS	CL	FLB	1/27/07
2010 FBC	KL	FLB	01/25/12

06-HWD-0009
SCALE: - 03
PAGE DESCRIPTION:
-
-

12

8

F:\01 Project Files\Hartman Windows & Doors (HWD)\2006 Jobs\06-HWD-0009 European Fixed Window, LMI (NOA)\06-HWD-0009_03a European Fixed Window, LMI (NOA).dwg
03/15/2012 - 11:45am keithl

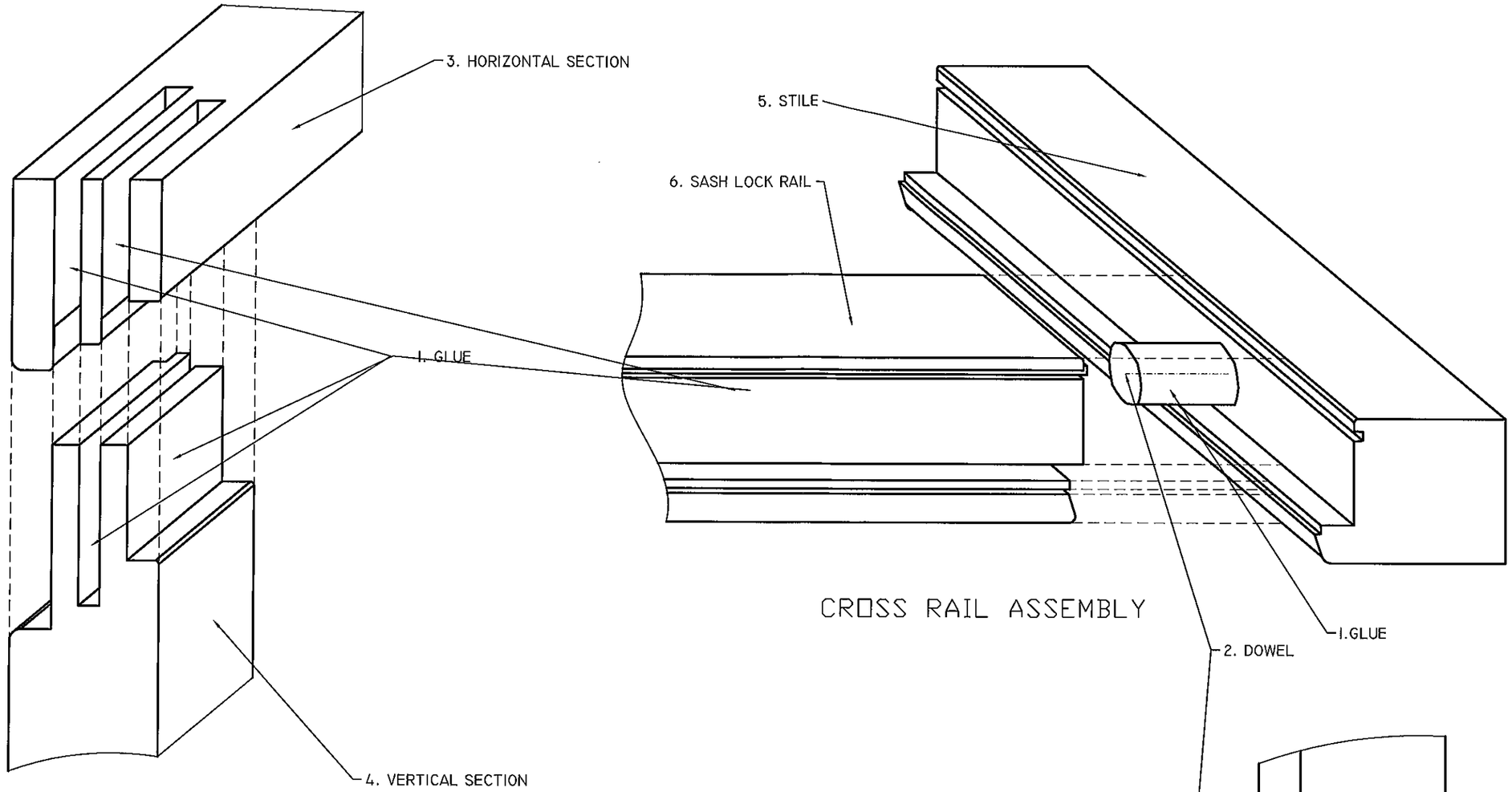

CROSS RAIL ASSEMBLY

MULTI-FORK FRAME AND VENT CORNER ASSEMBLY

MATERIALS LIST		
ITEM	DESCRIPTION	REMARKS/SUPPLIER
1	National Casein or Tite Bond II	Type II Glue
2	Dowel	Mahogany or equal
3	Horizontal Section	Mahogany or equal
4	Vertical Section	Mahogany or equal
5	Stile	Mahogany or equal
6	Sash Lock Rail	Mahogany or equal
7		
8		

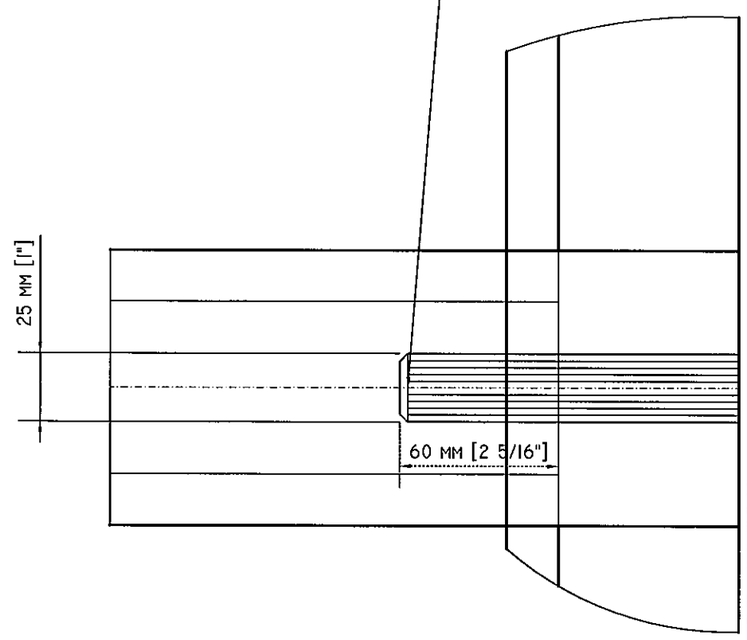

PRODUCT REVISED
as complying with the Florida Building Code
Acceptance No 12-0319.02
Expiration Date March 22, 2017
By Manuel Perez
Miami Dade Product Control

FRANK L. BENNARDO, P.E.
#P50045549
LICENSE
03/15/2012
STATE OF FLORIDA
PROFESSIONAL ENGINEER

ENGINEERING EXPRESS
160 SW 12th AVENUE, #106
DEERFIELD BEACH, FL 33442
PH: (954) 354-0660 FAX: (954) 354-0443
WWW.ENGEXP.COM
CERT OF AUTH #9885
A FRANK L. BENNARDO, P.E., INC. INNOVATION

HARTMAN WINDOWS & DOORS, LLC
531 SOUTHERN BOULEVARD
WEST PALM BEACH, FL 33405

'EUROPEAN SERIES' MAHOGANY
ARCH-TOP FIXED WINDOWS
LARGE MISSILE IMPACT RESISTANT

REMARKS	DRWN	CHKD	DATE
INITIAL ISSUE	CL	FLB	10/18/06
BCCO COMMENTS	CL	FLB	1/27/07
2010 FBC	KL	FLB	01/25/12
-	-	-	-
-	-	-	-

06-HWD-0009
SCALE: - 03
PAGE DESCRIPTION:
-
-

12

9

F:\01 Project Files\Hartman Windows & Doors (HWD)\2006 Jobs\06-HWD-0009 European Fixed Window, LMI (NOA)\06-HWD-0009_03a European Fixed Window, LMI (NOA).dwg
03/15/2012 - 11:45am keithl

SASH ONLY / DIRECT GLAZED APPROVED SHAPES

REFER TO RECTANGULAR UNIT DETAILS HEREIN FOR APPROVED ANCHOR TYPES AND MAXIMUM SPACING

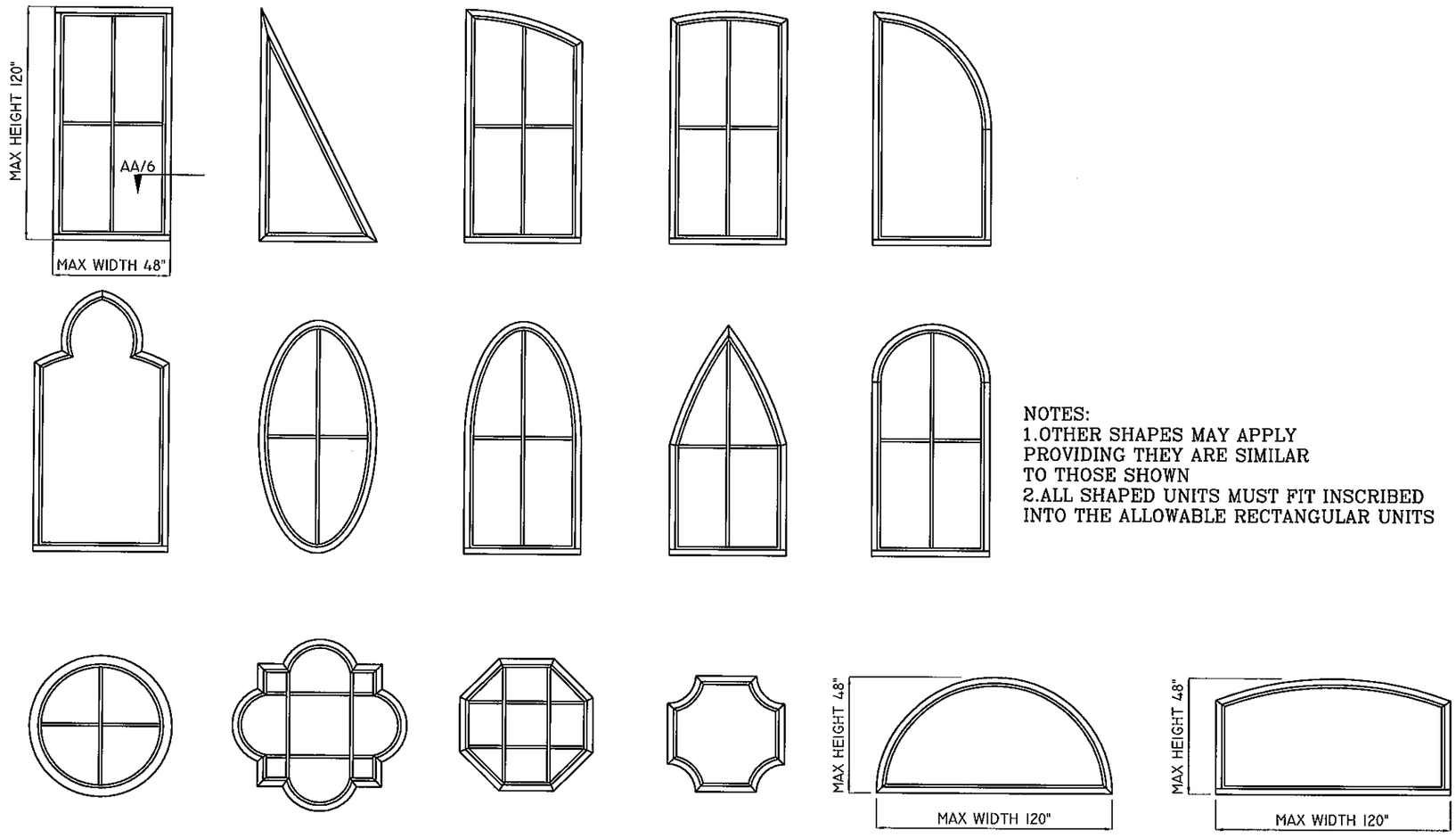

NOTES:
1.OTHER SHAPES MAY APPLY PROVIDING THEY ARE SIMILAR TO THOSE SHOWN
2.ALL SHAPED UNITS MUST FIT INSCRIBED INTO THE ALLOWABLE RECTANGULAR UNITS

PRODUCT REVISED
as complying with the Florida Building Code
Acceptance No 12-0319.02
Expiration Date March 22, 2017
By Manuel Perez
Miami Dade Product Control

FRANK L. BENNARDO, P.E.
PE0046549
LICENSE
No. 46549
STATE OF FLORIDA
PROFESSIONAL ENGINEER
03/15/2012

ENGINEERING EXPRESS
160 SW 12th AVENUE, #1100
DEERFIELD BEACH, FL 33442
Ph: (954) 354-0660 Fax: (954) 354-0943
WWW.ENGEXP.COM
CERT OF AUTH #9885
A. FRANK L. BENNARDO, P.E., INC. INNOVATION

HARTMAN WINDOWS & DOORS, LLC
531 SOUTHERN BOULEVARD
WEST PALM BEACH, FL 33405

'EUROPEAN SERIES' MAHOGANY
ARCH-TOP FIXED WINDOWS
LARGE MISSILE IMPACT RESISTANT

REMARKS	DRWN	CHKD	DATE
INITIAL ISSUE	CL	FLB	10/18/06
BCCO COMMENTS	CL	FLB	1/27/07
2010 FBC	KL	FLB	01/25/12
-	-	-	-
-	-	-	-

06-HWD-0009
SCALE: - 03
PAGE DESCRIPTION:
-
-

12
10

F:\01 Project Files\Hartman Windows & Doors (HWD)\2006 Jobs\06-HWD-0009 European Fixed Window, LMI (NOA)\06-HWD-0009_03a European Fixed Window, LMI (NOA).dwg
03/15/2012 - 11:45am keithl

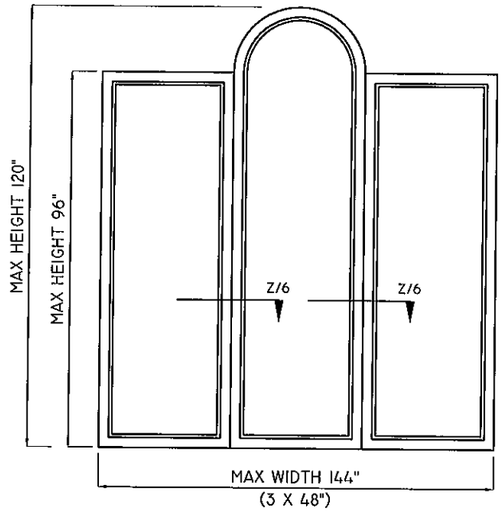

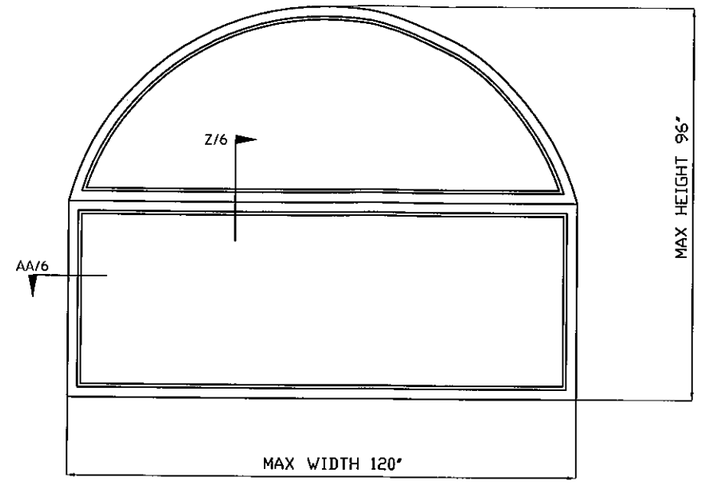

REFER TO MULLED UNIT DETAILS HEREIN FOR APPROVED ANCHOR TYPES AND MAXIMUM SPACING

NOTE: ELEVATIONS ARE NOT DRAWN TO SCALE

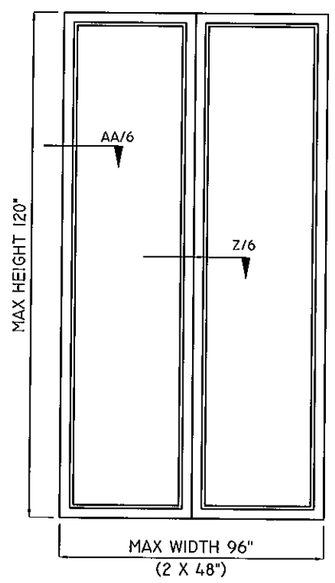

DIRECT GLAZED WINDOWS APPROVED SHAPES

NOTES:
1.OTHER SHAPES MAY APPLY PROVIDING THEY ARE SIMILAR TO THOSE SHOWN
2.ALL SHAPED UNITS MUST FIT INSCRIBED INTO THE ALLOWABLE RECTANGULAR UNITS
3.REFER TO INSWING & OUTSWING CASEMENT N.O.A. FOR ADDITIONAL MULL CONDITIONS

NOTE TO INSTALLER FOR - 1-1/2" X 1-1/2" X 1/8" ALUMINUM ANGLE
PROVIDE #10 x 2" STAINLESS STEEL FASTENERS FOR WOOD SUBSTRATE SCREW THROUGH ALUMINUM NAIL FIN INTO WOOD BUCK
MIN. 1-3/4" PENETRATION SPACED AS INDICATED
SEE SECTION DETAILS FOR DETAILS

ALTERNATE INSTALLATION METHOD : .045 X 1-3/4" X 5" GALVANIZED STEEL CLIPS
PROVIDE (2) #10 x 1-1/2" STAINLESS STEEL FASTENERS FOR WOOD SUBSTRATE SCREW THROUGH STEEL CLIP INTO WOOD BUCK OR MASONRY OPENING. MIN. PENETRATION 1-1/4" SPACED AS INICATED
SEE SECTION DETAILS FOR DETAILS

PRODUCT REVISED
as complying with the Florida Building Code
Acceptance No 12-0319.02
Expiration Date March 22, 2017
By Manuel Perez
Miami Dade Product Control

FRANK L. BENNARDO, P.E.
LICENSE
03/15/2012
STATE OF FLORIDA
PROFESSIONAL ENGINEER

ENGINEERING EXPRESS
160 SW 12th AVENUE, #106
DEERFIELD BEACH, FL 33442
PH: (954) 354-0660 FAX: (954) 354-0445
WWW.ENGEXP.COM
CERT OF AUTH #9885
A FRANK L. BENNARDO, P.E., INC. INNOVATION

HARTMAN WINDOWS & DOORS, LLC
531 SOUTHERN BOULEVARD
WEST PALM BEACH, FL 33405

'EUROPEAN SERIES' MAHOGANY
ARCH-TOP FIXED WINDOWS
LARGE MISSILE IMPACT RESISTANT

REMARKS	DRWN	CHKD	DATE
INITIAL ISSUE	CL	FLB	10/18/06
BCCO COMMENTS	CL	FLB	1/27/07
2010 FBC	KL	FLB	01/25/12
-	-	-	-
-	-	-	-

06-HWD-0009
SCALE: - 03
PAGE DESCRIPTION:
-
-

12
11

F:\01 Project Files\Hartman Windows & Doors (HWD)\2006 Jobs\06-HWD-0009 European Fixed Window, LMI (NOA)\06-HWD-0009_03a European Fixed Window, LMI (NOA).dwg
03/15/2012 - 11:45am keithl

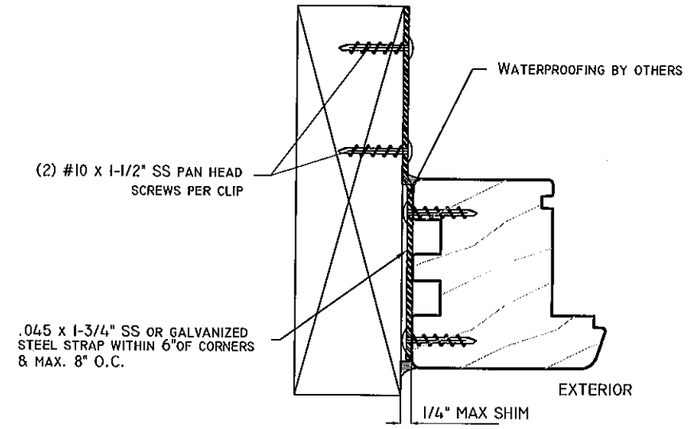

0.045 X 1-3/4" X 5" GALVANIZED STEEL CLIPS
PROVIDE #8 x 1-1/2" STAINLESS STEEL FASTENERS FOR WOOD SUBSTRATE
SCREW THROUGH STEEL CLIP INTO WOOD BUCK OR MASONRY
OPENING. MIN. PENETRATION 1-1/4" SPACED AS INICATED

TYP CLIP DETAIL

ALT ANCHOR METHOD #1

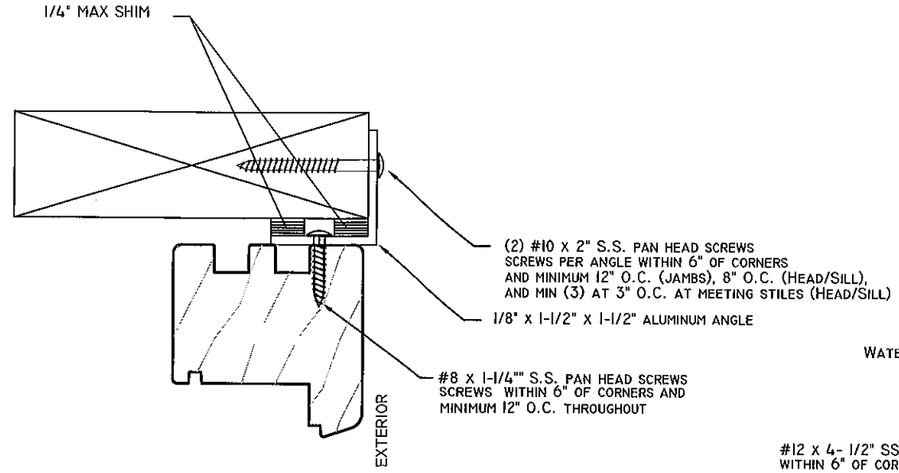

1-1/2" X 1-1/2" X 1/8" ALUMINUM ANGLE
PROVIDE #10 x 2" STAINLESS STEEL FASTENERS FOR WOOD SUBSTRATE
SCREW THROUGH ALUMINUM NAIL FIN INTO WOOD BUCK
MIN. 1-3/4" PENETRATION SPACED AS INDICATED

TYP NAIL FIN DETAIL

ALT ANCHOR METHOD #2

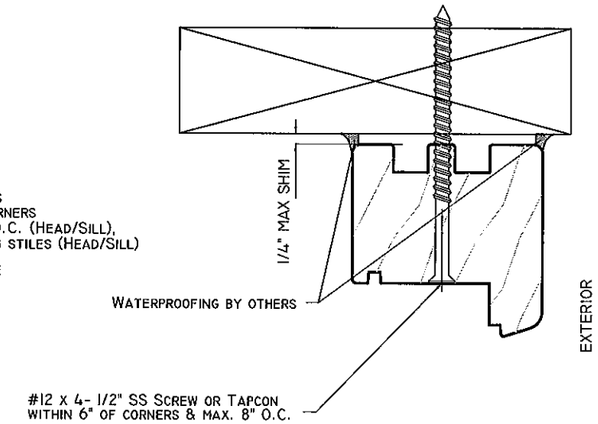

#12 x 4-1/2" S.S. SCREW
THROUGH JAMB INTO WOOD BUCK OR MASONRY
OPENING. MIN. PENETRATION 1-1/4" SPACED AS INICATED

TYP DIRECT ANCHOR DETAIL

ALT ANCHOR METHOD #3

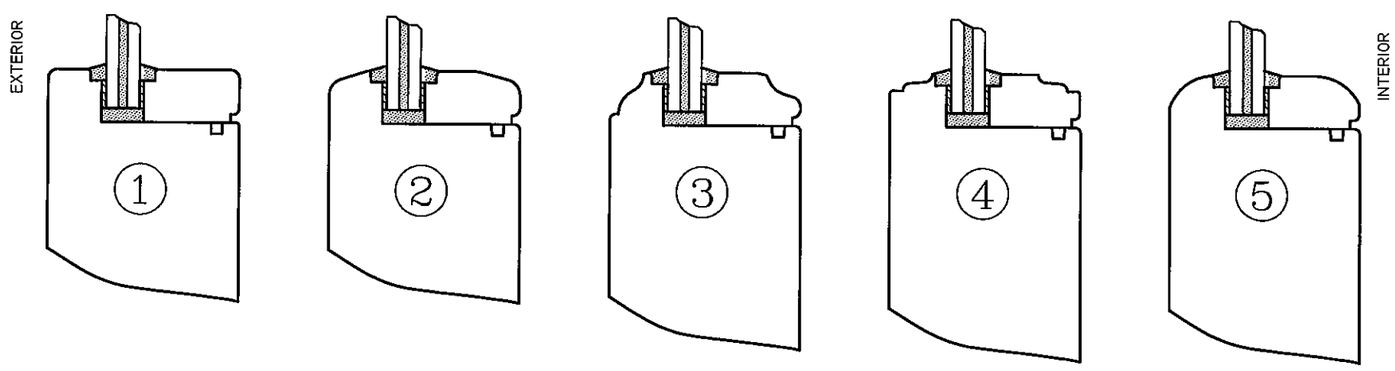

ALTERNATE GLAZING PROFILES

PRODUCT REVISED
as complying with the Florida
Building Code
Acceptance No 12-0319.02
Expiration Date March 22, 2017
By Manuel Perez
Miami-Dade Product Control

FRANK L. BENNARDO, P.E.
LICENSE No. 46549
03/15/2012
STATE OF FLORIDA
ENGINEERING EXPRESS, INC.
160 SW 12th AVENUE #105
DEERFIELD BEACH, FL 33442
Ph: (954) 354-0660 Fax: (954) 354-0443
WWW.ENGEXP.COM
CERT OF AUTH #9685
A. FRANK L. BENNARDO, P.E., INC. INNOVATOR

HARTMAN WINDOWS & DOORS, LLC
531 SOUTHERN BOULEVARD
WEST PALM BEACH, FL 33405

'EUROPEAN SERIES' MAHOGANY
ARCH-TOP FIXED WINDOWS
LARGE MISSILE IMPACT RESISTANT

REMARKS	DRWN	CHKD	DATE
INITIAL ISSUE	CL	FLB	10/18/06
BCCO COMMENTS	CL	FLB	1/27/07
2010 FBC	KL	FLB	01/25/12
-	-	-	-
-	-	-	-

06-HWD-0009
SCALE: - 03
PAGE DESCRIPTION:
-
-

12

12

03/15/2012 - 11:44am keithl F:\01 Project Files\Hartman Windows & Doors (HWD)\2006 Jobs\06-HWD-0009 European Fixed Window, LMI (NOA)\06-HWD-0009_03a European Fixed Window, LMI (NOA).dwg