MIAMI-DADE COUNTY
DEPARTMENT OF REGULATORY AND ECONOMIC RESOURCES
BOARD AND CODE ADMINISTRATION DIVISION

MIAMI-DADE COUNTY
PRODUCT CONTROL SECTION
11805 SW 26 Street, Room 208
Miami, Florida 33175-2474
T (786) 315-2590 F (786) 315-2599
www.miamidade.gov/building

NOTICE OF ACCEPTANCE (NOA)

Master Security Doors, Inc.
2179 N. Powerline Road, Suite 2
Pompano Beach, FL 33069

SCOPE:
This NOA is being issued under the applicable rules and regulations governing the use of construction materials. The documentation submitted has been reviewed and accepted by Miami-Dade County RER-Product Control Section to be used in Miami Dade County and other areas where allowed by the Authority Having Jurisdiction (AHJ).

This NOA shall not be valid after the expiration date stated below. The Miami-Dade County Product Control Section (In Miami Dade County) and/or the AHJ (in areas other than Miami Dade County) reserve the right to have this product or material tested for quality assurance purposes. If this product or material fails to perform in the accepted manner, the manufacturer will incur the expense of such testing and the AHJ may immediately revoke, modify, or suspend the use of such product or material within their jurisdiction. RER reserves the right to revoke this acceptance, if it is determined by Miami-Dade County Product Control Section that this product or material fails to meet the requirements of the applicable building code.

This product is approved as described herein, and has been designed to comply with the High Velocity Hurricane Zone of the Florida Building Code.

DESCRIPTION: Outswing Single Steel Door

APPROVAL DOCUMENT: Drawing No. 12-055, titled " Outswing Single Steel Door", sheets 1 through 20 of 20, prepared by Tilteco, Inc., dated February 29, 2012, last revision #1 dated February 29, 2012, signed and sealed by Walter A. Tillit Jr., P.E., on March 12, 2012, bearing the Miami-Dade County Product Control Revision stamp with the Notice of Acceptance number and the expiration date by the Miami-Dade County Product Control Section.

MISSILE IMPACT RATING: Large and Small Missile Impact Resistant

LABELING: Each unit shall bear a permanent label with the manufacturer's name or logo, city, state and the following statement: "Miami-Dade County Product Control Approved", unless otherwise noted herein.

RENEWAL of this NOA shall be considered after a renewal application has been filed and there has been no change in the applicable building code negatively affecting the performance of this product.

TERMINATION of this NOA will occur after the expiration date or if there has been a revision or change in the materials, use, and/or manufacture of the product or process. Misuse of this NOA as an endorsement of any product, for sales, advertising or any other purposes shall automatically terminate this NOA. Failure to comply with any section of this NOA shall be cause for termination and removal of NOA.

ADVERTISEMENT: The NOA number preceded by the words Miami-Dade County, Florida, and followed by the expiration date may be displayed in advertising literature. If any portion of the NOA is displayed, then it shall be done in its entirety.

INSPECTION: A copy of this entire NOA shall be provided to the user by the manufacturer or its distributors and shall be available for inspection at the job site at the request of the Building Official.

This NOA **revises & renews NOA #07-0417.04** and consists of this page 1, evidence submitted pages E-1 & E-2 as well as approval document mentioned above.
The submitted documentation was reviewed by **Helmy A. Makar, P.E., M.S.**

MIAMI-DADE COUNTY APPROVED

Helmy A. Makar
07/26/2012

NOA No. 12-0319.07
Expiration Date: 04/11/2013
Approval Date: 07/26/2012

Master Security Doors, Inc.

NOTICE OF ACCEPTANCE: EVIDENCE SUBMITTED

1. EVIDENCE SUBMITTED UNDER PREVIOUS APPROVAL #01-1019.02

A. DRAWINGS

1. *Manufacturer's die drawings and sections.*
2. *Drawing No. MOL-004, titled "Model: EX-4 US In or Outswing Single Door", sheets 1 through 20 of 20, prepared by Master S.R.L., structurally reviewed by Walter A. Tillit Jr., P.E., dated August 11, 2000.*

B. TESTS

1. *Test reports on 1) Air Infiltration Test, per SFBC, PA 202-94*
   2) Uniform Static Air Pressure Test, Loading per SFBC PA 202-94
   3) Water Resistance Test, per SFBC, PA 202-94
   4) Large Missile Impact Test per SFBC, PA 201-94
   5) Cyclic Wind Pressure Loading per SFBC, PA 203-94
   6) Forced Entry Test, per SFBC 3603.2 (b) and PA 202-94
   along with marked-up drawings and installation diagram of Model: EX-4 US In or Outswing Single Door, prepared by American Test Lab of South Florida, Test Report No. 1213.02-99, dated 11/13/2000, signed and sealed by William R. Mehner, P.E. and Henry Hattem P.E.

C. CALCULATIONS

1. *Anchor Calculations, prepared by Tilteco, Inc., dated 10/21/2000, sheets 1 through 3 of 3, signed and sealed by Walter A. Tillit Jr., P.E.*

D. MATERIAL CERTIFICATIONS

1. *Tensile Test Report #1CM-298, by Q C Metallurgical, Inc., dated March 02, 2001, for samples #ATL 1213.02-99 ABC, signed and sealed by Frank Grate, P.E.*

E. STATEMENTS

1. *Statement letter of conformance, dated 11/09/2000, signed and sealed by Walter A. Tillit Jr., P.E.*
2. *Statement letter of no financial interest, dated 11/09/2000, signed and sealed by Walter A. Tillit Jr., P.E.*

2. EVIDENCE SUBMITTED UNDER PREVIOUS APPROVAL # 07-0417.04

A. DRAWINGS

1. *Drawing No. 07-149, titled " Outswing Single Steel Door", sheets 1 through 20 of 20, prepared by Tilteco, Inc., dated March 25, 2007, last revision #1 dated June 01, 2007, signed and sealed by Walter A. Tillit Jr., P.E., on June 11, 2007.*

Helmy A. Makar, P.E., M.S.
Product Control Unit Supervisor
NOA No. 12-0319.07
Expiration Date: 04/11/2013
Approval Date: 07/26/2012

NOTICE OF ACCEPTANCE: EVIDENCE SUBMITTED

B. TESTS

1. *None.*

C. CALCULATIONS

1. *Anchor Calculations, prepared by Tilteco, Inc., dated 06/01/2007, sheets 1 through 12 of 12, signed and sealed by Walter A. Tillit Jr., P.E.*

D. QUALITY ASSURANCE

1. *By Miami-Dade County Building Code Compliance Office.*

E. MATERIAL CERTIFICATIONS

1. *None.*

F. STATEMENTS

1. *Statement letter of conformance to 2004 Florida Building Code, dated June 11, 2007, signed and sealed by Walter A. Tillit Jr., P.E.*

3. NEW EVIDENCE SUBMITTED

A. DRAWINGS

1. *Drawing No. 12-055, titled " Outswing Single Steel Door", sheets 1 through 20 of 20, prepared by Tilteco, Inc., dated February 29, 2012, last revision #1 dated 02/29/2012, signed and sealed by Walter A. Tillit Jr., P.E., on March 12, 2012.*

B. TESTS

1. *None.*

C. CALCULATIONS

1. *None.*

D. QUALITY ASSURANCE

1. *By Miami-Dade County Department of Regulatory and Economic Resources.*

E. MATERIAL CERTIFICATIONS

1. *None.*

F. STATEMENTS

1. *Statement letter of conformance to 2010 Florida Building Code, dated March 12, 2012, signed and sealed by Walter A. Tillit Jr., P.E.*

Helmy A. Makar, P.E., M.S.
Product Control Unit Supervisor
NOA No. 12-0319.07
Expiration Date: 04/11/2013
Approval Date: 07/26/2012

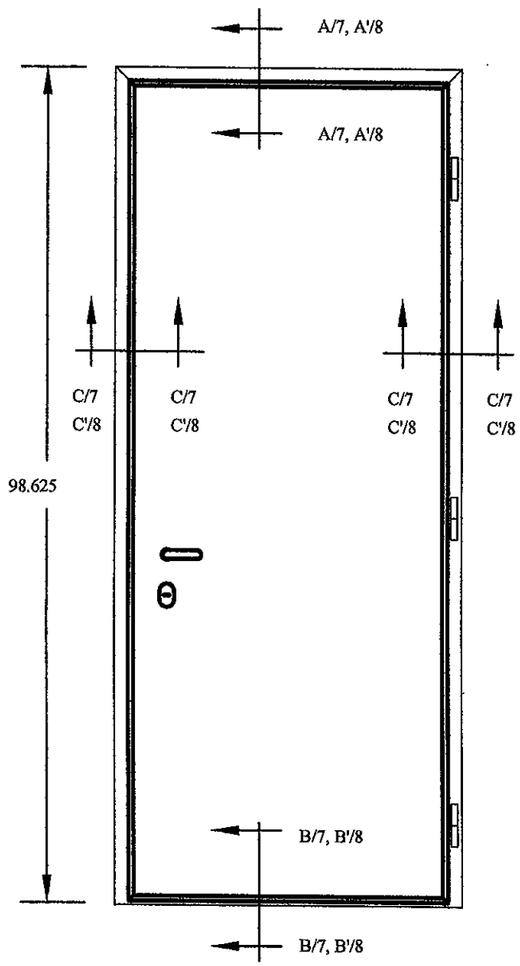

ELEVATION

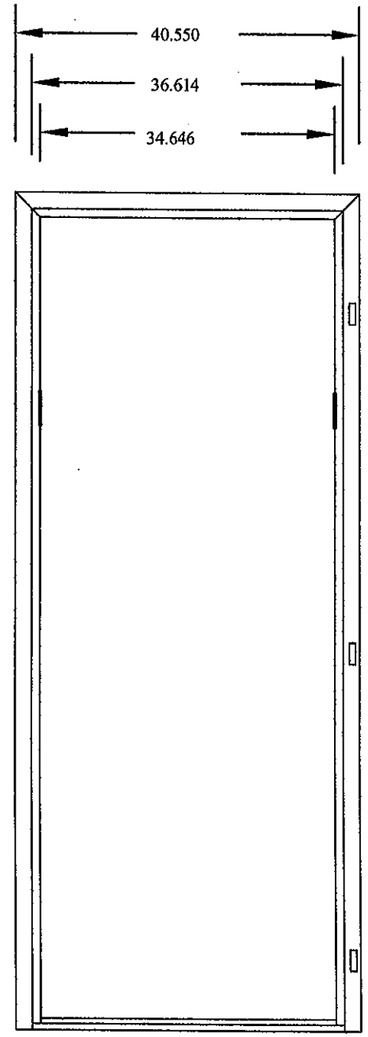

FRAME

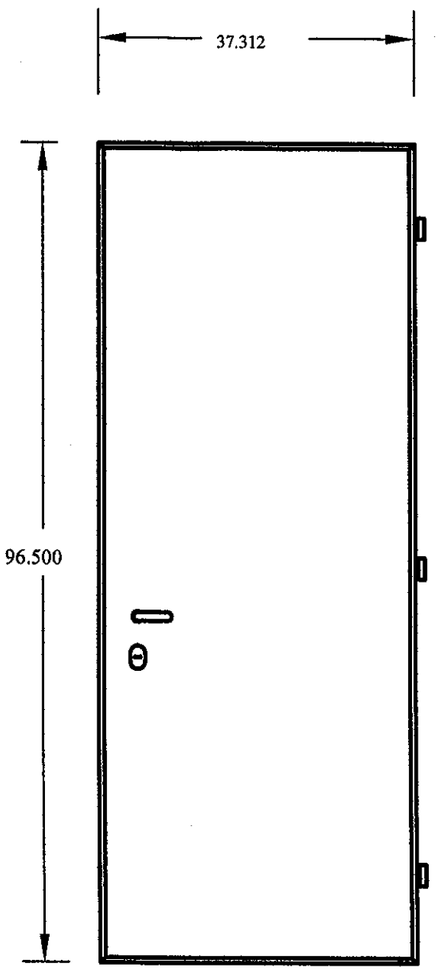

DOOR

MAX. A.S.D. DESIGN PRESSURE RATING: + 200, - 200 P.S.F.
(PER TAS 201, 202 AND 203 PROTOCOLS).

GENERAL NOTES:

THIS DOOR SHOWN ON THIS PRODUCT APPROVAL DOCUMENT (P.A.D.) HAS BEEN VERIFIED FOR CODE COMPLIANCE IN ACCORDANCE WITH THE 2007 & 2010 EDITIONS OF THE FLORIDA BUILDING CODE. DESIGN WIND LOADS SHALL BE DETERMINED AS PER SECTION 1620 OF THE ABOVE MENTIONED CODES, USING ASCE 7-05 STANDARD FOR INSTALLATIONS UNDER 2007 FBC & ACE 7-10 FOR INSTALLATIONS UNDER 2010 FBC AND SHALL NOT EXCEED THE MAXIMUM (A.S.D.) DESIGN PRESSURE RATING INDICATED ON THIS SHEET.

IN ORDER TO VERIFY THE ABOVE CONDITION, ULTIMATE DESIGN WIND LOADS DETERMINED PER ASCE 7-10 SHALL BE FIRST REDUCED TO A.S.D. DESIGN WIND LOADS BY MULTIPLYING THEM BY 0.6 IN ORDER TO COMPARE THESE W/ MAX. (A.S.D.) DESIGN PRESSURE RATING INDICATED ON THIS SHEET.

IN ORDER TO VERIFY THAT ANCHORS ON THIS P.A.D., AS TESTED, WERE NOT OVERSTRESSED, A 33% INCREASE IN ALLOWABLE STRESS FOR WIND LOADS WAS NOT USED IN THEIR ANALYSIS. A DURATION FACTOR CD = 1.60 WAS USED FOR VERIFICATION OF FASTENERS IN WOOD.

FRAME AND SUB-FRAME MATERIAL: HOT ROLLED METAL DD12 REF. EN 10111 WITH TENSILE STRENGTH = 48,000 P.S.I.; YIELD STRENGTH AT 0.2% = 41,000 P.S.I. ULTIMATE ELONGATION 34%.

DOOR MATERIAL: HOT ROLLED ZINC PLATED DX51 + Z275 (275 G/m^2, 0.6 OZ/FT^2) REF. EN 10142 + A1-97 WITH TENSILE STRENGTH = 73,000 P.S.I. YIELD STRENGTH 58,000 P.S.I., ULTIMATE ELONGATION 30%

ASTM DESIGNATION FOR STEEL : EQUIVALENT TO ASTM A 653 CQ GRADE 41 AT FRAME AND ASTM A 653 CQ GRADE 60 AT DOOR

GALVANIZING TYPE: G60

WOOD BUCKS BY OTHERS, NOT BY MASTER SECURITY DOORS BUT SHALL BE OF SPECIFIC GRAVITY G = 0.55 MIN. AND SHALL COMPLY W/ SECTIONS 2411.3.3.3. & 2326 OF THE 2007 & 2010 EDITIONS OF THE FLORIDA BUILDING CODE & MUST SUSTAIN LOADS IMPOSED BY DOOR AND TRANSFER THEM TO THE BUILDING STRUCTURE

DOOR DOES NOT NEED A HURRICANE PROTECTIVE DEVICE

DECORATIVE WOOD CLAD PANELS: 0.250" THICK PLYWOOD, OAK, PINE, MAHOGANY, DOUGLAS FIR WITH 10-12% MAX. MOISTURE CONTENT, PAINTED WITH SEVERAL COATINGS OF WATER BASED VARNISHES, PROTECTIVE IMPREGNATORS AND COATINGS FOR OUTDOOR INSTALLATION

PROVIDE 1/4" MAX. BEARING SHIM SPACE.

MIAMI DADE COUNTY

PRODUCT REVISED
as complying with the Florida Building Code
Acceptance No 12-0319.07
Expiration Date 04/11/2013
By
Miami Dade Product Control

WALTER A. TILLIT JR. LICENSE No. 44167 STATE OF FLORIDA PROFESSIONAL ENGINEER

P.E. SEAL/SIGNATURE/DATE

TILTECO INC.
TILLIT TESTING & ENGINEERING COMPANY
6355 N.W. 36th. St., Ste. 305, VIRGINIA GARDENS, FLORIDA 33166
Phone : (305)871-1530 . Fax : (305)871-1531
e-mail: tilteco@aol.com
EB-0006719
WALTER A. TILLIT Jr. P. E.
FLORIDA Lic. # 44167

OUTSWING SINGLE STEEL DOOR

MASTER SECURITY DOORS, INC.
702 SOUTH MILITARY TRAIL
DEERFIELD BEACH, FL 33442
PH (561)499-7558 FAX (561)499-7558

REV.No	DESCRIPTION	DATE	Drawn by: MIR/F.P./A.G.
1	OLD 07-149	02/29/12	DATE: 02/29/12

PRODUCT DESCRIPTION
FRAME ASSEMBLY

DRAWING No
12-055

MODEL: EX - 4
DESCRIPTION: OS DOOR

SHEET
1 OF 20

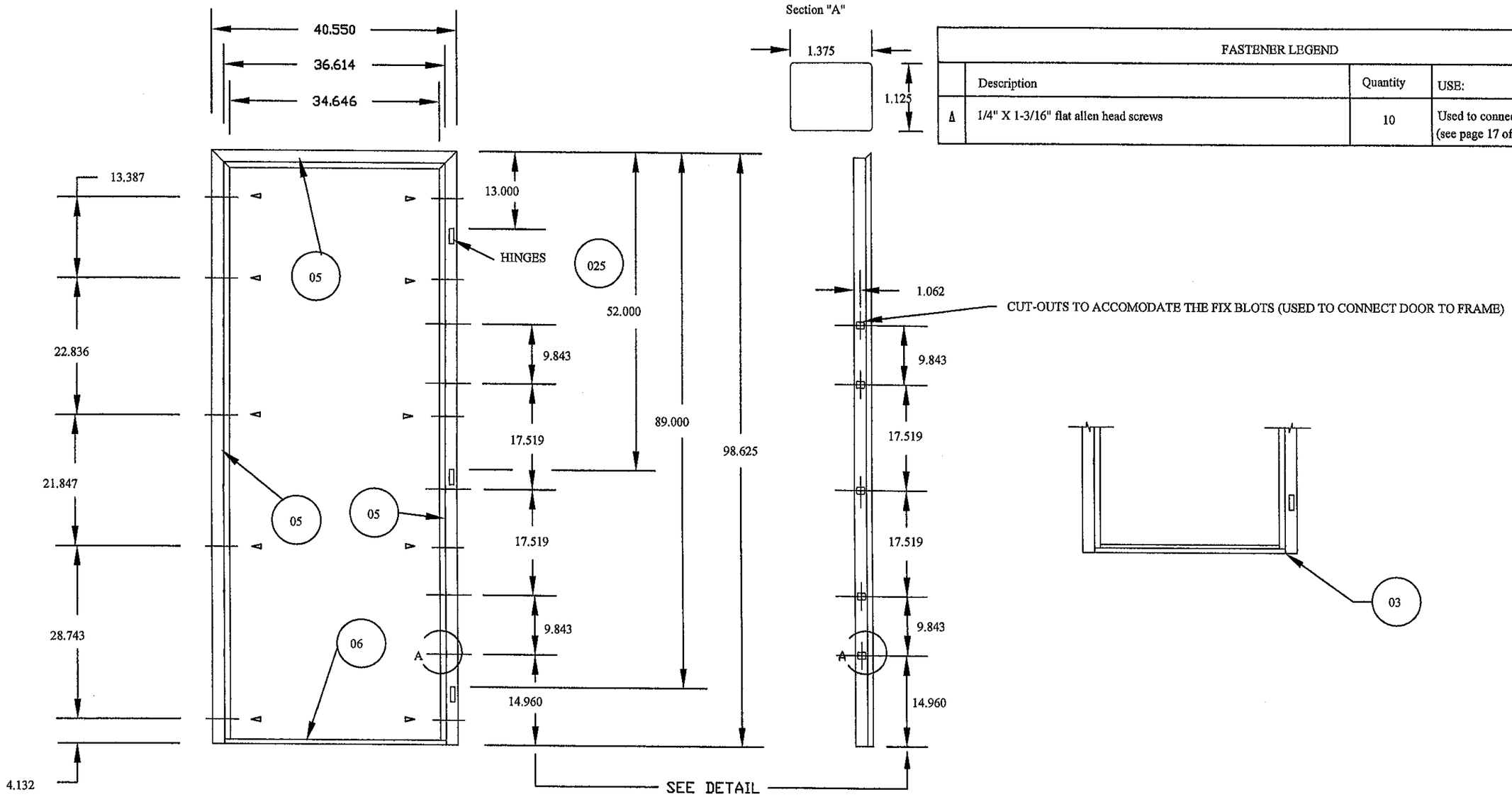

FASTENER LEGEND			
	Description	Quantity	USE:
A	1/4" X 1-3/16" flat allen head screws	10	Used to connect frame to sub-frame, (see page 17 of 20)

MIAMI DADE COUNTY

PRODUCT REVISED
as complying with the Florida
Building Code
Acceptance No 12-0319.07
Expiration Date 04/11/2013
By
Miami Dade Product Control

WALTER A. TILLIT JR.
LICENSE
No. 44167
STATE OF FLORIDA
PROFESSIONAL ENGINEER

P.E. SEAL/SIGNATURE/DATE

TILTECO INC.
TILLIT TESTING & ENGINEERING COMPANY
6355 N.W. 36th. St., Ste. 305, VIRGINIA GARDENS, FLORIDA 33166
Phone : (305)871-1530 . Fax : (305)871-1531
e-mail: tilteco@aol.com
EB-0006719
WALTER A. TILLIT Jr. P. E.
FLORIDA Lic. # 44167

OUTSWING SINGLE STEEL DOOR

MASTER SECURITY DOORS, INC.
702 SOUTH MILITARY TRAIL
DEERFIELD BEACH, FL 33442
PH (561)499-7558 FAX (561)499-7558

REV.No	DESCRIPTION	DATE	Drawn by: MIR/F.P./A.G.
1	OLD 07-149	02/29/12	DATE: 02/29/12

PRODUCT DESCRIPTION FRAME ASSEMBLY	DRAWING No 12-055
MODEL: EX - 4 DESCRIPTION: OS DOOR	SHEET 2 OF 20

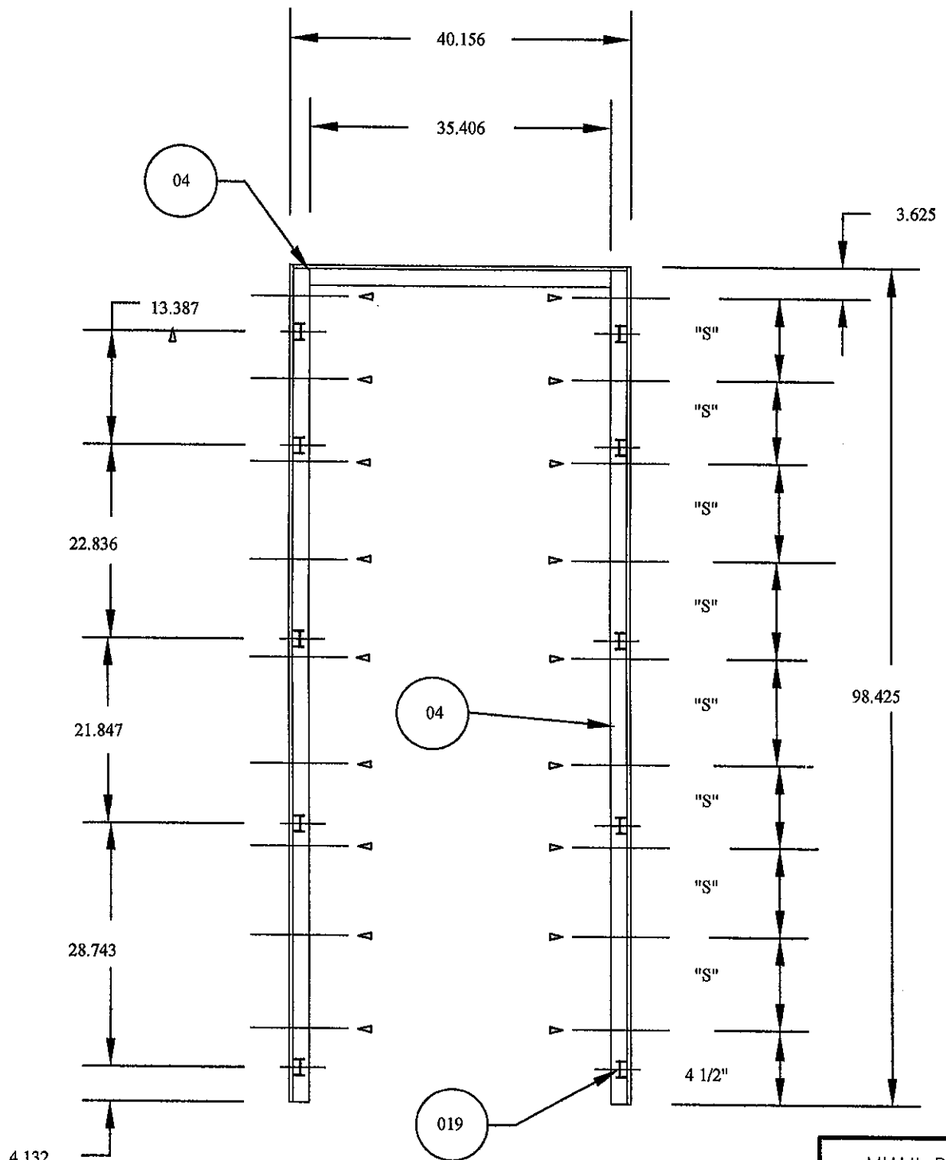

FASTENER LEGEND		
	Description	Maximum on Center Spacing "S"
Δ	3/8" hex head lag screws with flat washers with 3" minimum embedment Used to fasten sub-frame to double minimum 2" x 4" wood buck. *	7 1/2"

* **NOTE:** For installations into poured concrete or ASTM C-90 grouted wall concrete block wall, lag screws shall be replaced with 3/8 diameter Tapper Anchors, as manufactured by Powers Fasteners, Inc. with 1 1/2" minimum embedment beyond any wall finish, spaced at "S" = 9" o.c.

MIAMI DADE COUNTY

PRODUCT REVISED
as complying with the Florida Building Code
Acceptance No 12-0319.07
Expiration Date 04/11/2013
By
Miami Dade Product Control

WALTER A. TILLIT JR. LICENSE NO. 44167 STATE OF FLORIDA PROFESSIONAL ENGINEER
3/1/12
P.E. SEAL/SIGNATURE/DATE

TILTECO INC.
TILLIT TESTING & ENGINEERING COMPANY
6355 N.W. 36th. St., Ste. 305, VIRGINIA GARDENS, FLORIDA 33166
Phone : (305)871-1530 . Fax : (305)871-1531
e-mail: tilteco@aol.com
EB-0006719
WALTER A. TILLIT Jr. P. E.
FLORIDA Lic. # 44167

OUTSWING SINGLE STEEL DOOR

MASTER SECURITY DOORS, INC.
702 SOUTH MILITARY TRAIL
DEERFIELD BEACH, FL 33442
PH (561)499-7558 FAX (561)499-7558

REV.No	DESCRIPTION	DATE	Drawn by: MIR/F.P./A.G.
1	OLD 07-149	02/29/12	DATE: 02/29/12

PRODUCT DESCRIPTION
SUB-FRAME ASSEMBLY

DRAWING No
12-055

MODEL: EX - 4
DESCRIPTION: OS DOOR

SHEET
3 OF 20

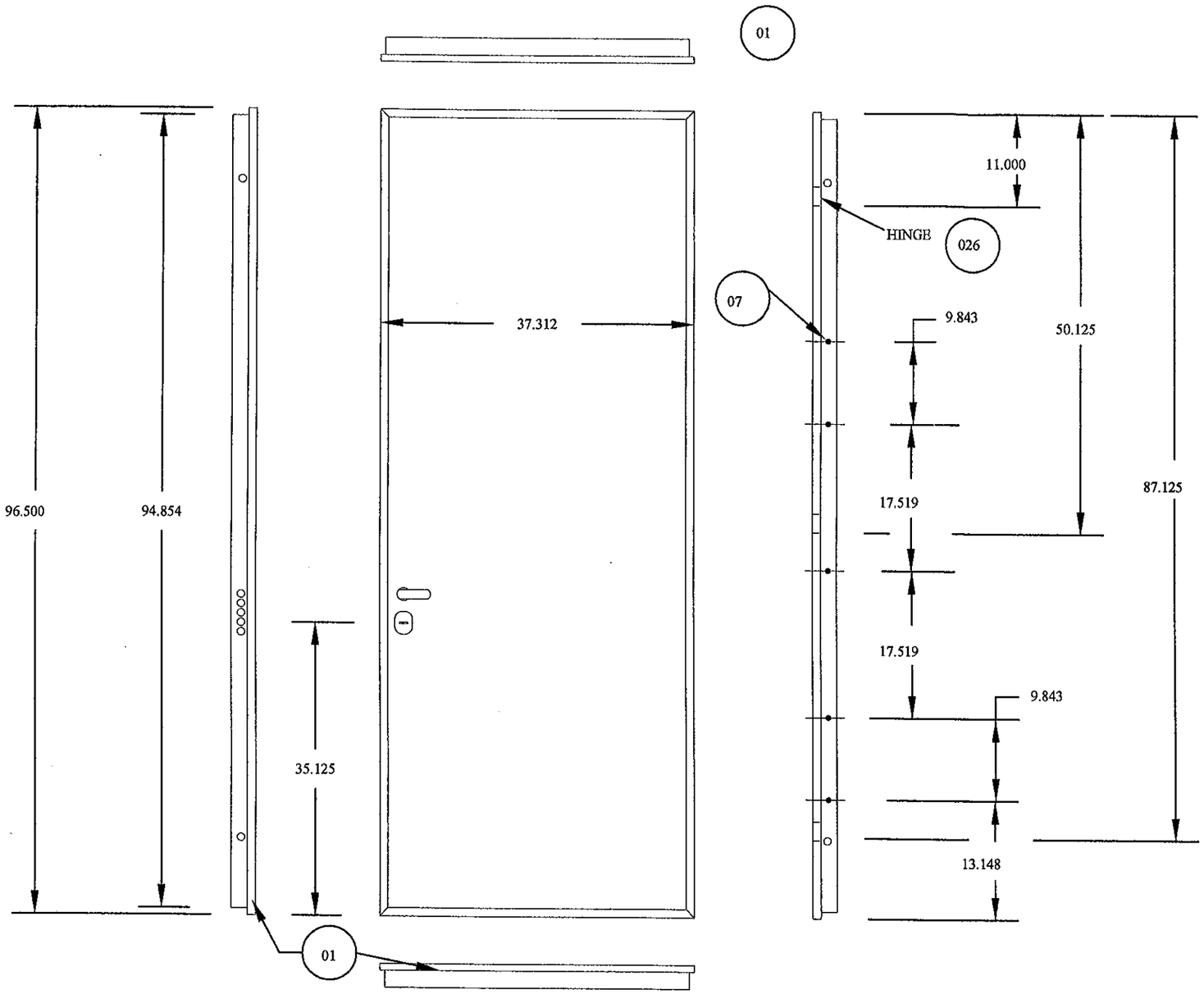

TOP AND BOTTOM RAILS

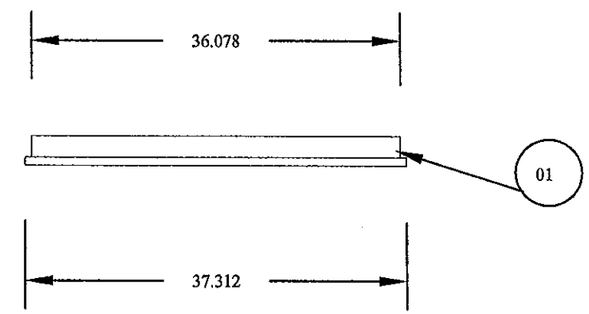

MIAMI DADE COUNTY

PRODUCT REVISED
as complying with the Florida
Building Code
Acceptance No 12-0319.07
Expiration Date 04/11/2013
By
Miami Dade Product Control

WALTER A. TILLIT JR.
LICENSE
NO. 44167
STATE OF
FLORIDA
PROFESSIONAL ENGINEER

P.E. SEAL/SIGNATURE/DATE

TILTECO INC.
TILLIT TESTING & ENGINEERING COMPANY
6355 N.W. 36th. St., Ste. 305, VIRGINIA GARDENS, FLORIDA 33166
Phone : (305)871-1530 . Fax : (305)871-1531
e-mail: tilteco@aol.com
EB-0006719
WALTER A. TILLIT Jr. P. E.
FLORIDA Lic. # 44167

OUTSWING SINGLE STEEL DOOR

MASTER SECURITY DOORS, INC.
702 SOUTH MILITARY TRAIL
DEERFIELD BEACH, FL 33442
PH (561)499-7558 FAX (561)499-7558

REV.No	DESCRIPTION	DATE	Drawn by: MIR/F.P./A.G.
1	OLD 07-149	02/29/12	DATE: 02/29/12

PRODUCT DESCRIPTION DOOR	DRAWING No 12-055
MODEL: EX - 4 DESCRIPTION: OS DOOR	SHEET 4 OF 20

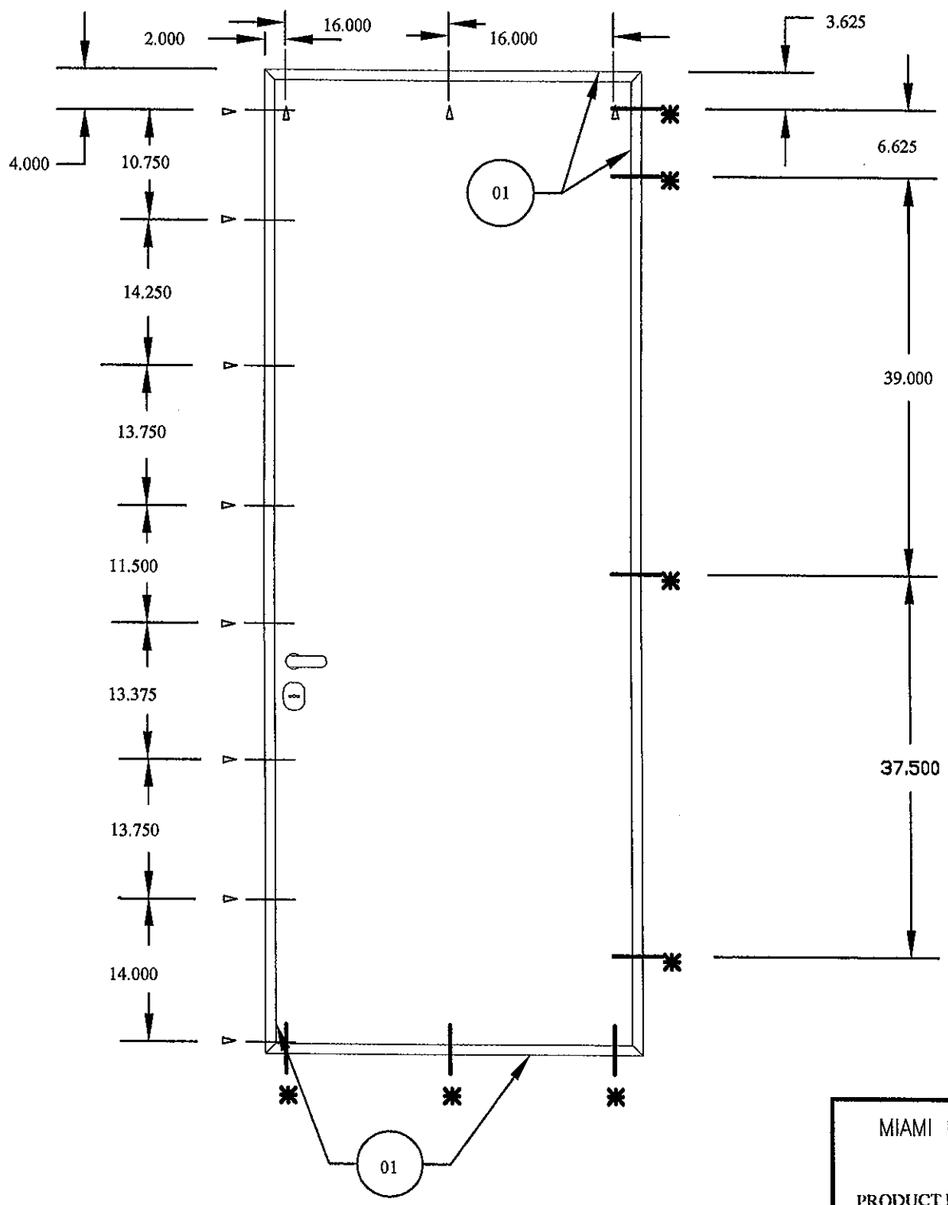

STILES (PART # 01), TOP AND BOTTOM RAILS (PART # 01) CONNECTIONS TO STEEL MAIN CASING (PART # 012)

FASTENER LEGEND		
	Description	Quantity
Δ	# 6 x 1/2" PAN HEAD PHILLIPS SMS	11
✱	# 4 X 1/2" PAN HEAD PHILLIPS SMS	7

MIAMI DADE COUNTY

PRODUCT REVISED
as complying with the Florida
Building Code
Acceptance No 12-0319.07
Expiration Date 04/11/2013
By
Miami Dade Product Control

WALTER A. TILLIT JR.
LICENSE
No. 44167
STATE OF
FLORIDA
PROFESSIONAL ENGINEER

P.E. SEAL/SIGNATURE/DATE

TILTECO INC.
TILLIT TESTING & ENGINEERING COMPANY
6355 N.W. 36th. St., Ste. 305, VIRGINIA GARDENS, FLORIDA 33166
Phone : (305)871-1530 . Fax : (305)871-1531
e-mail: tilteco@aol.com
EB-0006719
WALTER A. TILLIT Jr. P. E.
FLORIDA Lic. # 44167

OUTSWING SINGLE STEEL DOOR

MASTER SECURITY DOORS, INC.
702 SOUTH MILITARY TRAIL
DEERFIELD BEACH, FL 33442
PH (561)499-7558 FAX (561)499-7558

REV.No	DESCRIPTION	DATE	Drawn by: MIR/F.P./A.G.
1	OLD 07-149	02/29/12	DATE: 02/29/12

PRODUCT DESCRIPTION
DOOR

DRAWING No
12-055

MODEL: EX - 4
DESCRIPTION: OS DOOR

SHEET
5 OF 20

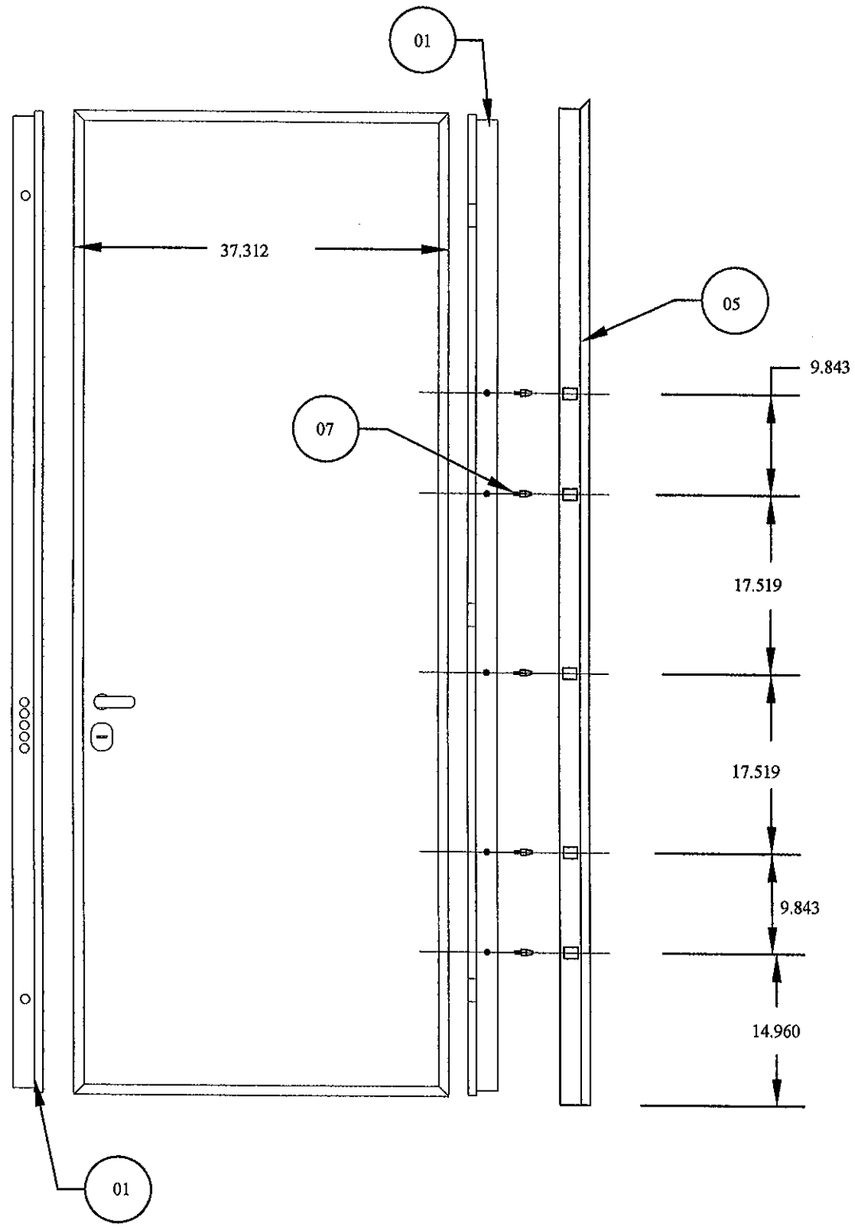

MIAMI DADE COUNTY

PRODUCT REVISED
as complying with the Florida
Building Code
Acceptance No 12-0319.07
Expiration Date 04/11/2013
By
Miami Dade Product Control

WALTER A. TILLIT JR.
LICENSE
No. 44167
STATE OF
FLORIDA
PROFESSIONAL ENGINEER

P.E. SEAL/SIGNATURE/DATE

TILTECO INC.

TILLIT TESTING & ENGINEERING COMPANY
6355 N.W. 36th. St., Ste. 305, VIRGINIA GARDENS, FLORIDA 33166
Phone : (305)871-1530 . Fax : (305)871-1531
e-mail: tilteco@aol.com
EB-0006719
WALTER A. TILLIT Jr. P. E.
FLORIDA Lic. # 44167

OUTSWING SINGLE STEEL DOOR

MASTER SECURITY DOORS, INC.
702 SOUTH MILITARY TRAIL
DEERFIELD BEACH, FL 33442
PH (561)499-7558 FAX (561)499-7558

REV.No	DESCRIPTION	DATE	Drawn by: MIR/F.P./A.G.
1	OLD 07-149	02/29/12	DATE: 02/29/12

PRODUCT DESCRIPTION
FIX BOLT LOCATIONS

DRAWING No
12-055

MODEL: EX - 4
DESCRIPTION: OS DOOR

SHEET
6 OF 20

NOTE: NO WELDING WAS USED TO CONNECT SUBFRAME (PART # 04) TO FRAME (PART # 05) AT SECTIONS FOR HEAD AND JAMBS.
TWO 2" X 4" P.T. MINIMUM WOOD BUCKS REQUIRED AT JAMB, HEADER AND SILL.

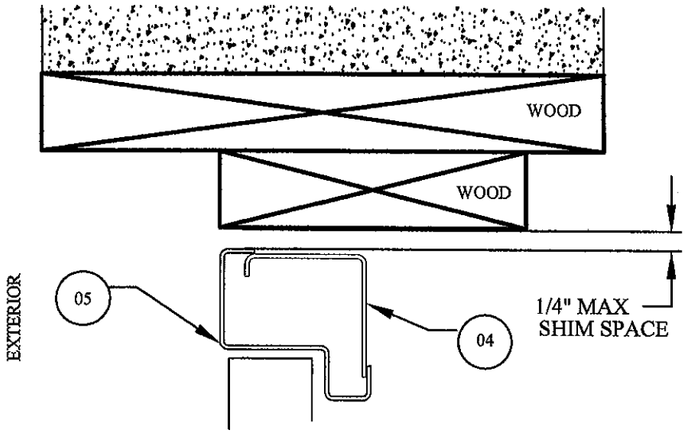

FRAME AND SUB-FRAME HEADER
SECTION A-A

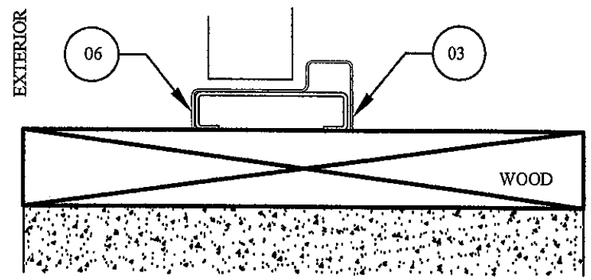

SILL
SECTION B-B

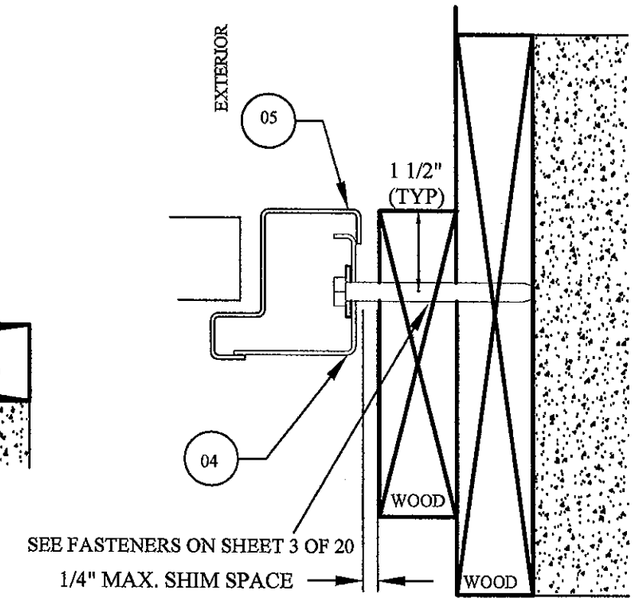

SECTION C-C

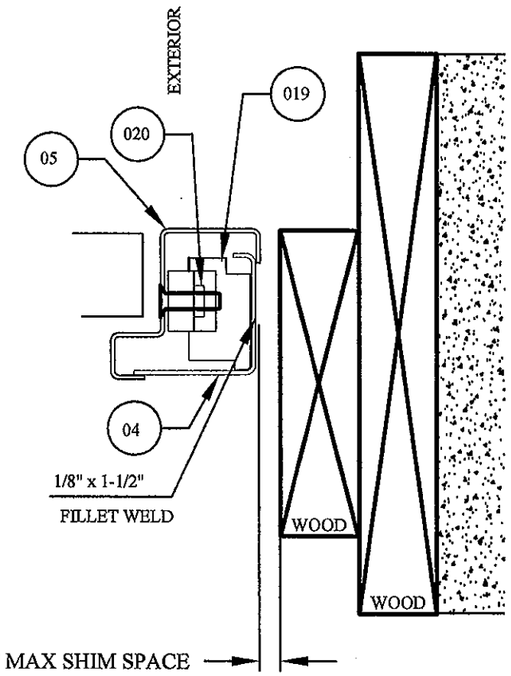

FRAME AND SUB-FRAME JAMBS

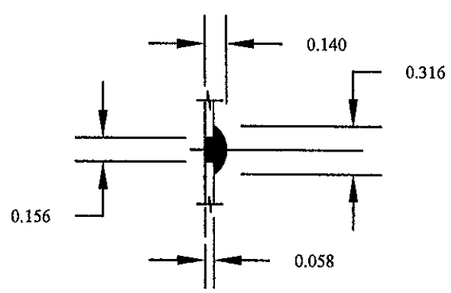

WELD TYPE

WELDING SPECIFICATIONS
WELDS: INERT GAS SHIELDED WELDING TOT 3 BEADINGS.
GAS COMPOSITION: ARGON + CO2
MECHANICAL PROPERTIES: TENSILE STRENGTH 72,500 P.S.I.
YEILD STRENGTH 62,500 P.S.I., ULTIMATE ELONGATION 20%.
WELDING PARAMETERS: WIRE SPEED 2"/s, TENSION 25 v, CURRENT 220A
ELECTRODES TO BE AWS A 5.18, E70XX

MIAMI DADE COUNTY

PRODUCT REVISED
as complying with the Florida
Building Code
Acceptance No 12-0319.07
Expiration Date 04/11/2013
By
Miami Dade Product Control

WALTER A. TILLIT JR.
LICENSE
No. 44167
STATE OF
FLORIDA
PROFESSIONAL ENGINEER

P.E. SEAL/SIGNATURE/DATE

TILTECO INC.
TILLIT TESTING & ENGINEERING COMPANY
6355 N.W. 36th. St., Ste. 305, VIRGINIA GARDENS, FLORIDA 33166
Phone : (305)871-1530 , Fax : (305)871-1531
e-mail: tilteco@aol.com
EB-0006719
WALTER A. TILLIT Jr. P. E.
FLORIDA Lic. # 44167

OUTSWING SINGLE STEEL DOOR

MASTER SECURITY DOORS, INC.
702 SOUTH MILITARY TRAIL
DEERFIELD BEACH, FL 33442
PH (561)499-7558 FAX (561)499-7558

REV.No	DESCRIPTION	DATE	Drawn by: MIR/F.P./A.G.
1	OLD 07-149	02/29/12	DATE: 02/29/12

PRODUCT DESCRIPTION
SECTIONS AT FRAME/SUBFRAME ASSEMBLIES

DRAWING No
12-055

MODEL: EX - 4
DESCRIPTION: OS DOOR

SHEET
7 OF 20

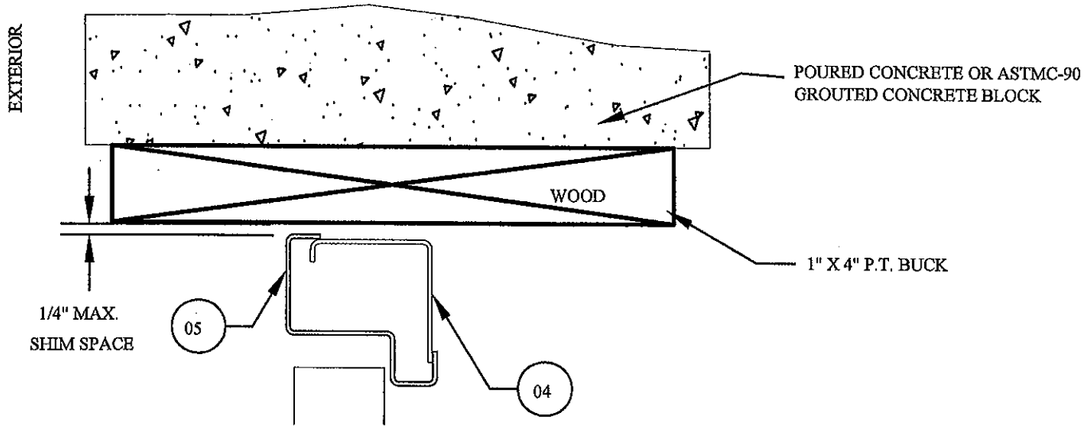

FRAME AND SUB-FRAME HEADER

SECTION A-A

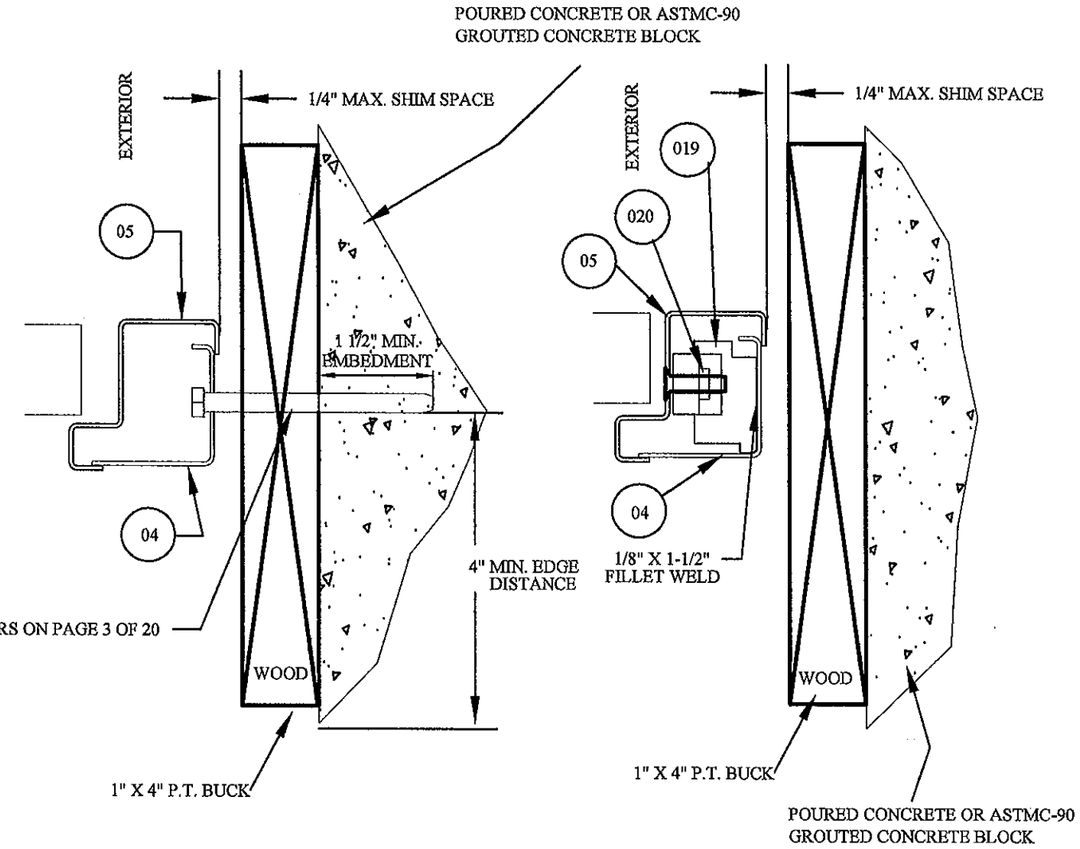

FRAME AND SUB-FRAME JAMBS

SECTION C-C

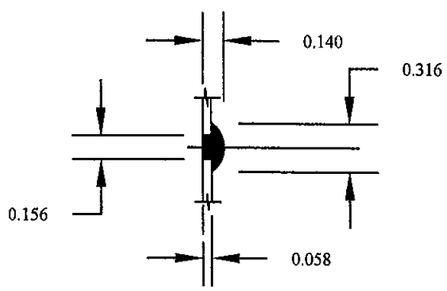

Weld type

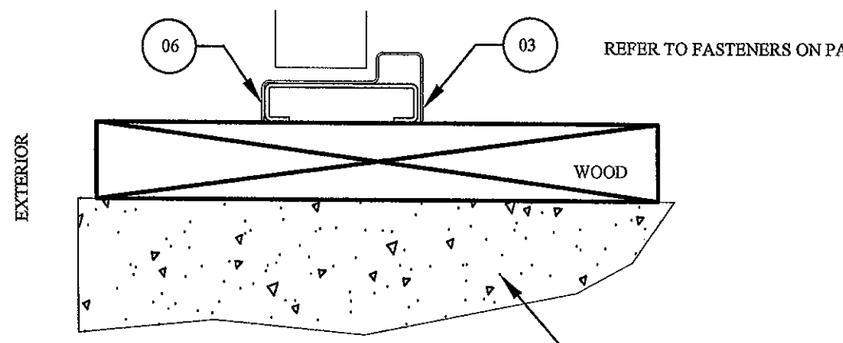

SILL

SECTION B-B

NOTE: NO WELDING WAS USED TO CONNECT SUBFRAME (PART #04) TO FRAME (PART #05) AT SECTIONS FOR HEAD AND JAMBS.

WELDING SPECIFICATIONS
WELDS: INERT GAS SHIELDED WELDING TOT 3 BEADINGS.
GAS COMPOSITION: ARGON + CO2
MECHANICAL PROPERTIES: TENSILE STRENGTH 72,500 P.S.I.
YEILD STRENGTH 62,500 P.S.I., ULTIMATE ELONGATION 20%.
WELDING PARAMETERS: WIRE SPEED 2"/s, TENSION 25 v, CURRENT 220A
ELECTRODES TO BE AWS A 5.18, E70XX

MIAMI DADE COUNTY

PRODUCT REVISED
as complying with the Florida
Building Code
Acceptance No 12-0319.07
Expiration Date 04/11/2013
By
Miami Dade Product Control

WALTER A. TILLIT JR.
LICENSE
No. 44167
STATE OF
FLORIDA
PROFESSIONAL ENGINEER

P.E. SEAL/SIGNATURE/DATE

TILTECO INC.

TILLIT TESTING & ENGINEERING COMPANY
8355 N.W. 36th. St., Ste. 305, VIRGINIA GARDENS, FLORIDA 33166
Phone : (305)871-1530 . Fax : (305)871-1531
e-mail: tilteco@aol.com
EB-0006719
WALTER A. TILLIT Jr. P. E.
FLORIDA Lic. # 44167

OUTSWING SINGLE STEEL DOOR

MASTER SECURITY DOORS, INC.
702 SOUTH MILITARY TRAIL
DEERFIELD BEACH, FL 33442
PH (561)499-7558 FAX (561)499-7558

REV.No	DESCRIPTION	DATE	Drawn by: MIR/F.P./A.G.
1	OLD 07-149	02/29/12	DATE: 02/29/12

PRODUCT DESCRIPTION
SECTIONS AT FRAME/SUBFRAME ASSEMBLIES

DRAWING No
12-055

MODEL: EX - 4
DESCRIPTION: OS DOOR

SHEET
8 OF 20

WELDING SPECIFICATIONS
WELDS: INERT GAS SHIELDED WELDING TOT 23 BEADINGS
GAS COMPOSITION: ARGON + CO2
MECHANICAL PROPERTIES: TENSILE STRENGTH 72,500 P.S.I.
YEILD STRENGTH 62,500 P.S.I., ULTIMATE ELONGATION 20%.
WELDING PARAMETERS: WIRE SPEED 2"/s, TENSION 25 v, CURRENT 220A
ELECTRODES TO BE AWS A 5.18, E70XX

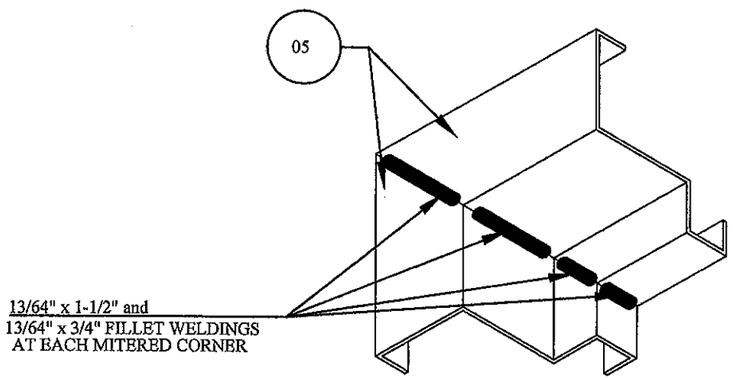

FRAME JAMB TO FRAME HEAD CONNECTION

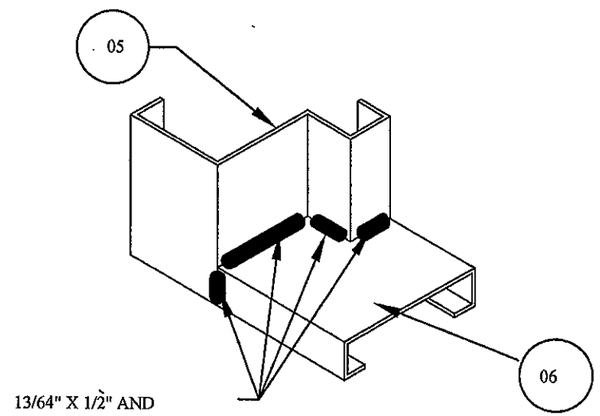

FRAME SILL TO FRAME JAMB CONNECTION

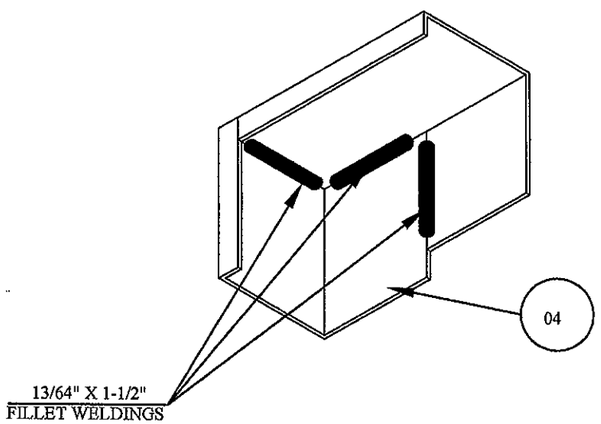

SUB-FRAME HEAD TO SUB-FRAME JAMBS CONNECTION

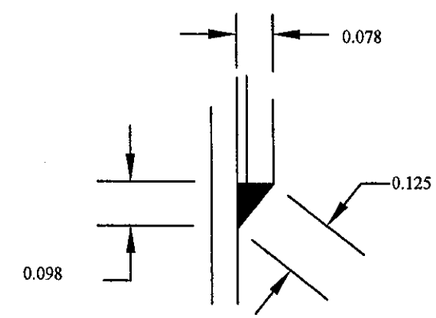

WELD TYPE

MIAMI DADE COUNTY

PRODUCT REVISED
as complying with the Florida
Building Code
Acceptance No 12-0319.07
Expiration Date 04/11/2013
By
Miami Dade Product Control

WALTER A. TILLIT JR.
LICENSE
No. 44167
3/12/12
STATE OF FLORIDA
PROFESSIONAL ENGINEER

P.E. SEAL/SIGNATURE/DATE

TILTECO INC.

TILLIT TESTING & ENGINEERING COMPANY
6355 N.W. 36th. St., Ste. 305, VIRGINIA GARDENS, FLORIDA 33166
Phone : (305)871-1530 , Fax : (305)871-1531
e-mail: tilteco@aol.com
EB-0006719
WALTER A. TILLIT Jr. P. E.
FLORIDA Lic. # 44167

OUTSWING SINGLE STEEL DOOR

MASTER SECURITY DOORS, INC.
702 SOUTH MILITARY TRAIL
DEERFIELD BEACH, FL 33442
PH (561)499-7558 FAX (561)499-7558

REV.No	DESCRIPTION	DATE	Drawn by: MIR/F.P./A.G.
1	OLD 07-149	02/29/12	DATE: 02/29/12

PRODUCT DESCRIPTION CORNERS ASSEMBLY	DRAWING No 12-055
MODEL: EX - 4 DESCRIPTION: OS DOOR	SHEET 9 OF 20

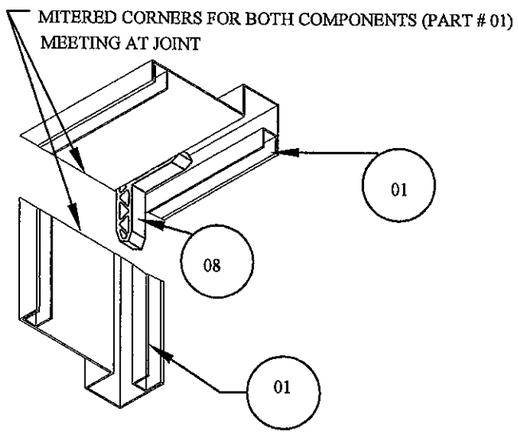

DOOR STILE TO TOP RAIL CONNECTION

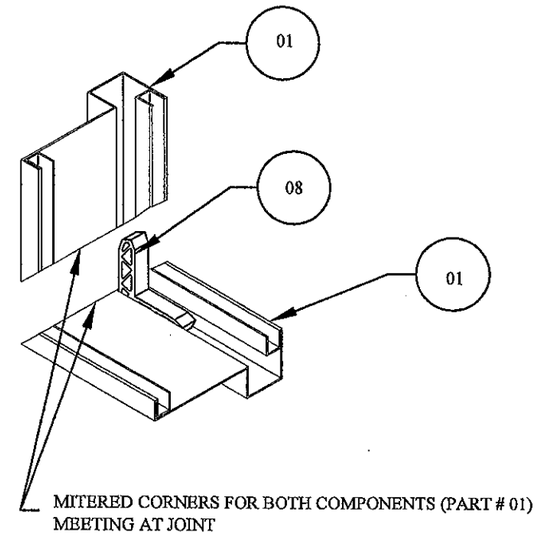

DOOR STILE TO BOTTOM RAIL CONNECTION

MIAMI DADE COUNTY

PRODUCT REVISED
as complying with the Florida
Building Code
Acceptance No 12-0319.07
Expiration Date 04/11/2013
By
Miami Dade Product Control

WALTER A. TILLIT JR.
LICENSE
No. 44167
3/1/12
STATE OF
FLORIDA
PROFESSIONAL ENGINEER

P.E. SEAL/SIGNATURE/DATE

TILTECO INC.

TILLIT TESTING & ENGINEERING COMPANY
6355 N.W. 36th. St., Ste. 305, VIRGINIA GARDENS, FLORIDA 33166
Phone : (305)871-1530 . Fax : (305)871-1531
e-mail: tilteco@aol.com
EB-0006719
WALTER A. TILLIT Jr. P. E.
FLORIDA Lic. # 44167

OUTSWING SINGLE STEEL DOOR

MASTER SECURITY DOORS, INC.

702 SOUTH MILITARY TRAIL
DEERFIELD BEACH, FL 33442
PH (561)499-7558 FAX (561)499-7558

REV.No	DESCRIPTION	DATE	Drawn by: MIR/F.P./A.G.
1	OLD 07-149	02/29/12	DATE: 02/29/12

PRODUCT DESCRIPTION CORNERS ASSEMBLY	DRAWING No 12-055
MODEL: EX - 4 DESCRIPTION: OS DOOR	SHEET 10 OF 20

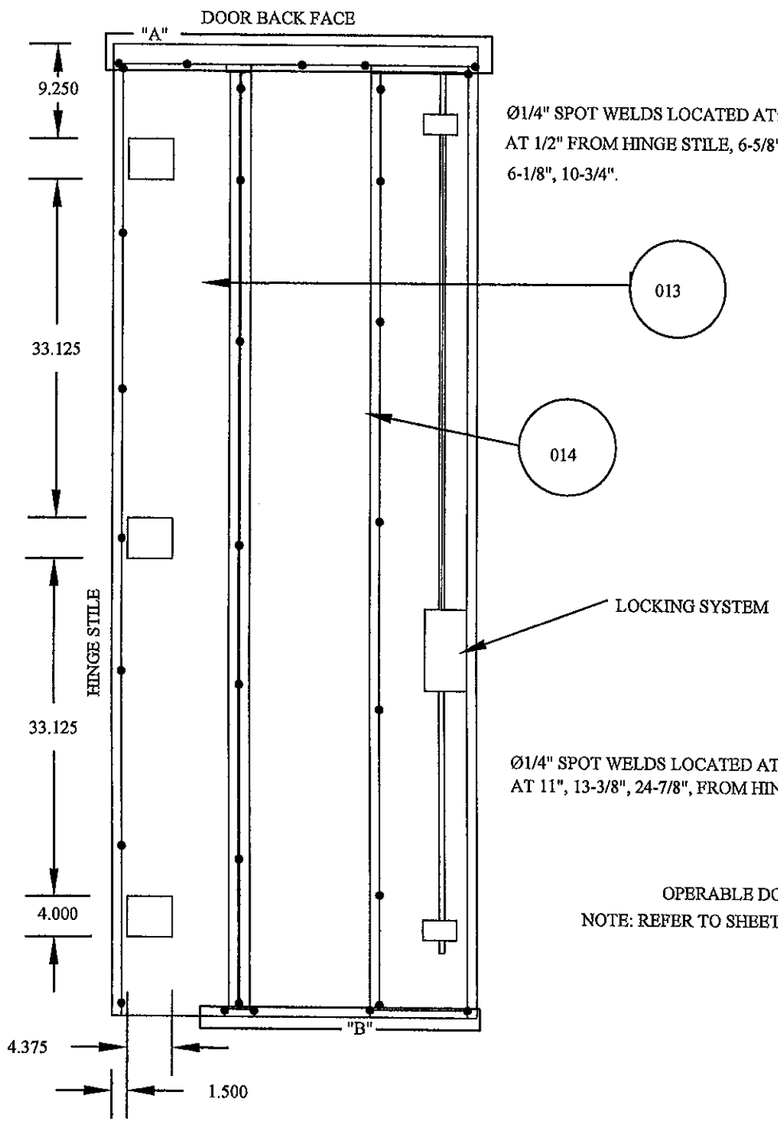

Ø1/4" SPOT WELDS LOCATED AT: "A"
AT 1/2" FROM HINGE STILE, 6-5/8", 11-1/4"
6-1/8", 10-3/4".

Ø1/4" SPOT WELDS LOCATED AT: "B"
AT 11", 13-3/8", 24-7/8", FROM HINGE STILE

OPERABLE DOOR
NOTE: REFER TO SHEET 12 FOR SECTIONS.

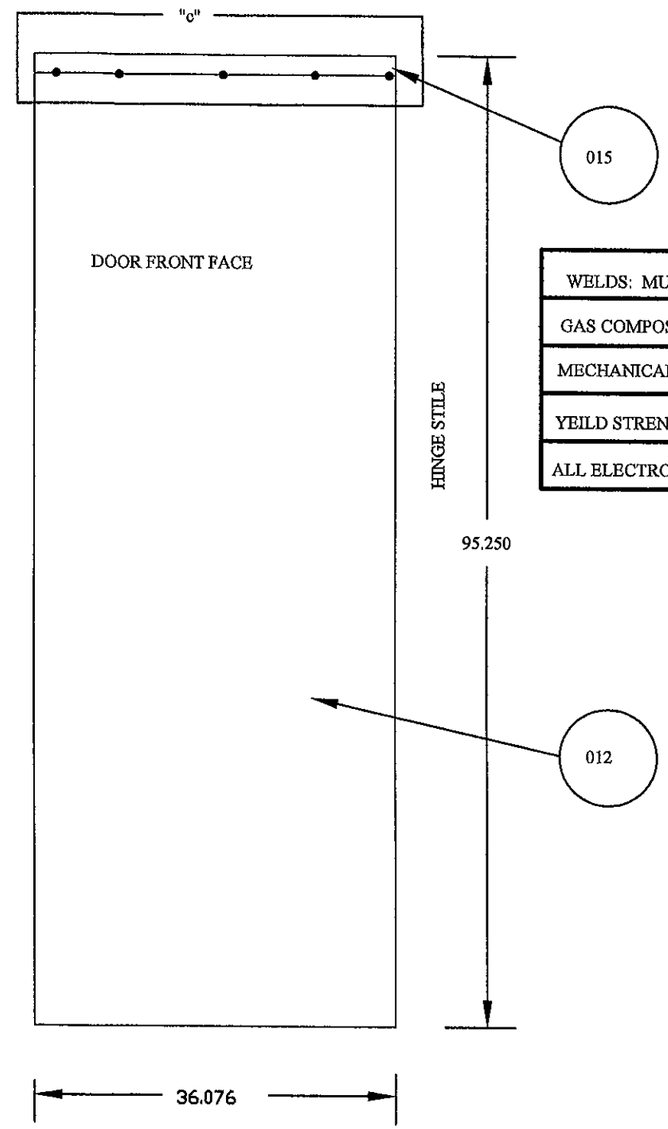

Ø1/4" SPOT WELDS LOCATED AT: "C"
AT 3/4" FROM HINGE STILE, 7-1/8", 9", 10-1/4", 6-1/8".

WELDS: MULTIPLE IMPULSE SPOT WELDING TOT 54 SPOTS.
GAS COMPOSITION: ARGON + CO2
MECHANICAL PROPERTIES: TENSILE STRENGTH 72,500 P.S.I.
YEILD STRENGTH 62,250 P.S.I.
ALL ELECTRODES AWS A 5.18 E70XX

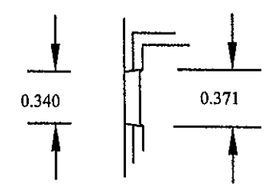

WELD TYPE

COLUMNS FROM HINGE STILE: Ø1/4" SPOT WELDS LOCATED AT:

FIRST COLUMN: AT 1-1/4" FROM BOTTOM, 15-1/2", 17-1/8", 13", 14-5/8", 15-1/4", 16-1/8"

SECOND COLUMN: AT 1-1/4" FROM BOTTOM, 14-1/4", 17-1/8", 13-5/8", 20", 15-3/4", 9-1/4"

THIRD COLUMN: 1-1/4" FROM BOTTOM, 10-3/4", 18-1/4", 18-3/8", 18-3/8", 15", 9"

MIAMI DADE COUNTY

PRODUCT REVISED
as complying with the Florida
Building Code
Acceptance No 12-0319.07
Expiration Date 04/11/2013
By
Miami Dade Product Control

WALTER A. TILLIT JR.
LICENSE
No. 44167
3/12/12
STATE OF FLORIDA
PROFESSIONAL ENGINEER

P.E. SEAL/SIGNATURE/DATE

TILTECO INC.

TILLIT TESTING & ENGINEERING COMPANY
6355 N.W. 36th. St., Ste. 305, VIRGINIA GARDENS, FLORIDA 33166
Phone : (305)871-1530 . Fax : (305)871-1531
e-mail: tilteco@aol.com
EB-0006719
WALTER A. TILLIT Jr. P. E.
FLORIDA Lic. # 44167

OUTSWING SINGLE STEEL DOOR

MASTER SECURITY DOORS, INC.
702 SOUTH MILITARY TRAIL
DEERFIELD BEACH, FL 33442
PH (561)499-7558 FAX (561)499-7558

REV.No	DESCRIPTION	DATE	Drawn by: MIR/F.P./A.G.
1	OLD 07-149	02/29/12	DATE: 02/29/12

PRODUCT DESCRIPTION DOOR REINFORCEMENTS	DRAWING No 12-055
MODEL: EX - 4 DESCRIPTION: OS DOOR	SHEET 11 OF 20

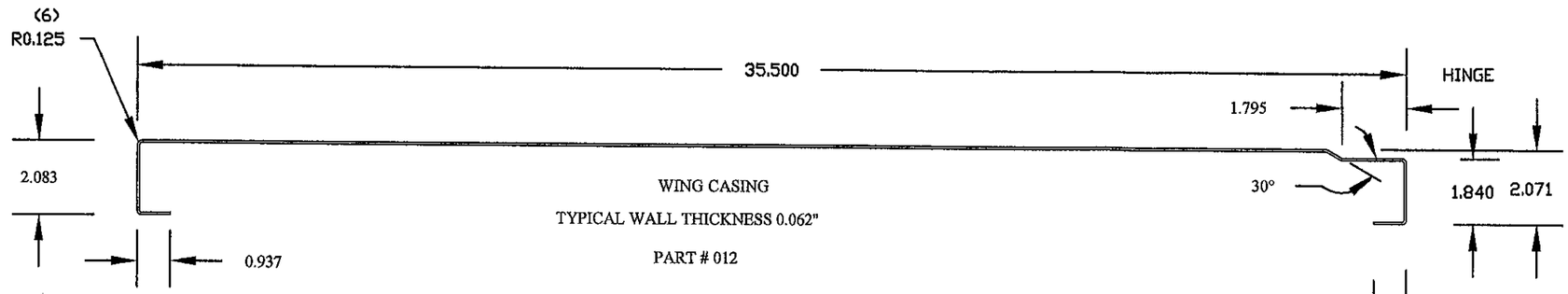

WING CASING

TYPICAL WALL THICKNESS 0.062"

PART # 012

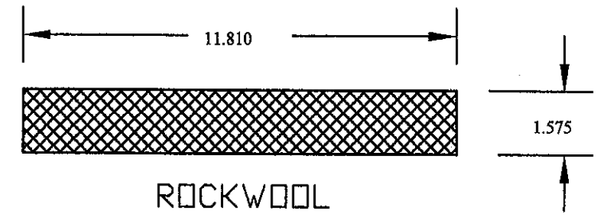

ROCKWOOL SPECIFICATIONS:
MINERAL WOOL, MODEL TERVOL I 220,
MANUFACTURED BY TERMOLAN, ITALY;
WITH 3.6 P.S.I. COMPRESSIVE STRENGTH
PER ASTM C-165-83, AND 6.2 LB/CUBIC FEET DENSITY

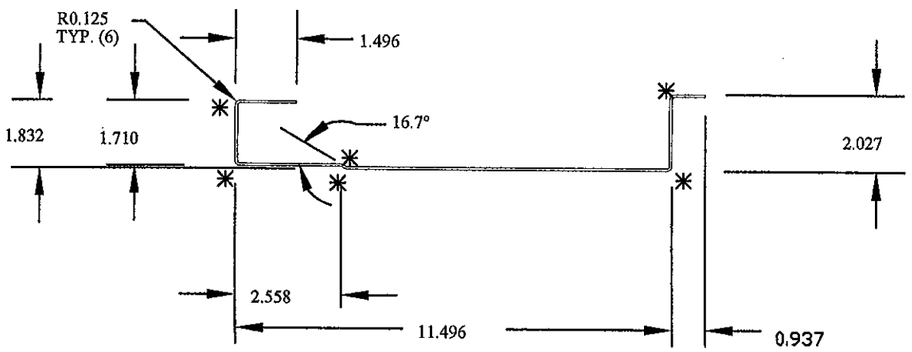

TYPICAL WALL THICKNESS 0.062"

PART # 013

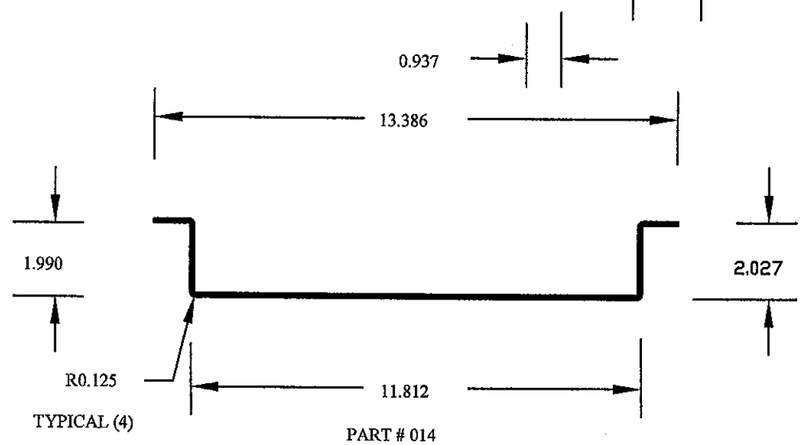

PART # 014

TYPICAL WALL THICKNESS 0.062"

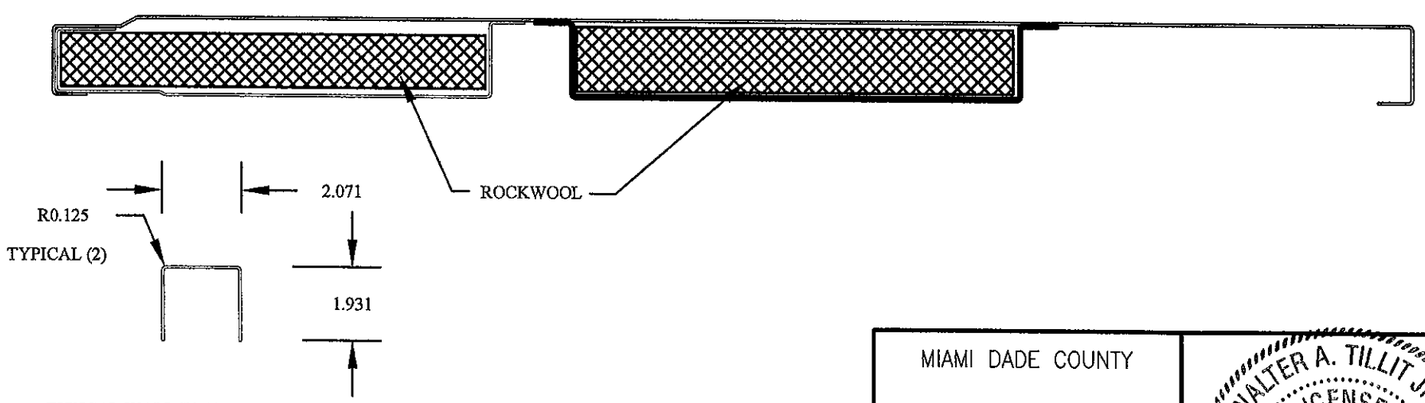

TYPICAL WALL THICKNESS 0.062"

PART # 015

MIAMI DADE COUNTY

PRODUCT REVISED
as complying with the Florida
Building Code
Acceptance No 12-0319.07
Expiration Date 04/11/2013
By
Miami Dade Product Control

WALTER A. TILLIT JR.
LICENSE
NO. 44167
STATE OF
FLORIDA
PROFESSIONAL ENGINEER

P.E. SEAL/SIGNATURE/DATE

TILTECO INC.

TILLIT TESTING & ENGINEERING COMPANY
6355 N.W. 36th. St., Ste. 305, VIRGINIA GARDENS, FLORIDA 33166
Phone : (305)871-1530 . Fax : (305)871-1531
e-mail: tilteco@aol.com
EB-0006719
WALTER A. TILLIT Jr. P. E.
FLORIDA Lic. # 44167

OUTSWING SINGLE STEEL DOOR

MASTER SECURITY DOORS, INC.

702 SOUTH MILITARY TRAIL
DEERFIELD BEACH, FL 33442
PH (561)499-7558 FAX (561)499-7558

REV.No	DESCRIPTION	DATE	Drawn by: MIR/F.P./A.G.
1	OLD 07-149	02/29/12	DATE: 02/29/12

PRODUCT DESCRIPTION
DOOR REINFORCEMENTS

DRAWING No
12-055

MODEL: EX - 4
DESCRIPTION: OS DOOR

SHEET
12 OF 20

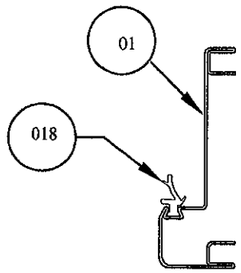

LOCK STILE

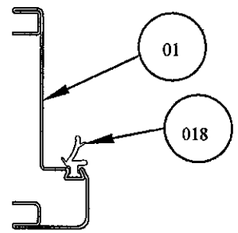

HINGE STILE

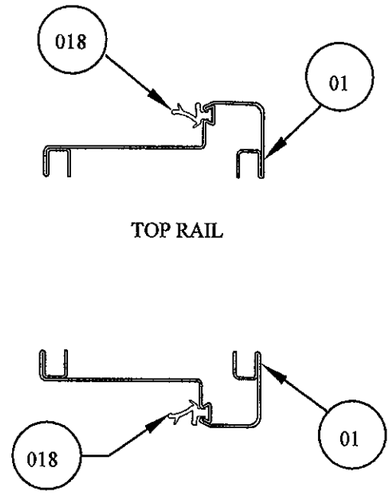

TOP RAIL

BOTTOM RAIL

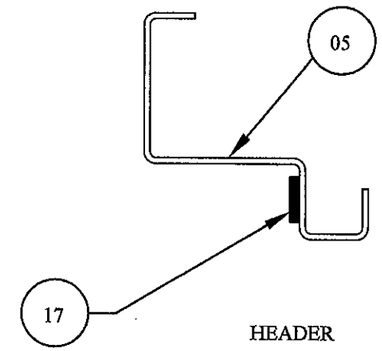

HEADER

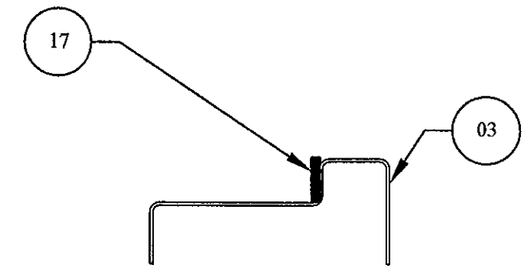

THRESHOLD

COMPRESSION VINYL

PART # 018

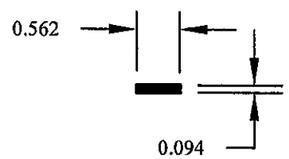

CLOSE CELL FOAM

PART # 017

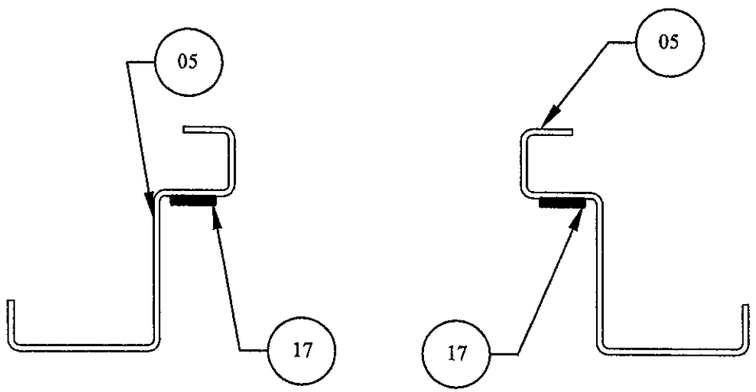

JAMBS

MIAMI DADE COUNTY

PRODUCT REVISED
as complying with the Florida
Building Code
Acceptance No 12-0319.07
Expiration Date 04/11/2013
By
Miami Dade Product Control

WALTER A. TILLIT JR.
LICENSE
No. 44167
STATE OF
FLORIDA
PROFESSIONAL ENGINEER

P.E. SEAL/SIGNATURE/DATE

TILTECO INC.

TILLIT TESTING & ENGINEERING COMPANY
8355 N.W. 36th. St., Ste. 305, VIRGINIA GARDENS, FLORIDA 33166
Phone : (305)871-1530 . Fax : (305)871-1531
e-mail: tilteco@aol.com
EB-0006719
WALTER A. TILLIT Jr. P. E.
FLORIDA Lic. # 44167

OUTSWING SINGLE STEEL DOOR

MASTER SECURITY DOORS, INC.
702 SOUTH MILITARY TRAIL
DEERFIELD BEACH, FL 33442
PH (561)499-7558 FAX (561)499-7558

REV.No	DESCRIPTION	DATE	Drawn by: MIR/F.P./A.G.
1	OLD 07-149	02/29/12	DATE: 02/29/12

PRODUCT DESCRIPTION
WEATHER-STRIPS

DRAWING No
12-055

MODEL: EX - 4
DESCRIPTION: OS DOOR

SHEET
13 OF 20

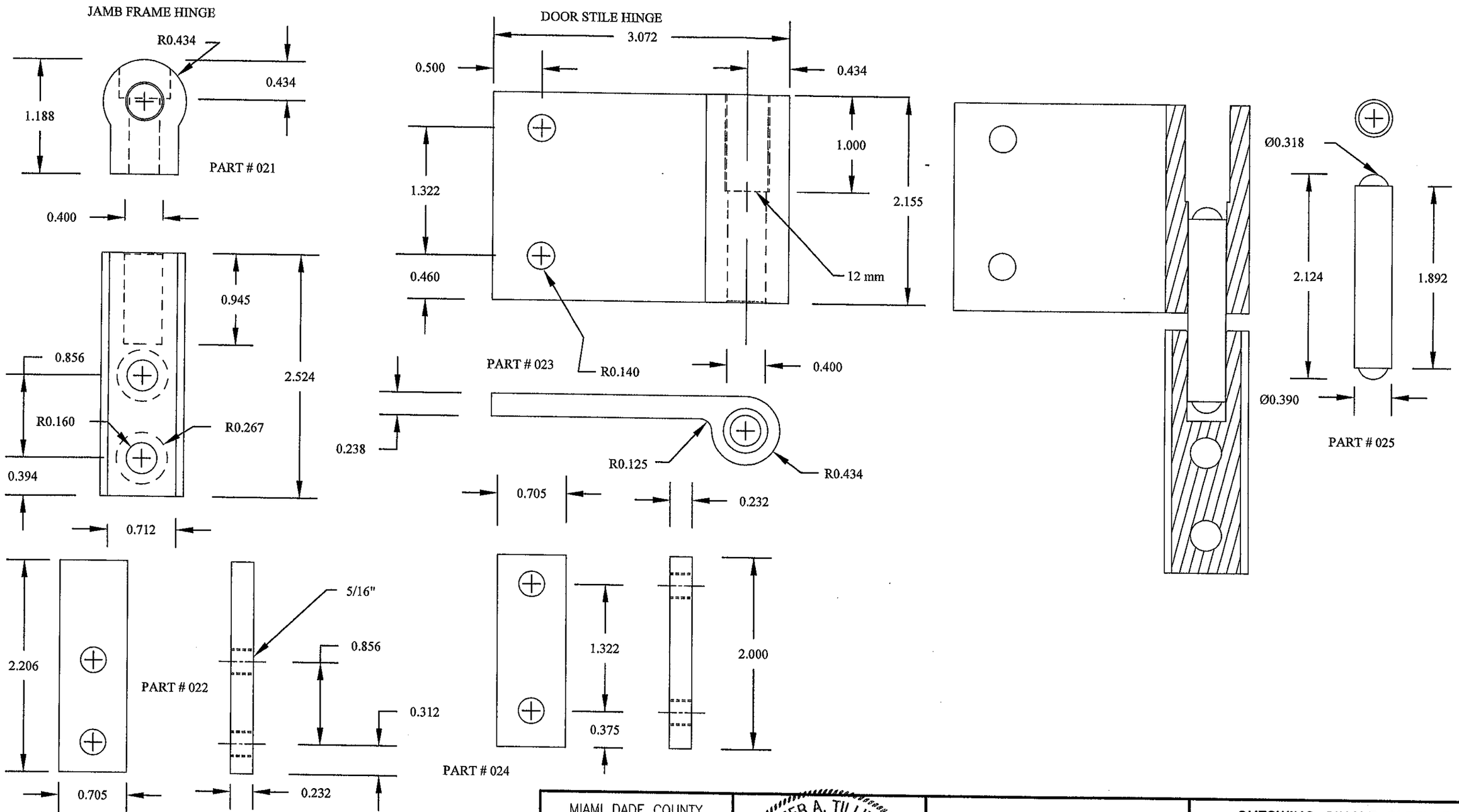

MIAMI DADE COUNTY

PRODUCT REVISED
as complying with the Florida
Building Code
Acceptance No 12-0319.07
Expiration Date 04/11/2013
By
Miami Dade Product Control

WALTER A. TILLIT JR.
LICENSE
NO. 44167
STATE OF FLORIDA
PROFESSIONAL ENGINEER
P.E. SEAL/SIGNATURE/DATE

TILTECO INC.

TILLIT TESTING & ENGINEERING COMPANY
6355 N.W. 36th. St., Ste. 305, VIRGINIA GARDENS, FLORIDA 33166
Phone : (305)871-1530 . Fax : (305)871-1531
e-mail: tilteco@aol.com
EB-0006719
WALTER A. TILLIT Jr. P. E.
FLORIDA Lic. # 44167

OUTSWING SINGLE STEEL DOOR

MASTER SECURITY DOORS, INC.
702 SOUTH MILITARY TRAIL
DEERFIELD BEACH, FL 33442
PH (561)499-7558 FAX (561)499-7558

REV.No	DESCRIPTION	DATE	Drawn by: MIR/F.P./A.G.
1	OLD 07-149	02/29/12	DATE: 02/29/12

PRODUCT DESCRIPTION
HINGES

DRAWING No
12-055

MODEL: EX - 4
DESCRIPTION: OS DOOR

SHEET
14 OF 20

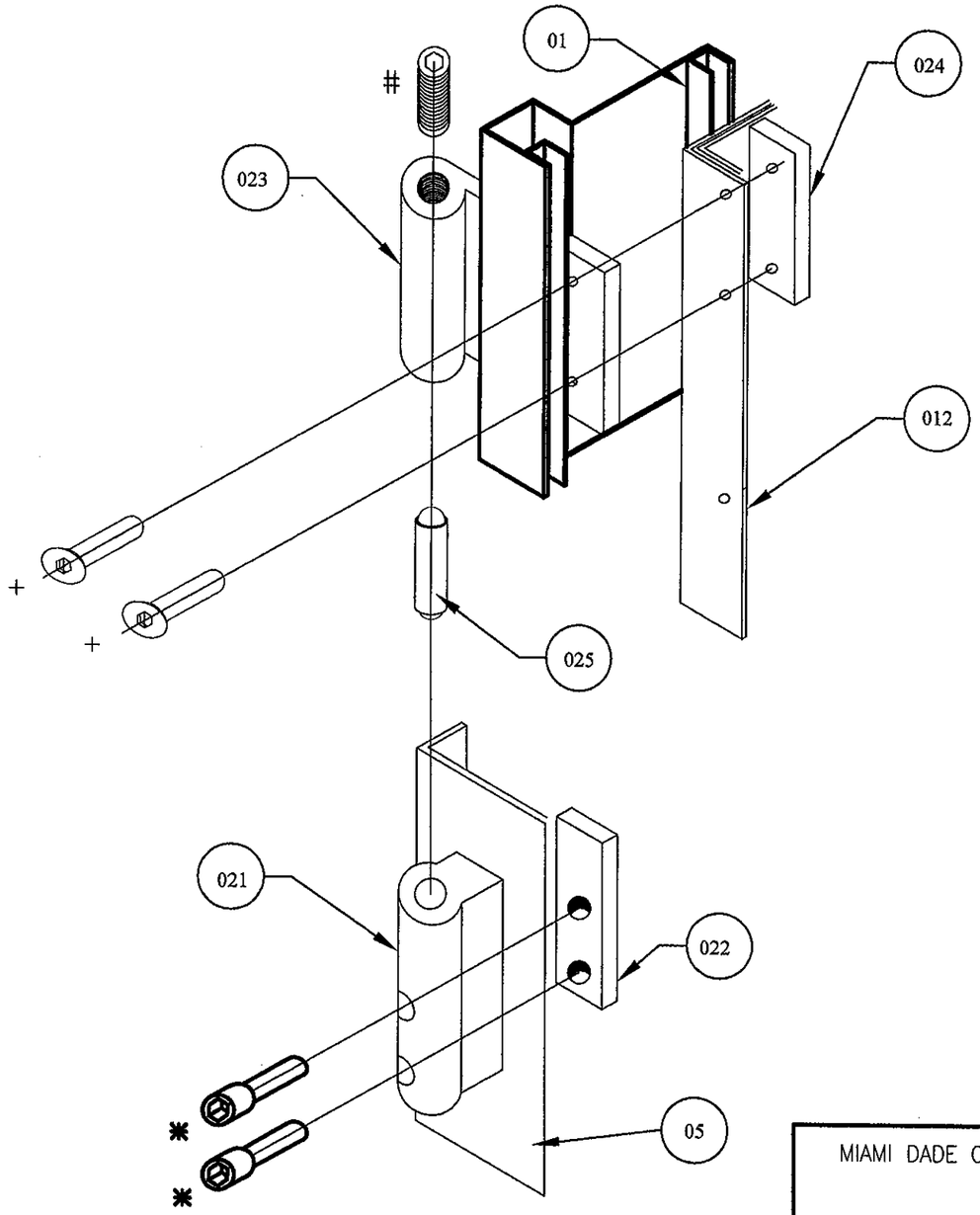

FASTENER LEGEND		
	DESCRIPTION	QUANTITY
*	5/16" X 1-3/16" SOCKET HEAD CAL SCREW	12
+	5/16" X 0.654" STAR FLAT HEAD SCREW	12
#	15/32" X 0.981" SET SCREW	6

MIAMI DADE COUNTY

PRODUCT REVISED
as complying with the Florida
Building Code
Acceptance No 12-0319.07
Expiration Date 04/11/2013
By
Miami Dade Product Control

WALTER A. TILLIT JR.
LICENSE
No. 44167
STATE OF
FLORIDA
PROFESSIONAL ENGINEER

P.E. SEAL/SIGNATURE/DATE

TILTECO INC.
TILLIT TESTING & ENGINEERING COMPANY
6355 N.W. 36th. St., Ste. 305, VIRGINIA GARDENS, FLORIDA 33166
Phone : (305)871-1530 . Fax : (305)871-1531
e-mail: tilteco@aol.com
EB-0006719
WALTER A. TILLIT Jr. P. E.
FLORIDA Lic. # 44167

OUTSWING SINGLE STEEL DOOR

MASTER SECURITY DOORS, INC.
702 SOUTH MILITARY TRAIL
DEERFIELD BEACH, FL 33442
PH (561)499-7558 FAX (561)499-7558

REV.No	DESCRIPTION	DATE	Drawn by: MIR/F.P./A.G.
1	OLD 07-149	02/29/12	DATE: 02/29/12

PRODUCT DESCRIPTION
HINGE ASSEMBLY

DRAWING No
12-055

MODEL: EX - 4
DESCRIPTION: OS DOOR

SHEET
15 OF 20

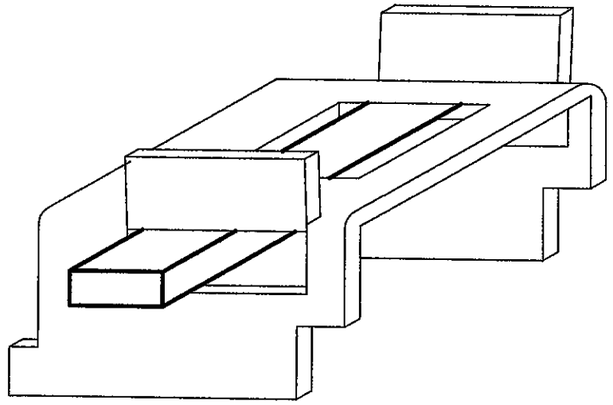

RETENTION HOUSING
PART # 019

TYPICAL WALL THICKNESS 0.093"

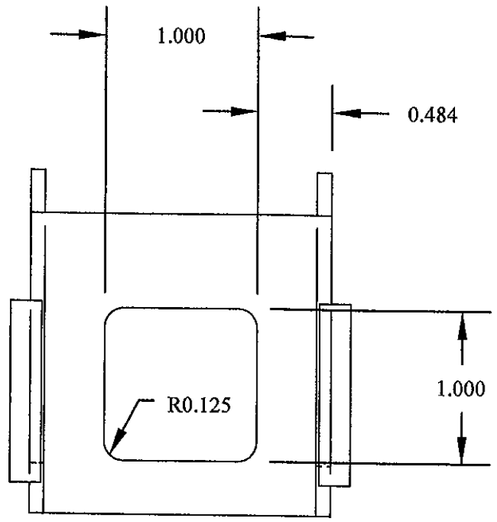

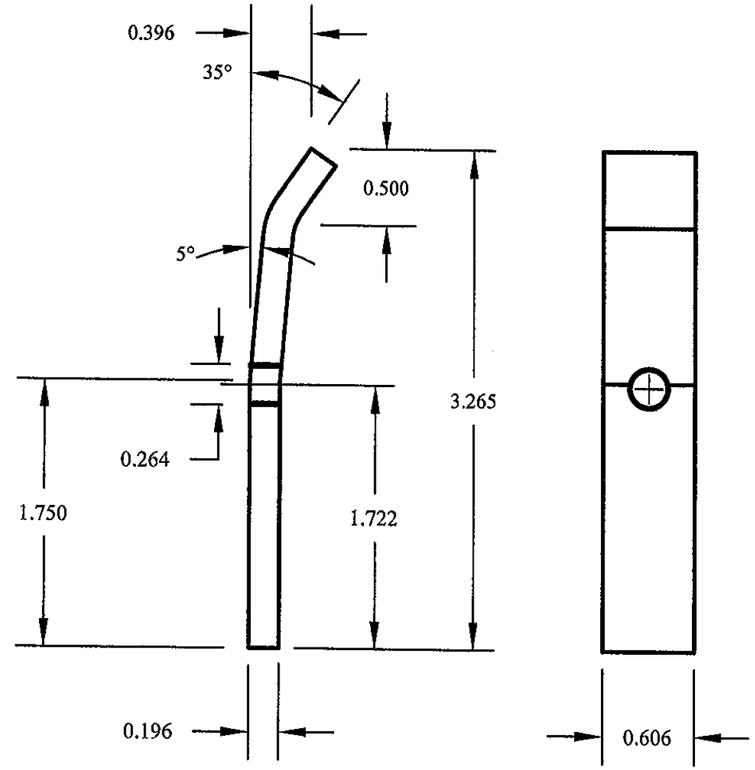

RETENTION CLIP
PART # 020

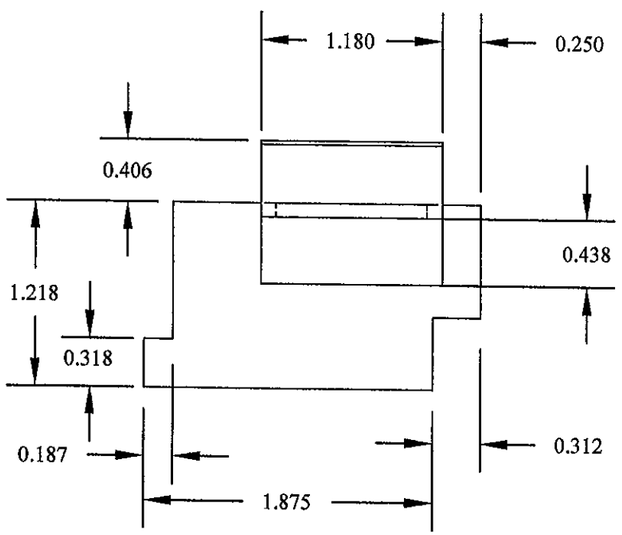

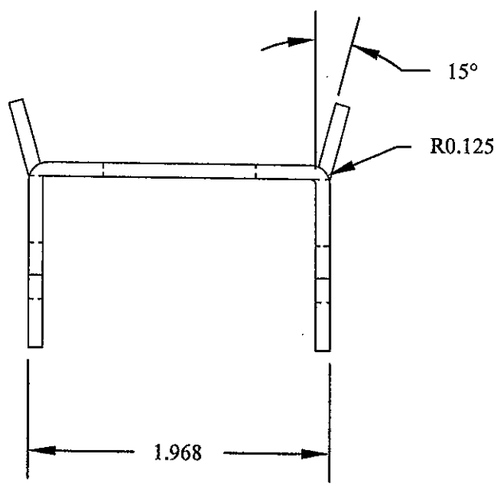

MIAMI DADE COUNTY

PRODUCT REVISED
as complying with the Florida
Building Code
Acceptance No 12-0319.07
Expiration Date 04/11/2013
By
Miami Dade Product Control

WALTER A. TILLIT JR.
LICENSE
No. 44167
STATE OF
FLORIDA
PROFESSIONAL ENGINEER

P.E. SEAL/SIGNATURE/DATE

TILTECO INC.

TILLIT TESTING & ENGINEERING COMPANY
6355 N.W. 36th. St., Ste. 305, VIRGINIA GARDENS, FLORIDA 33166
Phone : (305)871-1530 . Fax : (305)871-1531
e-mail: tilteco@aol.com
EB-0006719
WALTER A. TILLIT Jr. P. E.
FLORIDA Lic. # 44167

OUTSWING SINGLE STEEL DOOR

MASTER SECURITY DOORS, INC.
702 SOUTH MILITARY TRAIL
DEERFIELD BEACH, FL 33442
PH (561)499-7558 FAX (561)499-7558

REV.No	DESCRIPTION	DATE	Drawn by: MIR/F.P./A.G.
1	OLD 07-149	02/29/12	DATE: 02/29/12

PRODUCT DESCRIPTION
RETENTION CLIP / RETENTION HOUSING

DRAWING No
12-055

MODEL: EX - 4
DESCRIPTION: OS DOOR

SHEET
16 OF 20

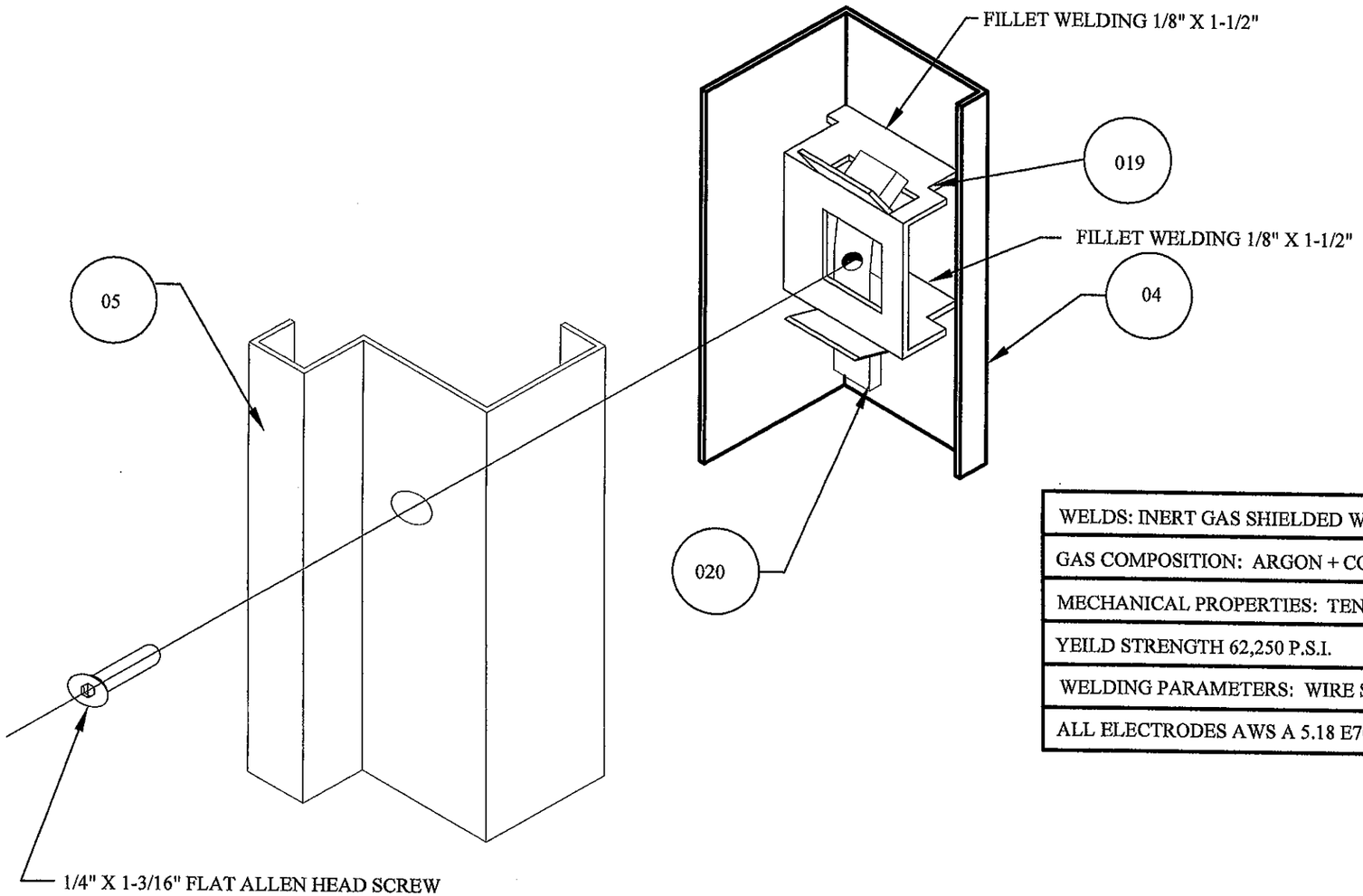

FRAME TO SUB-FRAME ASSEMBLY

WELDS: INERT GAS SHIELDED WELDING TOT 3 BEADINGS.
GAS COMPOSITION: ARGON + CO2
MECHANICAL PROPERTIES: TENSILE STRENGTH 72,500 P.S.I.
YEILD STRENGTH 62,250 P.S.I.
WELDING PARAMETERS: WIRE SPEED 2"/s, TENSION 25 v, CURRENT 220A
ALL ELECTRODES AWS A 5.18 E70XX

MIAMI DADE COUNTY

PRODUCT REVISED
as complying with the Florida
Building Code
Acceptance No 12-0319.07
Expiration Date 04/11/2013
By
Miami Dade Product Control

WALTER A. TILLIT JR.
LICENSE
No. 44167
STATE OF
FLORIDA
PROFESSIONAL ENGINEER

P.E. SEAL/SIGNATURE/DATE

TILTECO INC.
TILLIT TESTING & ENGINEERING COMPANY
6355 N.W. 36th. St., Ste. 305, VIRGINIA GARDENS, FLORIDA 33166
Phone : (305)871-1530 . Fax : (305)871-1531
e-mail: tilteco@aol.com
EB-0006719
WALTER A. TILLIT Jr. P. E.
FLORIDA Lic. # 44167

OUTSWING SINGLE STEEL DOOR

MASTER SECURITY DOORS, INC.
702 SOUTH MILITARY TRAIL
DEERFIELD BEACH, FL 33442
PH (561)499-7558 FAX (561)499-7558

REV.No	DESCRIPTION	DATE	Drawn by: MIR/F.P./A.G.
1	OLD 07-149	02/29/12	DATE: 02/29/12

PRODUCT DESCRIPTION FRAME TO SUB-FRAME ASSEMBLY	DRAWING No 12-055
MODEL: EX - 4 DESCRIPTION: OS DOOR	SHEET 17 OF 20

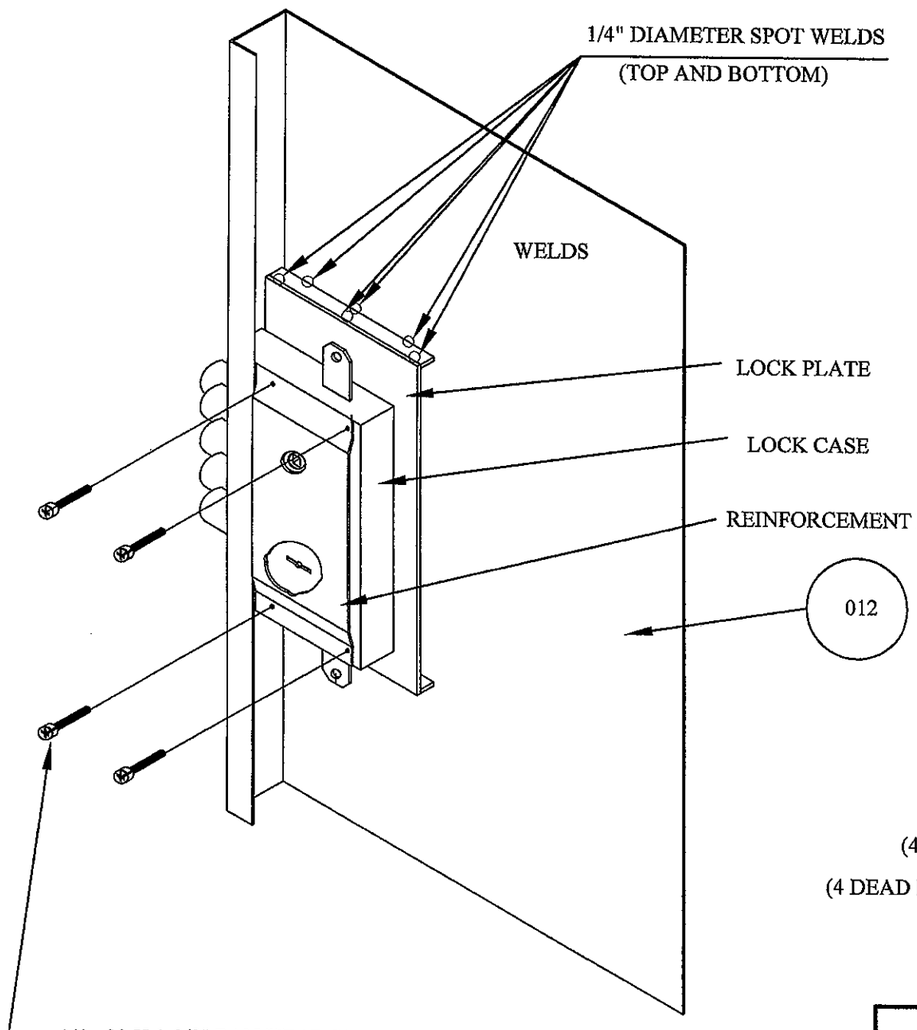

DOUBLE BIT KEY LOCK CASE

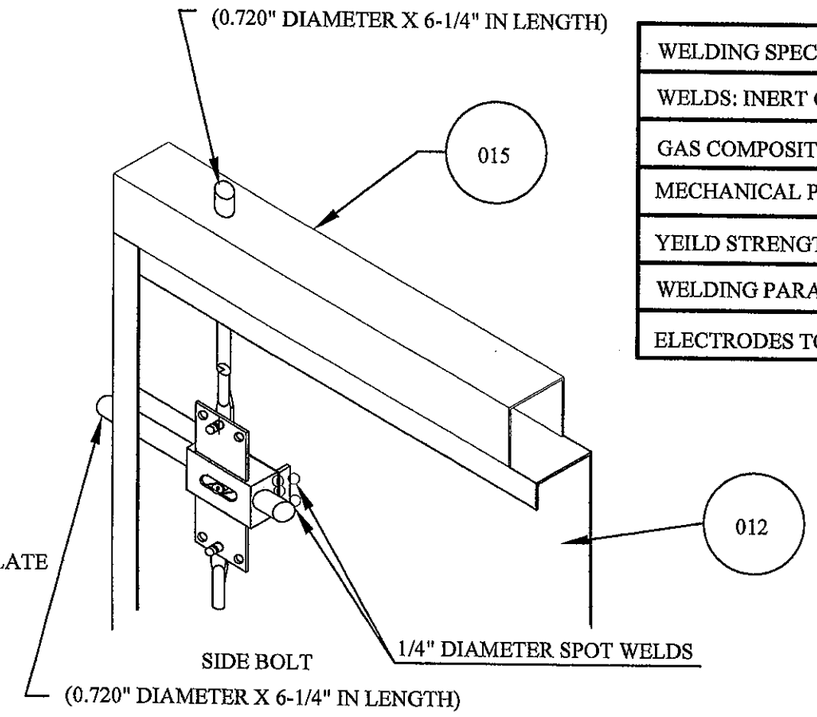

CISA LOCK
(4 POINT LOCK)
(4 DEAD BOLTS + 1 LATCH BOLT)

WELDING SPECIFICATIONS
WELDS: INERT GAS SHIELDED WELDING TOT 3 BEADINGS.
GAS COMPOSITION: ARGON + CO2
MECHANICAL PROPERTIES: TENSILE STRENGTH 72,500 P.S.I.
YEILD STRENGTH 62,500 P.S.I., ULTIMATE ELONGATION 20%.
WELDING PARAMETERS: WIRE SPEED 2"/s, TENSION 25 v, CURRENT 220A
ELECTRODES TO BE AWS A 5.18, E70XX

MIAMI DADE COUNTY

PRODUCT REVISED
as complying with the Florida
Building Code
Acceptance No 12-0319.07
Expiration Date 04/11/2013
By
Miami Dade Product Control

WALTER A. TILLIT JR. LICENSE No. 44167 STATE OF FLORIDA PROFESSIONAL ENGINEER
P.E. SEAL/SIGNATURE/DATE

TILTECO INC.
TILLIT TESTING & ENGINEERING COMPANY
6355 N.W. 36th. St., Ste. 305, VIRGINIA GARDENS, FLORIDA 33166
Phone : (305)871-1530 . Fax : (305)871-1531
e-mail: tilteco@aol.com
EB-0006719
WALTER A. TILLIT Jr. P. E.
FLORIDA Lic. # 44167

OUTSWING SINGLE STEEL DOOR

MASTER SECURITY DOORS, INC.
702 SOUTH MILITARY TRAIL
DEERFIELD BEACH, FL 33442
PH (561)499-7558 FAX (561)499-7558

REV.No	DESCRIPTION	DATE	Drawn by: MIR/F.P./A.G.
1	OLD 07-149	02/29/12	DATE: 02/29/12

PRODUCT DESCRIPTION
LOCK ATTACHMENT TO WING CASING

DRAWING No
12-055

MODEL: EX - 4
DESCRIPTION: OS DOOR

SHEET
18 OF 20

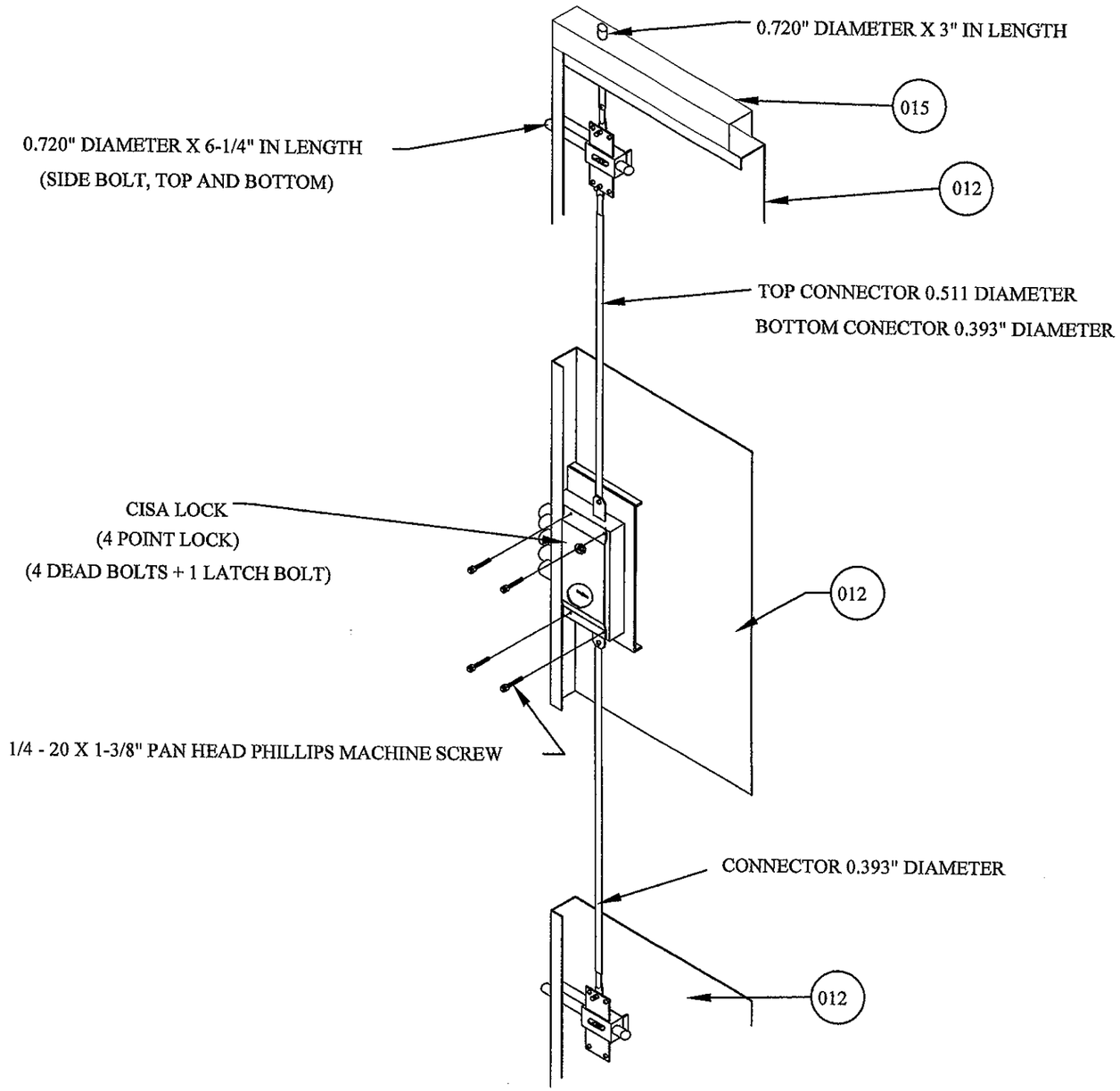

MIAMI DADE COUNTY

PRODUCT REVISED
as complying with the Florida
Building Code
Acceptance No 12-0319.07
Expiration Date 04/11/2013
By
Miami Dade Product Control

WALTER A. TILLIT JR.
LICENSE
No. 44167
STATE OF FLORIDA
PROFESSIONAL ENGINEER

P.E. SEAL/SIGNATURE/DATE

TILTECO INC.

TILLIT TESTING & ENGINEERING COMPANY
6355 N.W. 36th. St., Ste. 305, VIRGINIA GARDENS, FLORIDA 33166
Phone : (305)871-1530 . Fax : (305)871-1531
e-mail: tilteco@aol.com
EB-0006719
WALTER A. TILLIT Jr. P. E.
FLORIDA Lic. # 44167

OUTSWING SINGLE STEEL DOOR

MASTER SECURITY DOORS, INC.
702 SOUTH MILITARY TRAIL
DEERFIELD BEACH, FL 33442
PH (561)499-7558 FAX (561)499-7558

REV.No	DESCRIPTION	DATE	Drawn by: MIR/F.P./A.G.
1	OLD 07-149	02/29/12	DATE: 02/29/12

PRODUCT DESCRIPTION
LOCK ASSEMBLY

DRAWING No
12-055

MODEL: EX - 4
DESCRIPTION: OS DOOR

SHEET
19 OF 20

BILL OF MATERIALS

DESCRIPTION	DRAWING #	SHEET #	PART #
DOOR STILES	MOL-208		01
DOOR TOP AND BOTTOM RAILS	MOL-208		01
FRAME THRESHOLD	MOL-209		03
SUB-FRAME HEADER	MOL-210		04
SUB-FRAME JAMBS	MOL-210		04
FRAME JAMBS	MOL-211		05
FRAME HEADER	MOL-211		05
FRAME SILL	MOL-212		06
FIX BLOTS	MOL-213		07
DOOR CORNER KEY	MOL-214		08
DOOR MAIN WING CASING	MOL-003	11	012
VERTICAL REINFORCEMENT	MOL-003	11	013
VERTICAL REINFORCEMENT	MOL-003	11	014
TOP HORIZONTAL REINFORCEMENT	MOL-003	11	015
ROCKWOOL	MOL-003	11	
WEATHER-STRIPPING:	MOL-003		
CLOSE CELL FOAM (9/16" X 3/32")	MOL-003	12	017
COMPRESSION VINYL	MOL-003	12	018
RETENTION HOUSING	MOL-003	15	019
RETENTION CLIP	MOL-003	15	020

HARDWARE	QUANTITY	SHEET #	PART #
CISA (4) POINT LOCK	1	18, 19	INCLUDED ON MANUFACTURERS INFORMATION
5" Butt hinges	3	14, 15	HINGE TO FRAME PART # 021
			HINGE TO DOOR STILE PART # 023
			STEEL BAR PART # 024
			STEEL BAR PART # 022
			HINGE CONNECTOR PART # 025

NOTE: DRAWING FOR CISA (4) POINT LOCK AS PER MANUFACTURER'S DRAWING # 0-97-10-1853 (LATCH BOLT) O-97-10-1852 (DEAD BOLTS), 0-97-10-1850 (LOCK CASE) AND 0-97-10-1851 (LOCK CAP).

MIAMI DADE COUNTY

PRODUCT REVISED
as complying with the Florida Building Code
Acceptance No 12-0319.07
Expiration Date 04/11/2013
By
Miami Dade Product Control

WALTER A. TILLIT JR. LICENSE No. 44167 STATE OF FLORIDA PROFESSIONAL ENGINEER
3/1/12
P.E. SEAL/SIGNATURE/DATE

TILTECO INC.
TILLIT TESTING & ENGINEERING COMPANY
6355 N.W. 36th. St., Ste. 305, VIRGINIA GARDENS, FLORIDA 33166
Phone : (305)871-1530 . Fax : (305)871-1531
e-mail: tilteco@aol.com
EB-0006719
WALTER A. TILLIT Jr. P. E.
FLORIDA Lic. # 44167

OUTSWING SINGLE STEEL DOOR

MASTER SECURITY DOORS, INC.
702 SOUTH MILITARY TRAIL
DEERFIELD BEACH, FL 33442
PH (561)499-7558 FAX (561)499-7558

REV.No	DESCRIPTION	DATE	Drawn by: MIR/F.P./A.G.
1	OLD 07-149	02/29/12	DATE: 02/29/12

PRODUCT DESCRIPTION
BILL OF MATERIAL

DRAWING No
12-055

MODEL: EX - 4
DESCRIPTION: OS DOOR

SHEET
20 OF 20