MIAMI-DADE COUNTY
DEPARTMENT OF PERMITTING, ENVIRONMENT, AND REGULATORY AFFAIRS (PERA)
BOARD AND CODE ADMINISTRATION DIVISION

MIAMI-DADE COUNTY
PRODUCT CONTROL SECTION
11805 SW 26 Street, Room 208
Miami, Florida 33175-2474
T (786) 315-2590 F (786) 315-2599
www.miamidade.gov/pera

NOTICE OF ACCEPTANCE (NOA)

WinDoor, Inc.
7500 Amsterdam Drive
Orlando, FL 32832

SCOPE:

This NOA is being issued under the applicable rules and regulations governing the use of construction materials. The documentation submitted has been reviewed and accepted by Miami-Dade County PERA - Product Control Section to be used in Miami Dade County and other areas where allowed by the Authority Having Jurisdiction (AHJ).

This NOA shall not be valid after the expiration date stated below. The Miami-Dade County Product Control Section (In Miami Dade County) and/or the AHJ (in areas other than Miami Dade County) reserve the right to have this product or material tested for quality assurance purposes. If this product or material fails to perform in the accepted manner, the manufacturer will incur the expense of such testing and the AHJ may immediately revoke, modify, or suspend the use of such product or material within their jurisdiction. PERA reserves the right to revoke this acceptance, if it is determined by Miami-Dade County Product Control Section that this product or material fails to meet the requirements of the applicable building code.

This product is approved as described herein, and has been designed to comply with the Florida Building Code, including the High Velocity Hurricane Zone.

DESCRIPTION: Series "3000/4000" Aluminum Tube Mullion – L.M.I.

APPROVAL DOCUMENT: Drawing No. **FEI0009**, titled "Series 3000/4000 Impact Mullion (LMI & SMI)", sheets 1 through 12 of 12, dated 07/22/11, with revision A dated 02/14/12, prepared by PTC Product Design Group, LLC, signed and sealed by Robert James Amoruso, P.E., bearing the Miami-Dade County Product Control Revision stamp with the Notice of Acceptance number and expiration date by the Miami-Dade County Product Control Section.

MISSILE IMPACT RATING: Large and Small Missile Impact Resistant

LABELING: Each unit shall bear a permanent label with the manufacturer's name or logo, city, state, model/series, and following statement: "Miami-Dade County Product Control Approved", unless otherwise noted herein.

RENEWAL of this NOA shall be considered after a renewal application has been filed and there has been no change in the applicable building code negatively affecting the performance of this product.

TERMINATION of this NOA will occur after the expiration date or if there has been a revision or change in the materials, use, and/or manufacture of the product or process. Misuse of this NOA as an endorsement of any product, for sales, advertising or any other purposes shall automatically terminate this NOA. Failure to comply with any section of this NOA shall be cause for termination and removal of NOA.

ADVERTISEMENT: The NOA number preceded by the words Miami-Dade County, Florida, and followed by the expiration date may be displayed in advertising literature. If any portion of the NOA is displayed, then it shall be done in its entirety.

INSPECTION: A copy of this entire NOA shall be provided to the user by the manufacturer or its distributors and shall be available for inspection at the job site at the request of the Building Official.

This NOA **revises NOA # 11-0815.10** and consists of this page 1 and evidence page E-1, as well as approval document mentioned above.

The submitted documentation was reviewed by **Manuel Perez, P.E.**

MIAMI-DADE COUNTY APPROVED

5/23/12

NOTICE OF ACCEPTANCE: EVIDENCE SUBMITTED

A. DRAWINGS

1. Manufacturer's die drawings and sections.
2. Drawing No **FEI0009**, Sheets 1 through 12 of 12, titled "Series 3000/4000 Impact Mullion (LMI & SMI)", dated 07/22/11, with revision A dated 02/14/12, prepared by PTC Product Design Group, LLC, signed and sealed by Robert James Amoruso, P.E.

B. TESTS

1. Test reports on: 1) Air Infiltration Test, per FBC, TAS 202-94
   2) Uniform Static Air Pressure Test, Loading per FBC TAS 202-94
   3) Water Resistance Test, per FBC, TAS 202-94
   4) Small Missile Impact Test per FBC, TAS 201-94
   5) Large Missile Impact Test per FBC, TAS 201-94
   6) Cyclic Wind Pressure Loading per FBC, TAS 203-94
   7) Forced Entry Test, per FBC 2411 3.2.1, TAS 202-94

   along with marked-up drawings and installation diagram of series 5000 aluminum single hung windows mulled together, prepared by National Certified Testing Laboratories, Test Report No. **NCTL-210-3567-3**, specimens: **#1-(TSH-7), #2-(TSH-8), #3-(SH-7), #4-(SH-8),** dated 12/18/08, signed and sealed by Gerard John Ferrara, P.E. ***(Submitted under previous NOA #09-0610.12)***

C. CALCULATIONS:

1. Anchor verification calculations and structural analysis, complying with FBC-2007, dated 5/19/09, prepared by PTC, LLC, signed and sealed by Robert James Amoruso, P.E. ***(Submitted under previous NOA#11-0815.10)***
2. Glazing complies with ASTM E1300-04

D. QUALITY ASSURANCE

1. Miami-Dade Department of Permitting, Environment, and Regulatory Affairs (PERA)

E. MATERIAL CERTIFICATIONS

1. None.

F. STATEMENTS

1. Statement letter of conformance, complying with FBC-2007 and FBC-2010, and no financial interest, dated March 13, 2012, signed and sealed by Robert James Amoruso, P.E.
2. Laboratory compliance letter for Test Report No. **NCTL-210-3567-3**, issued by National Certified Testing Laboratories, dated March 4, 2009, signed and sealed by Gerard J. Ferrara, P.E. ***(Submitted under previous NOA #09-0610.12)***

G. OTHERS

1. Notice of Acceptance No. **11-0815.10**, issued to WinDoor, Inc. for their Series "3000/4000" Aluminum Tube Mullion – L.M.I., approved on 09/29/11 and expiring on 10/14/14.

Manuel Perez, P.E.
Product Control Examiner
NOA No. 12-0320.14
Expiration Date: October 14, 2014
Approval Date: May 31, 2012

WINDOOR, Inc.

IMPACT Mullion for SH & Fixed Window, LMI & SMI

INSTALLATION ANCHORAGE DETAILS

GENERAL NOTES: (ALL DRAWING SHEETS)

1. WINDOOR'S WINDOW CONFIGURATIONS FOR USE WITH THE WINDOOR MULLION SHOWN ON SHEET 3, ITEM 1 ARE SHOWN ON SHEET 2 ELEVATIONS. WINDOOR'S WINDOWS APPROVED UNDER SEPARATE NOAS.

2. THESE MULLION SYSTEMS HAVE BEEN TESTED (TEST REPORT NO. NCTL-210-3744-3), ANALYZED AND APPROVED FOR DESIGN PRESSURES NOT TO EXCEED THOSE SHOWN ON THESE DRAWINGS.

3. BLOCK AND FRAME OPENINGS MUST BE DESIGNED & CONSTRUCTED TO WITHSTAND WIND LOADS TRANSFERRED BY THE MULLIONS & SUPPORTED WINDOWS. 1X AND 2X BUCKS SHOWN SHALL BE DESIGNED AND ANCHORED TO PROPERLY TRANSFER ALL LOADS TO THE STRUCTURE AND ARE THE RESPONSIBILITY OF THE ARCHITECT OR ENGINEER OF RECORD AS REQUIRED BY WINDOOR'S MIAMI DADE APPROVED NOA WINDOW INSTALLATION.

4. ALL HARDWARE & FASTENERS SHALL BE IN ACCORDANCE WITH THESE DRAWINGS & MAY NOT VARY UNLESS SPECIFICALLY APPROVED BY THE ARCHITECT OR ENGINEER OF RECORD UNDER SEPARATE ENGINEERING EVALUATION.

5. THESE MULLION SYSTEMS HAVE BEEN DESIGNED IN ACCORDANCE WITH THE 2007 AND 2010 FLORIDA BUILDING CODE (FBC) INCLUDING THE WIND BORNE DEBRIS REGION (WBDR) AND THE HIGH VELOCITY HURRICANE ZONE (HVHZ).

6. THE MULLION PRODUCT HAS BEEN TESTED IN ACCORDANCE WITH DADE COUNTY PROTOCOLS TAS-201, TAS-202 & TAS-203 FOR LARGE AND SMALL MISSILE IMPACT & CYCLE TESTING AND AIR, WATER & STRUCTURAL TESTING.

7. ALL PRODUCTS TO BE USED WITH THESE MULLIONS MUST BE WINDOOR'S SERIES 4000 ALUMINUM SINGLE HUNG OR SERIES 3000 FIXED WINDOWS MANUFACTURED BY WINDOOR AND HOLDING A MIAMI DADE APPROVED NOTICE OF ACCEPTANCE (NOA).

8. ALLOWABLE PRESSURE ON THE MULLED UNIT ASSEMBLY SHALL BE CONTROLLED BY THE LESSER ALLOWABLE PRESSURE OF THE MULLION OR THE INDIVIDUAL WINDOW UNIT.

9. FOR WINDOW FRAME TO OPENING ATTACHMENT AND MULLION ATTACHMENT, SEE THE RESPECTIVE PRODUCT APPROVAL DRAWINGS FOR THE WINDOW.

10. MULLION LENGTHS, TRIBUTARY LOAD AND DESIGN PRESSURE ARE RESTRICTED BY THOSE SHOWN ON THE TABLES.

11. THE LOADS IN THESE TABLES CONSIDER WORST CASE OF MULLION STRESS, DEFLECTION AND END LOAD REACTION.

12. ANY CONDITIONS NOT COVERED IN THIS APPROVAL SHALL BE SUBJECT TO SEPARATE ENGINEERING EVALUATION TO BE REVIEWED BY BUILDING OFFICIAL.

13. ALL MULLIONS AND CLIPS SHALL BE 6063-T6 ALUMINUM.

14. MATERIALS, INCLUDING BUT NOT LIMITED TO STEEL SCREWS, THAT COME INTO CONTACT WITH OTHER DISSIMILAR MATERIALS SHALL MEET THE REQUIREMENTS OF 2007 AND 2010 FLORIDA BUILDING CODE SECTION 2003.8.4.

TABLE OF CONTENTS

SHEET	REV.	SHEET DESCRIPTION
1	---	GENERAL AND INSTALLATION NOTES
2	---	MULLION ELEVATIONS
3	---	BILL OF MATERIALS & COMPONENTS
4	---	VERTICAL SECTIONS
5	---	VERTICAL SECTIONS
6	---	VERTICAL SECTIONS
7	---	HORIZONTAL SECTIONS
8	---	ANCHOR SCHEDULE
9	---	DESIGN PRESSURE TABLES
10	---	DESIGN PRESSURE TABLES
11	---	DESIGN PRESSURE TABLES
12	---	DESIGN PRESSURE TABLES

INSTALLATION NOTES:

1. THE NUMBER OF INSTALLATION ANCHORS DEPICTED IS THE MINIMUM NUMBER OF ANCHORS TO BE USED FOR MULLION INSTALLATION.

2. FOR INSTALLATION INTO CONCRETE & MASONRY SUBSTRATE, USE 3/16" DIAMETER CONCRETE SCREWS OF SUFFICIENT LENGTH TO ACHIEVE 1 1/4" EMBEDMENT INTO UNGROUTED CMU AND 1 3/4" EMBEDMENT INTO CONCRETE AND GROUTED CMU.

3. FOR INSTALLATION INTO WOOD FRAMING, USE #10 WOOD SCREWS OR TAPPING SCREWS (TYPE AB) OF SUFFICIENT LENGTH TO ACHIEVE 1 1/2" MINIMUM EMBEDMENT.

4. MINIMUM EMBEDMENT AND EDGE DISTANCE EXCLUDE WALL FINISHES (INCLUDING BUT NOT LIMITED TO STUCCO, FOAM, BRICK VENEER, AND SIDING).

5. INSTALLATION ANCHORS AND ASSOCIATED HARDWARE MUST BE MADE OF CORROSION RESISTANT MATERIAL OR HAVE A CORROSION RESISTANT COATING.

6. INSTALLATION ANCHORS SHALL BE INSTALLED IN ACCORDANCE WITH ANCHOR MANUFACTURER'S INSTALLATION INSTRUCTIONS, AND ANCHORS SHALL NOT BE USED IN SUBSTRATES WITH STRENGTHS LESS THAN THE MINIMUM STRENGTH SPECIFIED BY THE ANCHOR MANUFACTURER IN NOTE 7 BELOW.

7. INSTALLATION ANCHOR CAPACITIES FOR PRODUCTS HEREIN ARE BASED ON SUBSTRATE MATERIALS WITH THE FOLLOWING PROPERTIES:
   A. WOOD PT SOUTHERN YELLOW PINE - MINIMUM SPECIFIC GRAVITY IS 0.55. LUMBER MUST COMPLY WITH FBC SECTIONS 2411.3.3.3 AND 2326.2 AS TO WOOD PROTECTION.
   B. CONCRETE= 3000 PSI MIN., CMU PER ASTM C90., GROUT-FILLED CMU = 2000 psi 2007 AND 2010 FBC, SECTIONS 2105.2.2.1.2 & R609.1.4).

PRODUCT REVISED
as complying with the Florida Building Code
Acceptance No 12-0320.14
Expiration Date OCT. 14, 2014
By Manuel Perez
Miami/Dade Product Control

REVISIONS

SHEET	REV	DESCRIPTION	DATE	BY
.	0	ORIGINAL ISSUE	07/22/11	RJA
.	A	UPDATE TO 2010 FBC	02/14/12	JBH

This drawing and all associated component files are the sole property of WinDoor, Inc. and contains confidential, privileged and patented information. Any reproduction of this drawing is not permitted without written approval from WinDoor, Inc. management.

Robert J. Amoruso, P.E.
FL License No. 49752

ROBERT JAMES AMORUSO LICENSE No 49752 STATE OF FLORIDA PROFESSIONAL ENGINEER
3/13/12

PTC Product Design Group, LLC
PO Box 520775
Longwood, FL 32752-0775
321-690-1788 (P) 321-690-1789 (F)
FBPE Cert. of Auth. No. 25935

WINDOOR INCORPORATED
7500 AMSTERDAM DRIVE
ORLANDO, FL 32832
Phone: 407.481.8400
Fax: 407.481.0505
www.windoorinc.com

DRAWING TITLE:
SERIES 3000/4000 IMPACT MULLION (LMI & SMI)
GENERAL AND INSTALLATION NOTES

SIZE	DRAWN BY:	DWG NO.	REV
.	JBH	FEI0009	A
SCALE NTS	DATE: 07/22/11	SHEET 1OF12	

EQUAL LEG FRAME ELEVATIONS

SEE SHEET 4, VERTICAL SECTIONS & SHEET 7, HORIZONTAL SECTIONS

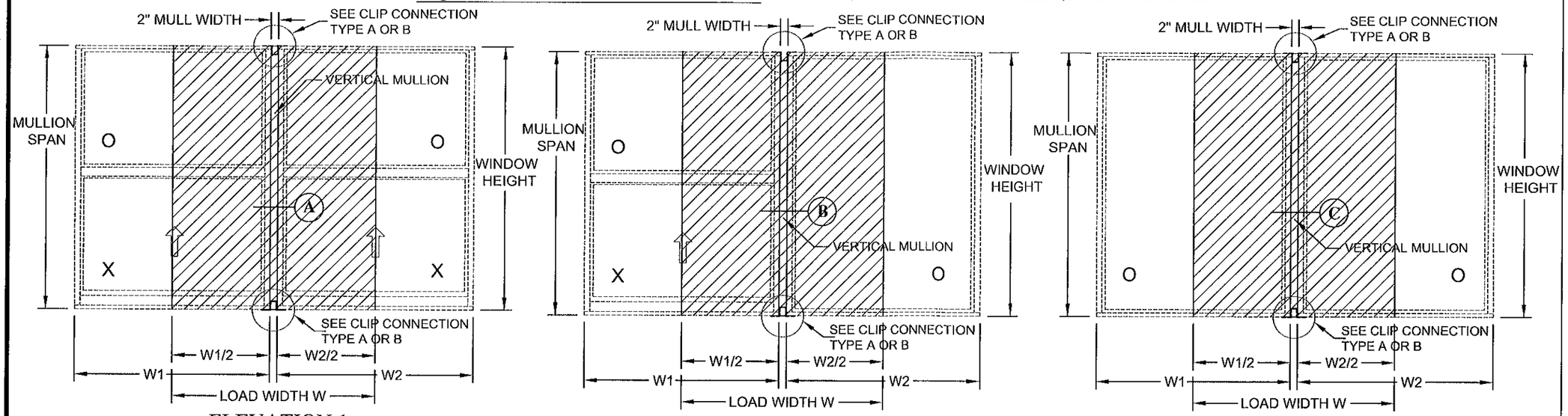

ELEVATION 1 ELEVATION 2 ELEVATION 3

FLANGE FRAME ELEVATIONS

SEE SHEET 5 & 6, VERTICAL SECTIONS & SHEET 7, HORIZONTAL SECTIONS

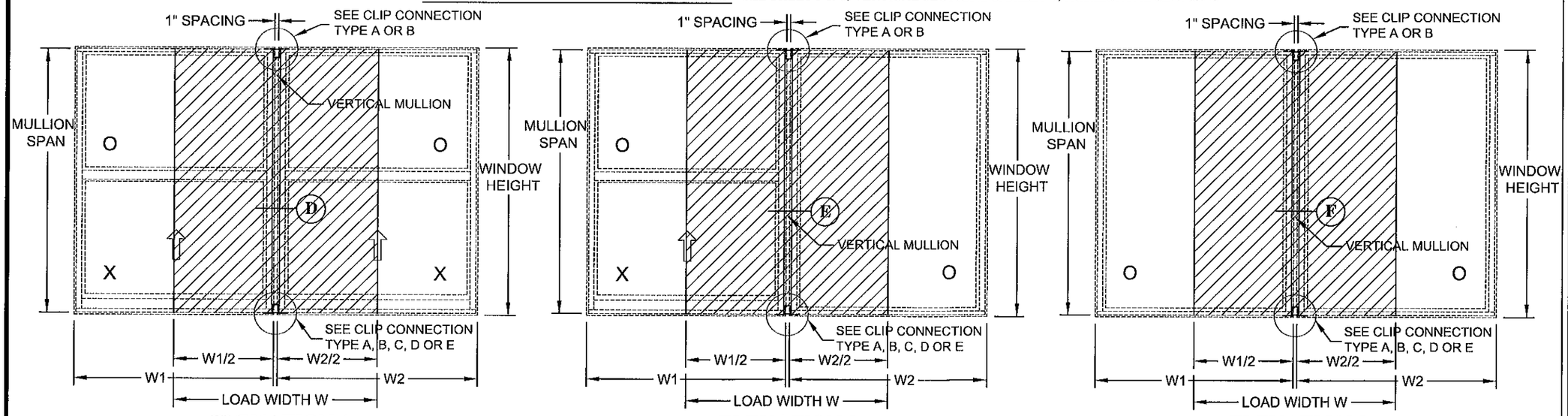

ELEVATION 1 ELEVATION 2 ELEVATION 3

SERIES 4000 SINGLE HUNG AND 3000 FIXED WINDOWS		
MAXIMUM DIMENSIONS	EQUAL LEG FRAME	FLANGE FRAME
W1	53"	54"
W2	53"	54"
WINDOW HEIGHT	72"	73"
MULLION SPAN	72"	72"

AVERAGE LOAD WIDTH - EQUAL LEG; W = (W1 + W2) / 2 + 2"
- FLANGE; W = (W1+W2) / 2 + 1"

NOTES:

1- ELEVATIONS ARE VIEWED FROM EXTERIOR.
2- SCREENS ARE NOT SHOWN FOR CLARITY.
3- ALL DIMENSIONS ARE IN INCHES.
4- ALL MULLIONS SHALL BE 6063-T6 ALUMINUM.
5- W: AVERAGE LOAD WIDTH
6- MULLION SPAN IS THE SAME AS WINDOW HEIGHT FOR THE EQUAL LEG FRAME AND IS 1" SHORTER FOR THE FLANGE FRAME.

PRODUCT REVISED
as complying with the Florida Building Code
Acceptance No 12-0320.14
Expiration Date Oct. 14, 2014
By Manuel Perez
Miami-Dade Product Control

REVISIONS

SHEET	REV	DESCRIPTION	DATE	BY
.	0	ORIGINAL ISSUE	07/22/11	RJA
.	A	UPDATE TO 2010 FBC	02/14/12	JBH

This drawing and all associated component files are the sole property of WinDoor, Inc. and contains confidential, privileged and patented information. Any reproduction of this drawing is not permitted without written approval from WinDoor, Inc. management.

Robert J. Amoruso, P.E.
FL License No. 49752

ROBERT JAMES AMORUSO LICENSE No 49752 STATE OF FLORIDA PROFESSIONAL ENGINEER
5/13/12

PTC Product Design Group, LLC
PO Box 520775
Longwood, FL 32752-0775
321-690-1788 (P) 321-690-1789 (F)
FBPE Cert. of Auth. No. 25935

WINDOOR INCORPORATED
7500 AMSTERDAM DRIVE
ORLANDO, FL 32832
Phone: 407.481.8400
Fax: 407.481.0505
www.windoorinc.com

DRAWING TITLE:
SERIES 3000 /4000 IMPACT MULLION (LMI & SMI)
ELEVATION DETAILS

SIZE	DRAWN BY:	DWG NO.	REV
.	JBH	FEI0009	A
SCALE NTS	DATE: 07/22/11	SHEET 2OF12	

① TUBE MULLION 2 X 4
PART No. FE5717

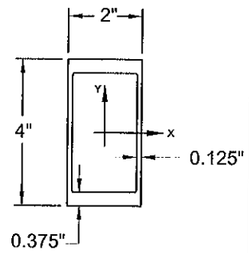

SECTION PROPERTIES:

AREA: 2.316 in²
Ix : 5.669 in4
SX: 2.835 in³

② EXT MULLION CLIP
PART No. FE5708-1

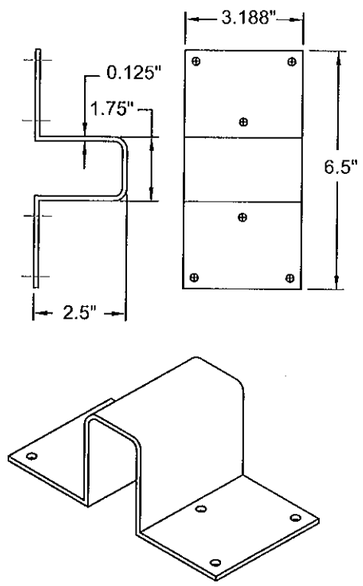

③ SILL MULLION CLIP
PART No. FE5708-2

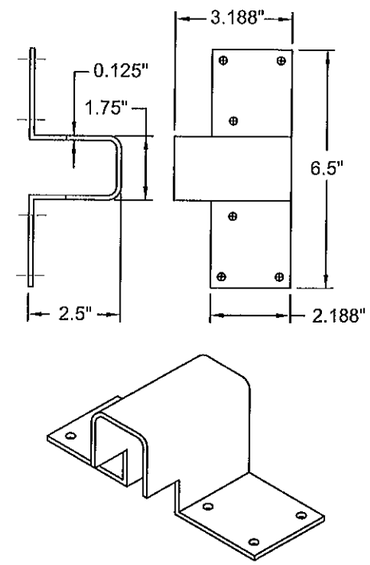

④ EXT MULLION CLIP
PART No. FE5708-4

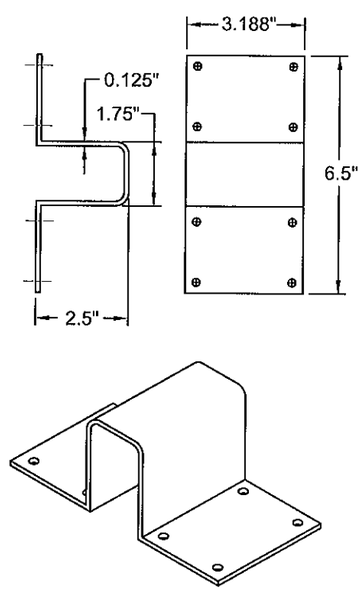

⑤ SILL MULLION CLIP
PART No. FE5708-5

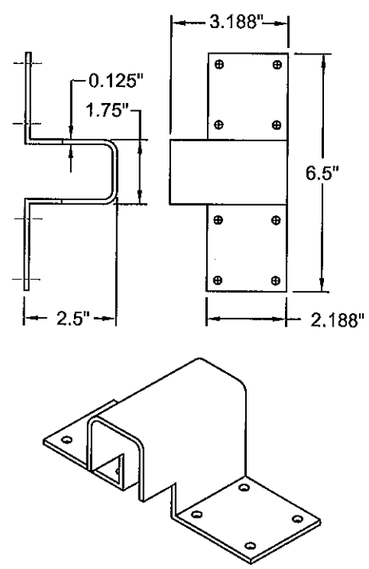

BILL OF MATERIALS

ITEM #	PART DESCRIPTION	PART # OR DWG NO.	MATERIAL
1	TUBE MULLION 2 x 4	FE 5717	ALUM. EXTRUSION (6063-T6)
2	EXT MULLION CLIP (6 Anchor Holes)	FE 5708-1	ALUM. EXTRUSION (6063-T6)
3	SILL MULLION CLIP (6 Anchor Holes)	FE 5708-2	ALUM. EXTRUSION (6063-T6)
4	EXT MULLION CLIP (8 Anchor Holes)	FE 5708-4	ALUM. EXTRUSION (6063-T6)
5	SILL MULLION CLIP (8 Anchor Holes)	FE 5708-5	ALUM. EXTRUSION (6063-T6)

REVISIONS

SHEET	REV	DESCRIPTION	DATE	BY
.	0	ORIGINAL ISSUE	07/22/11	RJA
.	A	UPDATE TO 2010 FBC	02/14/12	JBH

This drawing and all associated component files are the sole property of WinDoor, Inc. and contains confidential, privileged and patented information. Any reproduction of this drawing is not permitted without written approval from WinDoor, Inc., management.

PRODUCT REVISED
as complying with the Florida
Building Code
Acceptance No 12-0320.14
Expiration Date Oct. 14, 2014
By Manuel Perez
Miami-Dade Product Control

Robert J. Amoruso, P.E.
FL License No. 49752

ROBERT JAMES AMORUSO
LICENSE
No 49752
3/13/12
STATE OF
FLORIDA
PROFESSIONAL ENGINEER

PTC Product Design Group, LLC
PO Box 520775
Longwood, FL 32752-0775
321-690-1788 (P) 321-690-1789 (F)
FBPE Cert. of Auth. No. 25935

NOTE:
ALL DIMENSIONS ARE IN INCHES.

WINDOOR INCORPORATED
7500 AMSTERDAM DRIVE
ORLANDO, FL 32832
Phone: 407.481.8400
Fax: 407.481.0505
www.windoorinc.com

DRAWING TITLE:
SERIES 3000/ 4000 IMPACT MULLION (LMI & SMI)
BILL OF MATERIAL AND COMPONENTS

SIZE	DRAWN BY:	DWG NO.	REV
	JBH	FEI0009	A
SCALE NTS	DATE: 07/22/11	SHEET 3OF12	

EQUAL LEG FRAME VERTICAL SECTIONS

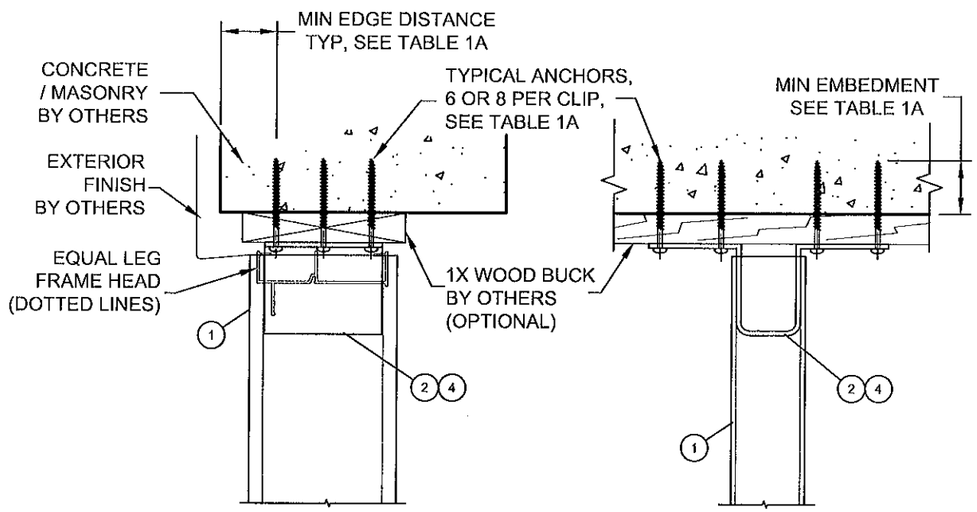

SIDE VIEW **FRONT VIEW**

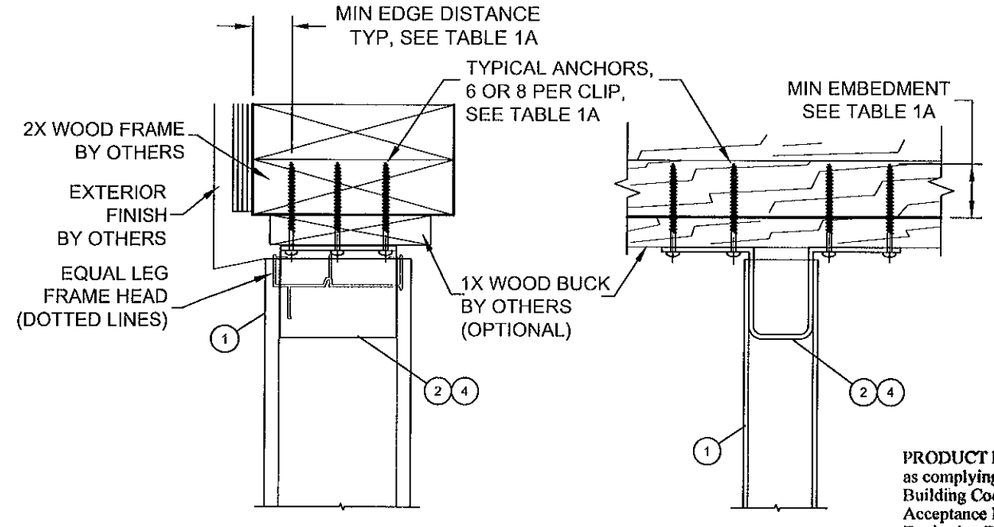

SIDE VIEW **FRONT VIEW**

PRODUCT REVISED
as complying with the Florida
Building Code
Acceptance No 12-0320.14
Expiration Date Oct. 14, 2014
By Manuel Perez
Miami Dade Product Control

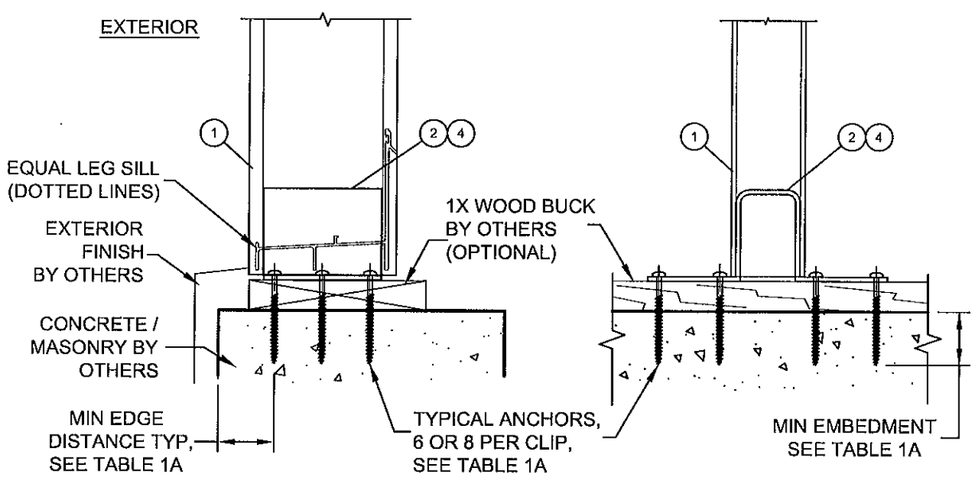

ANCHOR TYPE 'A' (HEAD & SILL)

MULLION CLIP ANCHORS THRU WOOD BUCKS
INTO CONCRETE / MASONRY SUBSTRATE FOR
EQUAL LEG FRAME (6 ANCHOR CLIP SHOWN)

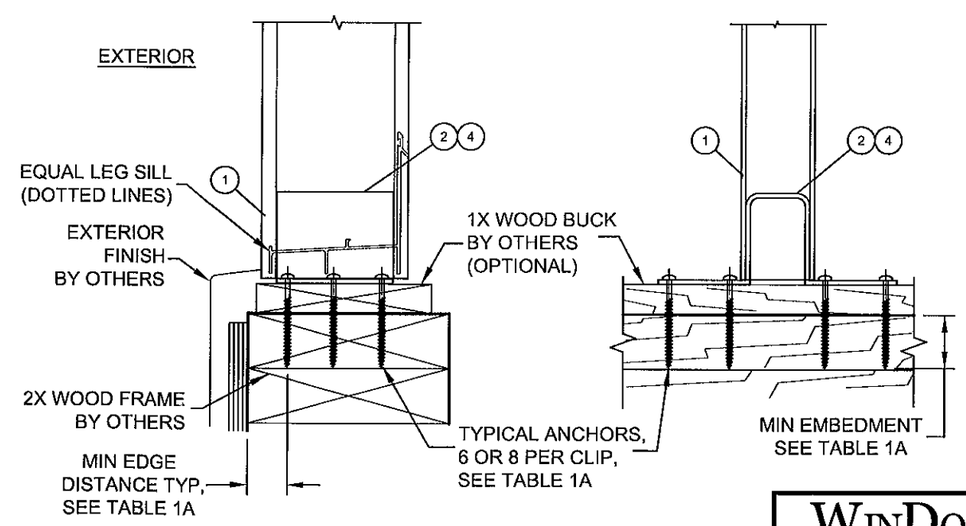

ANCHOR TYPE 'B' (HEAD & SILL)

MULLION CLIP ANCHORS THRU WOOD BUCKS
INTO WOOD FRAME SUBSTRATE FOR EQUAL
LEG FRAME (6 ANCHOR CLIP SHOWN)

REVISIONS

SHEET	REV	DESCRIPTION	DATE	BY
.	0	ORIGINAL ISSUE	07/22/11	RJA
.	A	UPDATE TO 2010 FBC	02/14/12	JBH

This drawing and all associated component files are the sole property of WinDoor, Inc. and contains confidential, privileged and patented information. Any reproduction of this drawing is not permitted without written approval from WinDoor, Inc. management.

Robert J. Amoruso, P.E.
FL License No. 49752

ROBERT JAMES AMORUSO
LICENSE
No 49752
3/13/12
STATE OF
FLORIDA
PROFESSIONAL ENGINEER

PTC Product Design Group, LLC
PO Box 520775
Longwood, FL 32752-0775
321-690-1788 (P) 321-690-1789 (F)
FBPE Cert. of Auth. No. 25935

WINDOOR INCORPORATED
7500 AMSTERDAM DRIVE
ORLANDO, FL 32832
Phone: 407.481.8400
Fax: 407.481.0505
www.windoorinc.com

DRAWING TITLE:
SERIES 3000/ 4000 IMPACT MULLION (LMI & SMI)
EQUAL LEG VERTICAL SECTIONS

SIZE	DRAWN BY:	DWG NO.	REV
.	JBH	FEI0009	A
SCALE NTS	DATE: 07/22/11	SHEET 4OF12	

FLANGE FRAME VERTICAL SECTIONS

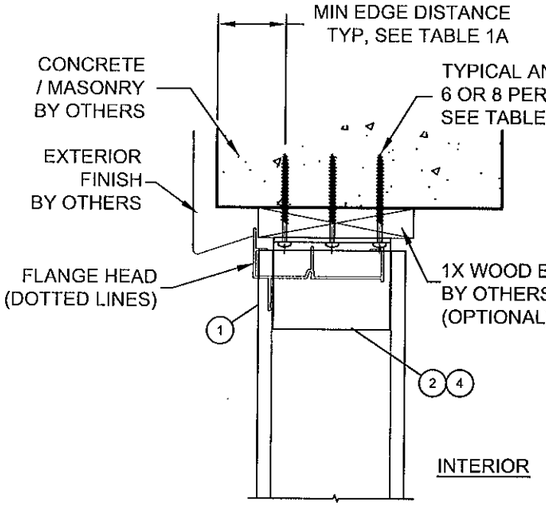

SIDE VIEW

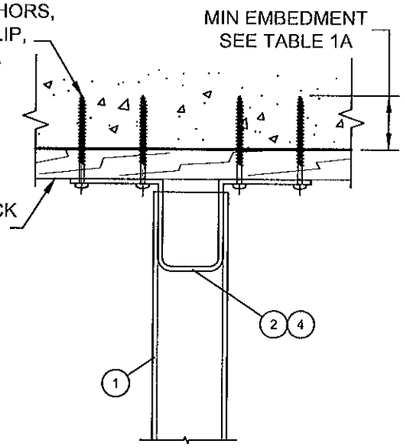

FRONT VIEW

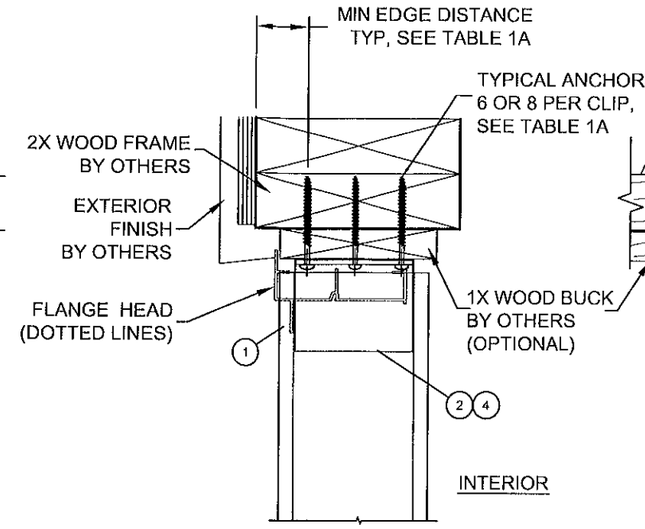

SIDE VIEW

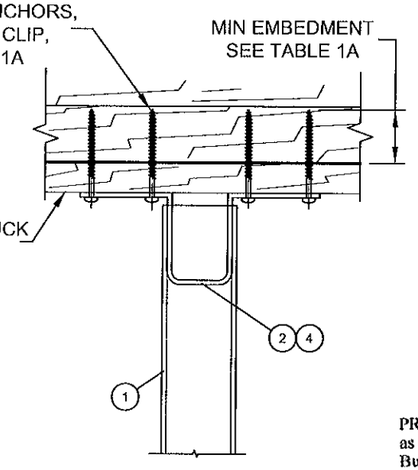

FRONT VIEW

PRODUCT REVISED
as complying with the Florida
Building Code
Acceptance No 12-0320.14
Expiration Date Oct. 14, 2014
By Manuel Perez
Miami Dade Product Control

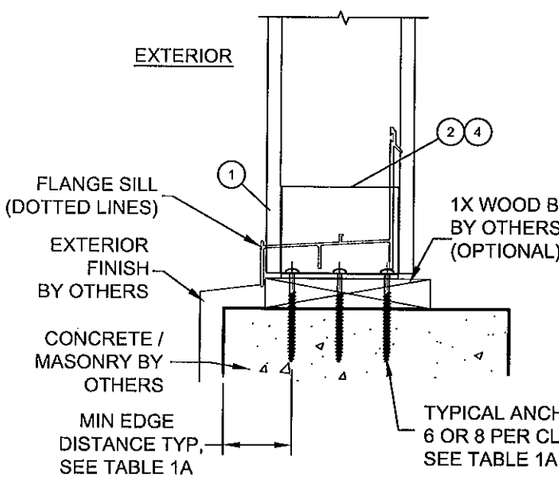

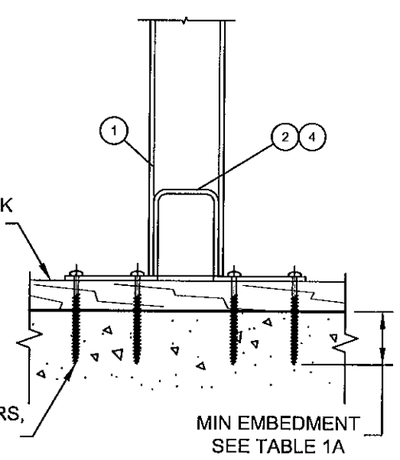

ANCHOR TYPE 'A' (HEAD & SILL)

MULLION CLIP ANCHORS THRU WOOD BUCKS INTO CONCRETE / MASONRY SUBSTRATE FOR FLANGE FRAME (6 ANCHOR CLIP SHOWN)

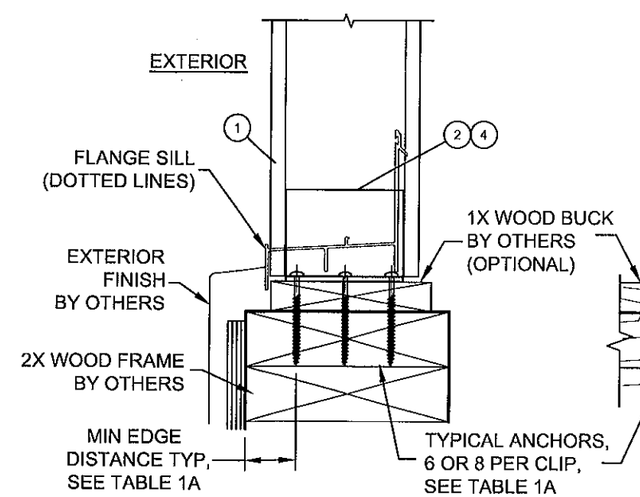

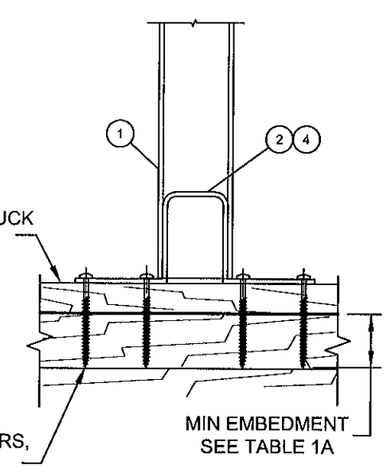

ANCHOR TYPE 'B' (HEAD & SILL)

MULLION CLIP ANCHORS THRU WOOD BUCKS INTO WOOD FRAME SUBSTRATE FOR FLANGE FRAME (6 ANCHOR CLIP SHOWN)

REVISIONS			
SHEET	REV	DESCRIPTION	DATE	BY
.	0	ORIGINAL ISSUE	07/22/11	RJA
.	A	UPDATE TO 2010 FBC	02/14/12	JBH

This drawing and all associated component files are the sole property of WinDoor, Inc. and contains confidential, privileged and patented information. Any reproduction of this drawing is not permitted without written approval from WinDoor, Inc. management.

Robert J. Amoruso, P.E.
FL License No. 49752

ROBERT JAMES AMORUSO
LICENSE
No 49752
3/13/12
STATE OF
FLORIDA
PROFESSIONAL ENGINEER

PTC Product Design Group, LLC
PO Box 520775
Longwood, FL 32752-0775
321-690-1788 (P) 321-690-1789 (F)
FBPE Cert. of Auth. No. 25935

WINDOOR INCORPORATED
7500 AMSTERDAM DRIVE
ORLANDO, FL 32832
Phone: 407.481.8400
Fax: 407.481.0505
www.windoorinc.com

DRAWING TITLE:
SERIES 3000/ 4000 IMPACT MULLION (LMI & SMI)
FLANGE VERTICAL SECTIONS

SIZE	DRAWN BY:	DWG NO.	REV
.	JBH	FEI0009	A
SCALE NTS	DATE: 07/22/11	SHEET 5OF12	

FLANGE FRAME VERTICAL SECTIONS

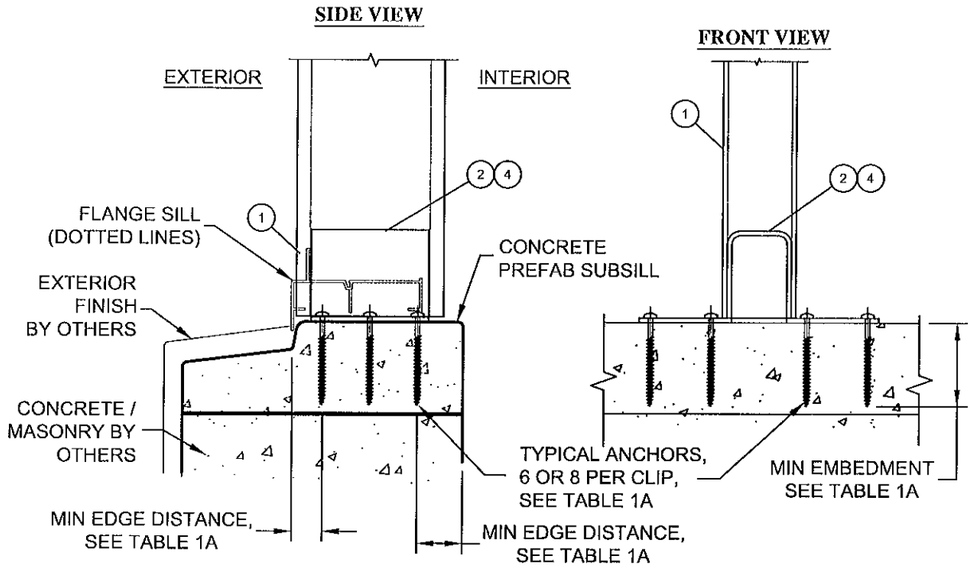

ANCHOR TYPE 'C' (SILL)

MULLION CLIP ANCHORS INTO PREFAB CONCRETE SUBSILL FOR FLANGE FRAME (6 ANCHOR CLIP SHOWN)

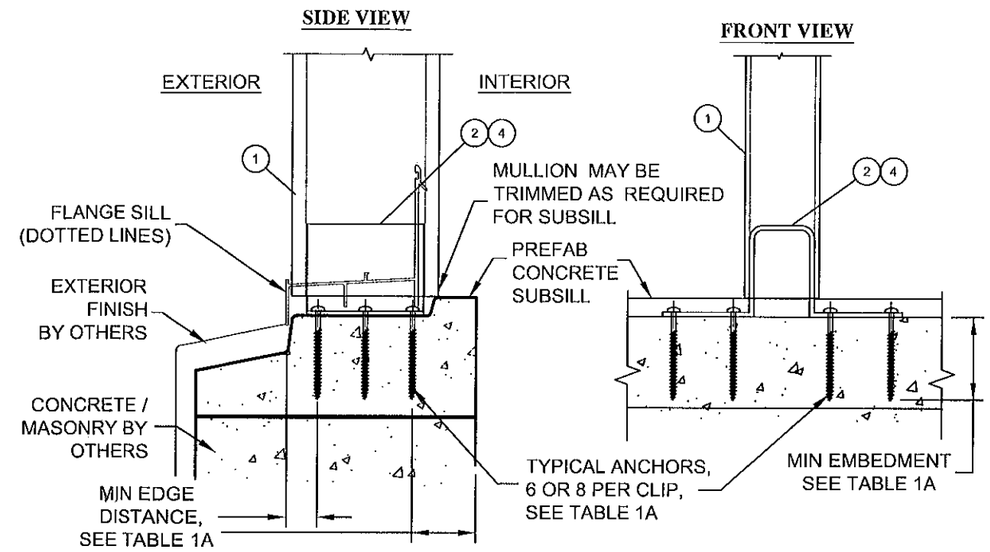

ANCHOR TYPE 'D' (SILL)

MULLION CLIP ANCHORS INTO PREFAB CONCRETE SUBSILL FOR FLANGE FRAME (6 ANCHOR CLIP SHOWN)

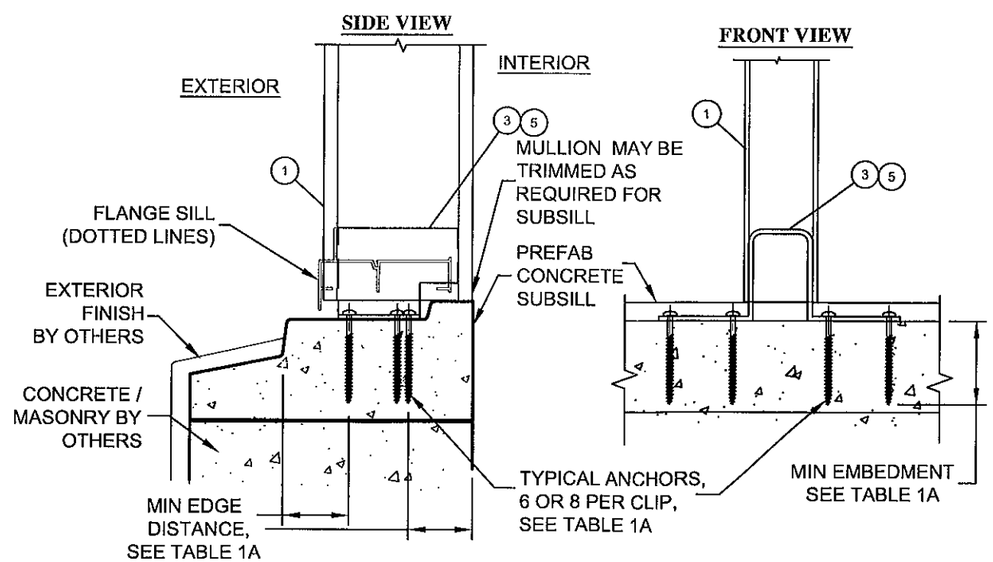

ANCHOR TYPE 'E' (SILL)

MULLION CLIP ANCHORS INTO PREFAB CONCRETE SUBSILL FOR FLANGE FRAME (6 ANCHOR CLIP SHOWN)

REVISIONS

SHEET	REV	DESCRIPTION	DATE	BY
.	0	ORIGINAL ISSUE	07/22/11	RJA
.	A	UPDATE TO 2010 FBC	02/14/12	JBH

This drawing and all associated component files are the sole property of WinDoor, Inc. and contains confidential, privileged and patented information. Any reproduction of this drawing is not permitted without written approval from WinDoor, Inc. management.

PRODUCT REVISED
as complying with the Florida Building Code
Acceptance No 12-0320.14
Expiration Date 02.14.2014
By Manuel Perez
Miami Dade Product Control

Robert J. Amoruso, P.E.
FL License No. 49752

ROBERT JAMES AMORUSO LICENSE No 49752 STATE OF FLORIDA PROFESSIONAL ENGINEER 3/13/12

PTC Product Design Group, LLC
PO Box 520775
Longwood, FL 32752-0775
321-690-1788 (P) 321-690-1789 (F)
FBPE Cert. of Auth. No. 25935

WINDOOR INCORPORATED
7500 AMSTERDAM DRIVE
ORLANDO, FL 32832
Phone: 407.481.8400
Fax: 407.481.0505
www.windoorinc.com

DRAWING TITLE:
SERIES 3000/ 4000 IMPACT MULLION (LMI & SMI)
FLANGE VERTICAL SECTIONS

SIZE	DRAWN BY:	DWG NO.	REV
.	JBH	FEI0009	A
SCALE NTS	DATE: 07/22/11	SHEET 6OF12	

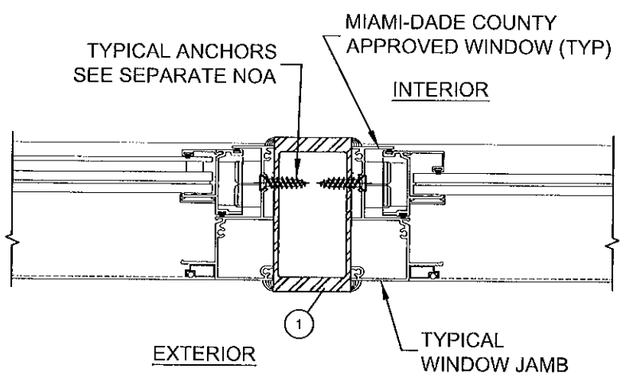

A HORIZONTAL SECTION
2x4 ALUMINUM TUBE MULLION
WITH EQUAL LEG FRAME
(SINGLE HUNG / SINGLE HUNG)

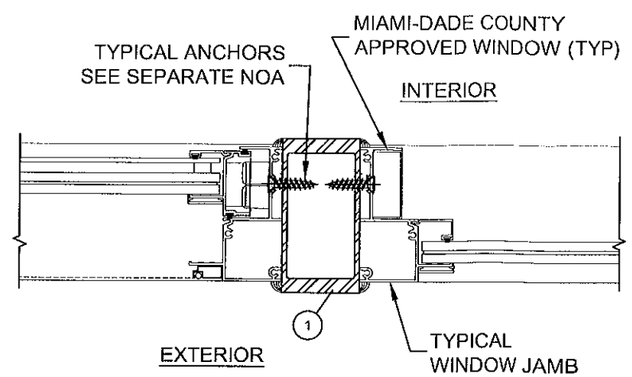

B HORIZONTAL SECTION
2x4 ALUMINUM TUBE MULLION
WITH EQUAL LEG FRAME
(SINGLE HUNG / FIXED)

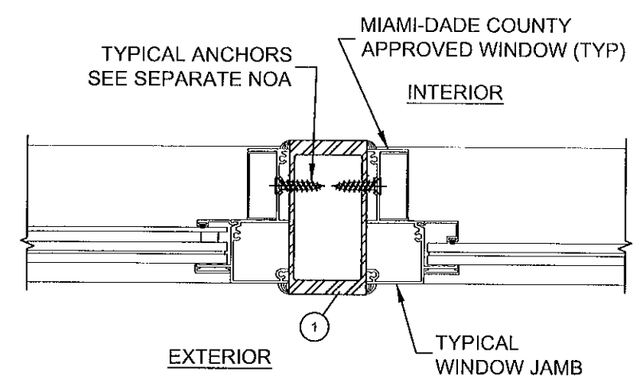

C HORIZONTAL SECTION
2x4 ALUMINUM TUBE MULLION
WITH EQUAL LEG FRAME
(FIXED / FIXED)

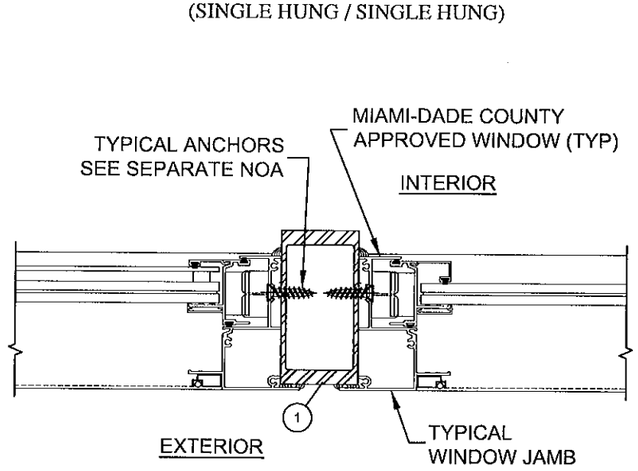

D HORIZONTAL SECTION
2x4 ALUMINUM TUBE MULLION
WITH FLANGE FRAME
(SINGLE HUNG / SINGLE HUNG)

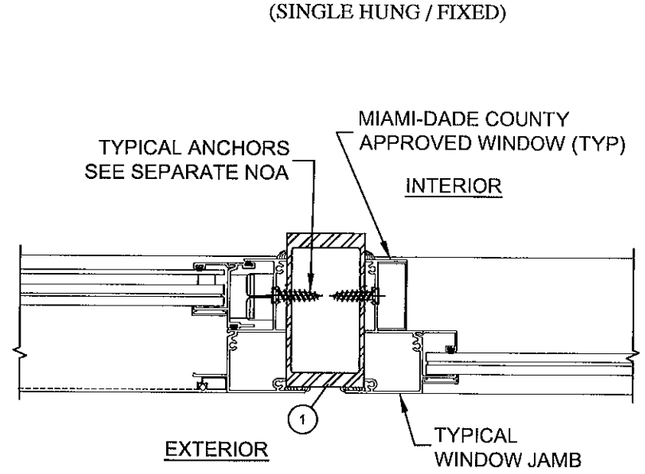

E HORIZONTAL SECTION
2x4 ALUMINUM TUBE MULLION
WITH FLANGE FRAME
(SINGLE HUNG / FIXED)

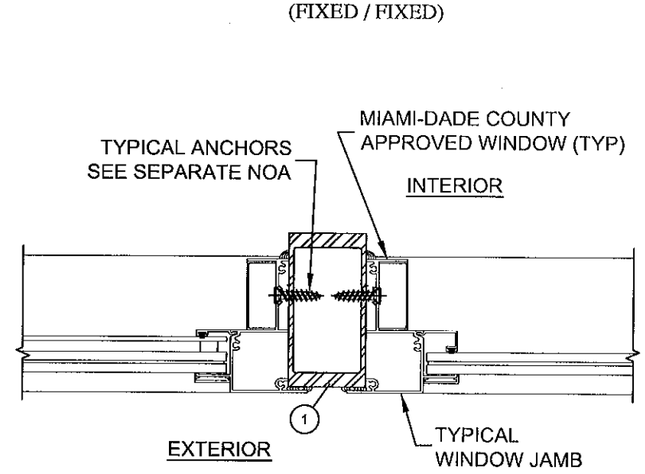

F HORIZONTAL SECTION
2x4 ALUMINUM TUBE MULLION
WITH FLANGE FRAME
(FIXED / FIXED)

REVISIONS

SHEET	REV	DESCRIPTION	DATE	BY
.	0	ORIGINAL ISSUE	07/22/11	RJA
.	A	UPDATE TO 2010 FBC	02/14/12	JBH

This drawing and all associated component files are the sole property of WinDoor, Inc. and contains confidential, privileged and patented information.
Any reproduction of this drawing is not permitted without written approval from WinDoor, Inc. management.

Robert J. Amoruso, P.E.
FL License No. 49752

ROBERT JAMES AMORUSO
LICENSE
No 49752
STATE OF FLORIDA
PROFESSIONAL ENGINEER
3/13/12

PTC Product Design Group, LLC
PO Box 520775
Longwood, FL 32752-0775
321-690-1788 (P) 321-690-1789 (F)
FBPE Cert. of Auth. No. 25935

PRODUCT REVISED
as complying with the Florida
Building Code
Acceptance No 12-0320.14
Expiration Date Oct. 14, 2014
By Manuel Diaz
Miami Dade Product Control

WINDOOR
INCORPORATED
7500 AMSTERDAM DRIVE
ORLANDO, FL 32832
Phone: 407.481.8400
Fax: 407.481.0505
www.windoorinc.com

DRAWING TITLE:
SERIES 3000/ 4000 IMPACT MULLION (LMI & SMI)
HORIZONTAL SECTIONS

SIZE	DRAWN BY:	DWG NO.	REV
.	JBH	FEI0009	A
SCALE NTS	DATE: 07/22/11	SHEET 7OF12	

Table 1A - Anchor Schedule

Substrate	Minimum concrete strength (psi)	Anchor type	Size	Manufacturer or spec	Minimum embedment	Minimum edge distance	Comments
Concrete	3000 psi	Concrete screw - carbon steel	3/16"	ITW/Buildex TAPCON with Advanced Threadform Technology (MD NOA No. 11-0616.05)	1 3/4"	1 1/8"	See Table 2A for performance ratings
Grout filled CMU (masonry)	2000 psi	Concrete screw - carbon steel	3/16"	ITW/Buildex TAPCON with Advanced Threadform Technology (MD NOA No. 11-0616.05)	1 3/4"	1 1/8"	Multiply Table 2A for performance ratings by 0.95
Ungrouted CMU (masonry)	ASTM C-90	Concrete screw - carbon steel	3/16"	ITW/Buildex TAPCON (MD NOA No. 07-1126.10)	1 1/4"	1 1/8"	See Table 2B for performance ratings
Wood frame	NA	Wood screw - carbon steel or stainless steel	#10	ANSI B18.6.1	1 1/2"	1"	See Table 3A for performance ratings
	NA	Tapping screw - carbon steel or stainless steel	#10	ASME B18.6.4, Type AB	1 1/2"	1"	See Table 3B for performance ratings

Table 1A Notes:

1) Other manufacturer's concrete screws may be acceptable if they meet or exceed the allowable shear values of those in Table 1B, are installed at a minimum embedment required for that allowable and the installation meets the edge distance and spacing requirements for the anchor at the prescribed shear value.
2) Allowable shear values (lbs) used in the analysis for the concrete and CMU anchorage is listed in Table 1B. Values shown are an average of the total quantity of screws and the shear allowable per screw used on the clip (either 6 or 8) accounting for spacing and edge distance reduction in capacities.
3) To prevent 1X bucking or 2X bucking or framing from splitting, drill 3/32" diameter holes in wood to accommodate anchors.
4) All screws are flat head.
5) Screw lengths will be sufficient to allow the minimum embedment to be made into the receiving substrate. Where 1X bucks are used, they shall not be considered part of the substrate regardless of their attachment to the structural substrate.

Table 1B - Concrete Screw Shear Allowable Used (per screw)

Substrate	Minimum concrete strength (psi)	Anchor type	Size	Manufacturer or spec	Clip ID	Quantity of anchors	Allowable shear (lbs)
Concrete	3000 psi	Concrete screw - carbon steel	3/16"	ITW/Buildex TAPCON with Advanced Threadform Technology (MD NOA No. 11-0616.05)	FE5708-1	6	209
					FE5708-2	6	196
					FE5708-4	8	208
					FE5708-5	8	202
Grout filled CMU (masonry)	2000 psi	Concrete screw - carbon steel	3/16"	ITW/Buildex TAPCON with Advanced Threadform Technology (MD NOA No. 11-0616.05)	FE5708-1	6	198
					FE5708-2	6	188
					FE5708-4	8	200
					FE5708-5	8	194
Ungrouted CMU (masonry)	ASTM C-90	Concrete screw - carbon steel	3/16"	ITW/Buildex TAPCON (MD NOA No. 07-1126.10)	FE5708-1	6	149
					FE5708-2	6	93
					FE5708-4	8	113
					FE5708-5	8	80

Table 1B Notes:

Values above are an average of the total quantity of screws and the shear allowable per screw used on the clip (either 6 or 8) accounting for spacing and edge distance reduction in capacities.

REVISIONS

SHEET	REV	DESCRIPTION	DATE	BY
.	0	ORIGINAL ISSUE	07/22/11	RJA
.	A	UPDATE TO 2010 FBC	02/14/12	JBH

This drawing and all associated component files are the sole property of WinDoor, Inc. and contains confidential, privileged and patented information. Any reproduction of this drawing is not permitted without written approval from WinDoor, Inc. management.

PRODUCT REVISED
as complying with the Florida Building Code
Acceptance No 12-0320.14
Expiration Date Oct. 14, 2014
By Manuel Perez
Miami Dade Product Control

Robert J. Amoruso, P.E.
FL License No. 49752

ROBERT JAMES AMORUSO LICENSE No 49752 STATE OF FLORIDA PROFESSIONAL ENGINEER 3/13/12

PTC Product Design Group, LLC
PO Box 520775
Longwood, FL 32752-0775
321-690-1788 (P) 321-690-1789 (F)
FBPE Cert. of Auth. No. 25935

WINDOOR INCORPORATED
7500 AMSTERDAM DRIVE
ORLANDO, FL 32832
Phone: 407.481.8400
Fax: 407.481.0505
www.windoorinc.com

DRAWING TITLE:
SERIES 3000/ 4000 IMPACT MULLION (LMI & SMI)
ANCHOR SCHEDULE

SIZE	DRAWN BY:	DWG NO.	REV
.	JBH	FEI0009	A

SCALE	DATE:	SHEET
NTS	07/22/11	8OF12

TABLE 2A - MULLION AND CLIP ANCHORAGE PERFORMANCE RATINGS in Concrete and Masonry

For Concrete (3000 psi) installations use performance ratings (psf) below.
For Grouted CMU (2000 psi) installations multiply performance (psf) below by 0.95.
Design Pressures (psf) when using ITW/Buildex Tapcon Advanced Threadform Technology 3/16" Diameter Concrete Screw

Load width	Mullion Span (in)																			
	73				72				62				55				49			
	Ext. Clip		Sill Clip		Ext. Clip		Sill Clip		Ext. Clip		Sill Clip		Ext. Clip		Sill Clip		Ext. Clip		Sill Clip	
W (in)	FE5708-1	FE5708-4	FE5708-2	FE5708-5	FE5708-1	FE5708-4	FE5708-2	FE5708-5	FE5708-1	FE5708-4	FE5708-2	FE5708-5	FE5708-1	FE5708-4	FE5708-2	FE5708-5	FE5708-1	FE5708-4	FE5708-2	FE5708-5
19	135	135	135	135	135	135	135	135	135	135	135	135	135	135	135	135	135	135	135	135
21	135	135	135	135	135	135	135	135	135	135	135	135	135	135	135	135	135	135	135	135
23	135	135	135	135	135	135	135	135	135	135	135	135	135	135	135	135	135	135	135	135
25	135	135	135	135	135	135	135	135	135	135	135	135	135	135	135	135	135	135	135	135
27	135	135	135	135	135	135	135	135	135	135	135	135	135	135	135	135	135	135	135	135
29	135	135	135	135	135	135	135	135	135	135	135	135	135	135	135	135	135	135	135	135
31	135	135	135	135	135	135	135	135	135	135	135	135	135	135	135	135	135	135	135	135
33	135	135	135	135	135	135	135	135	135	135	135	135	135	135	135	135	135	135	135	135
35	135	135	135	135	135	135	135	135	135	135	135	135	135	135	135	135	135	135	135	135
37	135	135	129	135	135	135	131	135	135	135	135	135	135	135	135	135	135	135	135	135
39	130	135	122	135	132	135	124	135	135	135	135	135	135	135	135	135	135	135	135	135
41	124	135	116	135	125	135	118	135	135	135	135	135	135	135	135	135	135	135	135	135
43	118	135	110	135	119	135	112	135	135	135	130	135	135	135	135	135	135	135	135	135
45	112	135	105	135	114	135	107	135	132	135	124	135	135	135	135	135	135	135	135	135
47	108	135	101	133	109	135	102	135	127	135	119	135	135	135	134	135	135	135	135	135
49	103	135	97	127	105	135	98	129	121	135	114	135	135	135	128	135	135	135	135	135
51	99	131	93	122	100	133	94	124	117	135	109	135	131	135	123	135	135	135	135	135
53	95	126	89	118	96	128	90	119	112	135	105	135	126	135	118	135	135	135	133	135
54	93	124	88	115	95	126	89	117	110	135	103	135	124	135	116	135	135	135	130	135
55	92	122	86	113	93	123	87	115	108	135	101	133	122	135	114	135	135	135	128	135

TABLE 2A - MULLION AND CLIP ANCHORAGE PERFORMANCE RATINGS in Concrete and Masonry

For Concrete (3000 psi) installations use performance ratings (psf) below.
For Grouted CMU (2000 psi) installations multiply performance (psf) below by 0.95.
Design Pressures (psf) when using ITW/Buildex Tapcon Advanced Threadform Technology 3/16" Diameter Concrete Screw

Load width	Mullion Span (in)																			
	43				40				37				31				25			
	Ext. Clip		Sill Clip		Ext. Clip		Sill Clip		Ext. Clip		Sill Clip		Ext. Clip		Sill Clip		Ext. Clip		Sill Clip	
W (in)	FE5708-1	FE5708-4	FE5708-2	FE5708-5	FE5708-1	FE5708-4	FE5708-2	FE5708-5	FE5708-1	FE5708-4	FE5708-2	FE5708-5	FE5708-1	FE5708-4	FE5708-2	FE5708-5	FE5708-1	FE5708-4	FE5708-2	FE5708-5
19	135	135	135	135	135	135	135	135	135	135	135	135	135	135	135	135	135	135	135	135
21	135	135	135	135	135	135	135	135	135	135	135	135	135	135	135	135	135	135	135	135
23	135	135	135	135	135	135	135	135	135	135	135	135	135	135	135	135	135	135	135	135
25	135	135	135	135	135	135	135	135	135	135	135	135	135	135	135	135	135	135	135	135
27	135	135	135	135	135	135	135	135	135	135	135	135	135	135	135	135	135	135	135	135
29	135	135	135	135	135	135	135	135	135	135	135	135	135	135	135	135	135	135	135	135
31	135	135	135	135	135	135	135	135	135	135	135	135	135	135	135	135	135	135	135	135
33	135	135	135	135	135	135	135	135	135	135	135	135	135	135	135	135	135	135	135	135
35	135	135	135	135	135	135	135	135	135	135	135	135	135	135	135	135	135	135	135	135
37	135	135	135	135	135	135	135	135	135	135	135	135	135	135	135	135	135	135	135	135
39	135	135	135	135	135	135	135	135	135	135	135	135	135	135	135	135	135	135	135	135
41	135	135	135	135	135	135	135	135	135	135	135	135	135	135	135	135	135	135	135	135
43	135	135	135	135	135	135	135	135	135	135	135	135	135	135	135	135	135	135	135	135
45	135	135	135	135	135	135	135	135	135	135	135	135	135	135	135	135	135	135	135	135
47	135	135	135	135	135	135	135	135	135	135	135	135	135	135	135	135	135	135	135	135
49	135	135	135	135	135	135	135	135	135	135	135	135	135	135	135	135	135	135	135	135
51	135	135	135	135	135	135	135	135	135	135	135	135	135	135	135	135	135	135	135	135
53	135	135	135	135	135	135	135	135	135	135	135	135	135	135	135	135	135	135	135	135
54	135	135	135	135	135	135	135	135	135	135	135	135	135	135	135	135	135	135	135	135
55	135	135	135	135	135	135	135	135	135	135	135	135	135	135	135	135	135	135	135	135

NOTE:
DESIGN PRESSURES SHOWN IN TABLE 2A ARE POSITIVE AND NEGATIVE (+/-).

PRODUCT REVISED
as complying with the Florida Building Code
Acceptance No 12-0320.14
Expiration Date Oct. 14, 2014
By Manuel Perez
Miami-Dade Product Control

REVISIONS

SHEET	REV	DESCRIPTION	DATE	BY
.	0	ORIGINAL ISSUE	07/22/11	RJA
.	A	UPDATE TO 2010 FBC	02/14/12	JBH

This drawing and all associated component files are the sole property of WinDoor, Inc. and contains confidential, privileged and patented information. Any reproduction of this drawing is not permitted without written approval from WinDoor, Inc. management.

Robert J. Amoruso, P.E.
FL License No. 49752

ROBERT JAMES AMORUSO
LICENSE
No 49752
3/13/12
STATE OF FLORIDA
PROFESSIONAL ENGINEER

PTC Product Design Group, LLC
PO Box 520775
Longwood, FL 32752-0775
321-690-1788 (P) 321-690-1789 (F)
FBPE Cert. of Auth. No. 25935

WINDOOR INCORPORATED
7500 AMSTERDAM DRIVE
ORLANDO, FL 32832
Phone: 407.481.8400
Fax: 407.481.0505
www.windoorinc.com

DRAWING TITLE:
SERIES 3000/ 4000 IMPACT MULLION (LMI & SMI)
CONCRETE/MASONRY DESIGN PRESSURE LIMITS

SIZE	DRAWN BY:	DWG NO.	REV
SIZE	JBH	FEI0009	A
SCALE NTS	DATE: 07/22/11	SHEET 9OF12	

TABLE 2B - MULLION AND CLIP ANCHORAGE PERFORMANCE RATINGS IN UNGROUTED CMU

For CMU (ASTM C90) installations use performance ratings (psf) below
Design Pressures (psf) when using ITW/Buildex Tapcon 3/16" Diameter Concrete Screw

Load width	Mullion Span (in)																			
	73				72				62				55				49			
	Ext. Clip		Sill Clip		Ext. Clip		Sill Clip		Ext. Clip		Sill Clip		Ext. Clip		Sill Clip		Ext. Clip		Sill Clip	
W (in)	FE5708-1	FE5708-4	FE5708-2	FE5708-5	FE5708-1	FE5708-4	FE5708-2	FE5708-5	FE5708-1	FE5708-4	FE5708-2	FE5708-5	FE5708-1	FE5708-4	FE5708-2	FE5708-5	FE5708-1	FE5708-4	FE5708-2	FE5708-5
19	135	135	122	135	135	135	124	135	135	135	135	135	135	135	135	135	135	135	135	135
21	135	135	110	126	135	135	112	128	135	135	130	135	135	135	135	135	135	135	135	135
23	135	135	100	115	135	135	101	116	135	135	118	135	135	135	133	135	135	135	135	135
25	135	135	92	105	135	135	93	107	135	135	108	124	135	135	122	135	135	135	135	135
27	135	135	85	97	135	135	86	98	135	135	100	114	135	135	112	129	135	135	126	135
29	126	127	79	90	128	129	80	91	135	135	93	106	135	135	104	120	135	135	117	134
31	118	119	73	84	119	121	74	85	135	135	86	99	135	135	97	112	135	135	109	125
33	110	111	69	79	112	113	70	80	130	131	81	93	135	135	91	105	135	135	102	118
35	104	105	65	74	105	106	66	75	122	124	76	87	135	135	86	99	135	135	96	111
37	98	99	61	70	99	100	62	71	115	117	72	83	130	131	81	93	135	135	91	104
39	93	94	58	66	94	95	59	67	109	111	68	78	123	125	77	88	135	135	86	99
41	88	89	55	63	89	90	56	64	104	105	65	74	117	118	73	84	131	133	82	94
43	84	85	52	60	85	86	53	61	99	100	62	71	111	113	70	80	125	127	78	90
45	80	81	50	57	81	82	51	58	94	95	59	68	106	108	66	76	119	121	75	85
47	77	78	48	55	78	79	49	56	90	91	56	65	102	103	64	73	114	116	71	82
49	73	74	46	53	75	75	47	53	87	87	54	62	98	99	61	70	109	111	68	78
51	71	71	44	50	72	72	45	51	83	84	52	59	94	95	58	67	105	106	66	75
53	68	69	42	49	69	70	43	49	80	81	50	57	90	91	56	64	101	102	63	72
54	67	67	42	48	67	68	42	48	78	79	49	56	88	89	55	63	99	100	62	71
55	65	66	41	47	66	67	41	47	77	78	48	55	87	88	54	62	97	98	61	70

NOTE:
DESIGN PRESSURES SHOWN IN TABLE 2B ARE POSITIVE AND NEGATIVE (+/-).

TABLE 2B - MULLION AND CLIP ANCHORAGE PERFORMANCE RATINGS IN UNGROUTED CMU

For CMU (ASTM C90) installations use performance ratings (psf) below
Design Pressures (psf) when using ITW/Buildex Tapcon 3/16" Diameter Concrete Screw

Load width	Mullion Span (in)																			
	43				40				37				31				25			
	Ext. Clip		Sill Clip		Ext. Clip		Sill Clip		Ext. Clip		Sill Clip		Ext. Clip		Sill Clip		Ext. Clip		Sill Clip	
W (in)	FE5708-1	FE5708-4	FE5708-2	FE5708-5	FE5708-1	FE5708-4	FE5708-2	FE5708-5	FE5708-1	FE5708-4	FE5708-2	FE5708-5	FE5708-1	FE5708-4	FE5708-2	FE5708-5	FE5708-1	FE5708-4	FE5708-2	FE5708-5
19	135	135	135	135	135	135	135	135	135	135	135	135	135	135	135	135	135	135	135	135
21	135	135	135	135	135	135	135	135	135	135	135	135	135	135	135	135	135	135	135	135
23	135	135	135	135	135	135	135	135	135	135	135	135	135	135	135	135	135	135	135	135
25	135	135	135	135	135	135	135	135	135	135	135	135	135	135	135	135	135	135	135	135
27	135	135	135	135	135	135	135	135	135	135	135	135	135	135	135	135	135	135	135	135
29	135	135	133	135	135	135	135	135	135	135	135	135	135	135	135	135	135	135	135	135
31	135	135	125	135	135	135	134	135	135	135	135	135	135	135	135	135	135	135	135	135
33	135	135	117	134	135	135	126	135	135	135	135	135	135	135	135	135	135	135	135	135
35	135	135	110	126	135	135	118	135	135	135	128	135	135	135	135	135	135	135	135	135
37	135	135	104	119	135	135	112	128	135	135	121	135	135	135	135	135	135	135	135	135
39	135	135	98	113	135	135	106	121	135	135	114	131	135	135	135	135	135	135	135	135
41	135	135	93	107	135	135	100	115	135	135	109	125	135	135	130	135	135	135	135	135
43	135	135	89	102	135	135	96	110	135	135	103	119	135	135	123	135	135	135	135	135
45	135	135	85	97	135	135	91	105	135	135	99	113	135	135	118	135	135	135	135	135
47	130	132	81	93	135	135	87	100	135	135	94	108	135	135	113	129	135	135	135	135
49	125	126	78	89	134	135	84	96	135	135	90	104	135	135	108	124	135	135	134	135
51	120	121	75	86	129	130	80	92	135	135	87	100	135	135	104	119	135	135	129	135
53	115	116	72	82	124	125	77	89	134	135	84	96	135	135	100	114	135	135	124	135
54	113	114	71	81	121	123	76	87	131	133	82	94	135	135	98	112	135	135	121	135
55	111	112	69	79	119	121	74	85	129	130	80	92	135	135	96	110	135	135	119	135

REVISIONS

SHEET	REV	DESCRIPTION	DATE	BY
.	0	ORIGINAL ISSUE	07/22/11	RJA
.	A	UPDATE TO 2010 FBC	02/14/12	JBH

This drawing and all associated component files are the sole property of WinDoor, Inc. and contains confidential, privileged and patented information. Any reproduction of this drawing is not permitted without written approval from WinDoor, Inc. management.

PRODUCT REVISED
as complying with the Florida Building Code
Acceptance No 12-0320.14
Expiration Date Oct. 14, 2014
By Manuel Perez
Miami-Dade Product Control

Robert J. Amoruso, P.E.
FL License No. 49752

ROBERT JAMES AMORUSO LICENSE No 49752 STATE OF FLORIDA PROFESSIONAL ENGINEER 3/13/12

PTC Product Design Group, LLC
PO Box 520775
Longwood, FL 32752-0775
321-690-1788 (P) 321-690-1789 (F)
FBPE Cert. of Auth. No. 25935

WINDOOR INCORPORATED
7500 AMSTERDAM DRIVE
ORLANDO, FL 32832
Phone: 407.481.8400
Fax: 407.481.0505
www.windoorinc.com

DRAWING TITLE:
SERIES 3000/ 4000 IMPACT MULLION (LMI & SMI)
UNGROUTED CMU DESIGN PRESSURE LIMITS

SIZE	DRAWN BY:	DWG NO.	REV
.	JBH	FEI0009	A
SCALE NTS	DATE: 07/22/11	SHEET 10OF12	

TABLE 3A - MULLION AND CLIP ANCHORAGE PERFORMANCE RATINGS IN WOOD FRAMING

Design Pressures (psf) when using #10 wood Screws meeting ANSI B18.6.1

Load width W (in)	Mullion Span (in)																			
	73				72				62				55				49			
	Ext. Clip		Sill Clip		Ext. Clip		Sill Clip		Ext. Clip		Sill Clip		Ext. Clip		Sill Clip		Ext. Clip		Sill Clip	
	FE5708-1	FE5708-4	FE5708-2	FE5708-5	FE5708-1	FE5708-4	FE5708-2	FE5708-5	FE5708-1	FE5708-4	FE5708-2	FE5708-5	FE5708-1	FE5708-4	FE5708-2	FE5708-5	FE5708-1	FE5708-4	FE5708-2	FE5708-5
19	135	135	135	135	135	135	135	135	135	135	135	135	135	135	135	135	135	135	135	135
21	135	135	135	135	135	135	135	135	135	135	135	135	135	135	135	135	135	135	135	135
23	135	135	135	135	135	135	135	135	135	135	135	135	135	135	135	135	135	135	135	135
25	135	135	135	135	135	135	135	135	135	135	135	135	135	135	135	135	135	135	135	135
27	135	135	135	135	135	135	135	135	135	135	135	135	135	135	135	135	135	135	135	135
29	135	135	135	135	135	135	135	135	135	135	135	135	135	135	135	135	135	135	135	135
31	135	135	135	135	135	135	135	135	135	135	135	135	135	135	135	135	135	135	135	135
33	127	135	127	135	129	135	129	135	135	135	135	135	135	135	135	135	135	135	135	135
35	120	135	120	135	121	135	121	135	135	135	135	135	135	135	135	135	135	135	135	135
37	113	135	113	135	115	135	115	135	133	135	133	135	135	135	135	135	135	135	135	135
39	107	135	107	135	109	135	109	135	126	135	126	135	135	135	135	135	135	135	135	135
41	102	135	102	135	103	135	103	135	120	135	120	135	135	135	135	135	135	135	135	135
43	97	129	97	129	98	131	98	131	114	135	114	135	129	135	129	135	135	135	135	135
45	93	123	93	123	94	125	94	125	109	135	109	135	123	135	123	135	135	135	135	135
47	89	118	89	118	90	120	90	120	104	135	104	135	117	135	117	135	132	135	132	135
49	85	113	85	113	86	115	86	115	100	133	100	133	113	135	113	135	126	135	126	135
51	81	109	81	109	83	110	83	110	96	128	96	128	108	135	108	135	121	135	121	135
53	78	104	78	104	79	106	79	106	92	123	92	123	104	135	104	135	117	135	117	135
54	77	102	77	102	78	104	78	104	90	121	90	121	102	135	102	135	114	135	114	135
55	75	101	75	101	76	102	76	102	89	118	89	118	100	133	100	133	112	135	112	135

NOTE:
DESIGN PRESSURES SHOWN IN TABLE 3A ARE POSITIVE AND NEGATIVE (+/-).

TABLE 3A - MULLION AND CLIP ANCHORAGE PERFORMANCE RATINGS IN WOOD FRAMING

Design Pressures (psf) when using #10 wood Screws meeting ANSI B18.6.1

Load width W (in)	Mullion Span (in)																			
	43				40				37				31				25			
	Ext. Clip		Sill Clip		Ext. Clip		Sill Clip		Ext. Clip		Sill Clip		Ext. Clip		Sill Clip		Ext. Clip		Sill Clip	
	FE5708-1	FE5708-4	FE5708-2	FE5708-5	FE5708-1	FE5708-4	FE5708-2	FE5708-5	FE5708-1	FE5708-4	FE5708-2	FE5708-5	FE5708-1	FE5708-4	FE5708-2	FE5708-5	FE5708-1	FE5708-4	FE5708-2	FE5708-5
19	135	135	135	135	135	135	135	135	135	135	135	135	135	135	135	135	135	135	135	135
21	135	135	135	135	135	135	135	135	135	135	135	135	135	135	135	135	135	135	135	135
23	135	135	135	135	135	135	135	135	135	135	135	135	135	135	135	135	135	135	135	135
25	135	135	135	135	135	135	135	135	135	135	135	135	135	135	135	135	135	135	135	135
27	135	135	135	135	135	135	135	135	135	135	135	135	135	135	135	135	135	135	135	135
29	135	135	135	135	135	135	135	135	135	135	135	135	135	135	135	135	135	135	135	135
31	135	135	135	135	135	135	135	135	135	135	135	135	135	135	135	135	135	135	135	135
33	135	135	135	135	135	135	135	135	135	135	135	135	135	135	135	135	135	135	135	135
35	135	135	135	135	135	135	135	135	135	135	135	135	135	135	135	135	135	135	135	135
37	135	135	135	135	135	135	135	135	135	135	135	135	135	135	135	135	135	135	135	135
39	135	135	135	135	135	135	135	135	135	135	135	135	135	135	135	135	135	135	135	135
41	135	135	135	135	135	135	135	135	135	135	135	135	135	135	135	135	135	135	135	135
43	135	135	135	135	135	135	135	135	135	135	135	135	135	135	135	135	135	135	135	135
45	135	135	135	135	135	135	135	135	135	135	135	135	135	135	135	135	135	135	135	135
47	135	135	135	135	135	135	135	135	135	135	135	135	135	135	135	135	135	135	135	135
49	135	135	135	135	135	135	135	135	135	135	135	135	135	135	135	135	135	135	135	135
51	135	135	135	135	135	135	135	135	135	135	135	135	135	135	135	135	135	135	135	135
53	133	135	133	135	135	135	135	135	135	135	135	135	135	135	135	135	135	135	135	135
54	130	135	130	135	135	135	135	135	135	135	135	135	135	135	135	135	135	135	135	135
55	128	135	128	135	135	135	135	135	135	135	135	135	135	135	135	135	135	135	135	135

PRODUCT REVISED
as complying with the Florida
Building Code
Acceptance No 12-0320.14
Expiration Date Oct. 14, 2014
By Manuel Perez
Miami Dade Product Control

REVISIONS

SHEET	REV	DESCRIPTION	DATE	BY
.	0	ORIGINAL ISSUE	07/22/11	RJA
.	A	UPDATE TO 2010 FBC	02/14/12	JBH

This drawing and all associated component files are the sole property of WinDoor, Inc. and contains confidential, privileged and patented information. Any reproduction of this drawing is not permitted without written approval from WinDoor, Inc. management.

Robert J. Amoruso, P.E.
FL License No. 49752

ROBERT JAMES AMORUSO
LICENSE
No 49752
3/13/12
STATE OF FLORIDA
PROFESSIONAL ENGINEER

PTC Product Design Group, LLC
PO Box 520775
Longwood, FL 32752-0775
321-690-1788 (P) 321-690-1789 (F)
FBPE Cert. of Auth. No. 25935

WINDOOR INCORPORATED
7500 AMSTERDAM DRIVE
ORLANDO, FL 32832
Phone: 407.481.8400
Fax: 407.481.0505
www.windoorinc.com

DRAWING TITLE:
SERIES 3000/ 4000 IMPACT MULLION (LMI & SMI)
WOOD FRAME DESIGN PRESSURE LIMITS

SIZE	DRAWN BY:	DWG NO.	REV
.	JBH	FEI0009	A

SCALE	DATE:	SHEET
NTS	07/22/11	11OF12

TABLE 3B - MULLION AND CLIP ANCHORAGE PERFORMANCE RATINGS IN WOOD FRAMING

Design Pressures (psf) when using #10 Tapping Screws Type AB meeting ASME B18.6.4

Load width W (in)	Mullion Span (in)																			
	73				72				62				55				49			
	Ext. Clip		Sill Clip		Ext. Clip		Sill Clip		Ext. Clip		Sill Clip		Ext. Clip		Sill Clip		Ext. Clip		Sill Clip	
	FE5708-1	FE5708-4	FE5708-2	FE5708-5	FE5708-1	FE5708-4	FE5708-2	FE5708-5	FE5708-1	FE5708-4	FE5708-2	FE5708-5	FE5708-1	FE5708-4	FE5708-2	FE5708-5	FE5708-1	FE5708-4	FE5708-2	FE5708-5
19	135	135	135	135	135	135	135	135	135	135	135	135	135	135	135	135	135	135	135	135
21	135	135	135	135	135	135	135	135	135	135	135	135	135	135	135	135	135	135	135	135
23	125	135	125	135	127	135	127	135	135	135	135	135	135	135	135	135	135	135	135	135
25	114	135	114	135	116	135	116	135	135	135	135	135	135	135	135	135	135	135	135	135
27	106	135	106	135	107	135	107	135	124	135	124	135	135	135	135	135	135	135	135	135
29	98	131	98	131	99	133	99	133	115	135	115	135	130	135	130	135	135	135	135	135
31	92	122	92	122	93	124	93	124	108	135	108	135	121	135	121	135	135	135	135	135
33	86	114	86	114	87	116	87	116	101	135	101	135	114	135	114	135	128	135	128	135
35	81	108	81	108	82	109	82	109	95	127	95	127	107	135	107	135	120	135	120	135
37	76	102	76	102	77	103	77	103	90	120	90	120	101	135	101	135	114	135	114	135
39	72	96	72	96	73	98	73	98	85	113	85	113	96	128	96	128	108	135	108	135
41	69	92	69	92	70	93	70	93	81	108	81	108	91	121	91	121	102	135	102	135
43	65	87	65	87	66	88	66	88	77	103	77	103	87	116	87	116	97	130	97	130
45	62	83	62	83	63	84	63	84	73	98	73	98	83	110	83	110	93	124	93	124
47	60	80	60	80	61	81	61	81	70	94	70	94	79	106	79	106	89	119	89	119
49	57	76	57	76	58	77	58	77	67	90	67	90	76	101	76	101	85	114	85	114
51	55	73	55	73	56	74	56	74	65	86	65	86	73	97	73	97	82	109	82	109
53	53	70	53	70	54	71	54	71	62	83	62	83	70	93	70	93	79	105	79	105
54	52	69	52	69	53	70	53	70	61	81	61	81	69	92	69	92	77	103	77	103
55	51	68	51	68	52	69	52	69	60	80	60	80	67	90	67	90	76	101	76	101

NOTE:
DESIGN PRESSURES SHOWN IN TABLE 3B ARE POSITIVE AND NEGATIVE (+/-).

TABLE 3B - MULLION AND CLIP ANCHORAGE PERFORMANCE RATINGS IN WOOD FRAMING

Design Pressures (psf) when using #10 Tapping Screws Type AB meeting ASME B18.6.4

Load width W (in)	Mullion Span (in)																			
	43				40				37				31				25			
	Ext. Clip		Sill Clip		Ext. Clip		Sill Clip		Ext. Clip		Sill Clip		Ext. Clip		Sill Clip		Ext. Clip		Sill Clip	
	FE5708-1	FE5708-4	FE5708-2	FE5708-5	FE5708-1	FE5708-4	FE5708-2	FE5708-5	FE5708-1	FE5708-4	FE5708-2	FE5708-5	FE5708-1	FE5708-4	FE5708-2	FE5708-5	FE5708-1	FE5708-4	FE5708-2	FE5708-5
19	135	135	135	135	135	135	135	135	135	135	135	135	135	135	135	135	135	135	135	135
21	135	135	135	135	135	135	135	135	135	135	135	135	135	135	135	135	135	135	135	135
23	135	135	135	135	135	135	135	135	135	135	135	135	135	135	135	135	135	135	135	135
25	135	135	135	135	135	135	135	135	135	135	135	135	135	135	135	135	135	135	135	135
27	135	135	135	135	135	135	135	135	135	135	135	135	135	135	135	135	135	135	135	135
29	135	135	135	135	135	135	135	135	135	135	135	135	135	135	135	135	135	135	135	135
31	135	135	135	135	135	135	135	135	135	135	135	135	135	135	135	135	135	135	135	135
33	135	135	135	135	135	135	135	135	135	135	135	135	135	135	135	135	135	135	135	135
35	135	135	135	135	135	135	135	135	135	135	135	135	135	135	135	135	135	135	135	135
37	129	135	129	135	135	135	135	135	135	135	135	135	135	135	135	135	135	135	135	135
39	123	135	123	135	132	135	132	135	135	135	135	135	135	135	135	135	135	135	135	135
41	117	135	117	135	125	135	125	135	135	135	135	135	135	135	135	135	135	135	135	135
43	111	135	111	135	119	135	119	135	129	135	129	135	135	135	135	135	135	135	135	135
45	106	135	106	135	114	135	114	135	123	135	123	135	135	135	135	135	135	135	135	135
47	101	135	101	135	109	135	109	135	118	135	118	135	135	135	135	135	135	135	135	135
49	97	129	97	129	104	135	104	135	113	135	113	135	135	135	135	135	135	135	135	135
51	93	124	93	124	100	134	100	134	108	135	108	135	129	135	129	135	135	135	135	135
53	90	120	90	120	96	128	96	128	104	135	104	135	124	135	124	135	135	135	135	135
54	88	117	88	117	95	126	95	126	102	135	102	135	122	135	122	135	135	135	135	135
55	86	115	86	115	93	124	93	124	100	134	100	134	120	135	120	135	135	135	135	135

PRODUCT REVISED
as complying with the Florida Building Code
Acceptance No 12-0320.14
Expiration Date Oct. 14, 2014
By Manuel Perez
Miami-Dade Product Control

REVISIONS

SHEET	REV	DESCRIPTION	DATE	BY
.	0	ORIGINAL ISSUE	07/22/11	RJA
.	A	UPDATE TO 2010 FBC	02/14/12	JBH

This drawing and all associated component files are the sole property of WinDoor, Inc. and contains confidential, privileged and patented information. Any reproduction of this drawing is not permitted without written approval from WinDoor, Inc. management.

Robert J. Amoruso, P.E.
FL License No. 49752

ROBERT JAMES AMORUSO LICENSE No 49752 STATE OF FLORIDA PROFESSIONAL ENGINEER
3/13/12

PTC Product Design Group, LLC
PO Box 520775
Longwood, FL 32752-0775
321-690-1788 (P) 321-690-1789 (F)
FBPE Cert. of Auth. No. 25935

WINDOOR INCORPORATED
7500 AMSTERDAM DRIVE
ORLANDO, FL 32832
Phone: 407.481.8400
Fax: 407.481.0505
www.windoorinc.com

DRAWING TITLE:
SERIES 3000/ 4000 IMPACT MULLION (LMI & SMI)
WOOD FRAME DESIGN PRESSURE LIMITS

SIZE	DRAWN BY:	DWG NO.	REV
SIZE	JBH	FEI0009	A
SCALE NTS	DATE: 07/22/11	SHEET 12OF12	