MIAMI-DADE COUNTY
DEPARTMENT OF PERMITTING, ENVIRONMENT, AND REGULATORY AFFAIRS (PERA)
BOARD AND CODE ADMINISTRATION DIVISION

MIAMI-DADE COUNTY
PRODUCT CONTROL SECTION
11805 SW 26 Street, Room 208
Miami, Florida 33175-2474
T (786) 315-2590 F (786) 315-2599
www.miamidade.gov/pera

NOTICE OF ACCEPTANCE (NOA)

WinDoor, Inc.
7500 Amsterdam Drive
Orlando, FL 32832

SCOPE:

This NOA is being issued under the applicable rules and regulations governing the use of construction materials. The documentation submitted has been reviewed and accepted by Miami-Dade County PERA - Product Control Section to be used in Miami Dade County and other areas where allowed by the Authority Having Jurisdiction (AHJ).

This NOA shall not be valid after the expiration date stated below. The Miami-Dade County Product Control Section (In Miami Dade County) and/or the AHJ (in areas other than Miami Dade County) reserve the right to have this product or material tested for quality assurance purposes. If this product or material fails to perform in the accepted manner, the manufacturer will incur the expense of such testing and the AHJ may immediately revoke, modify, or suspend the use of such product or material within their jurisdiction. PERA reserves the right to revoke this acceptance, if it is determined by Miami-Dade County Product Control Section that this product or material fails to meet the requirements of the applicable building code.

This product is approved as described herein, and has been designed to comply with the Florida Building Code, including the High Velocity Hurricane Zone.

DESCRIPTION: Series "4000 Twin" Aluminum Single Hung Window – S.M.I.

APPROVAL DOCUMENT: Drawing No. **FEI0012**, titled "Series 4000 Twin SH Impact (SMI) Window", sheets 1 through 9 of 9 dated 07/19/11, with revision A dated 02/14/12, prepared by PTC, Product Design Group, LLC, signed and sealed by Robert James Amoruso, P.E., bearing the Miami-Dade County Product Control Revision stamp with the Notice of Acceptance number and expiration date by the Miami-Dade County Product Control Section.

MISSILE IMPACT RATING: Small Missile Impact Resistant

LABELING: Each unit shall bear a permanent label with the manufacturer's name or logo, city, state, model/series, and following statement: "Miami-Dade County Product Control Approved", unless otherwise noted herein.

RENEWAL of this NOA shall be considered after a renewal application has been filed and there has been no change in the applicable building code negatively affecting the performance of this product.

TERMINATION of this NOA will occur after the expiration date or if there has been a revision or change in the materials, use, and/or manufacture of the product or process. Misuse of this NOA as an endorsement of any product, for sales, advertising or any other purposes shall automatically terminate this NOA. Failure to comply with any section of this NOA shall be cause for termination and removal of NOA.

ADVERTISEMENT: The NOA number preceded by the words Miami-Dade County, Florida, and followed by the expiration date may be displayed in advertising literature. If any portion of the NOA is displayed, then it shall be done in its entirety.

INSPECTION: A copy of this entire NOA shall be provided to the user by the manufacturer or its distributors and shall be available for inspection at the job site at the request of the Building Official.

This NOA **revises NOA # 11-0815.14** and consists of this page 1 and evidence pages E-1 and E-2, as well as approval document mentioned above.

The submitted documentation was reviewed by **Manuel Perez, P.E.**

MIAMI-DADE COUNTY APPROVED

5/24/12

NOTICE OF ACCEPTANCE: EVIDENCE SUBMITTED

A. DRAWINGS

1. Manufacturer's die drawings and sections.
2. Drawing No **FEI0012**, Sheets 1 through 9 of 9, titled "Series 4000 Twin SH Impact (SMI) Window", dated 07/19/11, with revision A dated 02/14/12, prepared by PTC Product Design Group, LLC, signed and sealed by Robert James Amoruso, P.E.

B. TESTS

1. Test reports on: 1) Air Infiltration Test, per TAS 202-94
   2) Uniform Static Air Pressure Test, Loading per TAS 202-94
   3) Water Resistance Test, per TAS 202-94
   4) Small Missile Impact Test, TAS PA 201-94
   5) Cyclic Loading Test, per FBC TAS 203-94
   6) Forced Entry Test, per FBC 2411 3.2.1, TAS 202-94

   along with installation diagram of a "Milestone Commercial Series 5000 continuous head and sill single hung double window, marked-up by National Certified Testing Laboratories, Test Report No. **NCTL-210-3584-2,** dated 02/18/09, signed and sealed by Gerard J. Ferrara, P.E.
   (Submitted under previous NOA #10-0427.02)

C. CALCULATIONS:

1. Anchor verification calculations and structural analysis, complying with FBC-2007, dated 12/04/09, prepared by PTC, LLC, signed and sealed by Robert James Amoruso, P.E.
   (Submitted under previous NOA #11-0815.14)
2. Glazing complies with ASTM E1300-04

D. QUALITY ASSURANCE

1. Miami-Dade Department of Permitting, Environment, and Regulatory Affairs (PERA)

E. MATERIAL CERTIFICATIONS

1. Notice of Acceptance No. **11–0624.02** issued to **E.I. DuPont DeNemours & Co.**, Inc. for their "**DuPont SentryGlas® Interlayer**" dated 08/25/11, expiring on 01/14/17.

Manuel Perez, P.E.
Product Control Examiner
NOA No. 12-0320.18
Expiration Date: November 04, 2015
Approval Date: May 31, 2012

NOTICE OF ACCEPTANCE: EVIDENCE SUBMITTED

F. STATEMENTS

1. Statement letter of conformance, complying with FBC-2007 and FBC-2010, and no financial interest, dated March 13, 2012, signed and sealed by Robert James Amoruso, P.E.
3. Laboratory compliance letters for Test Reports No. **NCTL-210-3584-2,** issued by National Certified Testing Laboratories, dated April 29, 2009, signed and sealed by Gerard J. Ferrara, P.E.
   (Submitted under previous NOA #10-0427.02)

G. OTHERS

1. Notice of Acceptance No. **11-0815.14**, issued to WinDoor, Inc. for their Series "4000 Twin" Aluminum Single Hung Window – S.M.I., approved on 09/29/11 and expiring on 11/04/15.

Manuel Perez, P.E.
Product Control Examiner
NOA No. 12-0320.18
Expiration Date: November 04, 2015
Approval Date: May 31, 2012

WINDOOR Inc.

IMPACT SH Twin Window, SMI

INSTALLATION ANCHORAGE DETAILS

GENERAL NOTES:

1. THIS PRODUCT IS DESIGNED TO COMPLY WITH THE HIGH VELOCITY HURRICANE ZONE (HVHZ) OF THE 2007 AND 2010 FLORIDA BUILDING CODE (FBC) AT THE DESIGN PRESSURES STATED HEREIN. THE PRODUCT DETAILS CONTAINED HEREIN ARE BASED UPON SIGNED AND SEALED TEST REPORT # NCTL-210-3745-2A (SMI) DATED 04/29/2009 AND ASSOCIATED LABORATORY STAMPED DRAWINGS AND WERE TESTED IN ACCORDANCE WITH CURRENT DADE COUNTY PROTOCOLS.

2. ADEQUACY OF THE EXISTING STRUCTURAL CONCRETE MASONRY AND 2X FRAMING AS A MAIN WIND FORCE RESISTING SYSTEM CAPABLE OF WITHSTANDING AND TRANSFERRING APPLIED PRODUCT LOADS TO THE STRUCTURE IS THE RESPONSIBILITY OF THE ENGINEER OR ARCHITECT OF RECORD.

3. WHEN WOOD BUCKS ARE USED, THEY SHALL NOT BE CONSIDERED PART OF THE STRUCTURAL SUBSTRATE REGARDLESS OF THEIR ATTACHMENT TO THE STRUCTURAL SUBSTRATE. WOOD BUCKS SHALL BE DESIGNED AND ANCHORED TO PROPERLY TRANSFER ALL LOADS TO THE STRUCTURE. BUCK DESIGN AND INSTALLATION IS THE RESPONSIBILITY OF THE ENGINEER OR ARCHITECT OF RECORD.

4. WHEN 1X AND 2X WOOD BUCKS ARE USED AND IN CONTACT WITH CONCRETE AND/OR MASONRY, THE WOOD USED SHALL BE EITHER A PRESERVATIVE TREATED SOUTHERN YELLOW PINE OR A DURABLE WOOD SPECIES IN ACCORDANCE WITH 2007 AND 2010 FBC – BUILDING, SECTION 2326.2. THE WOOD USED MUST HAVE A SPECIFIC GRAVITY OF 0.55 MINIMUM.

5. AN IMPACT PROTECTIVE SYSTEM (I.E. SHUTTERS, ETC.) IS NOT REQUIRED WITH THESE WINDOWS.

6. WINDOW FRAME MATERIAL: ALUMINUM 6063-T6 AND 6005-T5.

7. GLASS MEETS THE REQUIREMENTS OF ASTM E1300-04.

8. DESIGNATIONS "X" AND "O" STANDS FOR THE FOLLOWING: X: OPERABLE SASH, O: FIXED LITE.

9. A 1/3 INCREASE IN ALLOWABLE STRESS FOR WIND LOADS WAS NOT USED IN THE DESIGN OF THE PRODUCTS SHOWN HEREIN. WIND LOAD DURATION FACTOR (Cd = 1.6) HAS NOT BEEN USED FOR WOOD ANCHOR DESIGN.

INSTALLATION NOTES:

1. ONE (1) INSTALLATION ANCHOR IS REQUIRED AT EACH ANCHOR LOCATION SHOWN ON THE ELEVATIONS.

2. NOT APPLICABLE.

3. ALL INSTALLATION ANCHORS MUST HAVE A CORROSION RESISTANT COATING OR BE MADE OF STAINLESS STEEL.

4. SEAL FRAME CORNERS AT SILL-TO-JAMB AND HEAD-TO-JAMB WITH SMALL JOINT SEAM SEALANT. SEE CORNER DETAIL.

5. SEAL ALL INSTALLATION ANCHOR HEADS WITH SMALL JOINT SEAM SEALANT DURING INSTALLATION. APPLY SEALANT IN COUNTERSINK BEFORE ANCHOR INSTALLATION AND SEAL ANCHOR HEAD AFTER ANCHOR INSTALLATION.

6. THE SPACING OF INSTALLATION ANCHORS DEPICTED IS THE MAXIMUM SPACING TO BE USED FOR PRODUCT INSTALLATION. ANCHORS ARE TO MATCH TYPE, SIZE, EDGE DISTANCE AND EMBEDMENT OF THOSE SHOWN IN TABLE 1 FOR RESPECTIVE SUBSTRATE.

7. SHIM AS REQUIRED AT EACH INSTALLATION ANCHOR WITH LOAD BEARING SHIM(S). MAXIMUM ALLOWABLE SHIM THICKNESS IS 1/4 INCH. SHIM WHERE SPACE OF 1/16 INCH OR GREATER OCCURS. SHIM(S) SHALL BE CONSTRUCTED OF HIGH DENSITY PLASTIC OR BETTER.

8. FOR INSTALLATION INTO WOOD FRAMING, USE WOOD SCREWS OR TAPPING SCREWS OF SUFFICIENT LENGTH TO ACHIEVE THE MINIMUM EMBEDMENT, MINIMUM EDGE DISTANCE AND MINIMUM ANCHOR SEPARATION OF 1 INCH AS SHOWN IN TABLE 1.

9. FOR INSTALLATION THROUGH 1X WOOD BUCK TO CONCRETE / MASONRY, OR DIRECTLY INTO CONCRETE / MASONRY, USE CONCRETE SCREWS OF SUFFICIENT LENGTH TO ACHIEVE MINIMUM EMBEDMENT AND MINIMUM EDGE DISTANCE AS SHOWN IN TABLE 1. FOR 1X WOOD BUCKS, 3/4" EDGE DISTANCE IS ALLOWED. TO PREVENT WOOD BUCKING FROM SPLITTING, DRILL 1/4" DIAMETER HOLE TO ACCOMMODATE ANCHORS.

10. FOR INSTALLATION INTO MIAMI-DADE APPROVED MULLION, USE TAPPING SCREWS OF SUFFICIENT LENGTH TO ACHIEVE A MINIMUM OF 3 THREADS EMBEDMENT PAST INSIDE OF MULLION'S WEB AS SHOWN ON TABLE 1. APPLICABLE ONLY FOR JAMB TO MULLION CONNECTION, SHIMS CANNOT BE USED.

11. MINIMUM EMBEDMENT AND EDGE DISTANCE EXCLUDE WALL FINISHES (INCLUDING BUT NOT LIMITED TO STUCCO, FOAM, BRICK VENEER AND SIDING).

12. FOR CONCRETE BLOCK, DO NOT INSTALL INSTALLATION ANCHORS INTO MORTAR JOINTS. EDGE DISTANCE IS MEASURED FROM FREE EDGE OF BLOCK OR EDGE OF MORTAR JOINT INTO FACE SHELL OF BLOCK.

13. INSTALLATION ANCHOR CAPACITIES FOR PRODUCTS HEREIN ARE BASED ON SUBSTRATE MATERIALS WITH THE FOLLOWING PROPERTIES:
    A. WOOD - SOUTHERN YELLOW PINE. MINIMUM SPECIFIC GRAVITY OF 0.55.
    B. CONCRETE - MINIMUM COMPRESSIVE STRENGTH SHOWN IN TABLE 1 AND COMPLIES WITH ACI 301.
    C. MASONRY - STRENGTH CONFORMANCE TO ASTM C-90 MEDIUM WEIGHT (DENSITY > 117 PCF). GROUT FILLED PER FLORIDA BUILDING CODE.

Table 1 - ANCHOR SCHEDULE

Substrate	Minimum Concrete Strength (psi)	Anchor Type	Size	Manufacturer	Minimum Embedment (in)	Minimum Edge Distance (in)
CMU	ASTM C90	Carbon Steel Concrete Screw	1/4"	ITW Buildex Tapcon	1 1/4	2 1/2
				ITW Buildex Tapcon with Advanced Threadform Technology	1	2
				Elco Ultracon	1 1/4	1 1/2
Filled (Grouted) CMU	2000	Carbon Steel Concrete Screw	1/4"	ITW Buildex Tapcon with Advanced Threadform Technology	1 3/4	1 1/2
	2000	Carbon Steel Concrete Screw		Elco Ultracon	1 3/4	2 1/2
Concrete	2000	Carbon Steel Concrete Screw	1/4"	ITW Buildex Tapcon with Advanced Threadform Technology	1 3/4	1 1/2
	2700	Carbon Steel Concrete Screw		Elco Ultracon	1 3/4	1 1/2
Wood Frame	n/a	Wood or Tapping Screw (Carbon or Stainless Steel)	#14 WS 1/4" TS	ANSI B18.6.1 or ASME B18.6.4, Type AB	1 1/2	1
Mullion (Jamb Only)	n/a	Tapping Screw (Carbon or Stainless Steel)	1/4"	ASME B18.6.4	3 screw threads embedment past inside of mullion's web.	n/a

Table 1 - Notes:

A. Other manufacturer's concrete screws may be acceptable if they meet or exceed the allowable shear value of 303 lbs for concrete or grout-filled CMU or 202 lbs for hollow CMU, are installed at a minimum embedment required for that allowable and the installation meets the edge distance and spacing requirements for that anchor at the prescribed shear capacity.
B. All screws will be "flat" head.
C. Screw lengths will be sufficient to allow the minimum embedment to be made into the receiving substrate.
D. CMU: Concrete Masonry Unit.

TABLE OF CONTENTS

SHEET	REV.	SHEET DESCRIPTION
1	---	GENERAL AND INSTALLATION NOTES
2	---	ANCHOR LAYOUT & DP TABLE
3	---	LIMITATION TABLES FOR CONCRETE & CMU
4	---	LIMITATION TABLES FOR WOOD
5	---	VERTICAL SECTIONS
6	---	VERTICAL SECTIONS
7	---	VERTICAL SECTION & CORNER DETAIL
8	---	HORIZONTAL SECTIONS
9	---	COMPONENTS, BOM & GLAZING DETAILS

PRODUCT REVISED
as complying with the Florida Building Code
Acceptance No 12-0320.18
Expiration Date Nov. 4, 2015
By Manuel Perez
Miami-Dade Product Control

REVISIONS

SHEET	REV	DESCRIPTION	DATE	BY
.	0	ORIGINAL ISSUE	07/19/11	RJA
.	A	UPDATE TO 2010 FBC	02/14/12	JBH

This drawing and all associated component files are the sole property of WinDoor, Inc. and contains confidential, privileged and patented information. Any reproduction of this drawing is not permitted without written approval from WinDoor, Inc. management.

Robert J. Amoruso, P.E.
FL License No. 49752

ROBERT JAMES AMORUSO LICENSE No 49752 STATE OF FLORIDA PROFESSIONAL ENGINEER

PTC Product Design Group, LLC
PO Box 520775
Longwood, FL 32752-0775
321-690-1788 (P) 321-690-1789 (F)
FBPE Cert. of Auth. No. 25935

WINDOOR INCORPORATED
7500 AMSTERDAM DRIVE
ORLANDO, FL 32832
Phone: 407.481.8400
Fax: 407.481.0505
www.windoorinc.com

DRAWING TITLE:
SERIES 4000 TWIN SH IMPACT (SMI) WINDOW
GENERAL AND INSTALLATION NOTES

SIZE	DRAWN BY:	DWG NO.	REV
.	JBH	FEI0012	A
SCALE NTS	DATE: 07/19/11	SHEET 1OF9	

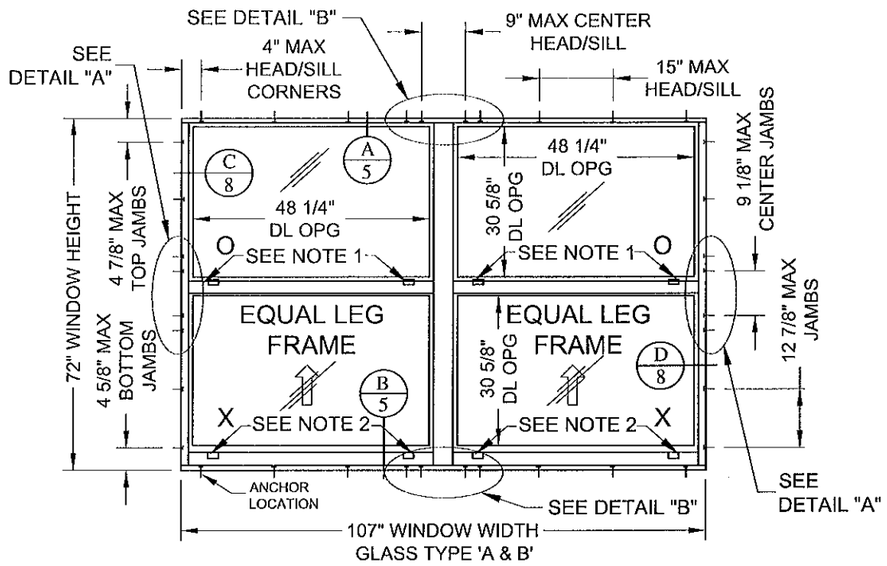

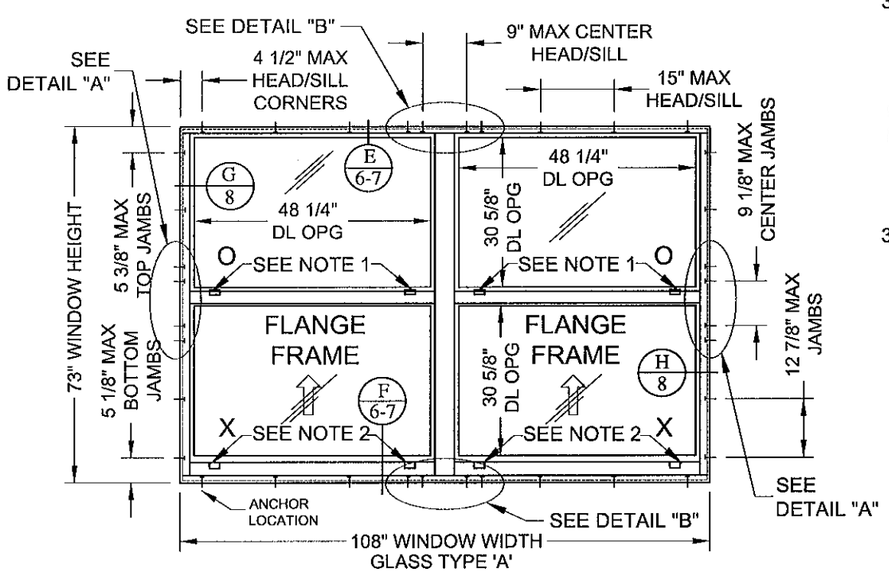

ELEVATION 1

NOTE 1:
ITEM 35; METAL CAM-SWEEP LOCK. (2X) PER SASH LOCATED 4" FROM EACH END OF MEETING RAIL.

NOTE 2:
ITEM 15; SILL LOCK. (2X) PER SASH.

Table 2 - Design Pressure (psf) for Small Missile Impact					
Elevation	Window Size based on Buck Width and Height (in)		Design Pressure (psf) Concrete/Masonry, and Wood Substrates (see Table 3 for exceptions)		Impact Rating
	Width	Height	Lami	Lami+IG	
1	up to 107"	up to 72"	120	120	Small Missile Impact

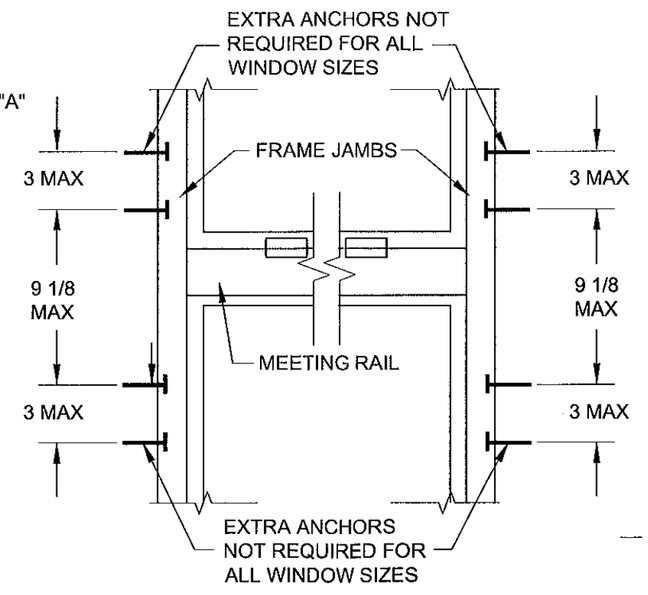

DETAIL "A"

ENHANCED ANCHORAGE AT MEETING RAIL (NTS) REQUIRED ON ALL SIZES WITH BUCK HEIGHT 30 1/2" AND GREATER

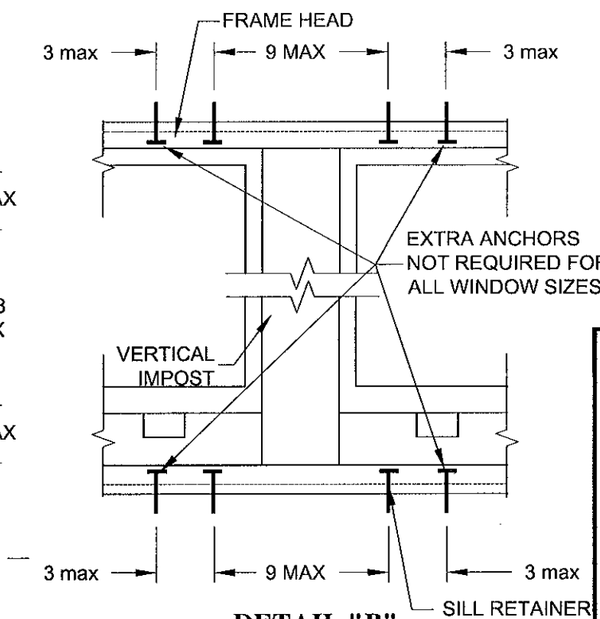

DETAIL "B"

ENHANCED ANCHORAGE AT IMPOST (NTS) SEE TABLE 4 FOR WINDOW SIZES REQUIRING ENHANCED ANCHORAGE.

PRODUCT REVISED
as complying with the Florida Building Code
Acceptance No 12-0320.18
Expiration Date Nov. 4, 2015
By Manuel Perez
Miami-Dade Product Control

NOTES:
1- FOR EQUAL LEG WINDOWS, BUCK DIMENSIONS ARE THE SAME AS WINDOW DIMENSIONS.
2- FOR FLANGE WINDOWS, BUCK DIMENSIONS ARE 1" LESS THAN WINDOW DIMENSIONS.
3- ELEVATIONS ARE VIEWED FROM EXTERIOR.
4- SCREENS ARE NOT SHOWN FOR CLARITY.
5- ALL DIMENSIONS ARE IN INCHES.
6- DL OPG: DAY LIGHT OPENING.

REVISIONS

SHEET	REV	DESCRIPTION	DATE	BY
.	0	ORIGINAL ISSUE	07/19/11	RJA
.	A	UPDATE TO 2010 FBC	02/14/12	JBH

This drawing and all associated component files are the sole property of WinDoor, Inc. and contains confidential, privileged and patented information. Any reproduction of this drawing is not permitted without written approval from WinDoor, Inc. management.

Robert J. Amoruso, P.E.
FL License No. 49752
ROBERT JAMES AMORUSO LICENSE No 49752 STATE OF FLORIDA PROFESSIONAL ENGINEER
3/13/12

PTC Product Design Group, LLC
PO Box 520775
Longwood, FL 32752-0775
321-690-1788 (P) 321-690-1789 (F)
FBPE Cert. of Auth. No. 25935

WINDOOR INCORPORATED
7500 AMSTERDAM DRIVE
ORLANDO, FL 32832
Phone: 407.481.8400
Fax: 407.481.0505
www.windoorinc.com

DRAWING TITLE:
SERIES 4000 TWIN SH IMPACT (SMI) WINDOW
ELEVATION AND ANCHOR DETAILS

SIZE	DRAWN BY:	DWG NO.	REV
.	JBH	FEI0012	A
SCALE NTS	DATE: 07/19/11	SHEET 2OF9	

TABLES FOR WINDOWS INSTALLED IN CONCRETE & CMU SUBSTRATES.

TABLES 3A & 3B - WINDOW SIZES WITH LIMITATIONS IN DESIGN PRESSURE DUE TO ANCHORAGE.

Table 3A - Commodity Sized Windows in Concrete & CMU Substrates

Concrete and Filled CMU			Hollow CMU					
Buck Size		DP (psf)	Buck Size		DP (psf)	Buck Size		DP (psf)
BW	BH		BW	BH		BW	BH	
107	72	111	107	72	74	95	72	82
107	71	113	107	71	76	95	71	83
107	25 to 62	120	107	62	88	95	62	97
105 1/4	72	112	107	55 1/4	99	95	55 1/4	110
105 1/4	71	114	107	49 5/8	112	95	25 to 49 5/8	120
105 1/4	25 to 62	120	107	43 3/4	120	73	72	98
95	25 to 72	120	107	37 3/8	120	73	71	100
73	25 to 72	120	107	30 1/2	120	73	62	116
60	25 to 72	120	107	25	120	73	25 to 55 1/4	120
52	25 to 72	120	105 1/4	72	75	60	72	116
37 1/4	25 to 72	120	105 1/4	71	77	60	71	118
			105 1/4	62	89	60	62	120
			105 1/4	55 1/4	101	60	25 to 55 1/4	120
			105 1/4	49 5/8	113	52	25 to 72	120
			105 1/4	43 3/4	120	37 1/4	25 to 72	120
			105 1/4	37 3/8	120			
			105 1/4	30 1/2	120			
			105 1/4	25	120			

Table 3B - Modular Sized Windows in Concrete & CMU Substrates

Concrete and Filled CMU			Hollow CMU					
Buck Size		DP (psf)	Buck Size		DP (psf)	Buck Size		DP (psf)
BW	BH		BW	BH		BW	BH	
96	27 1/2 to 71 1/2	120	96	71 1/2	82	80	71 1/2	95
88	27 1/2 to 71 1/2	120	96	59 1/2	101	80	59 1/2	117
72	27 1/2 to 71 1/2	120	96	51 1/2	118	80	27 1/2 to 51 1/2	120
64	27 1/2 to 71 1/2	120	96	47 1/2	120	72	71 1/2	100
56	27 1/2 to 71 1/2	120	96	43 1/2	120	72	27 1/2 to 59 1/2	120
48	27 1/2 to 71 1/2	120	96	35 1/2	120	64	71 1/2	111
			96	30 1/2	120	64	27 1/2 to 59 1/2	120
			96	27 1/2	*115	56	27 1/2 to 71 1/2	120
			88	71 1/2	88	48	27 1/2 to 71 1/2	120
			88	59 1/2	108			
			88	27 1/2 to 51 1/2	120			

TABLES 4A & 4B - WINDOW SIZES REQUIRING ENHANCED ANCHORAGE AT IMPOST.

Table 4A - Commodity Sized Windows Requiring Enhanced Anchorage at Impost - Detail "B"

Enhanced Anchorage Required?				Enhanced Anchorage Required?			
Buck Size		Concrete & Filled CMU	Hollow CMU	Buck Size		Concrete & Filled CMU	Hollow CMU
BW	BH			BW	BH		
107	72	Yes	Yes	60	72	Yes	Yes
107	71	Yes	Yes	60	71	Yes	Yes
107	62	Yes	Yes	60	62	Yes	Yes
107	55 1/4	Yes	Yes	60	55 1/4	Yes	Yes
107	49 5/8	Yes	Yes	60	49 5/8	No	Yes
107	43 3/4	Yes	Yes	60	43 3/4	No	Yes
107	37 3/8	Yes	Yes	60	37 3/8	No	Yes
107	30 1/2	No	Yes	60	30 1/2	No	No
107	25	No	Yes	60	25	No	No
105 1/4	72	Yes	Yes	52	72	Yes	Yes
105 1/4	71	Yes	Yes	52	71	Yes	Yes
105 1/4	62	Yes	Yes	52	62	Yes	Yes
105 1/4	55 1/4	Yes	Yes	52	55 1/4	No	Yes
105 1/4	49 5/8	Yes	Yes	52	49 5/8	No	Yes
105 1/4	43 3/4	Yes	Yes	52	43 3/4	No	Yes
105 1/4	37 3/8	Yes	Yes	52	37 3/8	No	No
105 1/4	30 1/2	No	Yes	52	30 1/2	No	No
105 1/4	25	No	Yes	52	25	No	No
95	72	Yes	Yes	37.25	72	No	Yes
95	71	Yes	Yes	37.25	71	No	Yes
95	62	Yes	Yes	37.25	62	No	Yes
95	55 1/4	Yes	Yes	37.25	55 1/4	No	Yes
95	49 5/8	Yes	Yes	37.25	49 5/8	No	No
95	43 3/4	Yes	Yes	37.25	43 3/4	No	No
95	37 3/8	No	Yes	37.25	37 3/8	No	No
95	30 1/2	No	Yes	37.25	30 1/2	No	No
95	25	No	No	37.25	25	No	No
73	72	Yes	Yes				
73	71	Yes	Yes				
73	62	Yes	Yes				
73	55 1/4	Yes	Yes				
73	49 5/8	Yes	Yes				
73	43 3/4	No	Yes				
73	37 3/8	No	Yes				
73	30 1/2	No	No				
73	25	No	No				

Table 4B - Modular Sized Windows Requiring Enhanced Anchorage at Impost - Detail "B"

Enhanced Anchorage Required?				Enhanced Anchorage Required?			
Buck Size		Concrete & Filled CMU	Hollow CMU	Buck Size		Concrete & Filled CMU	Hollow CMU
BW	BH			BW	BH		
96	71 1/2	Yes	Yes	64	71 1/2	Yes	Yes
96	59 1/2	Yes	Yes	64	59 1/2	Yes	Yes
96	51 1/2	Yes	Yes	64	51 1/2	Yes	Yes
96	47 1/2	Yes	Yes	64	47 1/2	No	Yes
96	43 1/2	Yes	Yes	64	43 1/2	No	Yes
96	35 1/2	No	Yes	64	35 1/2	No	Yes
96	30 1/2	No	Yes	64	30 1/2	No	No
96	27 1/2	No	No	64	27 1/2	No	No
88	71 1/2	Yes	Yes	56	71 1/2	Yes	Yes
88	59 1/2	Yes	Yes	56	59 1/2	Yes	Yes
88	51 1/2	Yes	Yes	56	51 1/2	No	Yes
88	47 1/2	Yes	Yes	56	47 1/2	No	Yes
88	43 1/2	Yes	Yes	56	43 1/2	No	Yes
88	35 1/2	No	Yes	56	35 1/2	No	No
88	30 1/2	No	Yes	56	30 1/2	No	No
88	27 1/2	No	No	56	27 1/2	No	No
80	71 1/2	Yes	Yes	48	71 1/2	Yes	Yes
80	59 1/2	Yes	Yes	48	59 1/2	No	Yes
80	51 1/2	Yes	Yes	48	51 1/2	No	Yes
80	47 1/2	Yes	Yes	48	47 1/2	No	Yes
80	43 1/2	No	Yes	48	43 1/2	No	No
80	35 1/2	No	Yes	48	35 1/2	No	No
80	30 1/2	No	No	48	30 1/2	No	No
80	27 1/2	No	No	48	27 1/2	No	No
72	71 1/2	Yes	Yes				
72	59 1/2	Yes	Yes				
72	51 1/2	Yes	Yes				
72	47 1/2	Yes	Yes				
72	43 1/2	No	Yes				
72	35 1/2	No	Yes				
72	30 1/2	No	No				
72	27 1/2	No	No				

* SIZES WITH BUCK HEIGHT (BH) LESS THAN 30 1/2" DO NOT HAVE SPACE FOR ENHANCED ANCHORAGE AT THE MEETING RAILS, THEREFORE THE DESIGN PRESSURE (DP) IS LOWER THAN THE NEXT LARGEST WINDOW. AT 30 1/2" BH OR LARGER, WINDOWS ARE FABRICATED AND INSTALLED WITH ENHANCED ANCHORAGE AT MEETING RAILS.

NOTES:

1- FOR EQUAL LEG WINDOWS, BUCK DIMENSIONS ARE THE SAME AS WINDOW DIMENSIONS.
2- FOR FLANGE WINDOWS, BUCK DIMENSIONS ARE 1" LESS THAN WINDOW DIMENSIONS.
3- BW: BUCK WIDTH, BH: BUCK HEIGHT
4- DP: DESIGN PRESSURE
5- CMU: CONCRETE MASONRY UNIT

PRODUCT REVISED
as complying with the Florida
Building Code
Acceptance No 12-0320.18
Expiration Date Nov. 4, 2015
By Manuel Perez
Miami-Dade Product Control

REVISIONS

SHEET	REV	DESCRIPTION	DATE	BY
.	0	ORIGINAL ISSUE	07/19/11	RJA
.	A	UPDATE TO 2010 FBC	02/14/12	JBH

This drawing and all associated component files are the sole property of WinDoor, Inc. and contains confidential, privileged and patented information. Any reproduction of this drawing is not permitted without written approval from WinDoor, Inc. management.

Robert J. Amoruso, P.E.
FL License No. 49752

ROBERT JAMES AMORUSO LICENSE No 49752 STATE OF FLORIDA PROFESSIONAL ENGINEER 3/8/12

PTC Product Design Group, LLC
PO Box 520775
Longwood, FL 32752-0775
321-690-1788 (P) 321-690-1789 (F)
FBPE Cert. of Auth. No. 25935

WINDOOR INCORPORATED
7500 AMSTERDAM DRIVE
ORLANDO, FL 32832
Phone: 407.481.8400
Fax: 407.481.0505
www.windoorinc.com

DRAWING TITLE:
SERIES 4000 TWIN SH IMPACT (SMI) WINDOW
ANCHOR LIMITS IN CONCRETE AND CMU SUBSTRATES

SIZE	DRAWN BY:	DWG NO.	REV
	JBH	FEI0012	A
SCALE NTS	DATE: 07/19/11	SHEET 3OF9	

TABLES FOR WINDOWS INSTALLED IN WOOD SUBSTRATES.

TABLES 3C & 3D - WINDOW SIZES WITH LIMITATIONS IN DESIGN PRESSURE DUE TO ANCHORAGE.

Table 3C - Commodity Sized Windows in Wood Substrates

Buck Size BW	Buck Size BH	DP (psf)	Buck Size BW	Buck Size BH	DP (psf)
107	72	55	60	72	86
107	71	56	60	71	87
107	62	65	60	62	101
107	55 1/4	74	60	55 1/4	115
107	49 5/8	83	60	49 5/8	120
107	43 3/4	94	60	43 3/4	120
107	37 3/8	112	60	37 3/8	120
107	30 1/2	120	60	30 1/2	120
107	25	* 85	60	25	120
105 1/4	72	56	52	72	98
105 1/4	71	57	52	71	99
105 1/4	62	66	52	62	115
105 1/4	55 1/4	75	52	55 1/4	120
105 1/4	49 5/8	84	52	49 5/8	120
105 1/4	43 3/4	96	52	43 3/4	120
105 1/4	37 3/8	113	52	37 3/8	120
105 1/4	30 1/2	120	52	30 1/2	120
105 1/4	25	* 87	52	25	120
95	72	61	37.25	72	120
95	71	62	37.25	71	120
95	62	72	37.25	62	120
95	55 1/4	81	37.25	55 1/4	120
95	49 5/8	91	37.25	49 5/8	120
95	43 3/4	105	37.25	43 3/4	120
95	37 3/8	120	37.25	37 3/8	120
95	30 1/2	120	37.25	30 1/2	120
95	25	* 96	37.25	25	120
73	72	73			
73	71	74			
73	62	85			
73	55 1/4	97			
73	49 5/8	108			
73	43 3/4	120			
73	37 3/8	120			
73	30 1/2	120			
73	25	120			

Table 3D - Modular Sized Windows in Wood Substrates

Buck Size BW	Buck Size BH	DP (psf)	Buck Size BW	Buck Size BH	DP (psf)
96	71 1/2	61	72	71 1/2	74
96	59 1/2	74	72	59 1/2	90
96	51 1/2	87	72	51 1/2	105
96	47 1/2	95	72	47 1/2	115
96	43 1/2	100	72	43 1/2	120
96	35 1/2	120	72	35 1/2	120
96	30 1/2	120	72	30 1/2	120
96	27 1/2	* 87	72	27 1/2	* 117
88	71 1/2	65	64	71 1/2	82
88	59 1/2	80	64	59 1/2	100
88	51 1/2	94	64	51 1/2	117
88	47 1/2	102	64	47 1/2	120
88	43 1/2	112	64	43 1/2	120
88	35 1/2	120	64	35 1/2	111
88	30 1/2	120	64	30 1/2	120
88	27 1/2	* 95	64	27 1/2	120
80	71 1/2	70	56	71 1/2	92
80	59 1/2	86	56	59 1/2	112
80	51 1/2	101	56	51 1/2	120
80	47 1/2	111	56	47 1/2	120
80	43 1/2	120	56	43 1/2	120
80	35 1/2	120	56	35 1/2	120
80	30 1/2	120	56	30 1/2	120
80	27 1/2	* 105	56	27 1/2	120

TABLES 4C & 4D - WINDOW SIZES REQUIRING ENHANCED ANCHORAGE AT IMPOST.

Table 4C - Commodity Sized Windows Requiring Enhanced Anchorage at Impost - Detail "B"

Enhanced Anchorage Required?					
Buck Size BW	Buck Size BH	No. 14 WS	Buck Size BW	Buck Size BH	No. 14 WS
107	72	Yes	60	72	Yes
107	71	Yes	60	71	Yes
107	62	Yes	60	62	Yes
107	55 1/4	Yes	60	55 1/4	Yes
107	49 5/8	Yes	60	49 5/8	Yes
107	43 3/4	Yes	60	43 3/4	Yes
107	37 3/8	Yes	60	37 3/8	Yes
107	30 1/2	Yes	60	30 1/2	Yes
107	25	Yes	60	25	No
105 1/4	72	Yes	52	72	Yes
105 1/4	71	Yes	52	71	Yes
105 1/4	62	Yes	52	62	Yes
105 1/4	55 1/4	Yes	52	55 1/4	Yes
105 1/4	49 5/8	Yes	52	49 5/8	Yes
105 1/4	43 3/4	Yes	52	43 3/4	Yes
105 1/4	37 3/8	Yes	52	37 3/8	Yes
105 1/4	30 1/2	Yes	52	30 1/2	No
105 1/4	25	Yes	52	25	No
95	72	Yes	37.25	72	Yes
95	71	Yes	37.25	71	Yes
95	62	Yes	37.25	62	Yes
95	55 1/4	Yes	37.25	55 1/4	Yes
95	49 5/8	Yes	37.25	49 5/8	Yes
95	43 3/4	Yes	37.25	43 3/4	Yes
95	37 3/8	Yes	37.25	37 3/8	No
95	30 1/2	Yes	37.25	30 1/2	No
95	25	Yes	37.25	25	No
73	72	Yes			
73	71	Yes			
73	62	Yes			
73	55 1/4	Yes			
73	49 5/8	Yes			
73	43 3/4	Yes			
73	37 3/8	Yes			
73	30 1/2	Yes			
73	25	Yes			

Table 4D - Commodity Sized Windows Requiring Enhanced Anchorage at Impost - Detail "B"

Enhanced Anchorage Required?					
Buck Size BW	Buck Size BH	No. 14 WS	Buck Size BW	Buck Size BH	No. 14 WS
96	71 1/2	Yes	64	71 1/2	Yes
96	59 1/2	Yes	64	59 1/2	Yes
96	51 1/2	Yes	64	51 1/2	Yes
96	47 1/2	Yes	64	47 1/2	Yes
96	43 1/2	Yes	64	43 1/2	Yes
96	35 1/2	Yes	64	35 1/2	Yes
96	30 1/2	Yes	64	30 1/2	Yes
96	27 1/2	Yes	64	27 1/2	Yes
88	71 1/2	Yes	56	71 1/2	Yes
88	59 1/2	Yes	56	59 1/2	Yes
88	51 1/2	Yes	56	51 1/2	Yes
88	47 1/2	Yes	56	47 1/2	Yes
88	43 1/2	Yes	56	43 1/2	Yes
88	35 1/2	Yes	56	35 1/2	Yes
88	30 1/2	Yes	56	30 1/2	Yes
88	27 1/2	Yes	56	27 1/2	No
80	71 1/2	Yes	48	71 1/2	Yes
80	59 1/2	Yes	48	59 1/2	Yes
80	51 1/2	Yes	48	51 1/2	Yes
80	47 1/2	Yes	48	47 1/2	Yes
80	43 1/2	Yes	48	43 1/2	Yes
80	35 1/2	Yes	48	35 1/2	Yes
80	30 1/2	Yes	48	30 1/2	No
80	27 1/2	Yes	48	27 1/2	No
72	71 1/2	Yes			
72	59 1/2	Yes			
72	51 1/2	Yes			
72	47 1/2	Yes			
72	43 1/2	Yes			
72	35 1/2	Yes			
72	30 1/2	Yes			
72	27 1/2	Yes			

* SIZES WITH BUCK HEIGHT (BH) LESS THAN 30 1/2" DO NOT HAVE SPACE FOR ENHANCED ANCHORAGE AT THE MEETING RAILS, THEREFORE THE DESIGN PRESSURE (DP) IS LOWER THAN THE NEXT LARGEST WINDOW. AT 30 1/2" BH OR LARGER, WINDOWS ARE FABRICATED AND INSTALLED WITH ENHANCED ANCHORAGE AT MEETING RAILS.

NOTES:

1- FOR EQUAL LEG WINDOWS, BUCK DIMENSIONS ARE THE SAME AS WINDOW DIMENSIONS.
2- FOR FLANGE WINDOWS, BUCK DIMENSIONS ARE 1" LESS THAN WINDOW DIMENSIONS.
3- BW: BUCK WIDTH, BH: BUCK HEIGHT
4- DP: DESIGN PRESSURE
5- CMU: CONCRETE MASONRY UNIT

PRODUCT REVISED
as complying with the Florida Building Code
Acceptance No 12-0320.18
Expiration Date Nov. 4, 2015
By Manuel Perez
Miami-Dade Product Control

REVISIONS

SHEET	REV	DESCRIPTION	DATE	BY
.	0	ORIGINAL ISSUE	07/19/11	RJA
.	A	UPDATE TO 2010 FBC	02/14/12	JBH

This drawing and all associated component files are the sole property of WinDoor, Inc. and contains confidential, privileged and patented information. Any reproduction of this drawing is not permitted without written approval from WinDoor, Inc. management.

Robert J. Amoruso, P.E.
FL License No. 49752

ROBERT JAMES AMORUSO LICENSE No 49752 STATE OF FLORIDA PROFESSIONAL ENGINEER
3/13/12

PTC Product Design Group, LLC
PO Box 520775
Longwood, FL 32752-0775
321-690-1788 (P) 321-690-1789 (F)
FBPE Cert. of Auth. No. 25935

WINDOOR INCORPORATED
7500 AMSTERDAM DRIVE
ORLANDO, FL 32832
Phone: 407.481.8400
Fax: 407.481.0505
www.windoorinc.com

DRAWING TITLE:
SERIES 4000 TWIN SH IMPACT (SMI) WINDOW
ANCHOR LIMITS IN WOOD SUBSTRATES

SIZE	DRAWN BY:	DWG NO.	REV
.	JBH	FEI0012	A

SCALE	DATE:	SHEET
NTS	07/19/11	4OF9

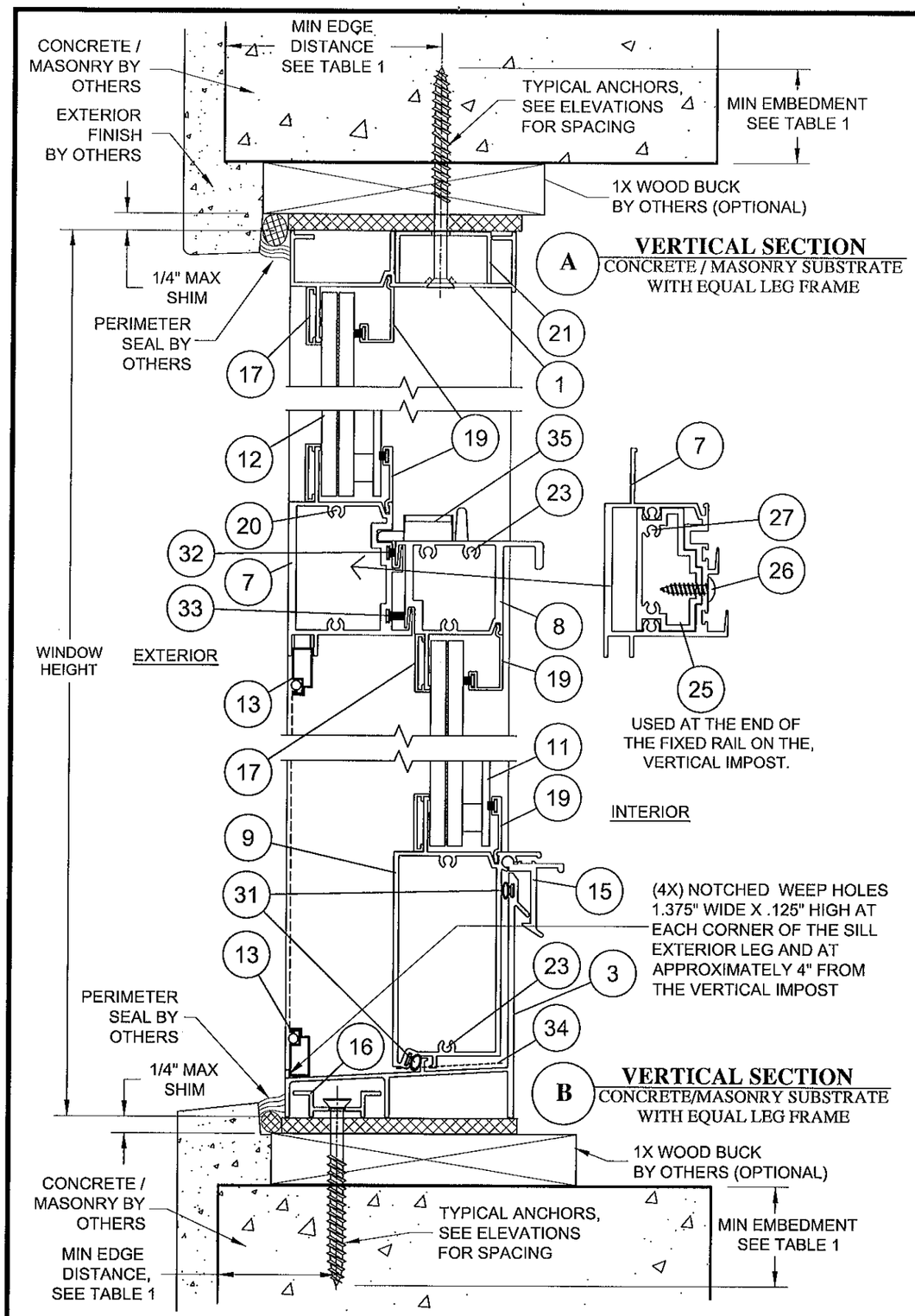

A VERTICAL SECTION
CONCRETE / MASONRY SUBSTRATE WITH EQUAL LEG FRAME

B VERTICAL SECTION
CONCRETE/MASONRY SUBSTRATE WITH EQUAL LEG FRAME

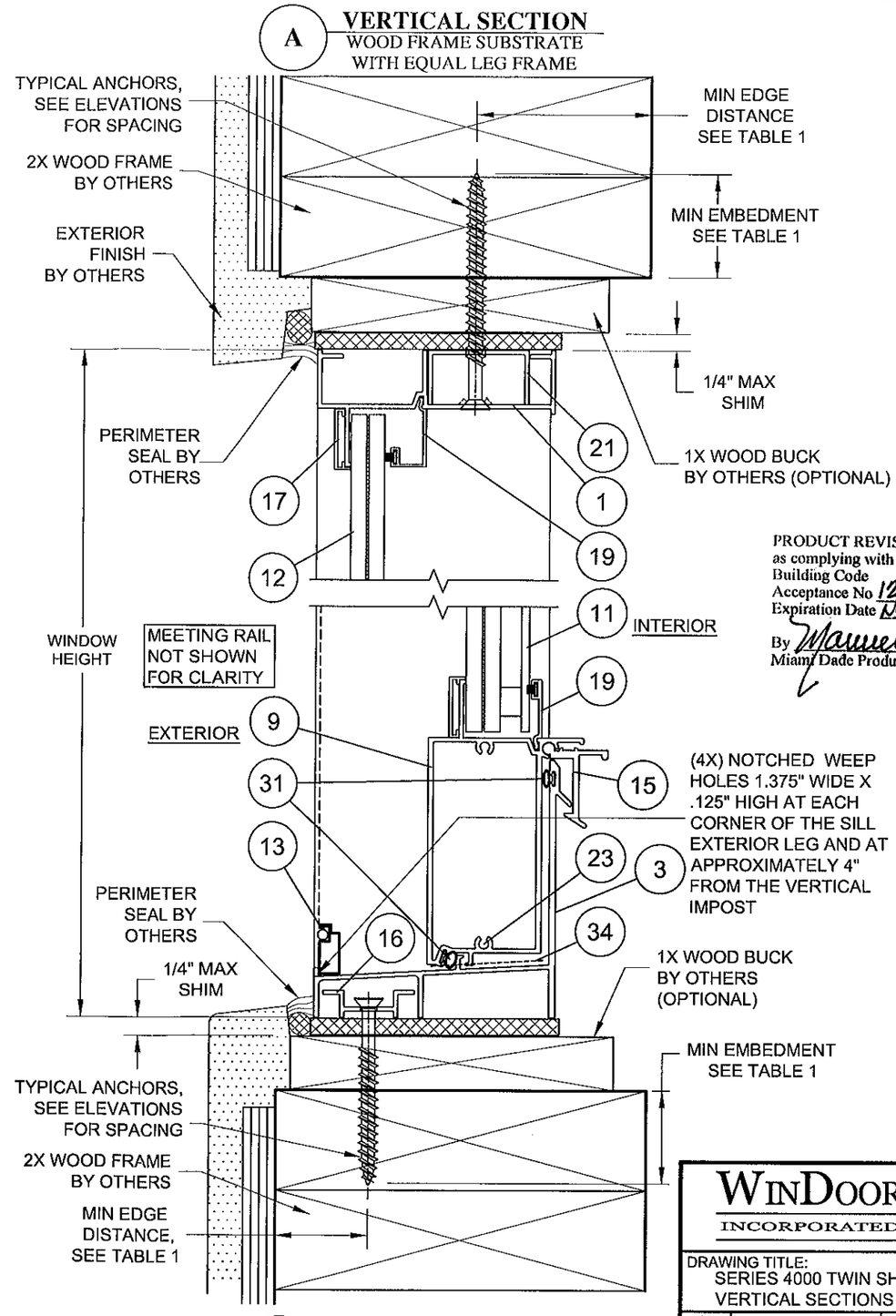

A VERTICAL SECTION
WOOD FRAME SUBSTRATE WITH EQUAL LEG FRAME

B VERTICAL SECTION
WOOD FRAME SUBSTRATE WITH EQUAL LEG FRAME

PRODUCT REVISED
as complying with the Florida Building Code
Acceptance No 12-0320.18
Expiration Date Nov. 4, 2015
By Manuel Perez
Miami Dade Product Control

SHEET	REV	DESCRIPTION	DATE	BY
.	0	ORIGINAL ISSUE	07/19/11	RJA
.	A	UPDATE TO 2010 FBC	02/14/12	JBH

REVISIONS

This drawing and all associated component files are the sole property of WinDoor, Inc. and contains confidential, privileged and patented information. Any reproduction of this drawing is not permitted without written approval from WinDoor, Inc. management.

Robert J. Amoruso, P.E.
FL License No. 49752

ROBERT JAMES AMORUSO LICENSE No 49752 STATE OF FLORIDA PROFESSIONAL ENGINEER 3/13/12

PTC Product Design Group, LLC
PO Box 520775
Longwood, FL 32752-0775
321-690-1788 (P) 321-690-1789 (F)
FBPE Cert. of Auth. No. 25935

WINDOOR INCORPORATED
7500 AMSTERDAM DRIVE
ORLANDO, FL 32832
Phone: 407.481.8400
Fax: 407.481.0505
www.windoorinc.com

DRAWING TITLE:
SERIES 4000 TWIN SH IMPACT (SMI) WINDOW
VERTICAL SECTIONS A AND B

SIZE	DRAWN BY:	DWG NO.	REV
.	JBH	FEI0012	A
SCALE NTS	DATE: 07/19/11	SHEET 5OF9	

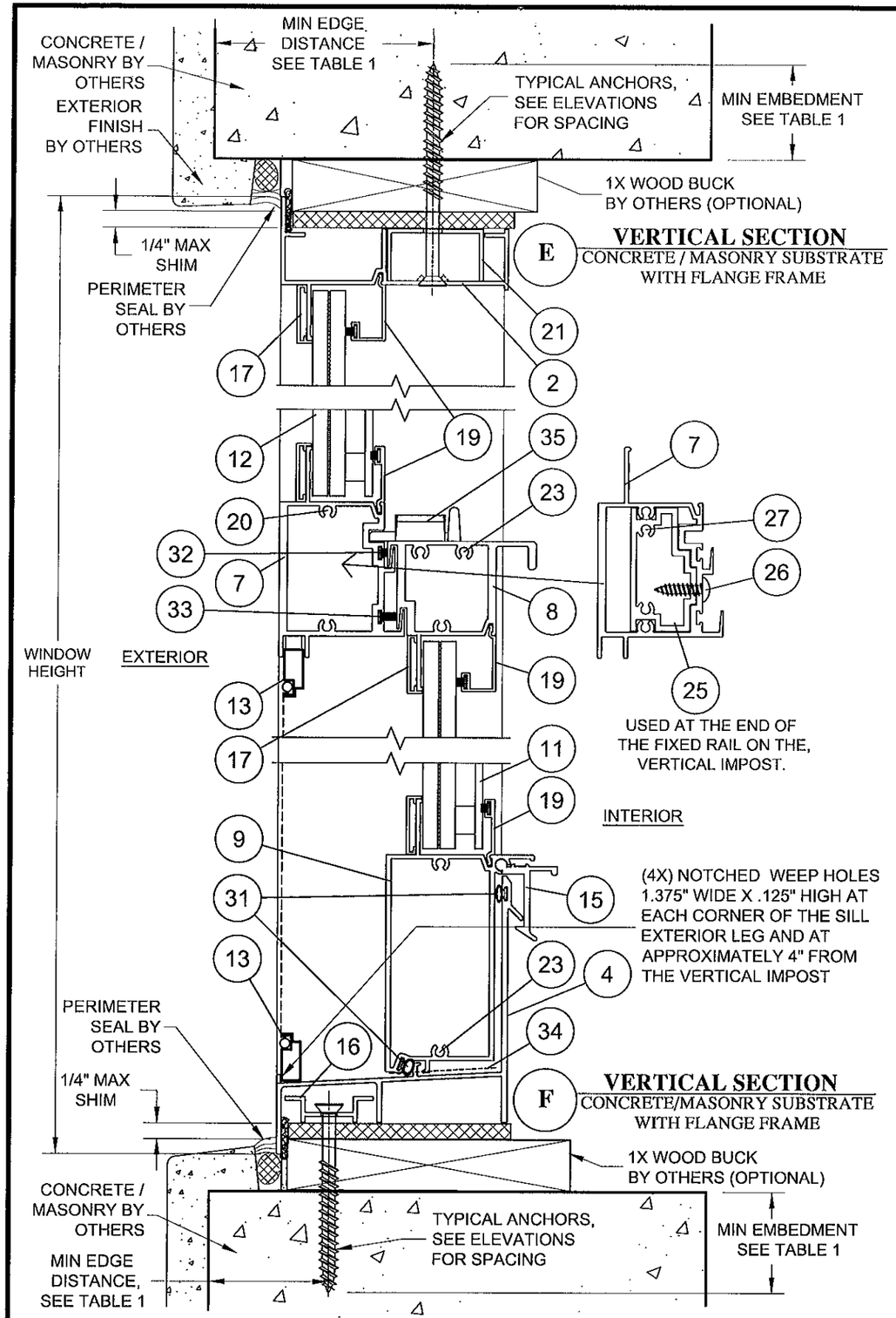

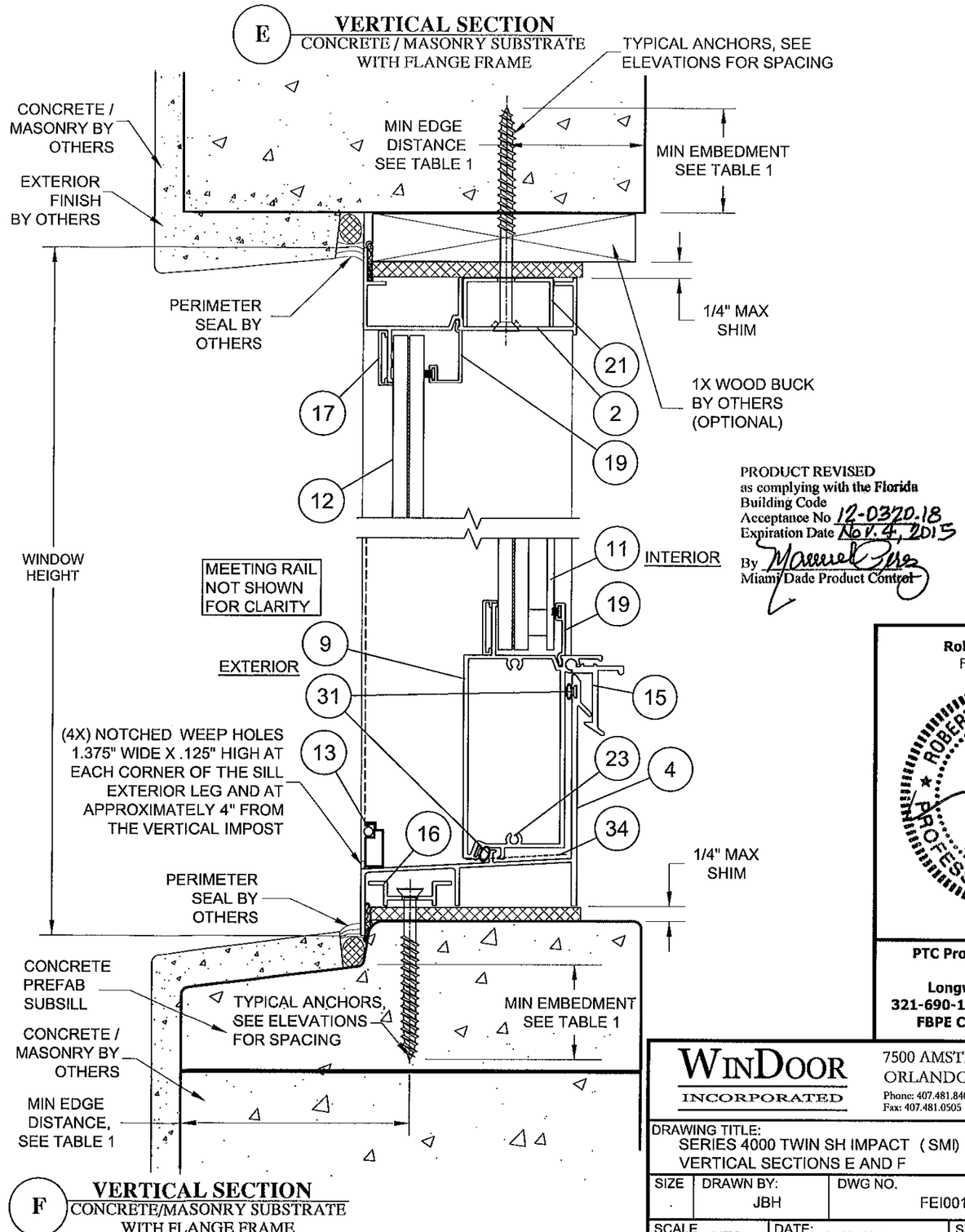

PRODUCT REVISED
as complying with the Florida Building Code
Acceptance No 12-0320.18
Expiration Date Nov. 4, 2015
By Manuel Pérez
Miami Dade Product Control

REVISIONS			
SHEET	REV	DESCRIPTION	DATE	BY
.	0	ORIGINAL ISSUE	07/19/11	RJA
.	A	UPDATE TO 2010 FBC	02/14/12	JBH

This drawing and all associated component files are the sole property of WinDoor, Inc. and contains confidential, privileged and patented information. Any reproduction of this drawing is not permitted without written approval from WinDoor, Inc. management.

Robert J. Amoruso, P.E.
FL License No. 49752

ROBERT JAMES AMORUSO LICENSE No 49752 STATE OF FLORIDA PROFESSIONAL ENGINEER 3/13/12

PTC Product Design Group, LLC
PO Box 520775
Longwood, FL 32752-0775
321-690-1788 (P) 321-690-1789 (F)
FBPE Cert. of Auth. No. 25935

WINDOOR INCORPORATED
7500 AMSTERDAM DRIVE
ORLANDO, FL 32832
Phone: 407.481.8400
Fax: 407.481.0505
www.windoorinc.com

DRAWING TITLE:
SERIES 4000 TWIN SH IMPACT (SMI) WINDOW
VERTICAL SECTIONS E AND F

SIZE	DRAWN BY:	DWG NO.	REV
.	JBH	FEI0012	A
SCALE NTS	DATE: 07/19/11	SHEET 6OF9	

E VERTICAL SECTION
WOOD FRAME SUBSTRATE WITH FLANGE FRAME

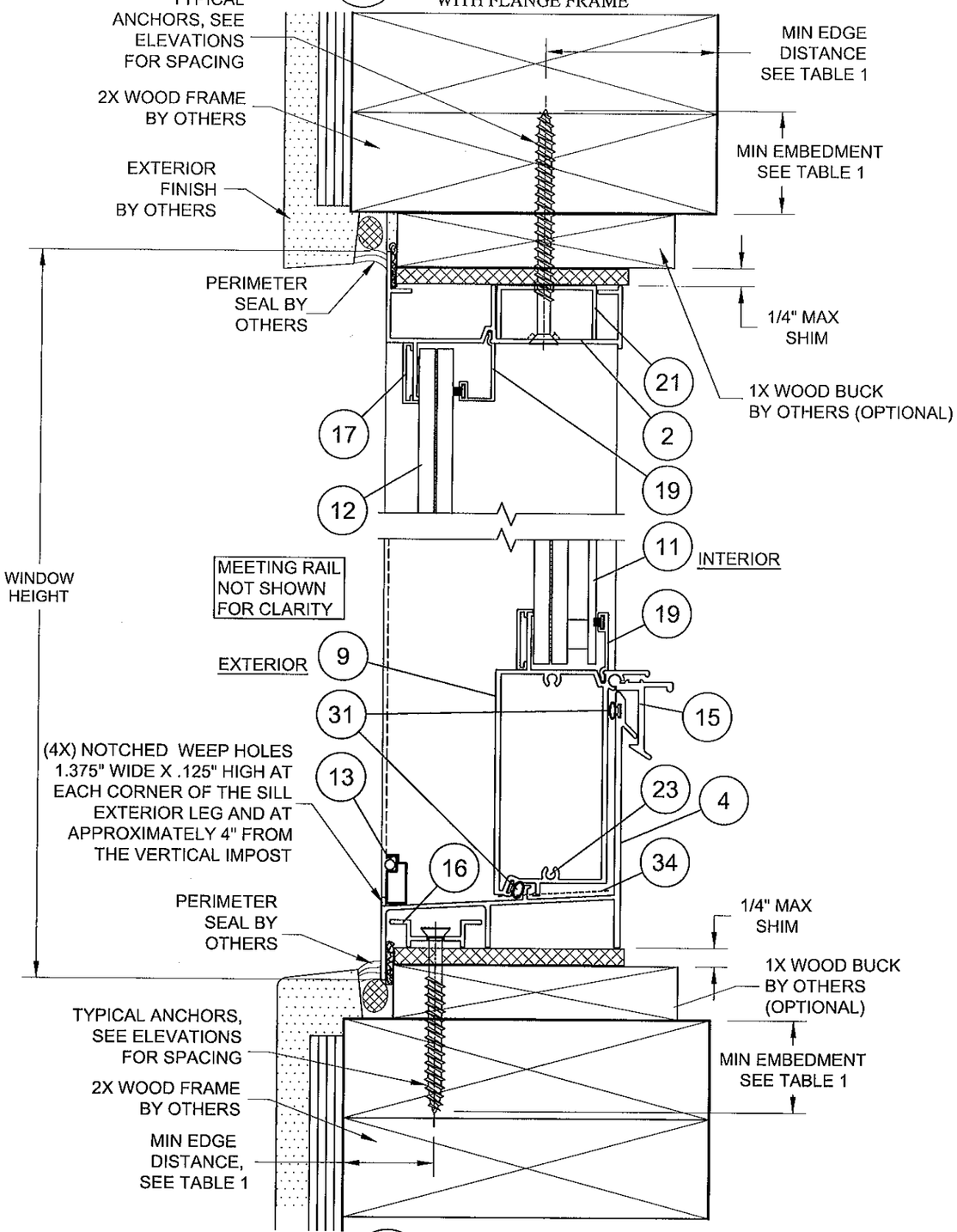

F VERTICAL SECTION
WOOD FRAME SUBSTRATE WITH FLANGE FRAME

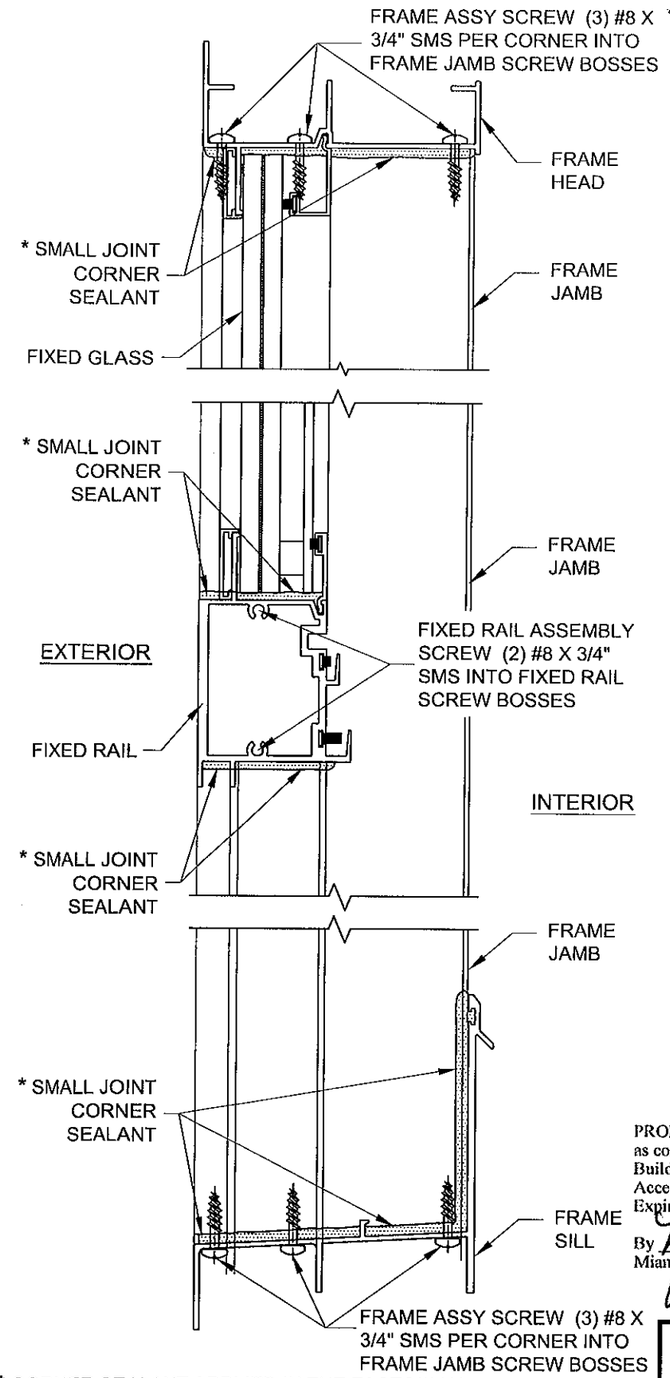

* CORNER SEALANT APPLIED IN THE FACTORY IS INSTALLED ON THE EXTERIOR SURFACE OF THE FRAME JOINTS. AFTER WINDOW INSTALLATION THE SEALANT MAY NOT BE VISIBLE.

FLANGE FRAME CORNER DETAIL
SIMILAR FOR EQUAL LEG FRAME.
SIMILAR FOR VERTICAL IMPOST EXCEPT SIX (6) #8 X 3/4" SMS REQUIRED AT EACH END AND SMALL JOINT CORNER SEALANT NOT REQUIRED.

PRODUCT REVISED
as complying with the Florida Building Code
Acceptance No 12-0320.18
Expiration Date Nov. 4, 2015
By Manuel Perez
Miami-Dade Product Control

REVISIONS

SHEET	REV	DESCRIPTION	DATE	BY
.	0	ORIGINAL ISSUE	07/19/11	RJA
.	A	UPDATE TO 2010 FBC	02/14/12	JBH

This drawing and all associated component files are the sole property of WinDoor, Inc. and contains confidential, privileged and patented information. Any reproduction of this drawing is not permitted without written approval from WinDoor, Inc. management.

Robert J. Amoruso, P.E.
FL License No. 49752

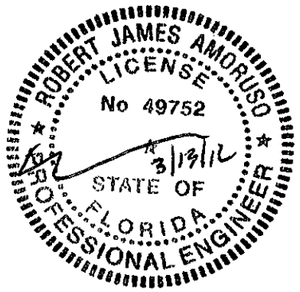

PTC Product Design Group, LLC
PO Box 520775
Longwood, FL 32752-0775
321-690-1788 (P) 321-690-1789 (F)
FBPE Cert. of Auth. No. 25935

WINDOOR INCORPORATED
7500 AMSTERDAM DRIVE
ORLANDO, FL 32832
Phone: 407.481.8400
Fax: 407.481.0505
www.windoorinc.com

DRAWING TITLE:
SERIES 4000 TWIN SH IMPACT (SMI) WINDOW
VERTICAL SECTIONS E & F AND CORNER DETAILS

SIZE	DRAWN BY:	DWG NO.	REV
.	JBH	FEI0012	A
SCALE NTS	DATE: 07/19/11	SHEET 7OF9	

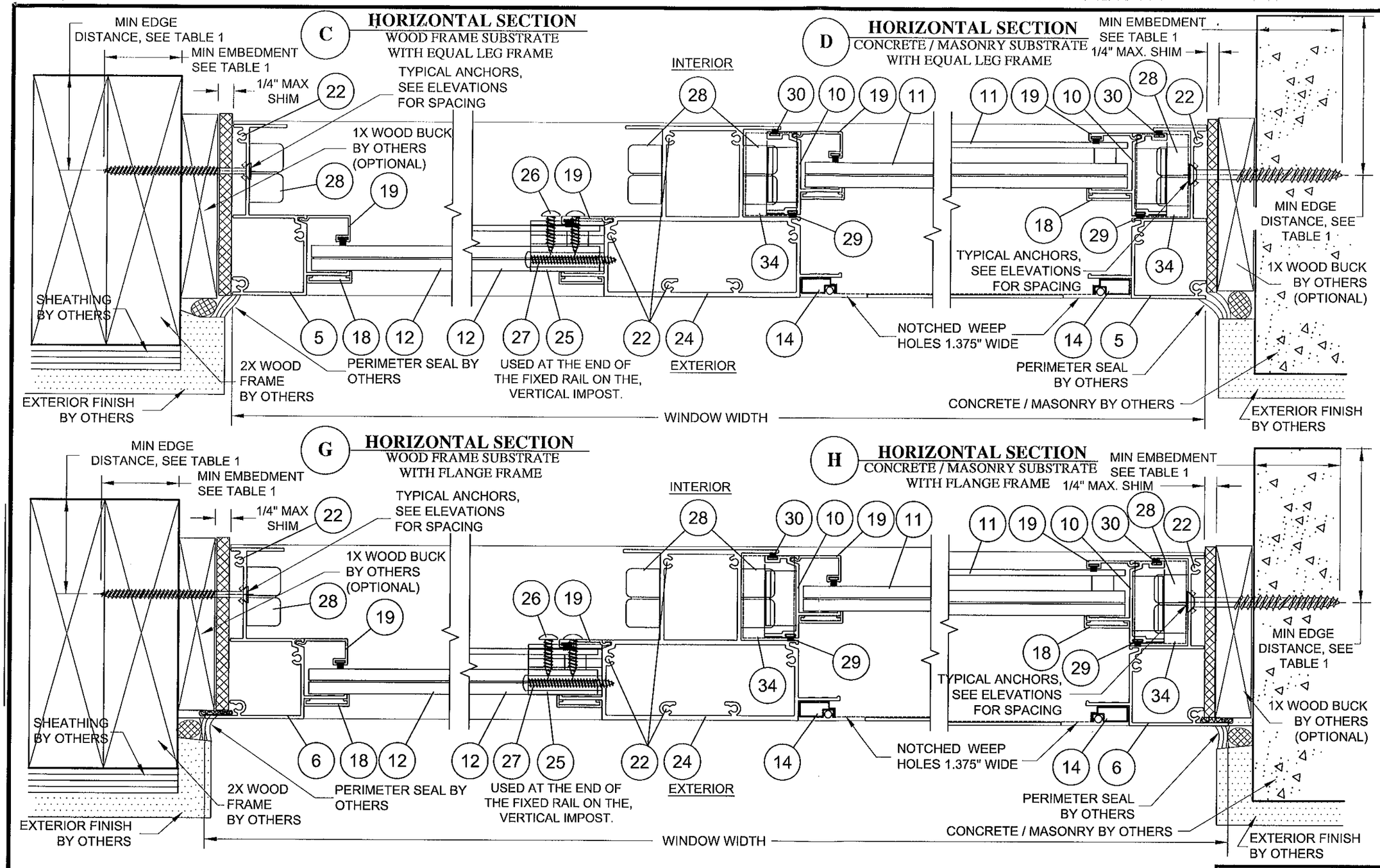

REVISIONS			
SHEET	REV	DESCRIPTION	DATE	BY
.	0	ORIGINAL ISSUE	07/19/11	RJA
.	A	UPDATE TO 2010 FBC	02/14/12	JBH

This drawing and all associated component files are the sole property of WinDoor, Inc. and contains confidential, privileged and patented information. Any reproduction of this drawing is not permitted without written approval from WinDoor, Inc. management.

Robert J. Amoruso, P.E.
FL License No. 49752

ROBERT JAMES AMORUSO
LICENSE
No 49752
3/13/12
STATE OF FLORIDA
PROFESSIONAL ENGINEER

PTC Product Design Group, LLC
PO Box 520775
Longwood, FL 32752-0775
321-690-1788 (P) 321-690-1789 (F)
FBPE Cert. of Auth. No. 25935

PRODUCT REVISED
as complying with the Florida Building Code
Acceptance No 12-0320.18
Expiration Date Nov. 4, 2015
By Manuel Perez
Miami Dade Product Control

WINDOOR INCORPORATED
7500 AMSTERDAM DRIVE
ORLANDO, FL 32832
Phone: 407.481.8400
Fax: 407.481.0505
www.windoorinc.com

DRAWING TITLE:
SERIES 4000 TWIN SH IMPACT (SMI) WINDOW
HORIZONTAL SECTIONS C, D, G AND H

SIZE	DRAWN BY:	DWG NO.	REV
.	JBH	FEI0012	A
SCALE NTS	DATE: 07/19/11	SHEET 8OF9	

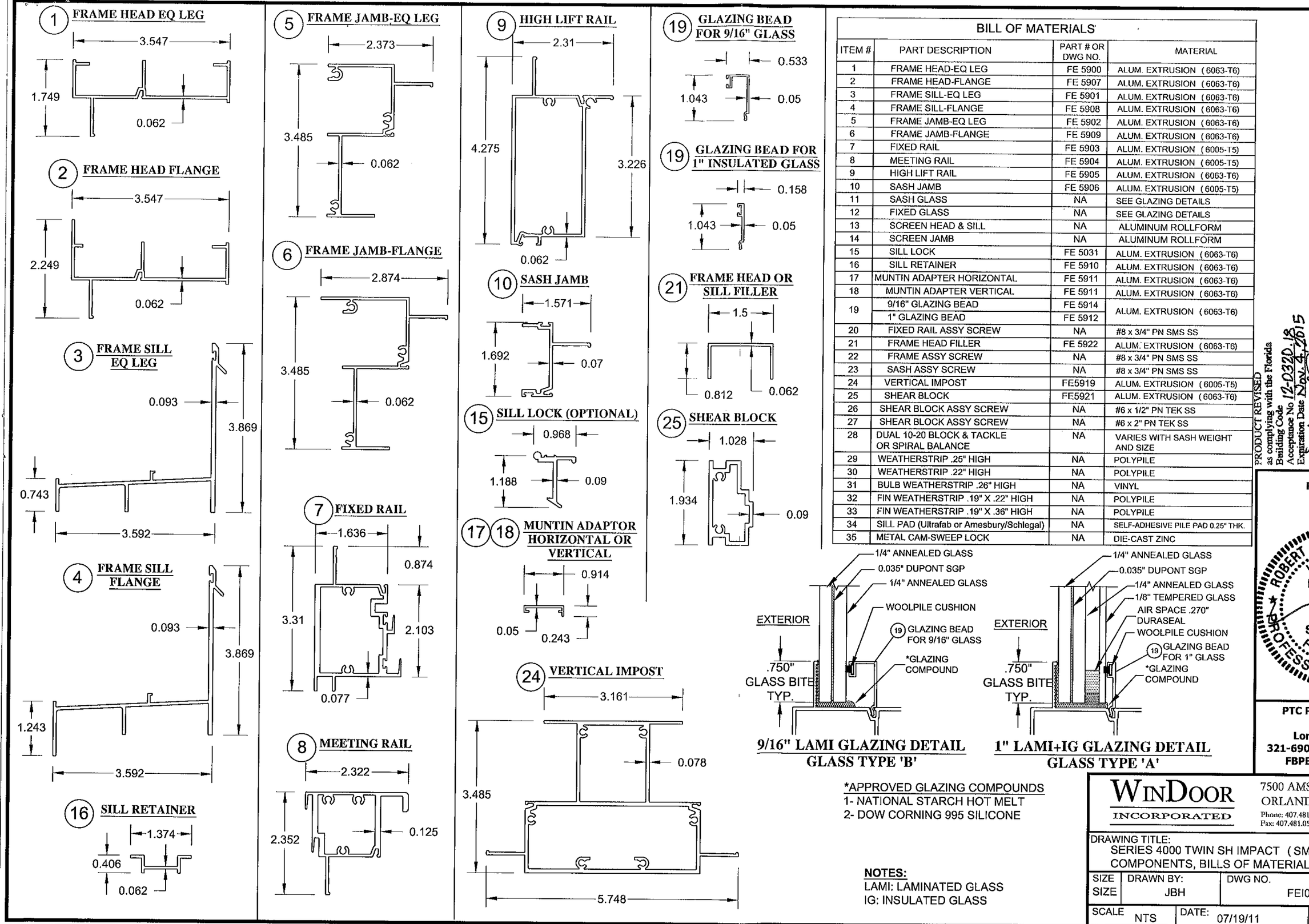

BILL OF MATERIALS

ITEM #	PART DESCRIPTION	PART # OR DWG NO.	MATERIAL
1	FRAME HEAD-EQ LEG	FE 5900	ALUM. EXTRUSION (6063-T6)
2	FRAME HEAD-FLANGE	FE 5907	ALUM. EXTRUSION (6063-T6)
3	FRAME SILL-EQ LEG	FE 5901	ALUM. EXTRUSION (6063-T6)
4	FRAME SILL-FLANGE	FE 5908	ALUM. EXTRUSION (6063-T6)
5	FRAME JAMB-EQ LEG	FE 5902	ALUM. EXTRUSION (6063-T6)
6	FRAME JAMB-FLANGE	FE 5909	ALUM. EXTRUSION (6063-T6)
7	FIXED RAIL	FE 5903	ALUM. EXTRUSION (6005-T5)
8	MEETING RAIL	FE 5904	ALUM. EXTRUSION (6005-T5)
9	HIGH LIFT RAIL	FE 5905	ALUM. EXTRUSION (6063-T6)
10	SASH JAMB	FE 5906	ALUM. EXTRUSION (6005-T5)
11	SASH GLASS	NA	SEE GLAZING DETAILS
12	FIXED GLASS	NA	SEE GLAZING DETAILS
13	SCREEN HEAD & SILL	NA	ALUMINUM ROLLFORM
14	SCREEN JAMB	NA	ALUMINUM ROLLFORM
15	SILL LOCK	FE 5031	ALUM. EXTRUSION (6063-T6)
16	SILL RETAINER	FE 5910	ALUM. EXTRUSION (6063-T6)
17	MUNTIN ADAPTER HORIZONTAL	FE 5911	ALUM. EXTRUSION (6063-T6)
18	MUNTIN ADAPTER VERTICAL	FE 5911	ALUM. EXTRUSION (6063-T6)
19	9/16" GLAZING BEAD	FE 5914	ALUM. EXTRUSION (6063-T6)
	1" GLAZING BEAD	FE 5912	
20	FIXED RAIL ASSY SCREW	NA	#8 x 3/4" PN SMS SS
21	FRAME HEAD FILLER	FE 5922	ALUM. EXTRUSION (6063-T6)
22	FRAME ASSY SCREW	NA	#8 x 3/4" PN SMS SS
23	SASH ASSY SCREW	NA	#8 x 3/4" PN SMS SS
24	VERTICAL IMPOST	FE5919	ALUM. EXTRUSION (6005-T5)
25	SHEAR BLOCK	FE5921	ALUM. EXTRUSION (6063-T6)
26	SHEAR BLOCK ASSY SCREW	NA	#6 x 1/2" PN TEK SS
27	SHEAR BLOCK ASSY SCREW	NA	#6 x 2" PN TEK SS
28	DUAL 10-20 BLOCK & TACKLE OR SPIRAL BALANCE	NA	VARIES WITH SASH WEIGHT AND SIZE
29	WEATHERSTRIP .25" HIGH	NA	POLYPILE
30	WEATHERSTRIP .22" HIGH	NA	POLYPILE
31	BULB WEATHERSTRIP .26" HIGH	NA	VINYL
32	FIN WEATHERSTRIP .19" X .22" HIGH	NA	POLYPILE
33	FIN WEATHERSTRIP .19" X .36" HIGH	NA	POLYPILE
34	SILL PAD (Ultrafab or Amesbury/Schlegal)	NA	SELF-ADHESIVE PILE PAD 0.25" THK.
35	METAL CAM-SWEEP LOCK	NA	DIE-CAST ZINC

*APPROVED GLAZING COMPOUNDS
1- NATIONAL STARCH HOT MELT
2- DOW CORNING 995 SILICONE

NOTES:
LAMI: LAMINATED GLASS
IG: INSULATED GLASS

PRODUCT REVISED as complying with the Florida Building Code
Acceptance No 12-0320.18
Expiration Date Nov 4, 2015
By Miami-Dade Product Control

REVISIONS			
SHEET	REV	DESCRIPTION	DATE	BY
.	0	ORIGINAL ISSUE	07/19/11	RJA
.	A	UPDATE TO 2010 FBC	02/14/12	JBH

This drawing and all associated component files are the sole property of WinDoor, Inc. and contains confidential, privileged and patented information. Any reproduction of this drawing is not permitted without written approval from WinDoor, Inc. management.

Robert J. Amoruso, P.E.
FL License No. 49752
ROBERT JAMES AMORUSO LICENSE No 49752 STATE OF FLORIDA PROFESSIONAL ENGINEER
3/17/12

PTC Product Design Group, LLC
PO Box 520775
Longwood, FL 32752-0775
321-690-1788 (P) 321-690-1789 (F)
FBPE Cert. of Auth. No. 25935

WINDOOR INCORPORATED
7500 AMSTERDAM DRIVE
ORLANDO, FL 32832
Phone: 407.481.8400
Fax: 407.481.0505
www.windoorinc.com

DRAWING TITLE:
SERIES 4000 TWIN SH IMPACT (SMI) WINDOW
COMPONENTS, BILLS OF MATERIAL AND GLAZING DETAILS

SIZE	DRAWN BY:	DWG NO.	REV
SIZE	JBH	FEI0012	A
SCALE NTS	DATE: 07/19/11	SHEET 9OF9	