MIAMI-DADE COUNTY
DEPARTMENT OF PERMITTING, ENVIRONMENT, AND REGULATORY AFFAIRS (PERA)
BOARD AND CODE ADMINISTRATION DIVISION

NOTICE OF ACCEPTANCE (NOA)

MIAMI-DADE COUNTY
PRODUCT CONTROL SECTION
11805 SW 26 Street, Room 208
Miami, Florida 33175-2474
T (786) 315-2590 F (786) 315-2599
www.miamidade.gov/pera/

Black Mountain Door, LLC
310 Flint Drive,
MT. Sterling, KY. 40353

SCOPE:

This NOA is being issued under the applicable rules and regulations governing the use of construction materials. The documentation submitted has been reviewed and accepted by Miami-Dade County PERA -Product Control Section to be used in Miami Dade County and other areas where allowed by the Authority Having Jurisdiction (AHJ).

This NOA shall not be valid after the expiration date stated below. The Miami-Dade County Product Control Section (In Miami Dade County) and/or the AHJ (in areas other than Miami Dade County) reserve the right to have this product or material tested for quality assurance purposes. If this product or material fails to perform in the accepted manner, the manufacturer will incur the expense of such testing and the AHJ may immediately revoke, modify, or suspend the use of such product or material within their jurisdiction. PERA reserves the right to revoke this acceptance, if it is determined by Miami-Dade County Product Control Section that this product or material fails to meet the requirements of the applicable building code.

This product is approved as described herein, and has been designed to comply with the Florida Building Code, including the High Velocity Hurricane Zone.

DESCRIPTION:Firedoor Series "6070" Outswing glazed Storefront Steel Door w/wo Transom(Steel Reinf)

APPROVAL DOCUMENT: Drawing No **W02-52 Rev I**, titled "Firedoor series "6070 HMD-IG" STEEL. ENT. DR.", sheet 1 through 9 of 9, dated 05-23-02 and last revised on MAR 22, 2012, prepared by Al-Farooq Corporation, signed and sealed by Javad Ahmad, P. E., bearing the Miami-Dade County Product Control Revision stamp with the Notice of Acceptance number and approval date by the Miami-Dade County Product Control Section.

MISSILE IMPACT RATING: Large and Small Missile Impact Resistant

Limitations:

1. This approval is limited to outswing Single or Double doors w/wo Reinforced Transom. When Door used with Transom, lower design Pressure of Doors or Transom Shall control.
2. When used with Black Mountain Door, LLC's Steel Reinforced Storefront System (under Separate approval). Lower design pressure of Door or Storefront shall control.
3. Doors w/ Zero Int'l. threshold **65-A** (item **#10**) is not rated for water infiltration resistance.
4. Max Transom not to exceed by frame width =76" & 36" high.
5. Glass lite wider than 36" shall be supported with approved setting blocks per FBC requirements.

LABELING: Each unit shall bear a permanent label with the manufacturer's name or logo, city, state and series and following statement: "Miami-Dade County Product Control Approved", noted herein.

RENEWAL of this NOA shall be considered after a renewal application has been filed and there has been no change in the applicable building code negatively affecting the performance of this product.

TERMINATION of this NOA will occur after the expiration date or if there has been a revision or change in the materials, use, and/or manufacture of the product or process. Misuse of this NOA as an endorsement of any product, for sales, advertising or any other purposes shall automatically terminate this NOA. Failure to comply with any section of this NOA shall be cause for termination and removal of NOA.

ADVERTISEMENT: The NOA number preceded by the words Miami-Dade County, Florida, and followed by the expiration date may be displayed in advertising literature. If any portion of the NOA is displayed, then it shall be done in its entirety.

INSPECTION: A copy of this entire NOA shall be provided to the user by the manufacturer or its distributors and shall be available for inspection at the job site at the request of the Building Official.

This NOA **revises NOA # 10-0721.01** (Former **FireDoor by Amweld International, LLC)** and consists of this page 1 and evidence pages E-1 & E-2, as well as approval document mentioned above.

The submitted documentation was reviewed by **Ishaq I. Chanda, P.E.**

MIAMI-DADE COUNTY APPROVED

7/12/12

NOTICE OF ACCEPTANCE: EVIDENCE SUBMITTED

A. DRAWINGS

1. Manufacturer's die drawings and sections (transferred from file # **10-0721.01**)
2. Drawing No **W02-52 Rev I**, titled "Firedoor series "6070 HMD-IG" STEEL. ENT. DR.", sheet 1 through 9 of 9, dated 05-23-02 and last revised on MAR 22, 2012, prepared by Al-Farooq Corporation, signed and sealed by Javad Ahmad, P.E.

Note: This revision consists of FBC 2010 notes & company name change only.

B. TESTS

TESTS (transferred from file # **10-0721.01**) Original test conducted per SFBC PA 201, 202 & 203-94, now termed as FBC TAS 201, 202 & 203-94.

1. Test reports on 1) Air Infiltration Test, per FBC TAS 202-94
   2) Uniform Static Air Pressure Test Loading per FBCTAS 202-94
   3) Water Resistance Test, per FBC TAS 202-94
   4) Forced Entry Resistance Test, per FBC TAS 202-94
   5) Large Missile Impact Test, FBC TAS 201-94
   6) Cyclic Loading Test, per FBC TAS 203-94

Along with installation diagram of outswing steel doors w/ steel storefront, marked-up by Fenestration Testing Laboratories, Inc. Test Reports Nos. **FTL 2801 (FTL00124),** dated 12/06/00, signed and sealed by Antonio Acevedo, P.E.

2 Additional test report **FTL-5237** (FTL-07065) dated 07/27/2007, issued by Fenestration Testing Laboratories, Inc., signed and sealed by Carlos S. Rionda, P.E.

C. CALCULATIONS

1. Anchor verification dated April 06, 2010, prepared by Al-Farooq Corporation, complying w/ FBC 2007, signed & sealed by Javad Ahmad, P.E.(submitted under file # **10-0721.01**).

D. QUALITY ASSURANCE

1. Miami Dade Department of Permitting, Environment, and Regulatory Affairs (PERA).

E. MATERIAL CERTIFICATIONS

1. Notice of Acceptance No. 08-0709.04 issued to Glasslam N. G. I. , dba Nebula Glass Inc., for "Safety Plus II", expiring on 08/07/2013.
2. Notice of Acceptance No. 07-1116.11 issued to SAFGLAS, Inc., for "SAF-GLAS Polycarbonate laminate", expiring on 12/16/2012.
3. Tensile Test prepared by ATC Associates, Inc., Project No. 13974.0001(FTL#2891), dated December 28, 2000, for steel samples, tested per ASTM A370-96, signed and sealed by Steven E. Black, P.E. and Tensile Test prepared by FTL Inc., Report #2 (FTL#2801), dated 12-06-2000, for steel samples, tested per ASTM A370-96, signed & sealed by Antonio Acevedo, P.E.
4. Notice of Acceptance No. **11-0926.07** issued to Dyplast Product, LLC (Former Apache Products Company) for "EPS-Expanded Polystyrene Insulation", expiring on 01/11/17.
5.

Ishaq I. Chanda

Ishaq I. Chanda, P.E.
Product Control Examiner
NOA No 12-0323.12
Expiration Date: December 12, 2012
Approval Date: July 19, 2012

F. STATEMENTS

1. Statement letter of conformance to FBC 2010 and letter of no financial interest, prepared by Al Farooq Corporation, dated 03/14/12, signed and sealed by Javad Ahmad, P.E.
2. Statement letter of compliance, as part of above referenced test report, issued by Fenestration testing laboratory.
3. Official "Black Mountain Door" press release dated June 21, 2012 stating acquiring the assets, technology, "Firedoor ™ "brand and intellectual properties of Amweld International.
4. Statement letter dated May 08, 2012 stating acquiring all the assets of Amweld international, issued by Black Mountain door, signed by Jason W. Lisewski, V.P. Black Mountain Door.
5. Statement letter dated January 26, 2012 issued by Amweld International, LLC of notification of the assets of Amweld International was purchased by American Doors, LLC DBA Black Mountain Door, Mt. Sterling, KY, signed by David Earnshawn, trustee for Amweld International.
6. Copy of certificate of formation of "American Doors, LLC" issued by State of Delaware dated 10-11-11, signed by Jeffery W. Bullock, Secretary of State.
7. Copy of certificate of Amendment of "American Doors, LLC" changing name to "Black Mountain Door, LLC", issued by State of Delaware dated 06-20-12, signed by Jeffery W. Bullock, Secretary of State.

G. OTHER

1. This NOA **revises** NOA # **10-0721.01**, expiring on December 12, 2012.
2. Test proposal dated 08/02/06 approved by BCCO.
3. E-mail response dated July 10 &11, 2012 & documents from Mr. J. Lisewski, V.P. Black Mountain Door.

Ishaq I. Chanda

Ishaq I. Chanda, P.E.
Product Control Examiner
NOA No 12-0323.12
Expiration Date: December 12, 2012
Approval Date: July 19, 2012

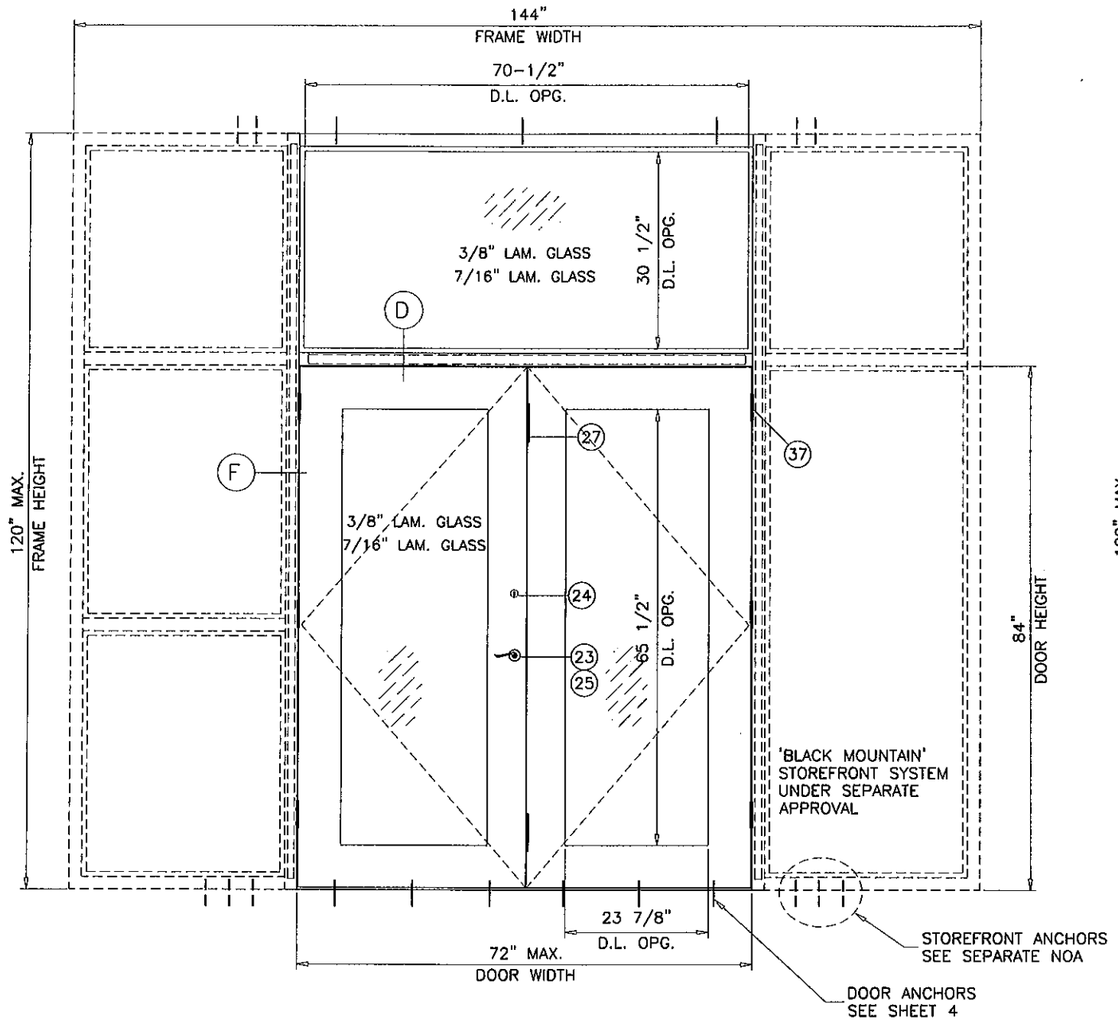

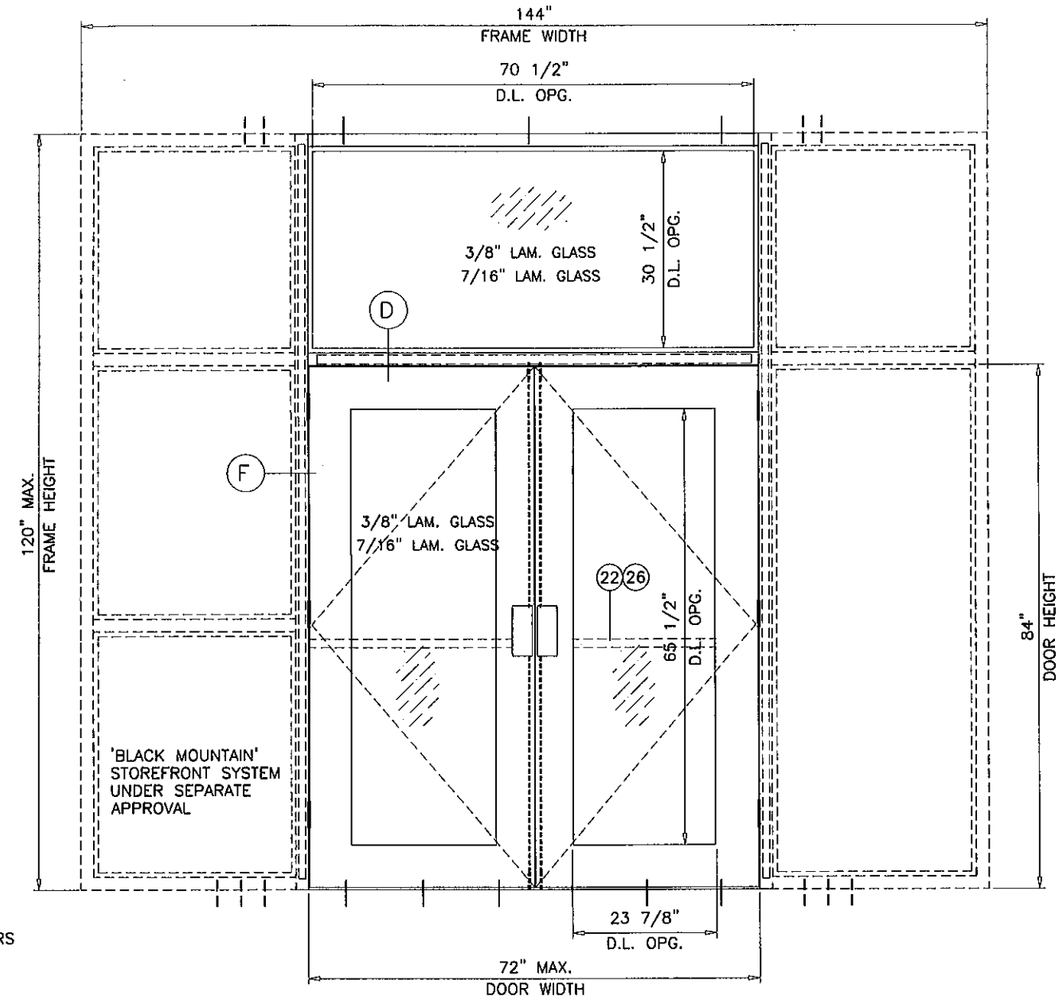

TYPICAL ELEVATION
TESTED UNITS

FIREDOOR SERIES 6070 HMD-IG STEEL ENTRANCE DOOR

APPROVAL APPLIES TO SINGLE (X) AND DOUBLE (XX) LEAF DOORS WITH OR WITHOUT TRANSOMS.

MAX. DESIGN LOAD RATING OF DOOR & TRANSOMS TO BE AS PER CHART SHOWN ON SHEET 3.

LOWER CAPACITY OF DOOR, TRANSOM OR STOREFRONT SHALL CONTROL.

USE BUMPER THRESHOLD (2001/2005 AV) WHEN WATER INFILTRATION REQUIREMENTS ARE NOT APPLICABLE.

USE WATER THRESHOLD (149AV) WHEN WATER INFILTRATION REQUIREMENTS MUST BE MET.

THIS PRODUCT HAS BEEN DESIGNED AND TESTED TO COMPLY WITH THE REQUIREMENTS OF THE FLORIDA BUILDING CODE INCLUDING HIGH VELOCITY HURRICANE ZONE (HVHZ).

ANCHORS SHALL BE AS LISTED, SPACED AS SHOWN ON DETAILS, ANCHORS EMBEDMENT TO BASE MATERIAL SHALL BE BEYOND WALL DRESSING OR STUCCO.

ANCHORING OR LOADING CONDITIONS NOT SHOWN IN THESE DETAILS ARE NOT PART OF THIS APPROVAL.

MATERIALS INCLUDING BUT NOT LIMITED TO STEEL/METAL SCREWS, THAT COME INTO CONTACT WITH OTHER DISSIMILAR MATERIALS SHALL MEET THE REQUIREMENTS OF THE FLORIDA BLDG. CODE SECTION 2003.8.4.

THESE DOORS ARE RATED FOR LARGE & SMALL MISSILE IMPACT. SHUTTERS ARE NOT REQUIRED.

PRODUCT REVISED
as complying with the Florida
Building Code
Acceptance No 12-0323.12
Expiration Date Dec 12, 2012
By (Shea) Chand
Miami Dade Product Control

Engr: JAVAD AHMAD
CIVIL
FLA. PE # 70592
C.A.N. 3538

MAR 22 2012

afc

AL-FAROOQ CORPORATION
ENGINEERS & PRODUCT DEVELOPMENT
1235 S.W. 87 AVE
MIAMI, FLORIDA 33174
TEL. (305) 264-8100 FAX. (305) 262-6978

COMP-ANL\W02-52FDC

FIREDOOR SERIES 6070 HMD-IG STEEL ENT. DR.

BLACK MOUNTAIN DOOR, LLC.
310 FLINT DRIVE
MT. STERLING, KY 40353
TEL. (855) 370-4580 FAX. (859) 762-0852

revisions:

no	date	by	description
F	06.09.09		MANUF. NAME REV.
G	10.20.09		NO CHANGE THIS SHEET
H	03.23.10		REV. PER BCCO COMMENTS
I	03.15.12		UPDATED TO 2010 FBC

date: 05-23-02
scale: 1/2"=1'-0"
dr. by: HAMID
chk. by:

drawing no.
W02-52

sheet 1 of 9

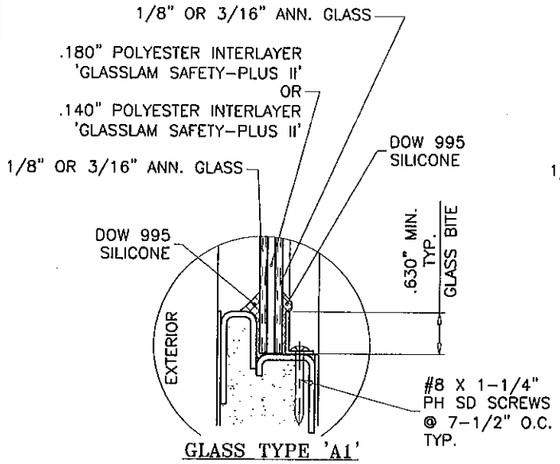

GLASS TYPE 'A1'
3/8" OR 7/16" LAM. GLASS

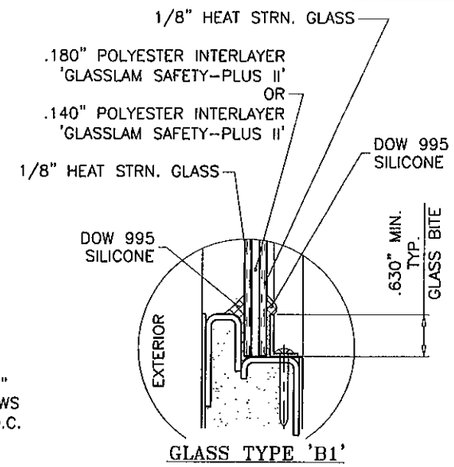

GLASS TYPE 'B1'
3/8" OR 7/16" LAM. GLASS

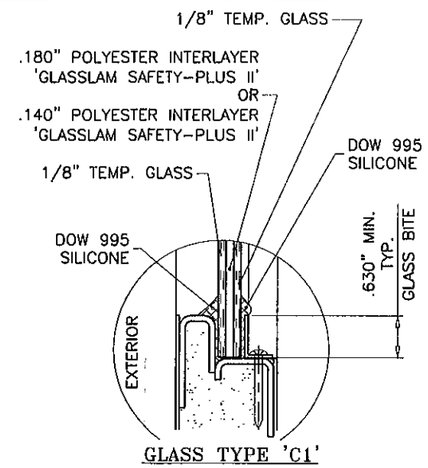

GLASS TYPE 'C1'
3/8" OR 7/16" LAM. GLASS

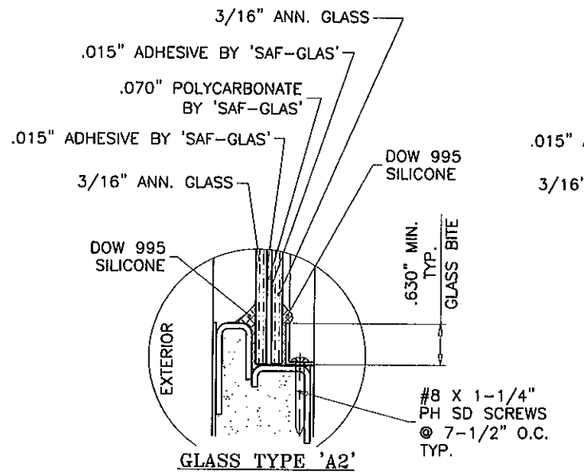

GLASS TYPE 'A2'
7/16" LAM. GLASS

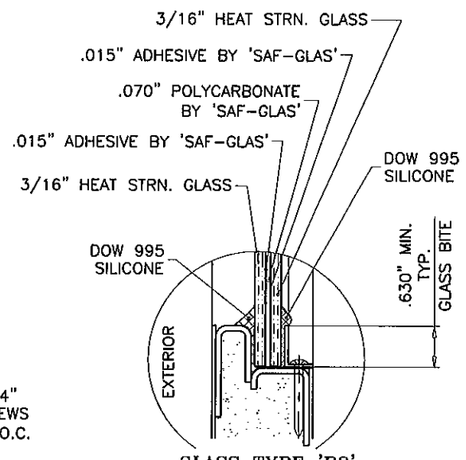

GLASS TYPE 'B2'
7/16" LAM. GLASS

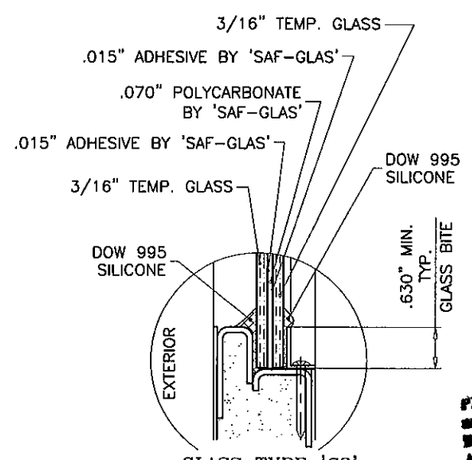

GLASS TYPE 'C2'
7/16" LAM. GLASS

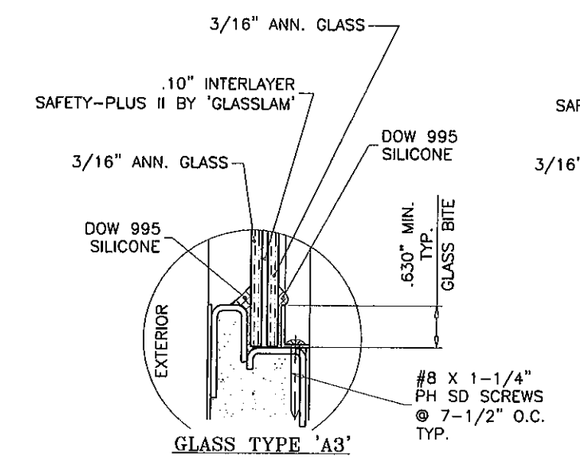

GLASS TYPE 'A3'
7/16" LAM. GLASS

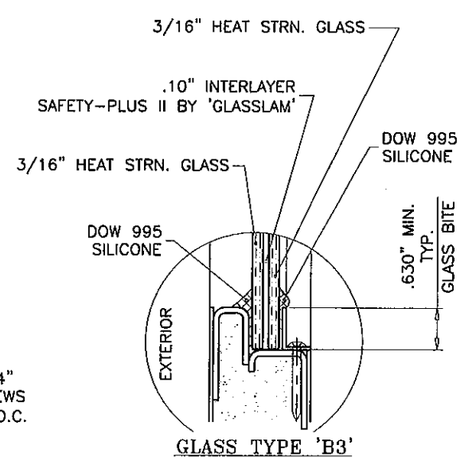

GLASS TYPE 'B3'
7/16" LAM. GLASS

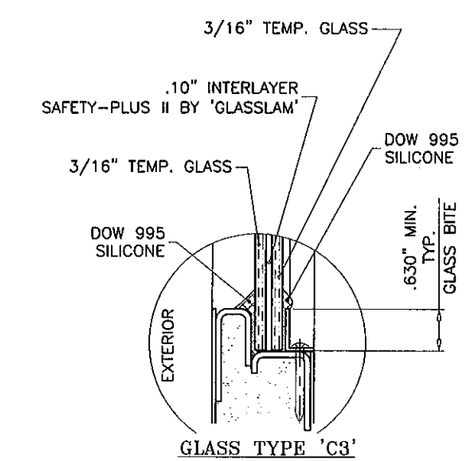

GLASS TYPE 'C3'
7/16" LAM. GLASS

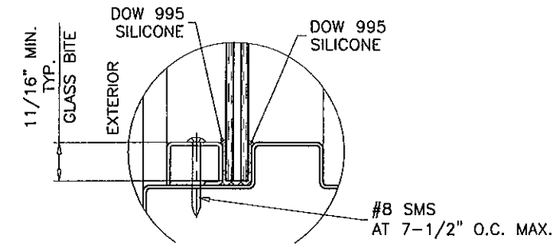

GLAZING DETAIL AT TRANSOM
SEE DETAILS BELOW FOR GLASS TYPES

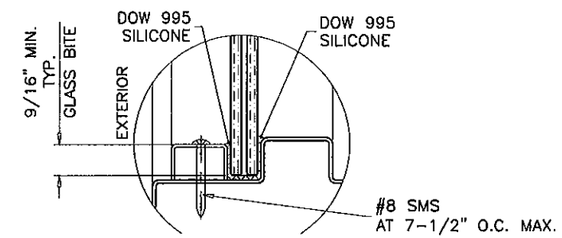

ALT. GLAZING DETAIL AT TRANSOM
SEE DETAILS BELOW FOR GLASS TYPES

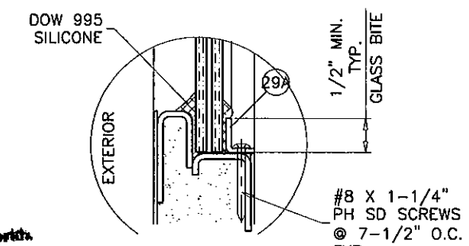

ALT. GLAZING STOP

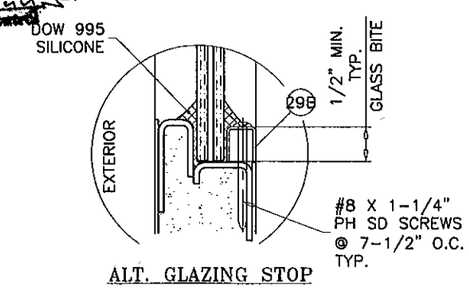

ALT. GLAZING STOP

PRODUCT REVISED
in complying with the Florida Building Code
Acceptance No. 12-0323.12
Expiration Date 12/12/12
By Ishan Manual Date Product Control

Engr: JAVAD AHMAD
CIVIL
FLA. PE # 70592
C.A.N. 3538

MAR 22 2012

AL-FAROOQ CORPORATION
ENGINEERS & PRODUCT DEVELOPMENT
1235 S.W. 87 AVE
MIAMI, FLORIDA 33174
TEL. (305) 264-8100 FAX. (305) 262-6978
COMP-ANL\W02-52FDC

FIREDOOR SERIES 6070 HMD-IG STEEL ENT. DR.

BLACK MOUNTAIN DOOR, LLC.
310 FLINT DRIVE
MT. STERLING, KY 40353
TEL. (855) 370-4580 FAX. (859) 762-0852

revisions:

no	date	by	description
F	06.09.09		MANUF. NAME REV.
G	10.20.09		NO CHANGE THIS SHEET
H	03.23.10		REV. PER BCCO COMMENTS
I	03.15.12		UPDATED TO 2010 FBC

date: 05-23-02
scale: 3/8" = 1"
dr. by: HAMID
chk. by:

drawing no.
W02-52

sheet 2 of 9

DOORS WITHOUT TRANSOMS

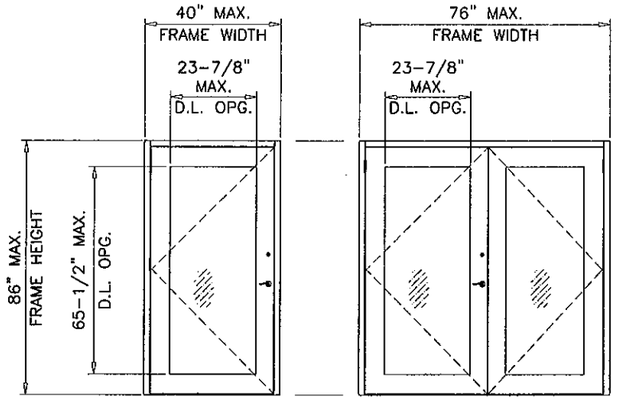

DESIGN LOAD CAPACITY - PSF (DOOR)	
GLASS TYPES 'A1', 'A2', 'A3' 'B1', 'B2', 'B3' 'C1', 'C2', 'C3'	
EXT. (+)	INT. (-)
75.0	75.0

USE BUMPER THRESHOLD (2001/2005 AV) WHEN WATER INFILTRATION REQUIREMENTS ARE NOT APPLICABLE.

USE WATER THRESHOLD (149AV) WHEN WATER INFILTRATION REQUIREMENTS MUST BE MET.
SEE SHEET 5 FOR DETAILS.

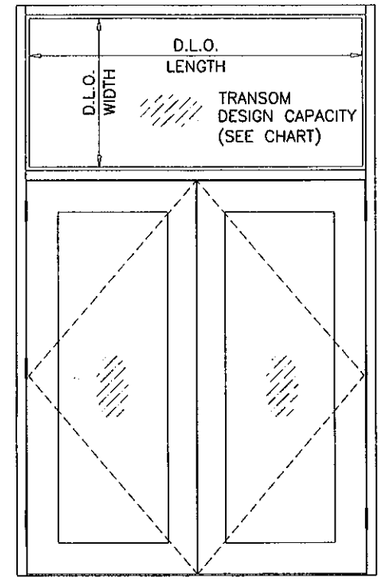

GLASS DESIGN LOAD CAPACITY - PSF (TRANSOM ONLY)			
D.L.O. DIMS.		GLASS TYPE 'A1'	GLASS TYPES 'A2', 'A3' 'B1', 'B2', 'B3' 'C1', 'C2', 'C3'
D.L.O. WIDTH	D.L.O. LENGTH	EXT.(+) / INT.(-)	EXT.(+) / INT.(-)
12"	30-1/2"	75.0	75.0
21"		75.0	75.0
24"		75.0	75.0
27"		75.0	75.0
30-1/2"		75.0	75.0
12"	36"	75.0	75.0
21"		75.0	75.0
24"		75.0	75.0
27"		75.0	75.0
30-1/2"		75.0	75.0
12"	42"	75.0	75.0
21"		75.0	75.0
24"		75.0	75.0
27"		75.0	75.0
30-1/2"		75.0	75.0
12"	48"	75.0	75.0
21"		75.0	75.0
24"		75.0	75.0
27"		75.0	75.0
30-1/2"		75.0	75.0
12"	54"	75.0	75.0
21"		75.0	75.0
24"		75.0	75.0
27"		75.0	75.0
30-1/2"		73.7	75.0
12"	60"	75.0	75.0
21"		75.0	75.0
24"		75.0	75.0
27"		72.7	75.0
30-1/2"		65.6	75.0
12"	66"	75.0	75.0
21"		75.0	75.0
24"		74.0	75.0
27"		65.1	75.0
30-1/2"		58.4	75.0
12"	70-1/2"	75.0	75.0
21"		75.0	75.0
24"		68.8	75.0
27"		60.5	75.0
30-1/2"		53.9	75.0

INSTRUCTIONS:

USE CHARTS AS FOLLOWS.

STEP 1 DETERMINE THE GLASS CAPACITY OF DOOR PANEL USING CHART AT LEFT.

STEP 2 FOR DOORS WITH TRANSOMS SEE CHART AT RIGHT TO CHECK DESIGN LOAD CAPACITY OF DESIRED TRANSOM PANEL GLASS SIZE.

STEP 3 USE MINIMUM OF ABOVE TWO RATINGS AS THE LIMITING CAPACITY OF THE SYSTEM.

PRODUCT REVISED
as complying with the Florida
Building Code
Acceptance No 12-0323.12
Expiration Date 12/12/17
By [signature]
Miami Dade Product Control

NOTE:
GLASS CAPACITIES ON THIS SHEET ARE BASED ON ASTM E1300-04 (3 SEC. GUSTS) AND FLORIDA BUILDING COMMISSION DECLARATORY STATEMENT DCA05-DEC-219

Engr: JAVAD AHMAD
CIVIL
FLA. PE # 70592
C.A.N. 3538

MAR 22 2012

AL-FAROOQ CORPORATION
ENGINEERS & PRODUCT DEVELOPMENT
1235 S.W. 87 AVE
MIAMI, FLORIDA 33174
TEL. (305) 264-8100 FAX. (305) 262-6978
COMP-ANL\W02-52FDC

FIREDOOR SERIES 6070 HMD-IG STEEL ENT. DR.

BLACK MOUNTAIN DOOR, LLC.
310 FLINT DRIVE
MT. STERLING, KY 40353
TEL. (855) 370-4580 FAX. (859) 762-0852

revisions:

no	date	by	description
F	06.09.09		MANUF. NAME REV.
G	10.20.09		NO CHANGE THIS SHEET
H	03.23.10		REV. PER BCCO COMMENTS
I	03.15.12		UPDATED TO 2010 FBC

date: 05-23-02
scale: 1/2"=1'-0"
dr. by: HAMID
chk. by:

drawing no.
W02-52

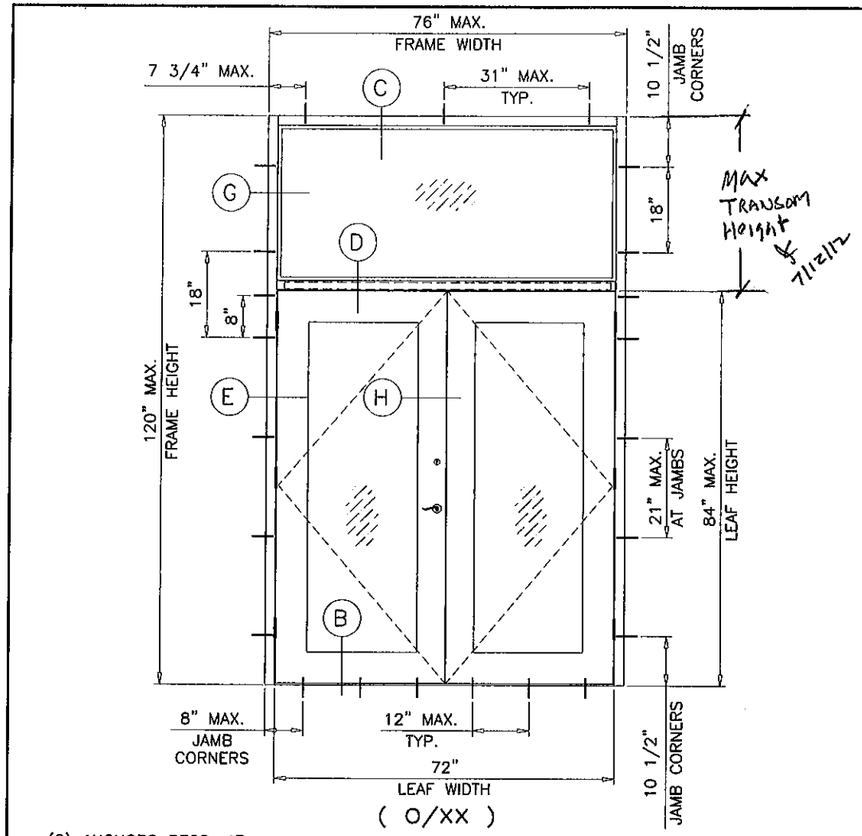

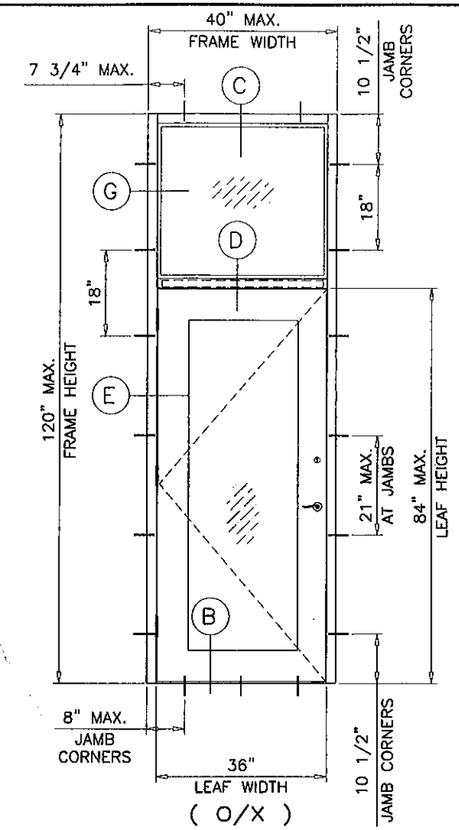

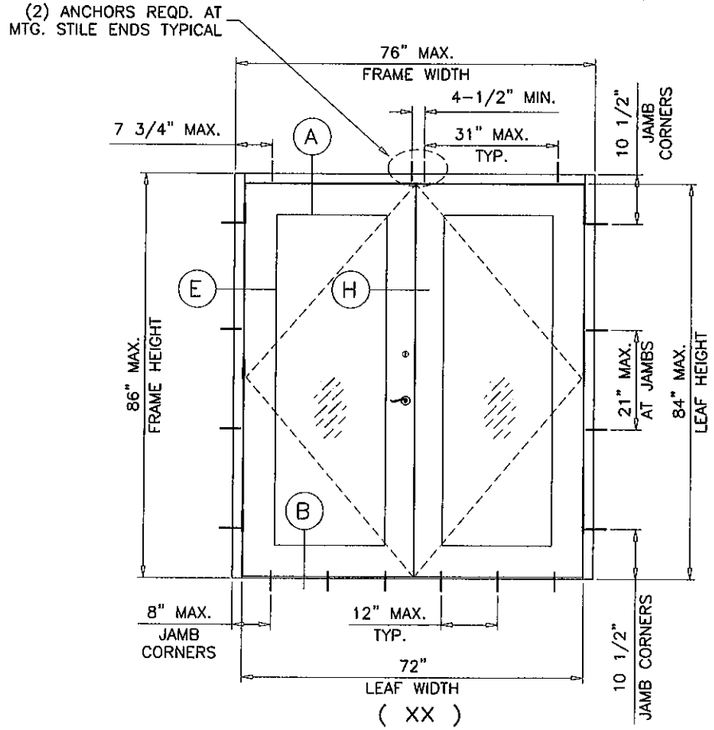

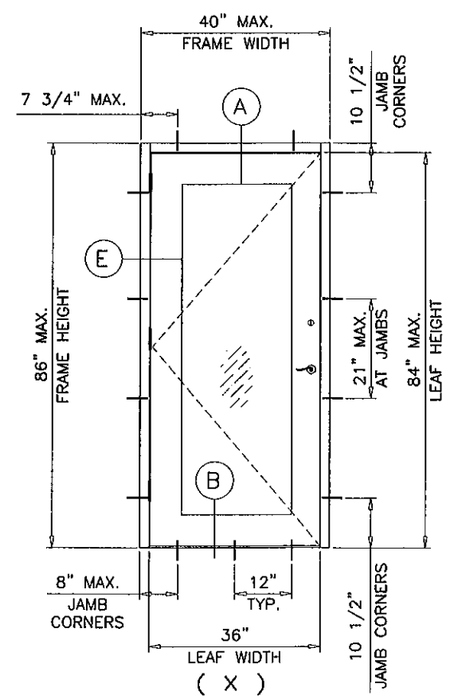

APPROVED CONFIGURATIONS

LOCK OPTIONS:

OPTION #1:

ACTIVE LEAF:

SCHLAGE 'AL' SERIES CYL. LEVER LOCKSET MOUNTED 38" TO 40-3/8" FROM FINISHED FLOOR TO CENTERLINE OF STRIKE.

SCHLAGE 'B' SERIES 600/700/800 DEADBOLTS MOUNTED 48" FROM FINISHED FLOOR TO CENTERLINE OF STRIKE.

INACTIVE LEAF

ROCKWOOD 555 FLUSHBOLTS MOUNTED 12" FROM EACH END OF DOOR TO CENTERLINE
2-3/4" X 1-1/8" X 1/16" DEADLOCK STRIKE
4-7/8" X 1-1/4" X 1/16" ASA STRIKE

OPTION #2:

ACTIVE/INACTIVE LEAF

'VON DUPRIN 9927' VERTICAL ROD PANIC EXIT DEVICE W/ 499 STRIKEPLATE MOUNTED 38" TO 40-3/8" FROM FINISHED FLOOR.

OPTION #3:

ACTIVE LEAF:

SCHLAGE 'L' SERIES 94XX MORTISE LOCK (FUNCTION MUST INCLUDE DEADBOLT) MOUNTED 38" TO 40-3/8" FROM FINISHED FLOOR TO CENTERLINE OF STRIKE.

INACTIVE LEAF

ROCKWOOD 555 FLUSHBOLTS MOUNTED 12" FROM EACH END OF DOOR TO CENTERLINE
4-7/8" X 1-1/4" X 1/16" ASA STRIKE

OPTION #4:

ACTIVE/INACTIVE LEAF

VON DUPRIN 99 RIM PANIC EXIT DEVICE W/ 299 STRIKEPLATE MOUNTED 38" TO 40-3/8" FROM FINISHED FLOOR.
WITH VON DUPRIN #9954 REMOVABLE MULLION, SEE SHEET 7 FOR DETAIL.

NOTE: TOP AND BOTTOM FLUSH BOLTS MUST BE ENGAGED DURING PERIODS OF HURRICANE WARNING.

HINGES:

STEEL MORTISE HINGE 1079
AT 7-1/4" TO 9-3/4" FROM TOP TO CL OF HINGE
AT 7-1/4" TO 12-5/8" FROM BOTTOM TO CL OF HINGE
(1) CENTER HINGE EQUALLY SPACED FROM TOP & BOTTOM HINGE

PRODUCT REVISED
as complying with the Florida Building Code
Acceptance No. 12-0323.12
Expiration Date 12/12/12
By [signature]
Miami-Dade Product Control

Engr: JAVAD AHMAD
CIVIL
FLA. PE # 70592
C.A.N. 3538

MAR 22 2012

AL-FAROOQ CORPORATION
ENGINEERS & PRODUCT DEVELOPMENT
1235 S.W. 87 AVE
MIAMI, FLORIDA 33174
TEL. (305) 264-8100 FAX. (305) 262-6978
COMP-ANL\W02-52FDC

FIREDOOR SERIES 6070 HMD-IG STEEL ENT. DR.

BLACK MOUNTAIN DOOR, LLC.
310 FLINT DRIVE
MT. STERLING, KY 40353
TEL. (855) 370-4580 FAX. (859) 762-0852

revisions:

no	date	by	description
F	06.09.09		MANUF. NAME REV.
G	10.20.09		LOCK & HINGE LOCATIONS REV.
H	03.23.10		REV. PER BCCO COMMENTS
I	03.15.12		UPDATED TO 2010 FBC

date: 05-23-02
scale: 1/2"=1'-0"
dr. by: HAMID
chk. by:

drawing no.
W02-52

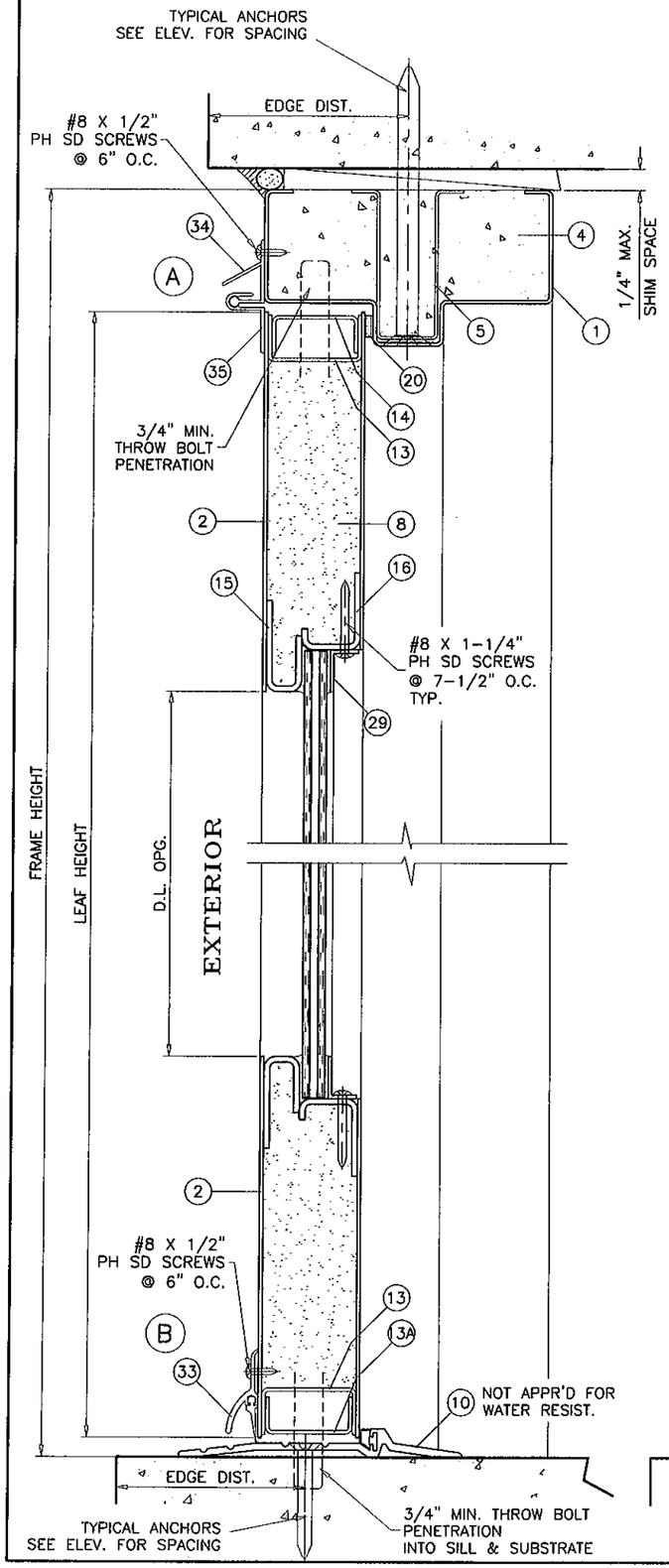

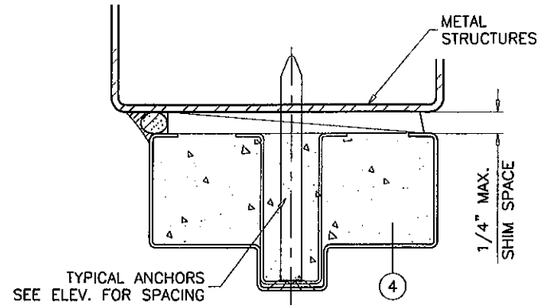

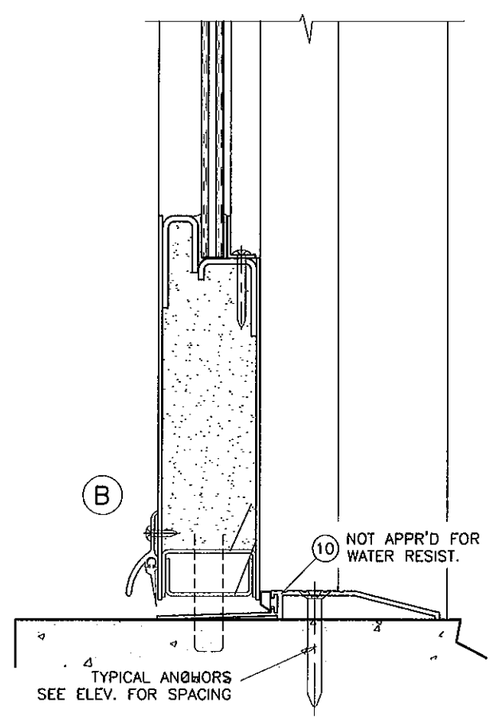

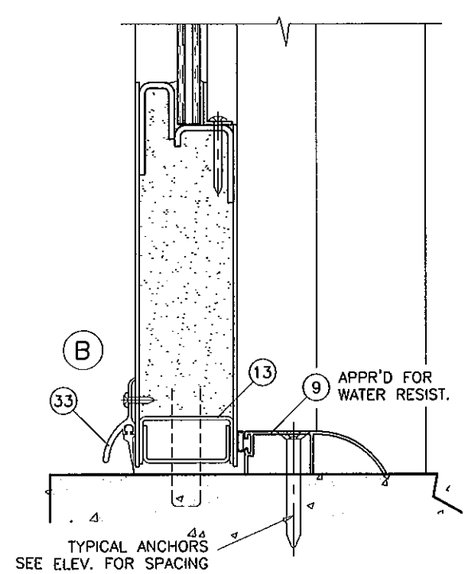

METAL STRUCTURES NOT BY BLACK MOUNTAIN DOOR MUST SUPPORT LOADS IMPOSED BY DOOR SYSTEM AND TRANSFER THEM TO THE BUILDING STRUCTURE.

TYPICAL ANCHORS: SEE ELEV. FOR SPACING

3/8" DIA. CARBON STEEL SLEEVE ANCHOR HILTI
DIRECTLY INTO CONC. OR MASONRY
1-1/2" MIN. EMBED INTO CONCRETE
1-1/2" MIN. EMBED INTO MASONRY (@ JAMBS ONLY)
3-1/2" MIN. EDGE DISTANCE

3/8" DIA. SMS OR MACHINE BOLTS (GRADE 2 CRS)
INTO METAL STRUCTURES (STEEL OR ALUMINUM 1/8" MIN. THICK.)
STEEL : Fy = 36 KSI MIN.
ALUMINUM : 6063-T5 MIN.
(STEEL IN CONTACT WITH ALUMINUM TO BE PLATED OR PAINTED)

TYPICAL ANCHORS @ THRESHOLD:

1/4" DIA. ULTRACON BY 'ELCO' (Fu=177 KSI, Fy=155 KSI)
DIRECTLY INTO CONCRETE
WITH 1-1/2" MIN. EMBED INTO CONC.
2-1/2" MIN. EDGE DISTANCE

CONCRETE f'c = 3000 PSI MIN.
C-90 FILLED MASONRY BLOCK f'm = 2000 PSI MIN.

PRODUCT REVISED
as complying with the Florida
Building Code
Acceptance No 12-0323.12
Expiration Date 12/12/17
By
Miami-Dade Product Control

Engr: JAVAD AHMAD
CIVIL
FLA. PE # 70592
C.A.N. 3538

MAR 29 2012

AL-FAROOQ CORPORATION
ENGINEERS & PRODUCT DEVELOPMENT
1235 S.W. 87 AVE
MIAMI, FLORIDA 33174
TEL. (305) 264-8100 FAX. (305) 262-6978
COMP-ANL\W02-52FDC

FIREDOOR SERIES 6070 HMD-IG STEEL ENT. DR.

BLACK MOUNTAIN DOOR, LLC.
310 FLINT DRIVE
MT. STERLING, KY 40353
TEL. (859) 370-4580 FAX. (859) 762-0852

revisions:

no	date	by	description
F	06.09.09		MANUF. NAME REV.
G	10.20.09		NO CHANGE THIS SHEET
H	03.23.10		REV. PER BCCO COMMENTS
I	03.15.12		UPDATED TO 2010 FBC

date: 05-23-02
scale: 3/8" = 1"
dr. by: HAMID
chk. by:

drawing no.
W02-52

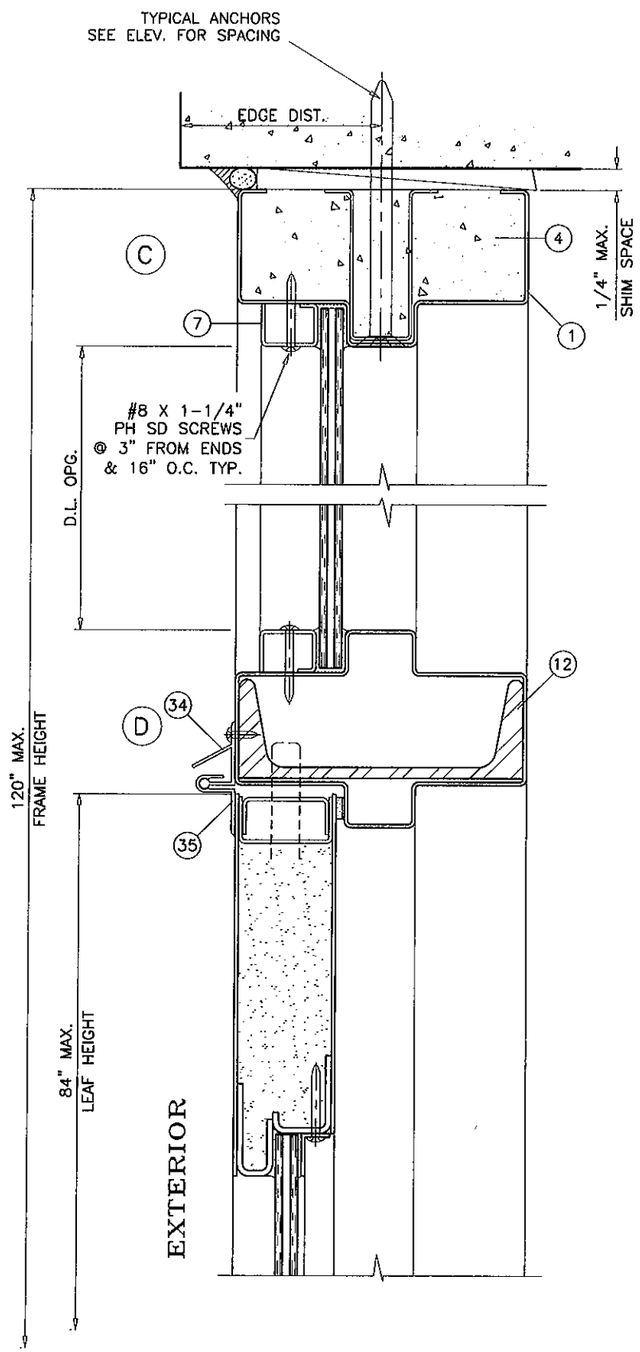

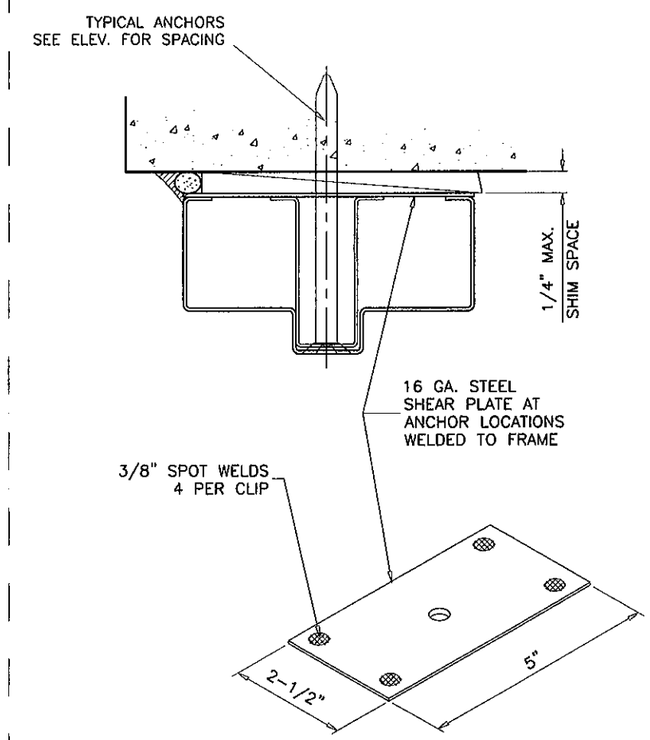

OPTIONAL ANCHOR DETAILS USING SHEAR CLIP
IN LIEU OF FILLED CONCRETE.
(HEAD APPLICATION ONLY)

PRODUCT REVIEWED
as complying with the Florida
Building Code
Acceptance No 12-0323.12
Expiration Date 12/12/12
By
Miami Dade Product Control

Engr: JAVAD AHMAD
CIVIL
FLA. PE # 70592
C.A.N. 3538

MAR 22 2012

AL-FAROOQ CORPORATION
ENGINEERS & PRODUCT DEVELOPMENT
1235 S.W. 87 AVE
MIAMI, FLORIDA 33174
TEL. (305) 264-8100 FAX. (305) 262-6978

COMP-ANL\W02-52FDC

FIREDOOR SERIES 6070 HMD-IG STEEL ENT. DR.

BLACK MOUNTAIN DOOR, LLC.
310 FLINT DRIVE
MT. STERLING, KY 40353
TEL. (859) 370-4580 FAX. (859) 762-0852

revisions:

no	date	by	description
F	06.09.09		MANUF. NAME REV.
G	10.20.09		NO CHANGE THIS SHEET
H	03.23.10		REV. PER BCCO COMMENTS
I	03.15.12		UPDATED TO 2010 FBC

date: 05-23-02
scale: 3/8" = 1"
dr. by: HAMID
chk. by:

drawing no.
W02-52

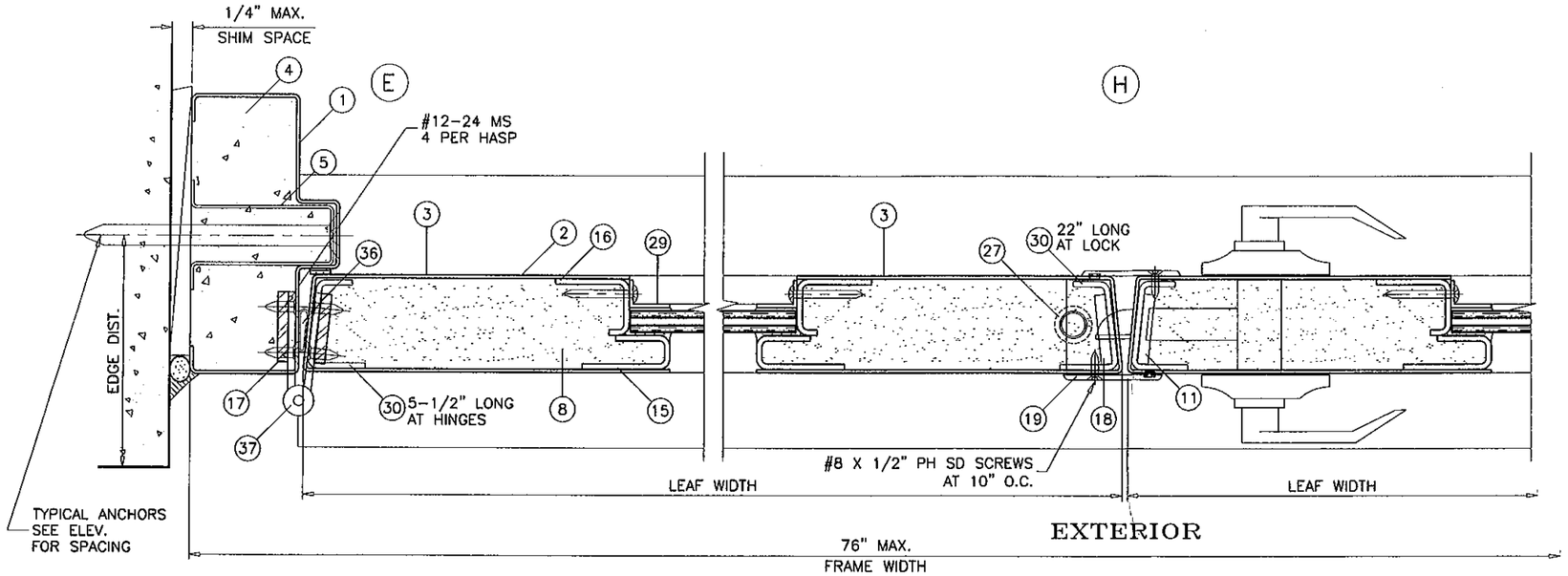

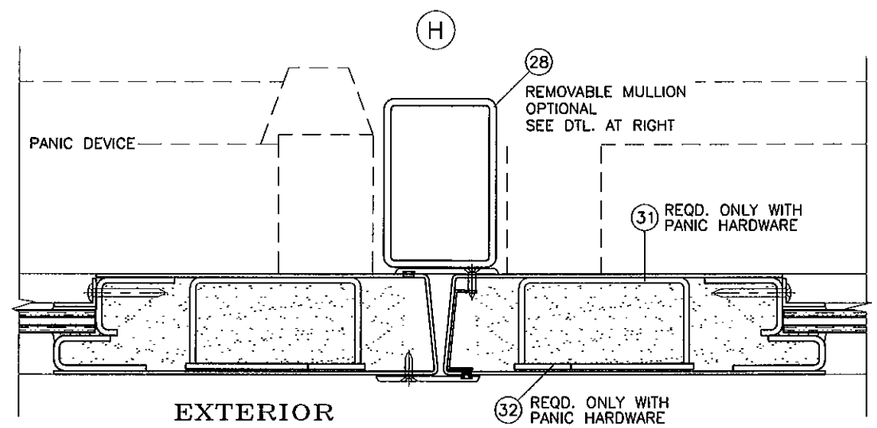

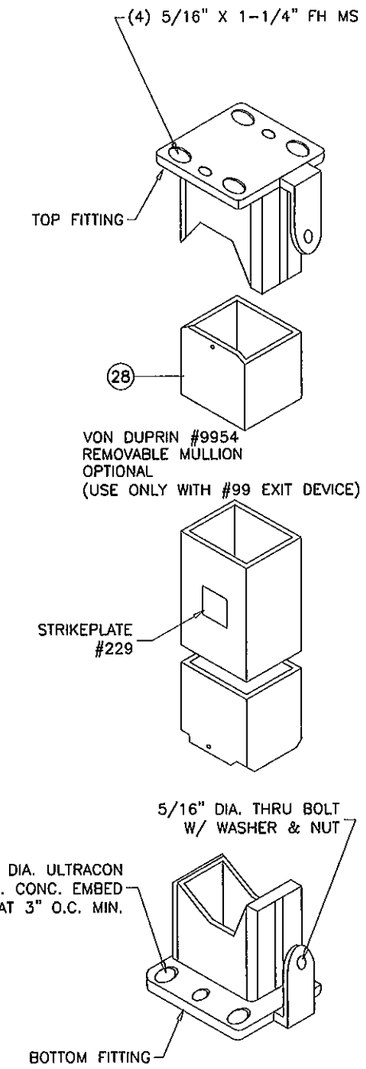

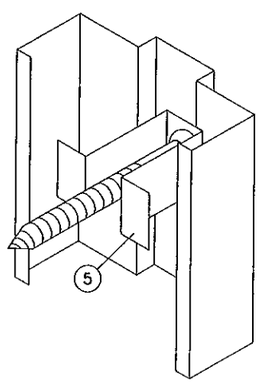

PRODUCT REVISED
as complying with the Florida
Building Code
Acceptance No. 12-0323.12
Expiration Date 12/12/12
By Ishaq I. Chanda
Miami Dade Product Control

Engr: JAVAD AHMAD
CIVIL
FLA. PE # 70592
C.A.N. 3538

MAR 22 2012

AL-FAROOQ CORPORATION
ENGINEERS & PRODUCT DEVELOPMENT
1235 S.W. 87 AVE
MIAMI, FLORIDA 33174
TEL. (305) 264-8100 FAX. (305) 262-6978

COMP-ANL\W02-52FDC

FIREDOOR SERIES 6070 HMD-IG STEEL ENT. DR.

BLACK MOUNTAIN DOOR, LLC.
310 FLINT DRIVE
MT. STERLING, KY 40353
TEL. (855) 370-4580 FAX. (859) 762-0852

revisions:

no	date	by	description
F	06.09.09		MANUF. NAME REV.
G	10.20.09		NO CHANGE THIS SHEET
H	03.23.10		REV. PER BCCO COMMENTS
I	03.15.12		UPDATED TO 2010 FBC

date: 05-23-02
scale: 3/8" = 1"
dr. by: HAMID
chk. by:

drawing no.
W02-52

sheet 7 of 9

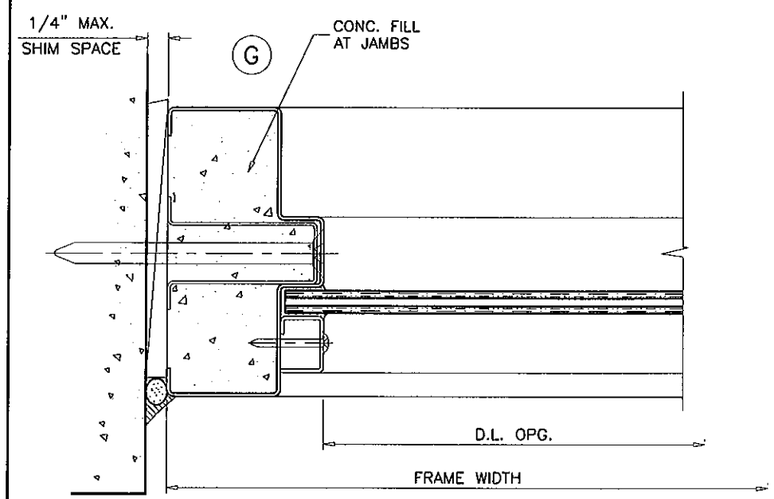

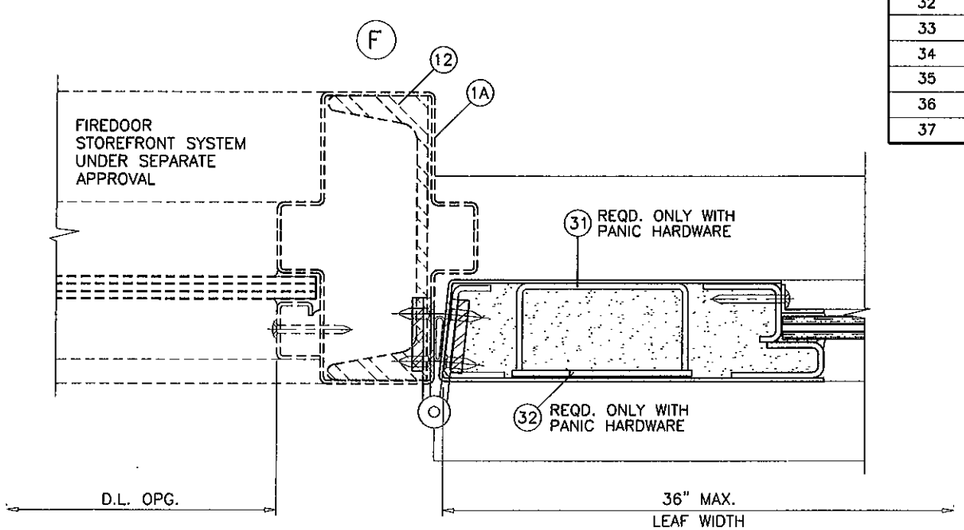

ITEM NO.	PART NO.	QUANTITY	DESCRIPTION	MATERIAL	MANF./SUPPLIER/REMARKS
1	–	AS REQD.	FRAME HEAD/JAMB	STEEL	16 GA. (.058") MIN. Fy = 41,000
1A	–	AS REQD.	FRAME VERTICAL/HORIZONTAL	STEEL	16 GA. (.058")
2	–	2 LEAF	TOP AND BOTTOM RAIL	STEEL	16 GA. (.058") MIN. Fy = 45,000
3	–	2/ LEAF	LOCK AND HINGE STILE	STEEL	16 GA. (.058")
4	–	–	FRAME GROUT	CONC.	3000 PSI MIN.
5	–	AS REQD.	JAMB BOLT SPACER	STEEL	2" X 2 5/8" X 18 GA.
7	–	–	TRANSOM GLASS STOP	STEEL	16 GA. FORMED
7A	–	–	ALT. TRANSOM GLASS STOP	STEEL	16 GA. FROMED
8	–	1	POLYSTYRENE CORE	–	'DYPLAST PRODUCTS LLC' W/ CURRENT NOA
9	149AV	1	WATER THRESHOLD	ALUMINUM	PEMKO (OR)
10	2001/2005 AV	1	BUMPER THRESHOLD	ALUMINUM	PEMKO
11	–	1	LOCK REINFORCEMENT, FULL LENGTH	STEEL	1 1/8" X 3 1/8" X 12 GA., ASTM A36
12	C5 X 6.7	–	REINFORCING CHANNEL, FULL LENGTH	STEEL	1 3/4" X 5" X 1 3/4" X 3/16"
13	–	1/ RAIL	TOP AND BOTTOM RAIL CHANNEL	STEEL	.825" X 1.660" X .825" X 16 GA.
14	–	1/ RAIL	TOP AND BOTTOM RAIL CHANNEL	STEEL	.652" X 1.520" X .652" X 16 GA.
15	–	1/ RAIL-STILE	RAIL AND STILE CHANNEL	STEEL	1.625" X .625" X 1" X 12 GA.
15A	–	1/ RAIL-STILE	RAIL AND STILE CHANNEL	STEEL	1.625" X .625" X 1" X 14 GA.
15B	–	1/ RAIL-STILE	RAIL AND STILE CHANNEL	STEEL	1.594" X .625" X 3/4" X 18 GA.
16	–	1/ RAIL-STILE	RAIL AND STILE CHANNEL	STEEL	1.375" X 1.031" X .375" X 12 GA.
16A	–	1/ RAIL-STILE	RAIL AND STILE CHANNEL	STEEL	1.375" X 1.031" X .375" X 14 GA.
16B	–	1/ RAIL-STILE	RAIL AND STILE CHANNEL	STEEL	1.344" X 1.031" X .375" X 18 GA.
17	–	3	HINGE REINFORCEMENT (FRAME/DOOR)	STEEL	1 1/4" X 27" X 3/16"
18	–	1	STRIKE REINFORCEMENT	STEEL	12 GA. 1 3/8" X 6-7/16"
19	–	2	ASTRAGAL METAL OR 305CN PEMKO	–	PEMKO
20	P241-30	1	HEAD/JAMB WEATHERSTRIP	FOAM	3/16" X 3/8"
21	–	4	MOUNTING ANGLES WELDED TO FRAME	–	14 GA. 1" X 1"
22	9927	2	VERTICAL ROD EXIT DEVICE, W/ 499 STRIKE PLATE	–	VON DUPRIN
23	AL	1	CYL LEVER LOCKSET	–	SCHLAGE, 38" FROM BOTTOM
24	B	1	SERIES 600/700/800 DEADBOLT	–	SCHLAGE, 48" FROM FINISHED FLR.
25	L	1	MORTISE LOCK SERIES, 94XX W/ 10-072 STRIKE	–	SCHLAGE
26	99	2	RIM EXIT DEVICE, W/ 299 STRIKE PLATE	–	VON DUPRIN
27	555	2	1/2" DIA. FLUSH BOLTS @ INACT. DOOR, Fy = 15000 PSI	BRASS	ROCKWOOD, AT 12" FROM EACH END
28	#9954	1	REMOVABLE MULLION (Fy = 46 KSI MIN.)	–	VON DUPRIN, 2"X3"X82-1/4"X1/8" THK.
29	–	–	DOOR GLASS STOP ANGLE	STEEL	1/2" X 3/4" X 12 GA.
29A	–	–	DOOR GLASS STOP ANGLE	STEEL	5/8" X 1/2" X 12 GA.
29B	–	–	DOOR GLASS STOP CHANNEL	STEEL	5/8" X 1/2" X 5/8" X 18 GA.
30	–	3/ LEAF	REINFORCING CHANNEL, 22" LONG	STEEL	.625" X 1.625" X 1.125" X 12GA.
31	–	1/ LEAF	REINFORCING CHANNEL, 22 LONG	STEEL	1.53" X 3" X 1.53" X 12 GA.
32	–	1/ LEAF	REINFORCING BARS, 22" LONG	STEEL	2.158" X .10" AND .992" X .10"
33	345 AV	2	SWEEP	–	PEMKO (1/2" X 1 1/4")
34	347A	1	WEATHERSTRIP	VINYL	PEMKO (3/4" X 1 1/8")
35	68AR	2	WEATHERSTRIP	VINYL	PEMKO (3/4" X 13/16")
36	S88D	–	DOOR GASKET	SILICONE	PEMKO
37	1079	3/ LEAF	MORTISE HINGES AT 33" O.C.	–	MONT HARD

PRODUCT REVIEWED
as complying with the Florida
Building Code
Acceptance No. 12-0323.12
Expiration Date 12/12/12
By Ishrq I. Chowdhury
Miami Dade Product Control

Engr: JAVAD AHMAD
CIVIL
FLA. PE # 70592
C.A.N. 3538

MAR 22 2012

AL-FAROOQ CORPORATION
ENGINEERS & PRODUCT DEVELOPMENT
1235 S.W. 87 AVE
MIAMI, FLORIDA 33174
TEL. (305) 264-8100 FAX. (305) 262-6978
COMP-ANL\W02-52FDC

FIREDOOR SERIES 6070 HMD-16 STEEL ENT. DR.

BLACK MOUNTAIN DOOR, LLC.
310 FLINT DRIVE
MT. STERLING, KY 40353
TEL. (855) 370-4580 FAX. (859) 762-0852

revisions:

no	date	by	description
F	06.09.09		MANUF. NAME REV.
G	10.20.09		NO CHANGE THIS SHEET
H	03.23.10		REV. PER BCCO COMMENTS
I	03.15.12		UPDATED TO 2010 FBC

date: 05-23-02
scale: 3/8" = 1"
dr. by: HAMID
chk. by:

drawing no.
W02-52

sheet 8 of 9

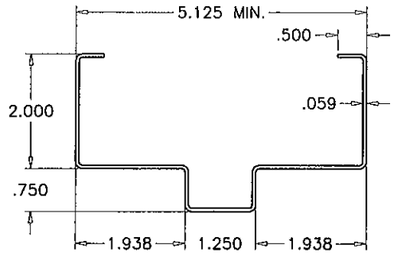

FRAME HEAD/JAMB

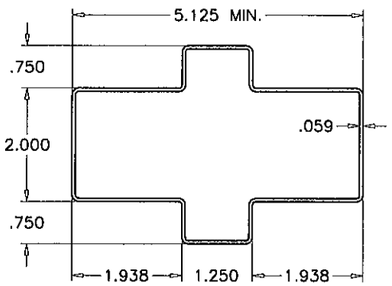

FRAME HORIZONTAL/VERTICAL

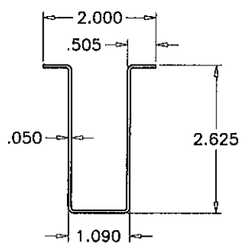

ANCHOR SPACER

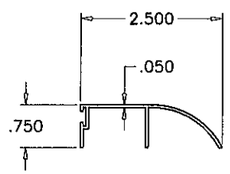

WATER THRESHOLD

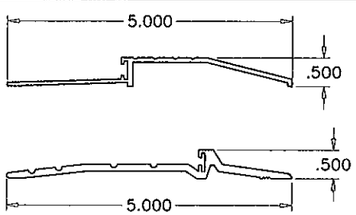

BUMPER THRESHOLD

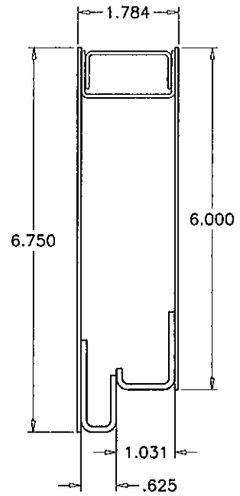

TOP/BOTTOM RAIL

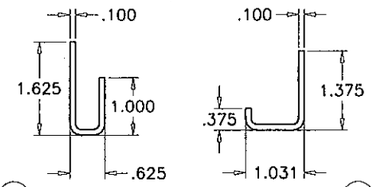

RAIL/STILE CHANNELS

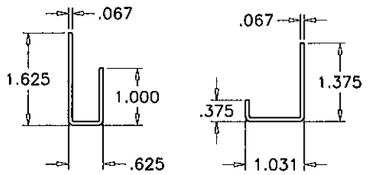

ALT. RAIL/STILE CHANNELS

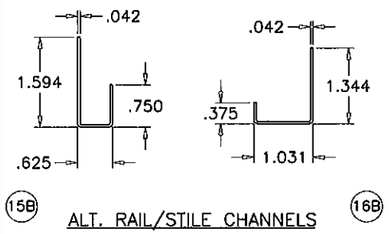

ALT. RAIL/STILE CHANNELS

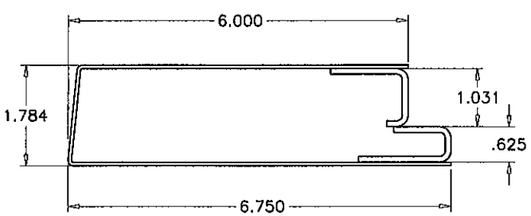

HINGE/LOCK STILE

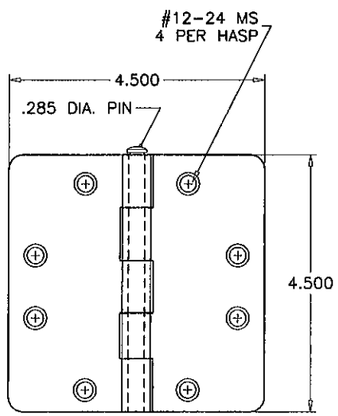

.134" THICK STEEL HINGE

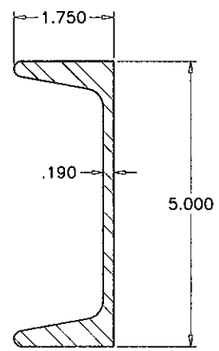

REINFORCING CHANNEL
C5 X 6.7

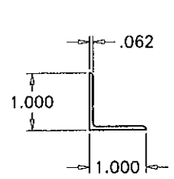

TRANSOM METAL PANEL ANGLE

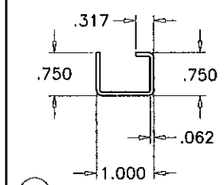

TRANSOM GLASS STOP

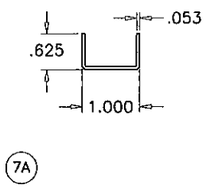

ALT. TRANSOM GLASS STOP

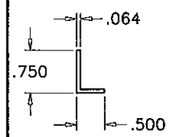

GLASS STOP

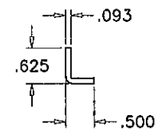

ALT. GLASS STOP

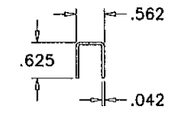

ALT. GLASS STOP

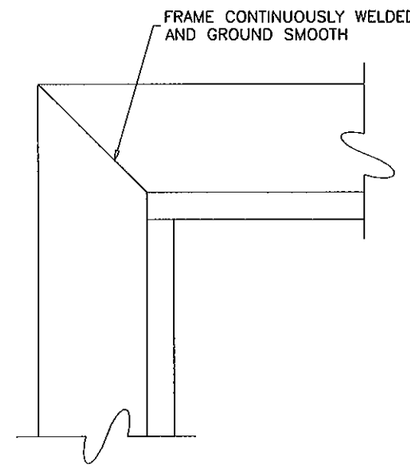

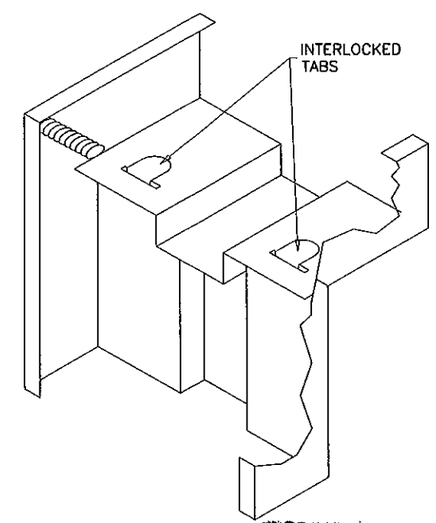

FRAME CORNERS

PRODUCT REVISED
to comply with the Florida
Building Code
Application No. 12-0323.12
Expiration Date DEC 12, 2012
By Ishaq I. Hussain
Product Control

Engr: JAVAD AHMAD
CIVIL
FLA. PE # 70592
C.A.N. 3538

MAR 22 2012

AL-FAROOQ CORPORATION
ENGINEERS & PRODUCT DEVELOPMENT
1235 S.W. 87 AVE
MIAMI, FLORIDA 33174
TEL. (305) 264-8100 FAX. (305) 262-6978
COMP-ANL\W02-52FDC

FIREDOOR SERIES 6070 HMD-IG STEEL ENT. DR.

BLACK MOUNTAIN DOOR, LLC.
310 FLINT DRIVE
MT. STERLING, KY 40353
TEL. (855) 370-4580 FAX. (859) 762-0852

revisions:

no	date	by	description
F	06.09.09		MANUF. NAME REV.
G	10.20.09		NO CHANGE THIS SHEET
H	03.23.10		NO CHANGE THIS SHEET
I	03.15.12		UPDATED TO 2010 FBC

date: 05-23-02
scale: 3/8" = 1"
dr. by: HAMID
chk. by:

drawing no.
W02-52