MIAMI-DADE COUNTY
DEPARTMENT OF PERMITTING, ENVIRONMENT, AND REGULATORY AFFAIRS (PERA)
BOARD AND CODE ADMINISTRATION DIVISION

MIAMI-DADE COUNTY
PRODUCT CONTROL SECTION
11805 SW 26 Street, Room 208
Miami, Florida 33175-2474
T (786) 315-2590 F (786) 315-2599
www.miamidade.gov/pera

NOTICE OF ACCEPTANCE (NOA)

Florida Coastal Impact Window, LLC
940 W 84th Street
Hialeah, FL 33014

SCOPE:

This NOA is being issued under the applicable rules and regulations governing the use of construction materials. The documentation submitted has been reviewed and accepted by Miami-Dade County PERA - Product Control Section to be used in Miami Dade County and other areas where allowed by the Authority Having Jurisdiction (AHJ).

This NOA shall not be valid after the expiration date stated below. The Miami-Dade County Product Control Section (In Miami Dade County) and/or the AHJ (in areas other than Miami Dade County) reserve the right to have this product or material tested for quality assurance purposes. If this product or material fails to perform in the accepted manner, the manufacturer will incur the expense of such testing and the AHJ may immediately revoke, modify, or suspend the use of such product or material within their jurisdiction. PERA reserves the right to revoke this acceptance, if it is determined by Miami-Dade County Product Control Section that this product or material fails to meet the requirements of the applicable building code.

This product is approved as described herein, and has been designed to comply with the Florida Building Code, including the High Velocity Hurricane Zone.

DESCRIPTION: Series "2009" Aluminum Horizontal Sliding Window – L.M.I.

APPROVAL DOCUMENT: Drawing No. **AD11–11**, titled "Series 2009 Alum. Horizontal Rolling Window–LMI", sheets 1 through 11 of 11, dated 04/20/11, with revision #1 dated 03/15/12, prepared by MCY Engineering, Inc., signed and sealed by Yiping Wang, P.E., bearing the Miami–Dade County Product Control Revision stamp with the Notice of Acceptance number and expiration date by the Miami–Dade County Product Control Section.

MISSILE IMPACT RATING: Large and Small Missile Impact Resistant

LABELING: Each unit shall bear a permanent label with the manufacturer's name or logo, city, state, model/series, and following statement: "Miami-Dade County Product Control Approved", unless otherwise noted herein.

RENEWAL of this NOA shall be considered after a renewal application has been filed and there has been no change in the applicable building code negatively affecting the performance of this product.

TERMINATION of this NOA will occur after the expiration date or if there has been a revision or change in the materials, use, and/or manufacture of the product or process. Misuse of this NOA as an endorsement of any product, for sales, advertising or any other purposes shall automatically terminate this NOA. Failure to comply with any section of this NOA shall be cause for termination and removal of NOA.

ADVERTISEMENT: The NOA number preceded by the words Miami-Dade County, Florida, and followed by the expiration date may be displayed in advertising literature. If any portion of the NOA is displayed, then it shall be done in its entirety.

INSPECTION: A copy of this entire NOA shall be provided to the user by the manufacturer or its distributors and shall be available for inspection at the job site at the request of the Building Official.

This NOA **revises NOA # 11-0513.01** and consists of this page 1 and evidence pages E-1 and E-2, as well as approval document mentioned above.

The submitted documentation was reviewed by **Manuel Perez, P.E.**

MIAMI-DADE COUNTY APPROVED

5/30/12

Florida Coastal Impact Window, LLC

NOTICE OF ACCEPTANCE: EVIDENCE SUBMITTED

A. DRAWINGS

1. Manufacturer's die drawings and sections.
2. Drawing No. **AD11–11**, titled "Series 2009 Alum. Horizontal Rolling Window – LMI", sheets 1 through 11 of 11, dated 04/20/11, with revision #1 dated 03/15/12, prepared by MCY Engineering, Inc., signed and sealed by Yiping Wang, P.E.

B. TESTS

1. Test reports on:1) Air Infiltration Test, per FBC, TAS 202–94
   2) Uniform Static Air Pressure Test, Loading per FBC TAS 202–94
   3) Water Resistance Test, per FBC, TAS 202–94
   4) Large Missile Impact Test per FBC, TAS 201–94
   5) Cyclic Wind Pressure Loading per FBC, TAS 203–94
   6) Forced Entry Test, per FBC 2411 3.2.1, TAS 202-94

   along with marked–up drawings and installation diagram of an aluminum horizontal sliding window, prepared by Fenestration Testing Laboratory, Inc., Test Report No. **FTL-6234**, dated 04/05/11, and addendum letter dated 07/21/11, all signed and sealed by Marlin D. Brinson, P.E.
   (Submitted under previous NOA# 11-0513.01)
2. Test reports on:1) Air Infiltration Test, per FBC, TAS 202–94
   2) Uniform Static Air Pressure Test, Loading per FBC TAS 202–94
   3) Water Resistance Test, per FBC, TAS 202–94
   4) Large Missile Impact Test per FBC, TAS 201–94
   5) Cyclic Wind Pressure Loading per FBC, TAS 203–94
   6) Forced Entry Test, per FBC 2411 3.2.1, TAS 202-94

   along with marked–up drawings and installation diagram of an aluminum horizontal sliding window, prepared by Fenestration Testing Laboratory, Inc., Test Report No. **FTL–5640**, dated 01/06/09, signed and sealed by Carlos S. Rionda, P.E.
   (Submitted under previous NOA# .09–0312.07)
3. Test reports on:1) Air Infiltration Test, per FBC, TAS 202–94
   2) Uniform Static Air Pressure Test, Loading per FBC TAS 202–94
   3) Water Resistance Test, per FBC, TAS 202–94
   4) Large Missile Impact Test per FBC, TAS 201–94
   5) Cyclic Wind Pressure Loading per FBC, TAS 203–94
   6) Forced Entry Test, per FBC 2411 3.2.1, TAS 202-94

   along with marked–up drawings and installation diagram of an aluminum horizontal sliding window, prepared by Fenestration Testing Laboratory, Inc., Test Report No. **FTL–5271**, dated 09/05/07, Carlos S. Rionda, P.E.
   (Submitted under previous NOA# 07–1018.07)

Manuel Perez, P.E.
Product Control Examiner
NOA No. 12-0326.08
Expiration Date: December 27, 2012
Approval Date: June 07, 2012

C. CALCULATIONS

1. Anchor verification calculations and structural analysis, complying with FBC–2007, prepared by MCY Engineering, Inc., dated 05/10/11, signed and sealed by Yiping Wang, P.E.
   (Submitted under previous NOA# 11-0513.01)
2. Glazing complies with ASTM E1300-04

D. QUALITY ASSURANCE

1. Miami-Dade Department of Permitting, Environment, and Regulatory Affairs (PERA)

E. MATERIAL CERTIFICATIONS

1. Notice of Acceptance No. **11–0624.02** issued to **E.I. DuPont DeNemours & Co.**, Inc. for their **"DuPont SentryGlas® Interlayer"** dated 08/25/11, expiring on 01/14/17.
2. Notice of Acceptance No. **11–0624.01** issued to **E.I. DuPont DeNemours & Co., Inc.** for their **"DuPont Butacite® PVB Interlayer"** dated 09/08/11, expiring on 12/11/16.

F. STATEMENTS

1. Statement letter of conformance and compliance with FBC 2010, dated March 15, 2012, signed and sealed by Yiping Wang, P.E.
2. Statement letter of no financial interest, dated May 02, 2011, signed and sealed by Yiping Wang, P.E.
   (Submitted under previous NOA# 11-0513.01)
3. Laboratory compliance letter for Test Report No. **FTL–6234**, issued by Fenestration Testing Laboratory, Inc., dated 04/05/11, signed and sealed by Marlin D. Brinson, P.E.
   (Submitted under previous NOA# 11-0513.01)
4. Laboratory compliance letter for Test Report No. **FTL–5640**, issued by Fenestration Testing Laboratory, Inc., dated 01/06/09, signed and sealed by Carlos S. Rionda, P.E.
   (Submitted under previous NOA# 09–0312.07)
5. Laboratory compliance letter for Test Report No. **FTL–5271**, issued by Fenestration Testing Laboratory, Inc., dated 09/05/07, signed and sealed by Carlos S. Rionda, P.E.
   (Submitted under previous NOA# 07–1018.07)

G. OTHERS

1. Notice of Acceptance No. **11-0513.01**, issued to Florida Coastal Impact Window, LLC for their Series "2009" Aluminum Horizontal Sliding Window – L.M.I., approved on 08/18/11 and expiring on 12/27/12.

Manuel Perez, P.E.
Product Control Examiner
NOA No. 12-0326.08
Expiration Date: December 27, 2012
Approval Date: June 07, 2012

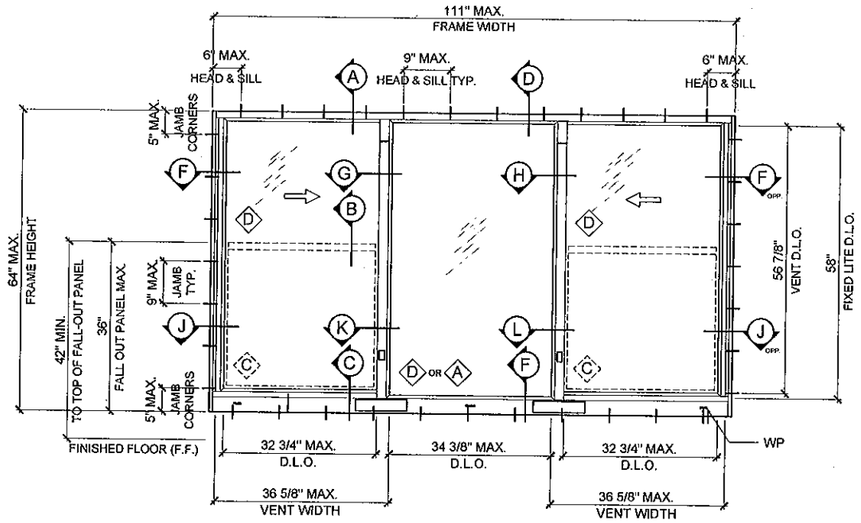

TYPICAL EXTERIOR ELEVATION A (XOX)

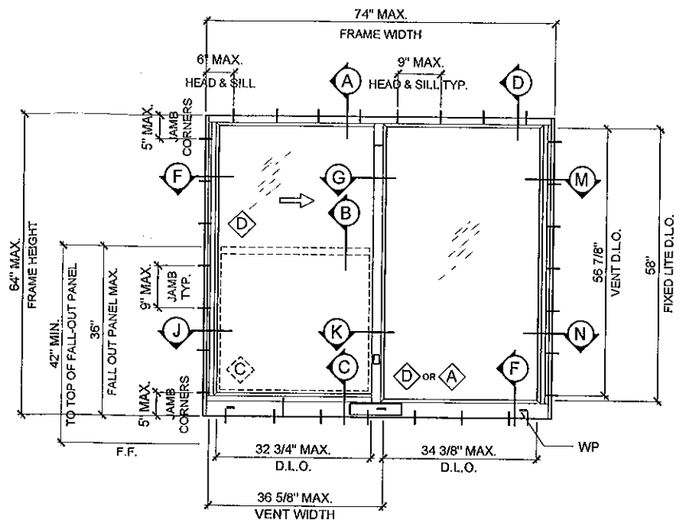

TYPICAL EXTERIOR ELEVATION B (XO)
(ELEVATION APPLY TO OX)

DESIGN LOADS
(FOR SIZE ABOVE OR SMALLER)
+ 80 PSF
- 80 PSF

GENERAL NOTES:

- THIS PRODUCT HAS BEEN DESIGNED AND TESTED TO COMPLY WITH THE REQUIREMENTS OF THE FLORIDA BUILDING CODE INCLUDING HIGH VELOCITY HURRICANE ZONE (HVHZ).
- GLASS CALCULATIONS BASED ON ASTM E1300-04.
- WINDOWS RATED FOR LARGE MISSILE IMPACT AND DO NOT REQUIRE SHUTTERS.
- THESE WINDOWS ARE APPROVED FOR AIR AND WATER INFILTRATION.
- ANCHORS SHALL BE AS LISTED, SPACED AS SHOWN ON DETAILS. ANCHORS EMBEDMENT TO BASE MATERIAL SHALL BE BEYOND WALL DRESSING OR STUCCO.
- ANCHORING OR LOADING CONDITIONS NOT SHOWN IN THESE DETAILS ARE NOT PART OF THIS APPROVAL.
- WOOD BUCKS BY OTHERS MUST BE SOUTHERN PINE, G = 0.55 AND MUST BE ANCHORED PROPERLY TO TRANSFER LOADS TO THE STRUCTURE.
- A LOAD DURATION FACTOR IN ALLOWABLE STRESS IS USED IN DESIGN OF ANCHORS INTO WOOD ONLY.
- PROVIDE 1/4" MAX. LOAD BEARING SHIM SPACE (TYP.).
- MATERIALS INCLUDING BUT NOT LIMITED TO STEEL/METAL SCREWS THAT COME INTO CONTACT WITH OTHER DISSIMILAR MATERIALS SHALL MEET THE REQUIREMENTS OF FLORIDA BUILDING CODE SECTION 2003.8.4.
- METAL STRUCTURES NOT BY FLORIDA COASTAL IMPACT WINDOWS LLC MUST SUPPORT LOADS IMPOSED BY WINDOW SYSTEM AND TRANSFER THEM TO THE BUILDING STRUCTURE.
- FALL-OUT PANEL IS REQ'D WHEN SILL ELEVATION IN RESPECT TO THE NEAR SIDE WALKING SURFACE IS LESS THAN 42". IF FALL-OUT PANELS ARE USED ONLY GLASS TYPE "A" MUST BE USED AT FIXED PANEL.

MAR 15 2012

PRODUCT REVISED
as complying with the Florida Building Code
Acceptance No 12-0326.08
Expiration Date Dec. 27, 2012
By Manuel Perez
Miami Dade Product Control
MIAMI DADE COUNTY

YIPING WANG, P.E.
FLORIDA REGISTRATION
PE #55983
C.A.N. 28677
STATE OF FLORIDA
PROFESSIONAL ENGINEER

REVISIONS

NO	DATE	DESCRIPTION
1	3/15/12	UPDATE TO 2010 FBC

MCY ENGINEERING, INC.
GLAZING CONSULTANTS
8501 SW 124 AVE. STE. 205A P: 305.271.0117
MIAMI, FL 33183 F: 786.573.5063
www.MCYEngineering.com MCY.Engineering@Att.net

SERIES 2009 ALUM. HORIZONTAL ROLLING WINDOW - LMI
FLORIDA COASTAL IMPACT WINDOW L.L.C
940 W 84 STREET
HIALEAH, FL 33014
P: (305) 828-8254 F: (305) 828-8255

DATE	04/20/11
SCALE	AS SHOWN
DRAWN	S. L.
PROJECT	11-027

DRAWING NO.
AD11-11

SHEET 1 OF 11

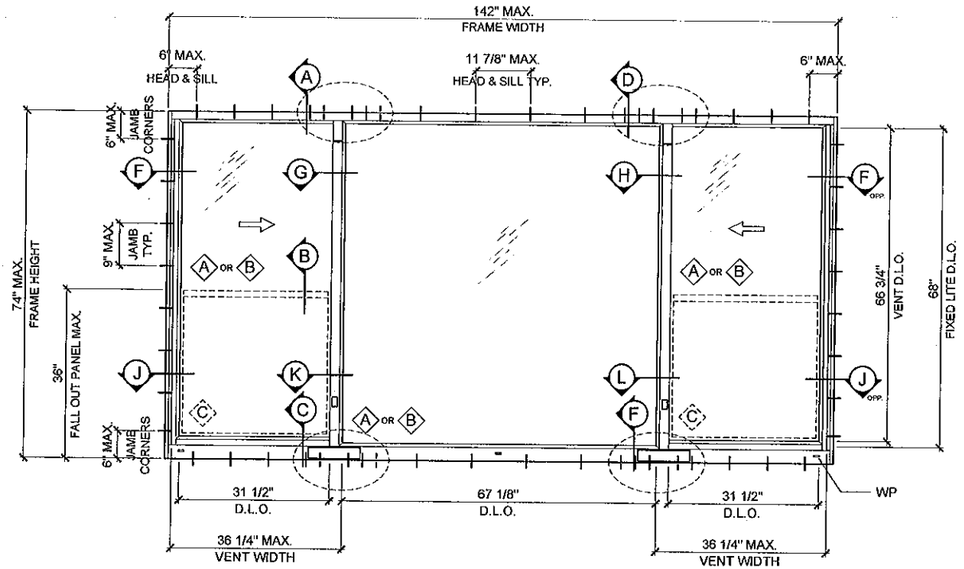

TYPICAL EXTERIOR ELEVATION C (XOX)

(1/4 - 1/2 - 1/4)

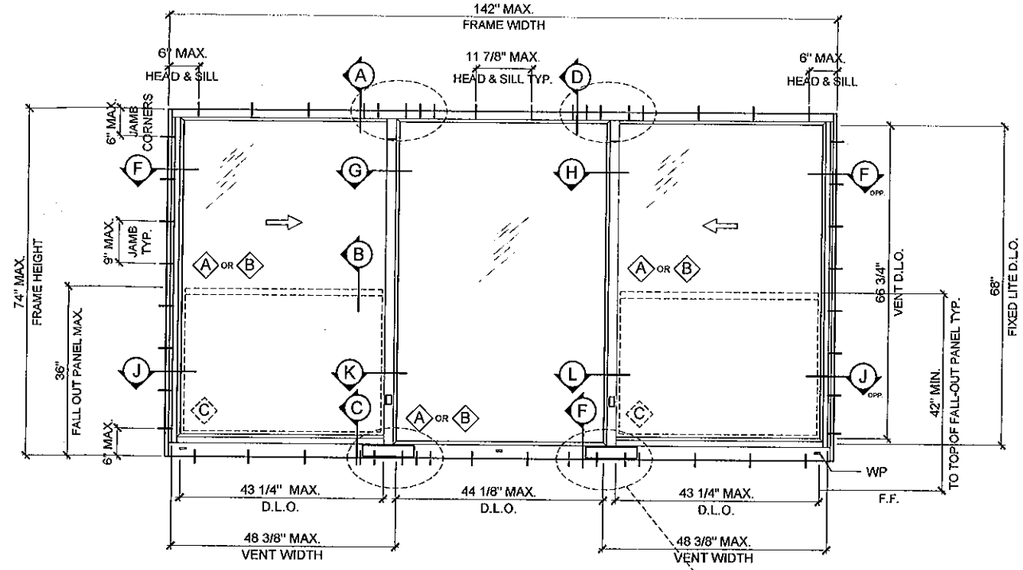

TYPICAL EXTERIOR ELEVATION D (XOX)

(1/3 - 1/3 - 1/3)

DESIGN LOADS
(FOR SIZE ABOVE OR SMALLER)
+ 110 PSF
- 150 PSF

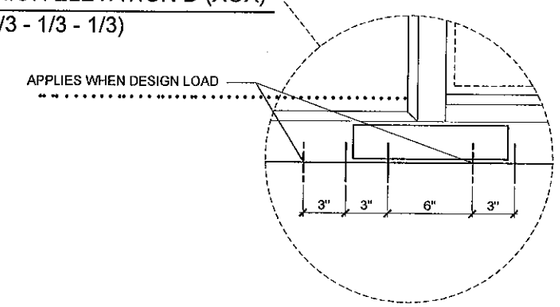

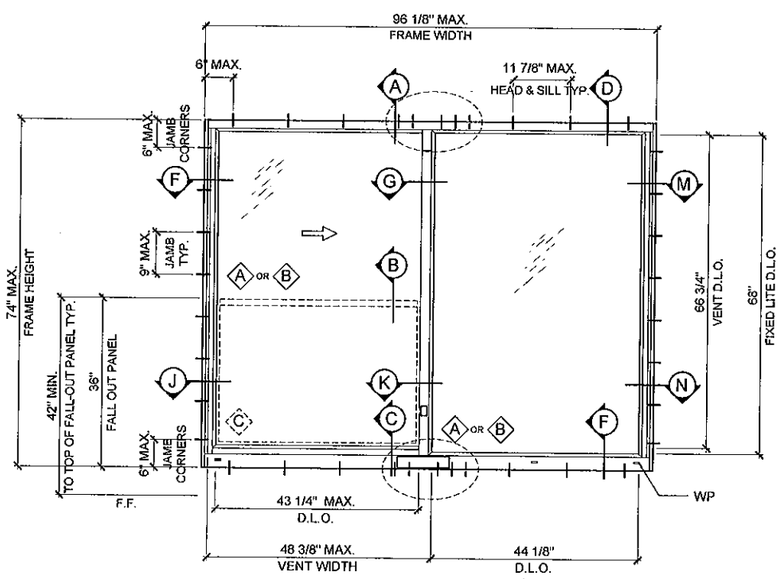

TYPICAL EXTERIOR ELEVATION E (XO)

(ELEVATION APPLY TO OX)

MAR 15 2012

PRODUCT REVISED
as complying with the Florida
Building Code
Acceptance No 12-0326.08
Expiration Date Dec. 27, 2012
By Manuel Ruiz
Miami Dade Product Control

MIAMI DADE COUNTY

YIPING WANG
YIPING WANG, P.E.
FLORIDA REGISTRATION
PE #55983
C.A. No 5938677
STATE OF FLORIDA
PROFESSIONAL ENGINEER

REVISIONS		
NO.	DATE	DESCRIPTION
1	3/15/12	UPDATE TO 2010 FBC

MCY ENGINEERING, INC.
GLAZING CONSULTANTS
8501 SW 124 AVE. STE. 205A P: 305.271.0117
MIAMI, FL 33183 F: 786.573.5063
www.MCYEngineering.com MCY.Engineering@att.net

SERIES 2009 ALUM. HORIZONTAL ROLLING WINDOW - LMI

FLORIDA COASTAL IMPACT WINDOW L.L.C

940 W 84 STREET
HIALEAH, FL 33014
P: (305) 828-8254 F: (305) 828-8255

DATE	04/20/11
SCALE	AS SHOWN
DRAWN	S. L.
PROJECT	11-027

DRAWING NO.
AD11-11

SHEET 2 OF 11

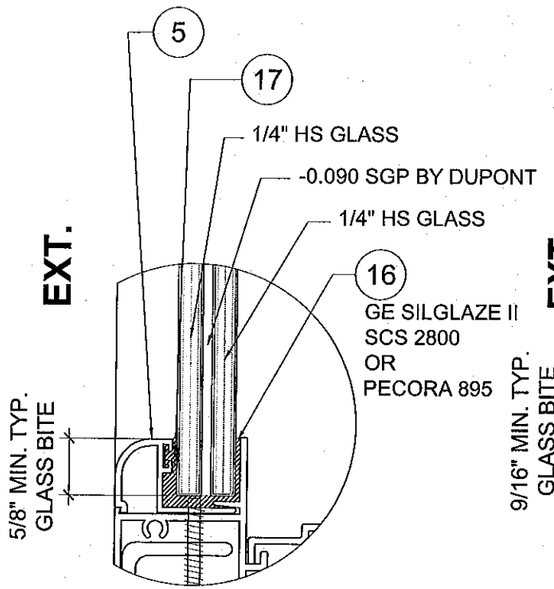

GLASS TYPE "A"
(FIXED PANEL SHOWN)

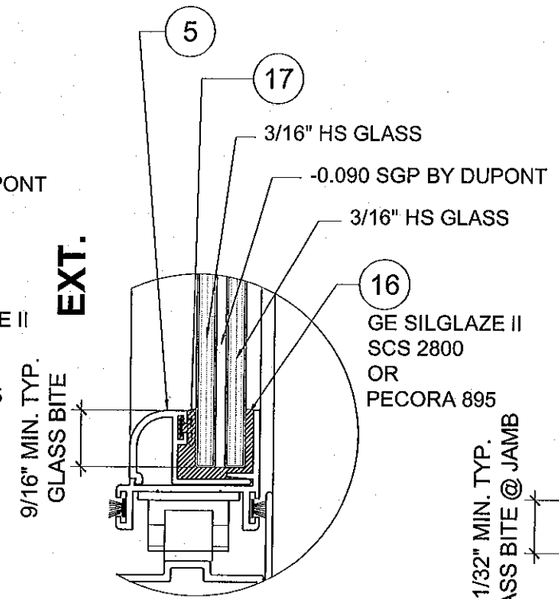

GLASS TYPE "B"
(MOVING PANEL SHOWN)

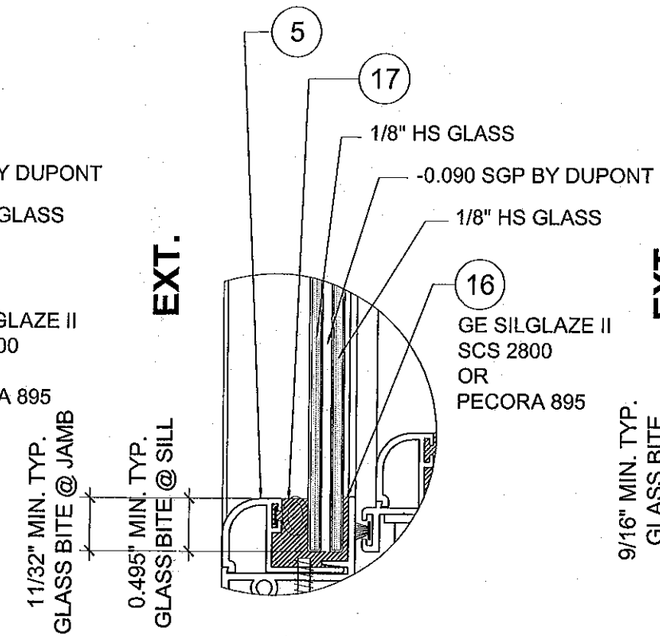

GLASS TYPE "C"
(FALL-OUT PANEL ONLY)

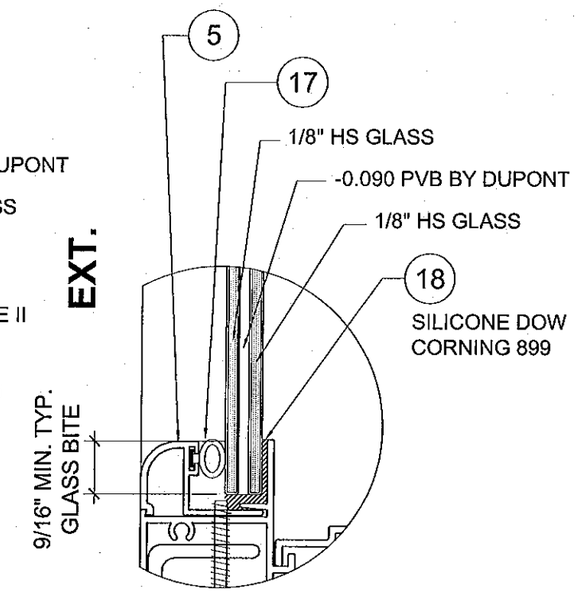

GLASS TYPE "D"
(FIXED PANEL SHOWN)

NOTE:

1. GLASS TYPE "A", "B" & "D" CAN BE USED AT FIXED PANEL OR MOVING PANEL
2. GLASS TYPE "B" MAX. AREA 36.5 FT ² (PANEL WIDTH * FRAME HEIGHT)
3. GLASS TYPE "A", "B" & "D" CANNOT BE USED ON FALLOUT PANELS
4. GLASS CAPACITIES ARE BASED ON ASTM E1300 - 04 (3 SEC. GUSTS)

PRODUCT REVISED
as complying with the Florida
Building Code
Acceptance No 12-0326.08
Expiration Date Dec. 27, 2012
By Manuel Sera
Miami Dade Product Control

MIAMI DADE COUNTY

YIPING WANG
LICENSE
YIPING WANG, P.E.
FLORIDA REGISTRATION
No. 55983
C.A.N. 28677
STATE OF
FLORIDA
PROFESSIONAL ENGINEER

MAR 15 2012

REVISIONS		
NO.	DATE	DESCRIPTION
1	3/15/12	UPDATE TO 2010 FBC

MCY ENGINEERING, INC.
GLAZING CONSULTANTS
8501 SW 124 AVE. STE. 205A P: 305.271.0117
MIAMI, FL. 33183 F: 786.573.5063
www.MCYEngineering.com MCY.Engineering@Att.net

SERIES 2009 ALUM. HORIZONTAL ROLLING WINDOW - LMI

FLORIDA COASTAL IMPACT WINDOW L.L.C
940 W 84 STREET
HIALEAH, FL 33014
P: (305) 828-8255 F: (305) 828-8254

DATE	04/20/11
SCALE	AS SHOWN
DRAWN	S. L.
PROJECT	11-027

DRAWING NO.
AD11-11

SHEET 3 OF 11

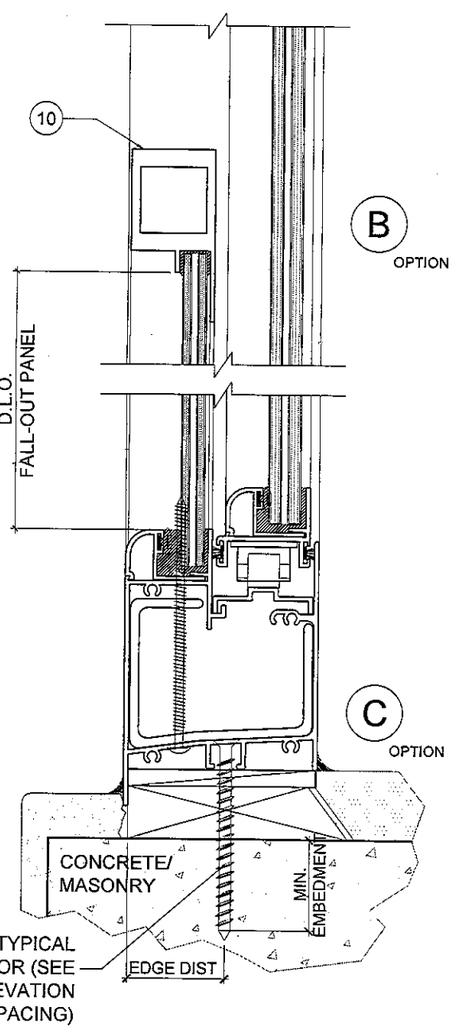

SECTION W. FALL-OUT PANEL

OPTIONAL

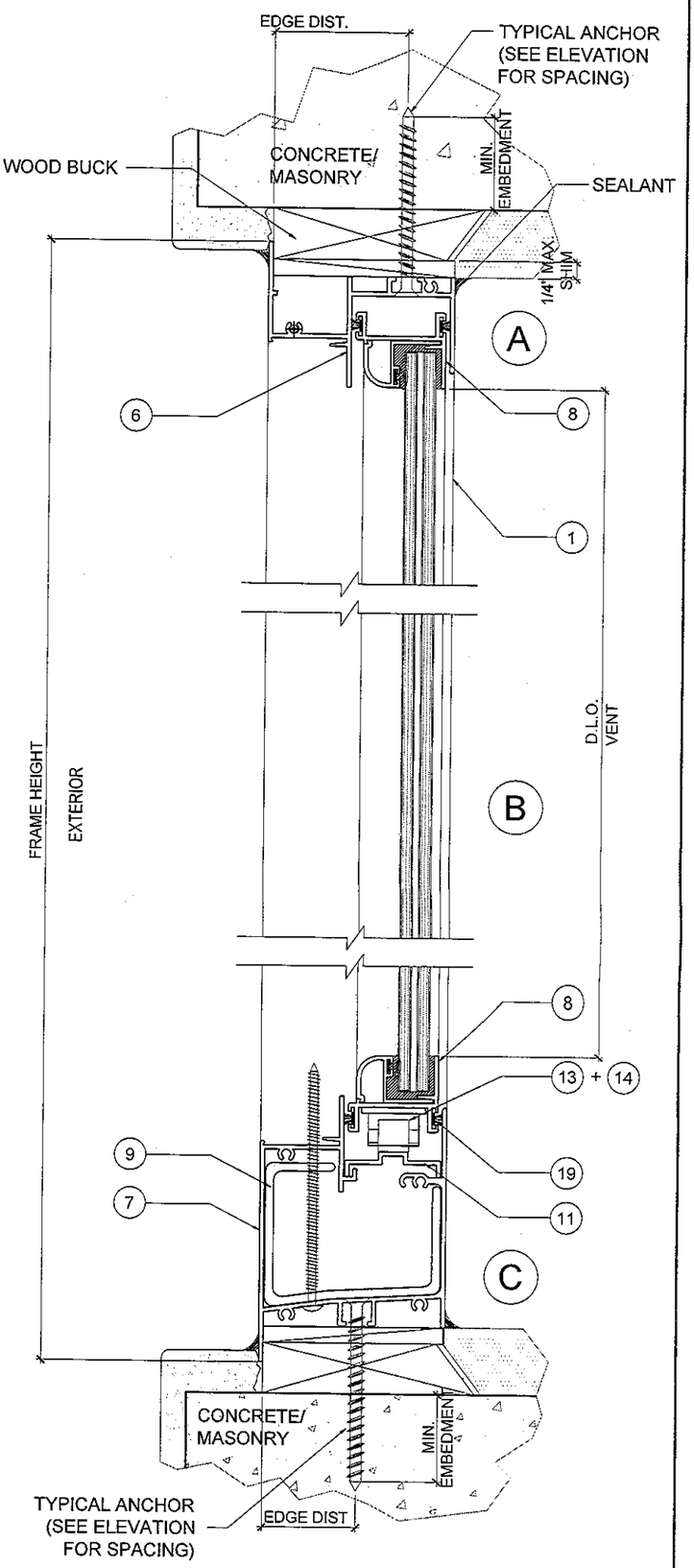

TYPICAL SECTION

PRODUCT REVISED
as complying with the Florida
Building Code
Acceptance No. 12-0326.08
Expiration Date Dec. 27, 2012
By
Miami Dade Product Control
MIAMI DADE COUNTY

MAR 15 2012

STATE OF FLORIDA
PROFESSIONAL ENGINEER
No 55983

SHEET 4 OF 11	DRAWING NO. AD11-11	PROJECT 11-027	DATE 04/20/11
		DRAWN S.L.	SCALE AS SHOWN

SERIES 2009 ALUM. HORIZONTAL ROLLING WINDOW - LMI

FLORIDA COASTAL IMPACT WINDOW L.L.C

940 W 84 STREET
HIALEAH, FL. 33014
P: (305) 828-8254 F: (305) 828-8255

MCY ENGINEERING, INC.
GLAZING CONSULTANTS
8501 SW 124 AVE. STE. 205A P: 305.271.0117
MIAMI, FL. 33183 F: 786.573.5063
www.MCYEngineering.com MCY.Engineering@Att.net

REVISIONS		
NO.	DATE	DESCRIPTION
1	3/15/12	UPDATE TO 2010 FBC

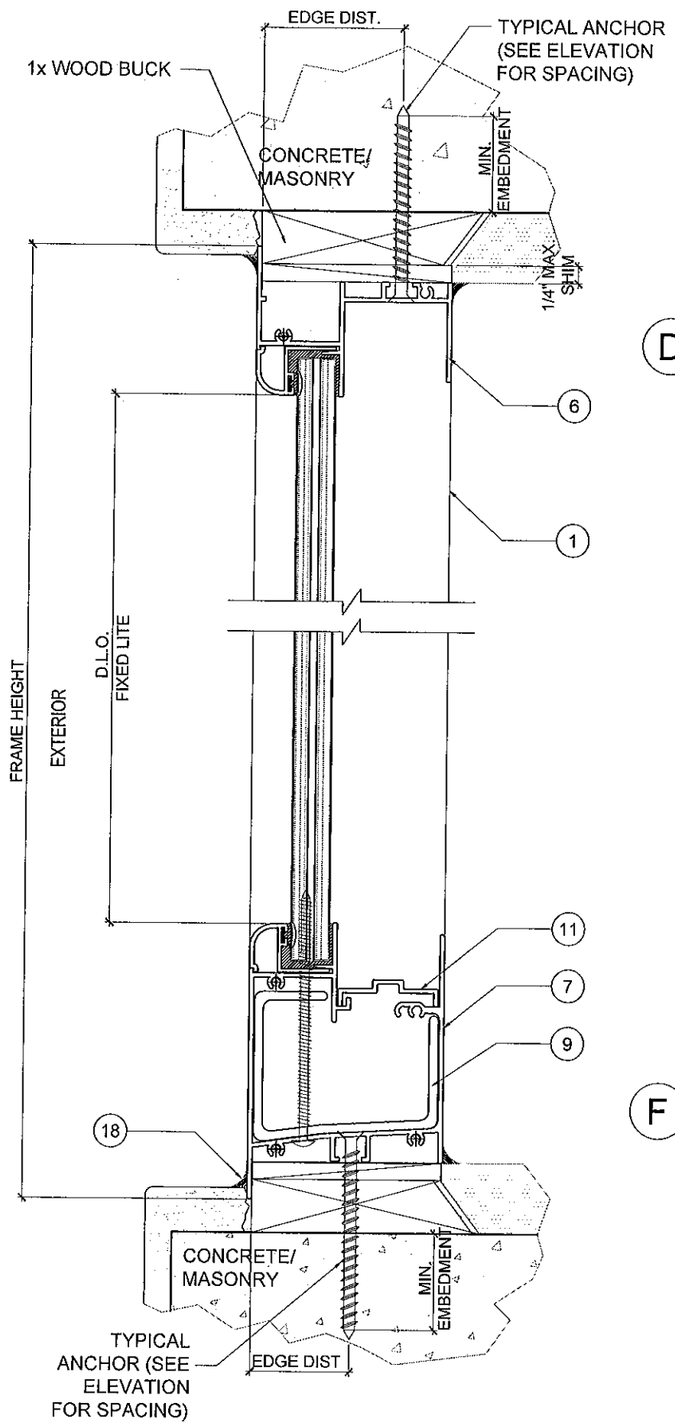

D

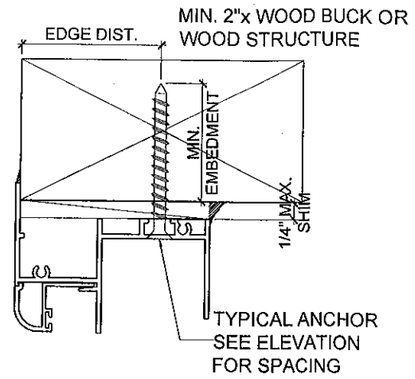

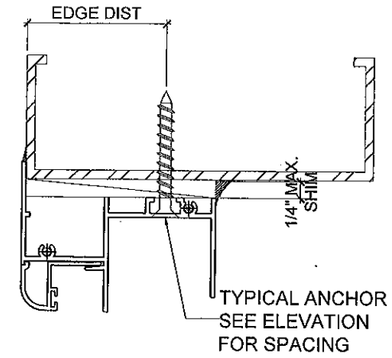

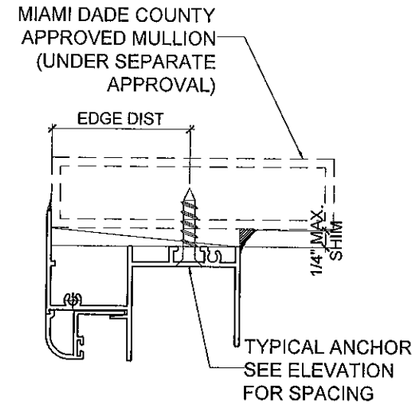

F

TYPICAL ANCHORS: (SEE ELEV. FOR SPACING)

TYPE 'A' - **1/4" DIA. HILTI KWIK-CON II** (Fu = 177 KSI, Fy = 155 KSI)
- INTO 2BY WOOD BUCKS OR WOOD STRUCTURE
  1-1/2" MIN. PENETRATION INTO WOOD
- THRU 1BY BUCKS INTO CONC. OR MASONRY
  1-5/8" MIN. EMBED INTO CONC. OR MASONRY

TYPE 'B' - **1/4" DIA. TEKS OR SELF DRILLING SCREWS**

- INTO METAL STRUCTURES
  STEEL : 1/8" MIN. (Fy = 36 KSI MIN.)
  ALUMINUM : 1/8" THK. MIN. (6063-T5 MIN.)
  (STEEL IN CONTACT WITH ALUMINUM TO BE PLATED OR PAINTED)

TYPE 'C' - **#14 SMS OR SELF DRILLING SCREWS (GRADE 2 CRS)**

- INTO APPROVED ALUMINUM MULLIONS MIN. 1/8" THK.

MASONRY
- ASTM C90 GROUT FILLED CONCRETE BLOCK
- HOLLOW CONCRETE BLOCK

CONCRETE
- f'c= 3,000 PSI MIN.

ANCHOR EDGE DISTANCES
INTO CONCRETE AND MASONRY = 1-3/8" MIN.
INTO WOOD STRUCTURE = 1" MIN.
INTO METAL STRUCURE = 3/4" MIN.

ALL ANCHOR OPTIONS CAN APPLY TO HEAD, SILL AND JAMB ANCHORS.

WEEPHOLES (WP):

1-1/2" x 1/4" WEEPHOLE WITH NYLON BAFFLE @ FRAME SILL ON EXTERIOR 1 PER PANEL. 3-1/4" FROM FRAME CORNER AND ONE AT MIDDLE OF CENTER PANEL.

SEALANT (REFER TO SHEET 8 OF 11):

PERIMETER OF FRAME ON THE INTERIOR, FRAME CORNERS, GLAZING BEAD SEAMS AT EACH END, FIXED MEETING RAIL AT EACH END, INSTALLATION FASTENERS AT FRAME SILL & EACH END OF FRAME SILL TRACK.

HARDWARE:

ELEVATION A & B
(4) SURFACE MOUNT METALLIC CAM LOCKS @ 10 1/4" FROM EACH END LOCATED AT VENT LOCK RAILS

(4) TANDEM METALLIC WHEELS IN PLASTIC HOUSING @ 2 1/4" FROM EACH END LOCATED AT VENT BOTT

ELEVATION C, D & E
(2) SURFACE MOUNT METALLIC CAM LOCKS AT VENT MEETING RAIL ONE AT EACH VENT @ 34 1/4" FROM BOTTOM.

(4) TANDEM METALLIC WHEELS IN NYLON HOUSING ONE AT EACH END OF EACH VENT BOTTOM RAILS

MAR 15 2012

PRODUCT REVISED
as complying with the Florida Building Code
Acceptance No 12-0326.08
Expiration Date Dec. 27, 2012
By Miami Dade Product Control
MIAMI DADE COUNTY

YIPING WANG
FLORIDA REGISTRATION
PE #55983
C.A.N. 28873
No 55983
STATE OF FLORIDA
PROFESSIONAL ENGINEER

REVISIONS		
NO.	DATE	DESCRIPTION
1	3/15/12	UPDATE TO 2010 FBC

MCY ENGINEERING, INC.
GLAZING CONSULTANTS
8501 SW 124 AVE. STE. 205A P: 305.271.0117
MIAMI, FL 33183 F: 786.573.5063
www.MCYEngineering.com MCY.Engineering@Att.net

SERIES 2009 ALUM. HORIZONTAL ROLLING WINDOW - LMI

FLORIDA COASTAL IMPACT WINDOW L.L.C
940 W 84 STREET
HIALEAH, FL. 33014
P: (305) 828-8254 F: (305) 828-8255

DATE	04/20/11
SCALE	AS SHOWN
DRAWN	S. L.
PROJECT	11-027
DRAWING NO.	AD11-11

SHEET 5 OF 11

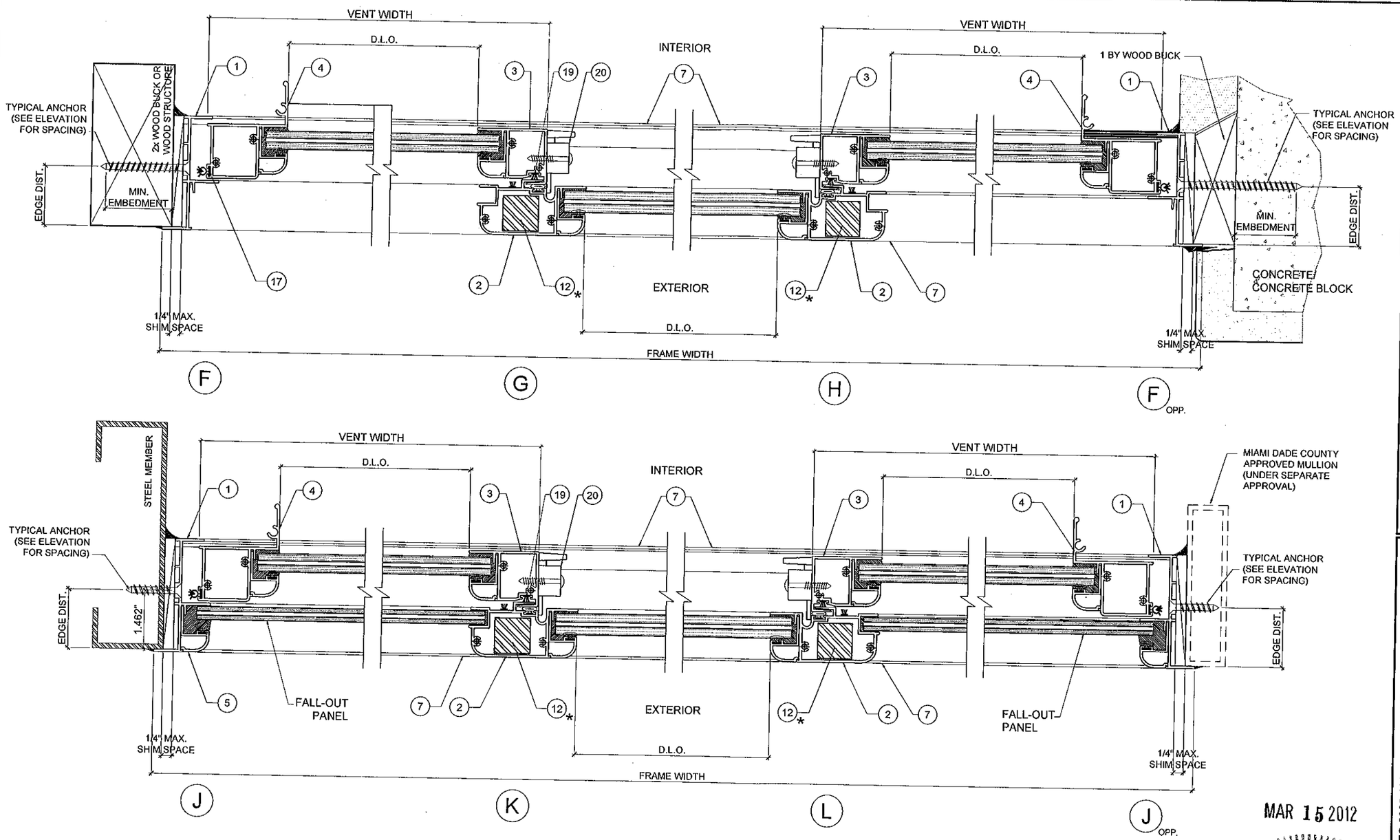

* REINFORCEMENT APPLIED FOR ELEVATION C, D & E ONLY

MAR 15 2012

PRODUCT REVISED
as complying with the Florida Building Code
Acceptance No 12-0324.08
Expiration Date Dec 27, 2012
By Manuel Perez
Miami Dade Product Control

MIAMI DADE COUNTY

YIPING WANG
LICENSE
YIPING WANG, P.E.
FLORIDA REGISTRATION
PE #55983
C.A.N. 28028
No 55983
STATE OF FLORIDA
PROFESSIONAL ENGINEER

REVISIONS		
NO	DATE	DESCRIPTION
1	9/15/12	UPDATE TO 2010 FBC

MCY ENGINEERING, INC.
GLAZING CONSULTANTS
8501 SW 124 AVE. STE. 205A P: 305.271.0117
MIAMI, FL. 33183 F: 786.573.5063
www.MCYEngineering.com MCY.Engineering@Att.net

SERIES 2009 ALUM. HORIZONTAL ROLLING WINDOW - LMI

FLORIDA COASTAL IMPACT WINDOW L.L.C

940 W 84 STREET
HIALEAH, FL 33014
P: (305) 828-8254 F: (305) 828-8255

DATE	04/20/11
SCALE	AS SHOWN
DRAWN	S. L.
PROJECT	11-027
DRAWING NO.	AD11-11

SHEET 6 OF 11

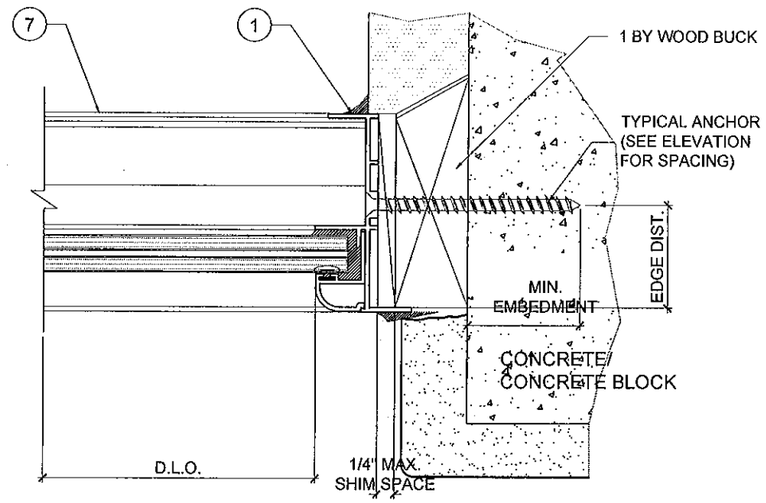

M

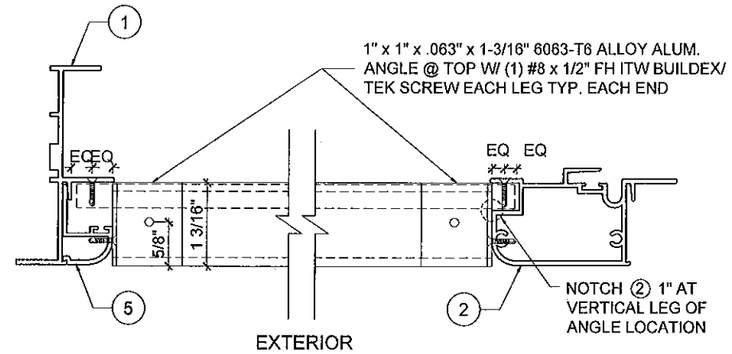

TOP RAIL @ FALL-OUT
PANEL PLAN VIEW

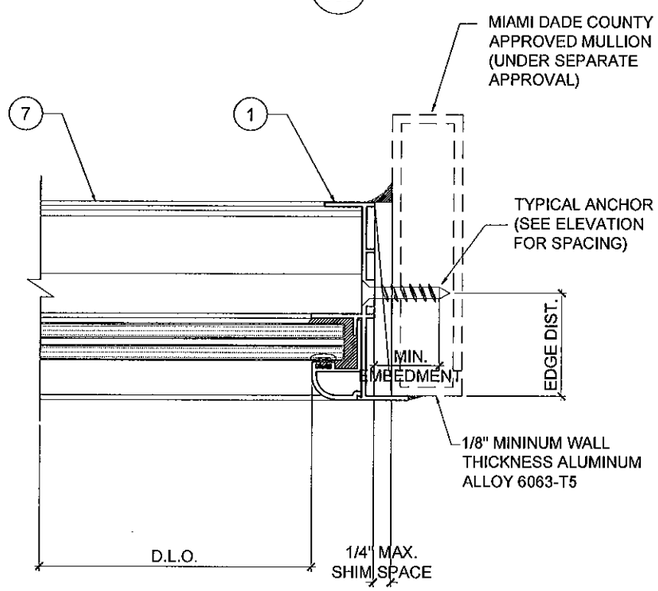

N

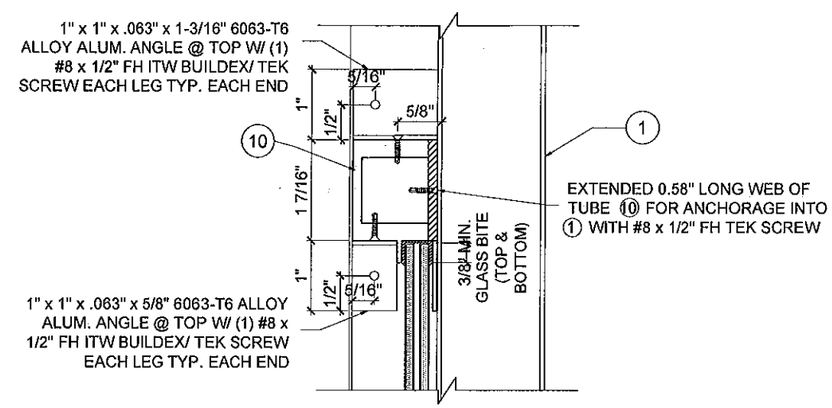

TOP RAIL @ FALL-OUT
PANEL SECTION VIEW

MAR 15 2012

* NOTE: FALL-OUT PANEL IS REQ'D WHEN SILL ELEVATION IN RESPECT TO THE NEAR SIDE WALKING SURFACE IS LESS THAN 42". (SEE DETAIL ON SHEET 9 OF 11)

* REINFORCEMENT APPLIED FOR ELEVATION C, D & E ONLY

PRODUCT REVISED
as complying with the Florida Building Code
Acceptance No 12-0326.08
Expiration Date Dec. 27, 2012
By Manuel Perez
Miami Dade Product Control
MIAMI DADE COUNTY

YIPING WANG, P.E.
FLORIDA REGISTRATION
PE #55983
C.A.N. 28677
STATE OF FLORIDA
PROFESSIONAL ENGINEER

REVISIONS

NO.	DATE	DESCRIPTION
1	3/15/12	UPDATE TO 2010 FBC

MCY ENGINEERING, INC.
GLAZING CONSULTANTS
8501 SW 124 AVE. STE. 205A P: 305.271.0117
MIAMI, FL 33183 F: 786.573.5063
www.MCYEngineering.com MCY.Engineering@Att.net

SERIES 2009 ALUM. HORIZONTAL ROLLING WINDOW - LMI
FLORIDA COASTAL IMPACT WINDOW L.L.C
940 W 84 STREET
HIALEAH, FL. 33014
P: (305) 828-8254 F: (305) 828-8255

DATE	04/20/11
SCALE	AS SHOWN
DRAWN	S. L.
PROJECT	11-027

DRAWING NO.
AD11-11

SHEET 7 OF 11

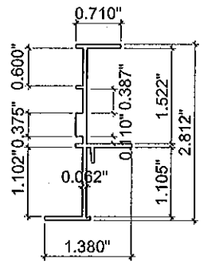

1 FRAME JAMB
FSP 014 6063-T6

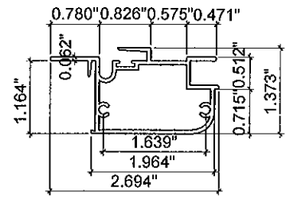

2 FIXED MEETING STILE
FSP 041 6063-T6

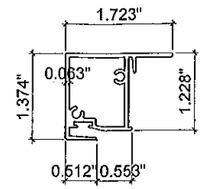

3 SASH MEETING STILE
FSP 018 6063-T6

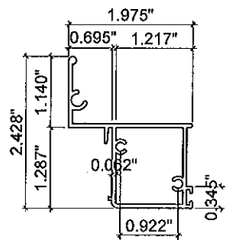

4 SASH TILE
FSP 020 6063-T6

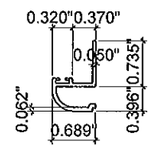

5 GLAZING BEAD
FSP 017 6063-T6

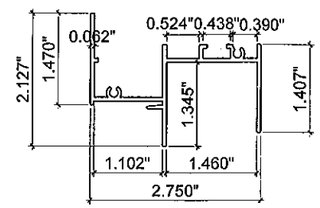

6 FRAME HEAD
FSP 015 6063-T6

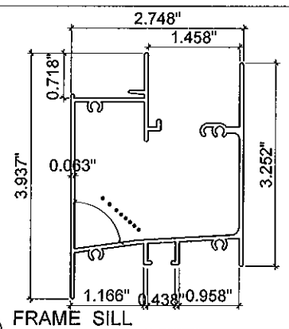

7 FRAME SILL
FSP 039 6063-T6

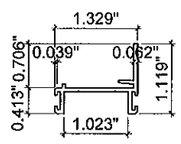

8 SASH TOP & BOTTOM RAIL
FSP 045 6063-T6

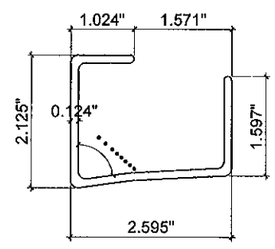

9 ROTATING CLIP, 12" LONG
FSP 055 6063-T6

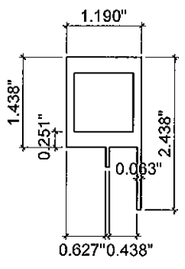

10 FALL OUT PANEL TOP RAIL
6063-T6

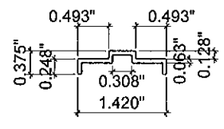

11 INSERT TRACK
6063-T6

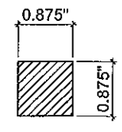

12 REINFORCEMENT FOR ② CONT.
STEEL ASTM A-36 ZINC PLATED

BILL OF MATERIALS

ITEM #	QTY.	PROFILE	DESCRIPTION	MATERIAL	MANUFACTURER/ REMARKS
1	2 PER FRAME	FSP 014	FRAME JAMB	ALUM. 6063-T6	---
2	1 PER VENT	FSP 041	FIXED MEETING STILE	ALUM. 6063-T6	---
3	1 PER VENT	FSP 018	SASH MEETING STILE	ALUM. 6063-T6	---
4	1 PER VENT	FSP 020	SASH STILE	ALUM. 6063-T6	---
5	AS REQD.	FSP 017	GLAZING BEAD	ALUM. 6063-T6	---
6	1 PER PANEL	FSP 015	FRAME HEAD	ALUM. 6063-T6	---
7	1 PER PANEL	FSP 039	FRAME SILL	ALUM. 6063-T6	---
8	2 PER PANEL	FSP 045	SASH TOP & BOTTOM RAIL	ALUM. 6063-T6	---
9	1 PER PANEL	FSP 055	ROTATING CLIP (12" LONG)	ALUM. 6063-T6	---
10	1 PER F.O.P.	-	FALL OUT PANEL TOP RAIL	ALUM. 6063-T6	---
11	1 PER VENT	-	INSERT TRACK	ALUM. 6063-T6	---
12	AS REQD.	-	INSERT FOR FIXED MEETING STILE CONT.	STEEL	Fy = 36 ksi
13	AS REQD.	-	ROLLER HOUSING	NYLON	---
14	4 PER SASH	-	WHEELS (7/16" DIAMETER LONG)	---	2 1/4" FROM EACH END OF VENT BOTTOM RAIL WITH #8 PH SDS
15	AS REQD.	FSP 016	LATCH LOCK (CAM LOCK)	ZINC ALLOY	ATTACHED WITH (2) #8 x 1" FH SMS
16	AS REQD.	STRUCTURAL SILICONE	GE SCS2600 OR PECORA 895	SILICONE	
17	AS REQD.	-	VINYL BULB WITH MULTI FLAP	---	DUROMETER SHORE A 64
18	AS REQD.	STRUCTURAL SILICONE	DOW CORNING 899	SILICONE	DOW CORNING
19	AS REQD.	GASKET	5/16" DIAMETER ADHESIVE SPONGE GASKET	---	---

MAR 15 2012

PRODUCT REVISED
as complying with the Florida Building Code
Acceptance No 12-0326.09
Expiration Date Dec. 27, 2012
By Manuel Perez
Miami-Dade Product Control

MIAMI DADE COUNTY

YIPING WANG
LICENSED
YIPING WANG, P.E.
FLORIDA REGISTRATION
PE #55983
NOA NO. 12067.9
STATE OF FLORIDA
PROFESSIONAL ENGINEER

REVISIONS

NO	DATE	DESCRIPTION
1	3/15/12	UPDATE TO 2010 FBC

MCY ENGINEERING, INC.
GLAZING CONSULTANTS
8501 SW 124 AVE. STE. 205A P: 305.271.0117
MIAMI, FL 33183 F: 786.573.5063
www.MCYEngineering.com MCY.Engineering@Att.net

SERIES 2009 ALUM. HORIZONTAL ROLLING WINDOW - LMI

FLORIDA COASTAL IMPACT WINDOW L.L.C
940 W 84 STREET
HIALEAH, FL. 33014
P: (305) 828-8254 F: (305) 828-8255

DATE	04/20/11
SCALE	AS SHOWN
DRAWN	S. L.
PROJECT	11-027

DRAWING NO.
AD11-11

SHEET 8 OF 11

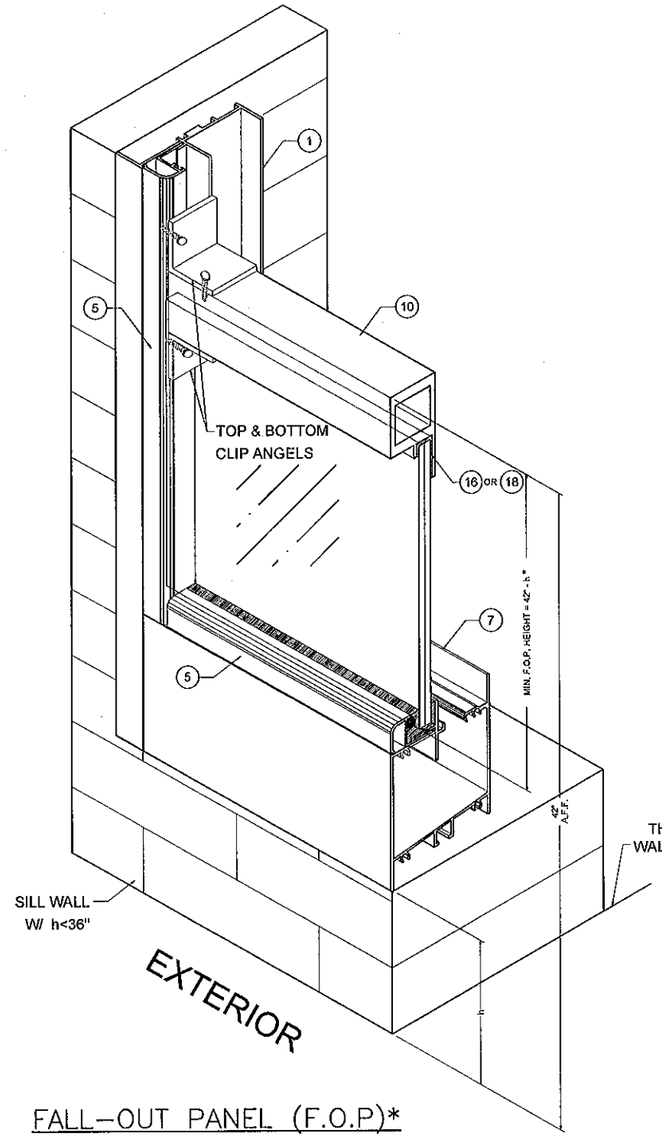

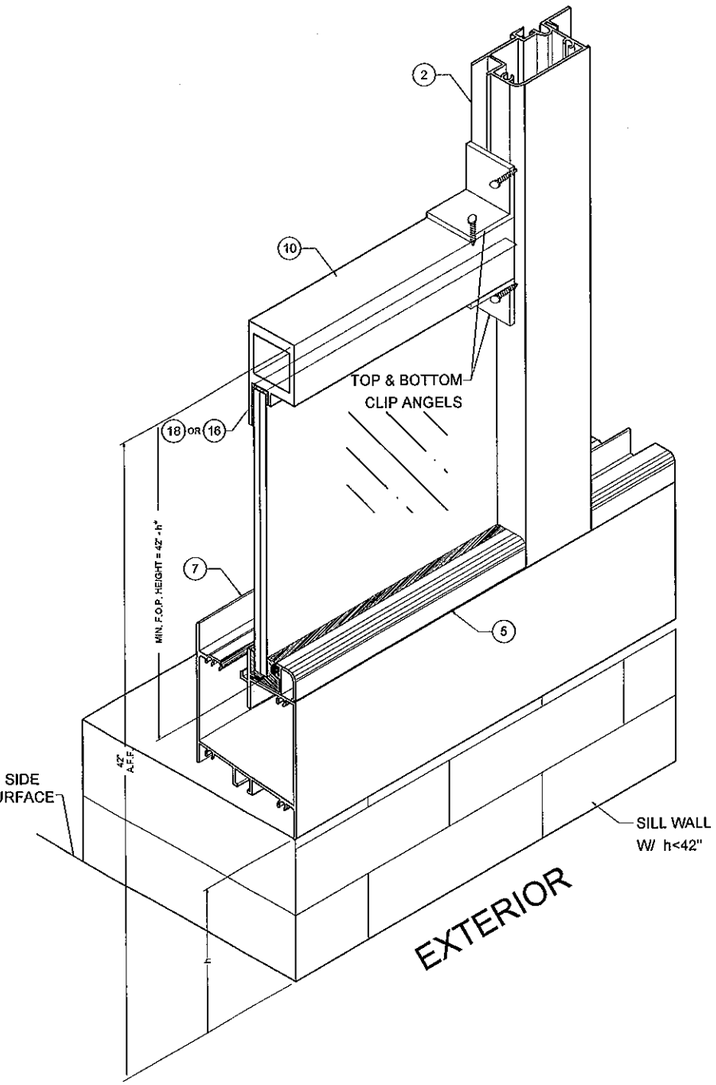

FALL-OUT PANEL (F.O.P)*

ONLY F.O.P. ASSEMBLY IS SHOWN, REMAINING COMPONENTS OF WINDOW SILL NOT SHOWN FOR CLARITY.

* NOTE: FALL-OUT PANEL IS REQ'D WHEN SILL ELEVATION IN RESPECT TO THE NEAR SIDE WALKING SURFACE IS LESS THAN 42". (SEE DETAIL ON SHEET 7 OF 11)

MAR 15 2012

PRODUCT REVISED
as complying with the Florida Building Code
Acceptance No 12-0326.08
Expiration Date DEC. 27, 2012
By Manuel Perez
Miami Dade Product Control
MIAMI DADE COUNTY

YIPING WANG
YIPING WANG, P.E.
FLORIDA REGISTRATION
PE #65983
NOC.R.N. 28677
STATE OF FLORIDA
PROFESSIONAL ENGINEER

REVISIONS		
NO.	DATE	DESCRIPTION
1	3/15/12	UPDATE TO 2010 FBC

MCY ENGINEERING, INC.
GLAZING CONSULTANTS
8501 SW 124 AVE. STE. 205A P: 305.271.0117
MIAMI, FL. 33183 F: 786.573.5063
www.MCYEngineering.com MCY.Engineering@Att.net

SERIES 2009 ALUM. HORIZONTAL ROLLING WINDOW - LMI

FLORIDA COASTAL IMPACT WINDOW L.L.C
940 W 84 STREET
HIALEAH, FL. 33014
P: (305) 828-8254 F: (305) 828-8255

DATE	04/20/11
SCALE	AS SHOWN
DRAWN	S. L.
PROJECT	11-027

DRAWING NO.
AD11-11

SHEET 9 OF 11

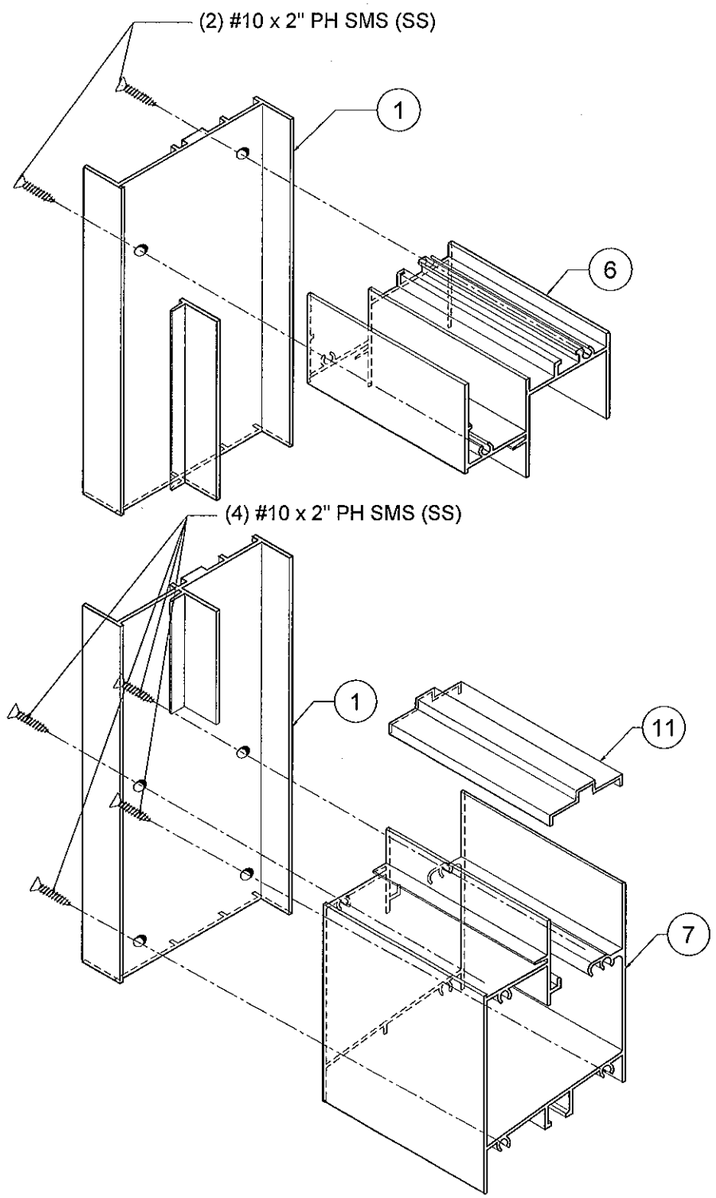

JAMB CONNECTION
TO FRAME HEAD & SILL

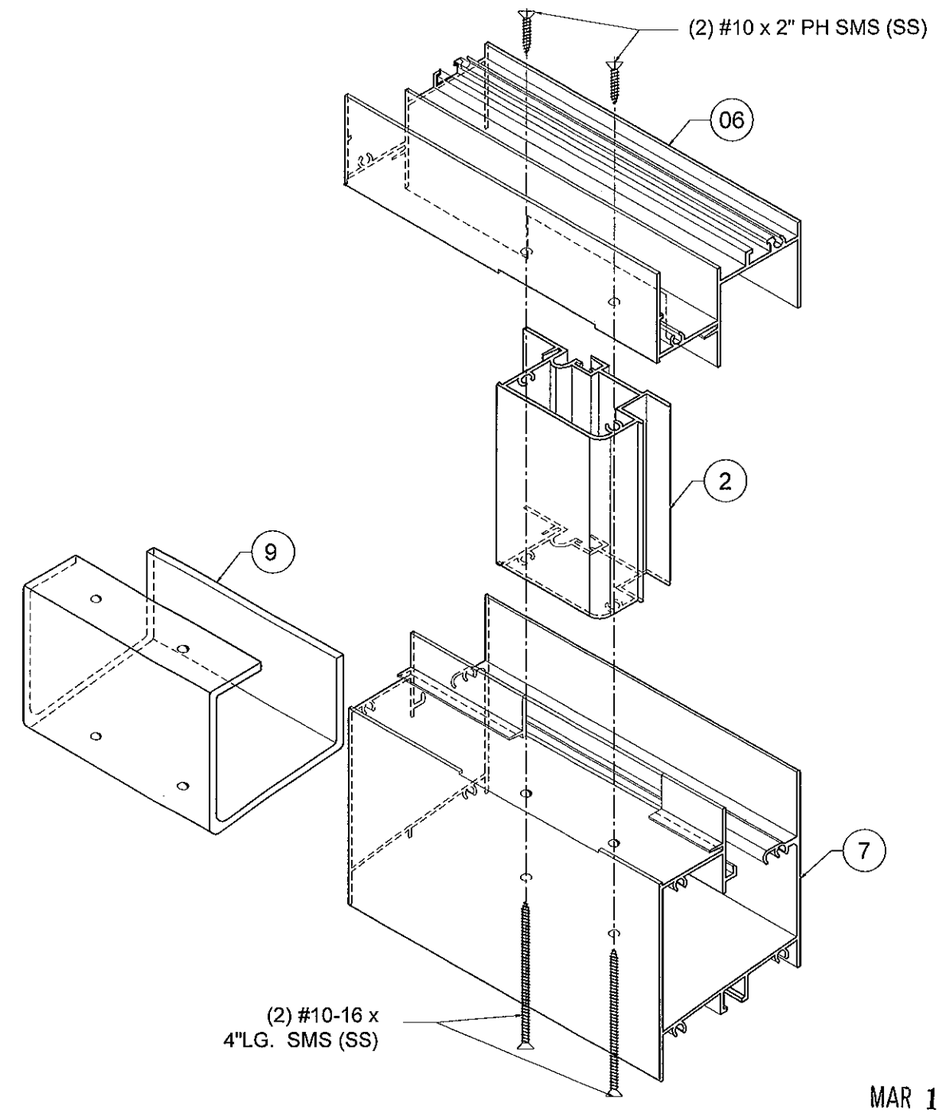

MEETING RAIL CONNECTION
TO FRAME HEAD & SILL

MAR 15 2012

PRODUCT REVISED
as complying with the Florida
Building Code
Acceptance No 12-0326.08
Expiration Date Dec. 27, 2012
By Manuel Perez
Miami Dade Product Control

MIAMI DADE COUNTY

YIQING WANG
YIQING WANG, P.E.
FLORIDA REGISTRATION
P.E. #55983
C.A.N. 28673
No 55983
STATE OF FLORIDA
PROFESSIONAL ENGINEER

REVISIONS

NO	DATE	DESCRIPTION
1	3/15/12	UPDATE TO 2010 FBC

MCY ENGINEERING, INC.
GLAZING CONSULTANTS
8501 SW 124 AVE. STE. 205A P: 305.271.0117
MIAMI, FL 33183 F: 786.573.5063
www.MCYEngineering.com MCY.Engineering@Att.net

SERIES 2009 ALUM. HORIZONTAL ROLLING WINDOW - LMI

FLORIDA COASTAL IMPACT WINDOW L.L.C
940 W 84 STREET
HIALEAH, FL 33014
P: (305) 828-8254 F: (305) 828-8255

DATE	04/20/11
SCALE	AS SHOWN
DRAWN	S. L.
PROJECT	11-027
DRAWING NO.	AD11-11

SHEET 10 OF 11

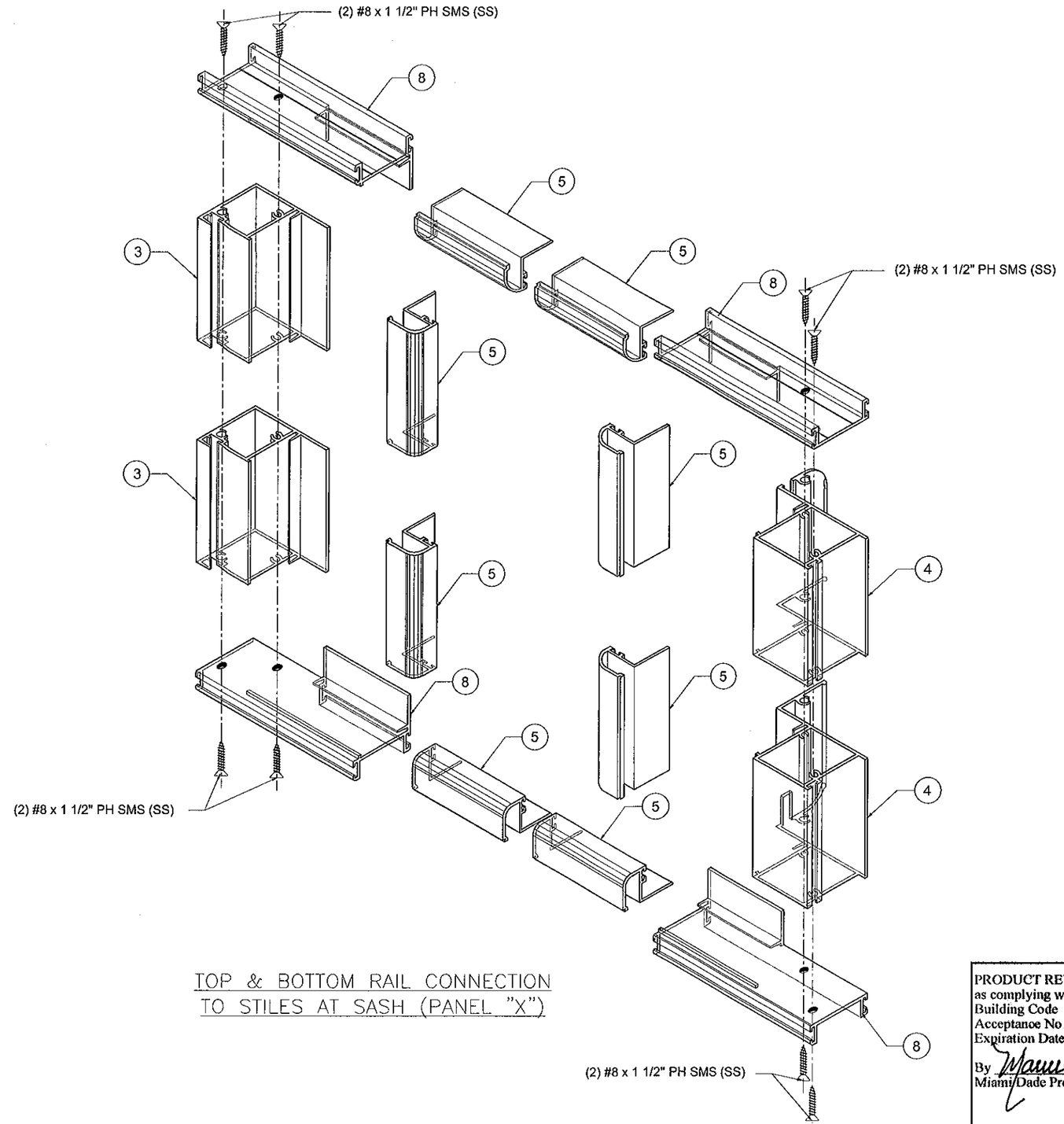

TOP & BOTTOM RAIL CONNECTION
TO STILES AT SASH (PANEL "X")

MAR 15 2012

PRODUCT REVISED
as complying with the Florida
Building Code
Acceptance No 12-0326.08
Expiration Date Dec. 27, 2012
By Manuel Perez
Miami Dade Product Control

MIAMI DADE COUNTY

YIPING WANG, P.E.
FLORIDA REGISTRATION
PE #55983
C.A.N. 26677
STATE OF FLORIDA
PROFESSIONAL ENGINEER

REVISIONS		
NO.	DATE	DESCRIPTION
1	3/15/12	UPDATE TO 2010 FBC

MCY ENGINEERING, INC.
GLAZING CONSULTANTS
8501 SW 124 AVE. STE. 205A P: 305.271.0117
MIAMI, FL 33183 F: 786.573.5063
www.MCYEngineering.com MCY.Engineering@Att.net

SERIES 2009 ALUM. HORIZONTAL ROLLING WINDOW - LMI
FLORIDA COASTAL IMPACT WINDOW L.L.C
940 W 84 STREET
HIALEAH, FL. 33014
P: (305) 828-8254 F: (305) 828-8255

DATE	04/20/11
SCALE	AS SHOWN
DRAWN	S. L.
PROJECT	11-027

DRAWING NO.
AD11-11

SHEET 11 OF 11