MIAMI-DADE COUNTY
DEPARTMENT OF PERMITTING, ENVIRONMENT, AND REGULATORY AFFAIRS (PERA)
BOARD AND CODE ADMINISTRATION DIVISION

MIAMI-DADE COUNTY
PRODUCT CONTROL SECTION
11805 SW 26 Street, Room 208
Miami, Florida 33175-2474
T (786) 315-2590 F (786) 315-2599
www.miamidade.gov/pera

NOTICE OF ACCEPTANCE (NOA)

Mr. Glass Doors & Windows, Inc.
7440 NW 66th Street
Miami, FL 33166

SCOPE:

This NOA is being issued under the applicable rules and regulations governing the use of construction materials. The documentation submitted has been reviewed and accepted by Miami-Dade County PERA - Product Control Section to be used in Miami Dade County and other areas where allowed by the Authority Having Jurisdiction (AHJ).

This NOA shall not be valid after the expiration date stated below. The Miami-Dade County Product Control Section (In Miami Dade County) and/or the AHJ (in areas other than Miami Dade County) reserve the right to have this product or material tested for quality assurance purposes. If this product or material fails to perform in the accepted manner, the manufacturer will incur the expense of such testing and the AHJ may immediately revoke, modify, or suspend the use of such product or material within their jurisdiction. PERA reserves the right to revoke this acceptance, if it is determined by Miami-Dade County Product Control Section that this product or material fails to meet the requirements of the applicable building code.

This product is approved as described herein, and has been designed to comply with the Florida Building Code, including the High Velocity Hurricane Zone.

DESCRIPTION: Series "MG5000" Aluminum Window Wall System – L.M.I.

APPROVAL DOCUMENT: Drawing No. **W11–39**, titled "Series MG5000 Alum. Window Wall System (L.M.I.)", sheets 1 through 12 of 12, dated 07/15/11, with revision A dated 03/05/12, prepared by Al-Farooq Corporation, signed and sealed by Javad Ahmad, P.E., bearing the Miami-Dade County Product Control Revision stamp with the Notice of Acceptance number and expiration date by the Miami-Dade County Product Control Section.

MISSILE IMPACT RATING: Large and Small Missile Impact Resistant

LABELING: Each unit shall bear a permanent label with the manufacturer's name or logo, city, state, model/series, and following statement: "Miami-Dade County Product Control Approved", unless otherwise noted herein.

RENEWAL of this NOA shall be considered after a renewal application has been filed and there has been no change in the applicable building code negatively affecting the performance of this product.

TERMINATION of this NOA will occur after the expiration date or if there has been a revision or change in the materials, use, and/or manufacture of the product or process. Misuse of this NOA as an endorsement of any product, for sales, advertising or any other purposes shall automatically terminate this NOA. Failure to comply with any section of this NOA shall be cause for termination and removal of NOA.

ADVERTISEMENT: The NOA number preceded by the words Miami-Dade County, Florida, and followed by the expiration date may be displayed in advertising literature. If any portion of the NOA is displayed, then it shall be done in its entirety.

INSPECTION: A copy of this entire NOA shall be provided to the user by the manufacturer or its distributors and shall be available for inspection at the job site at the request of the Building Official.

This NOA **revises NOA # 11-0720.09** and consists of this page 1 and evidence pages E-1 and E-2, as well as approval document mentioned above.

The submitted documentation was reviewed by **Manuel Perez, P.E.**

MIAMI-DADE COUNTY APPROVED

5/25/12

NOTICE OF ACCEPTANCE: EVIDENCE SUBMITTED

A. DRAWINGS

1. Manufacturer's die drawings and sections.
2. Drawing No. **W11-39**, titled "Series MG5000 Alum Window Wall System (L.M.I.)" Sheets 1 through 12 of 12, dated 07/15/11, with revision A dated 03/05/12, prepared by Al-Farooq Corporation, signed and sealed by Javad Ahmad, P.E.

B. TESTS

1. Test reports on: 1) Air Infiltration Test, per FBC, TAS 202-94
   2) Uniform Static Air Pressure Test, Loading per FBC TAS 202-94
   3) Water Resistance Test, per FBC, TAS 202-94
   4) Large Missile Impact Test per FBC, TAS 201-94
   5) Cyclic Wind Pressure Loading per FBC, TAS 203-94

   along with marked-up drawings and installation diagram of an aluminum window wall system, prepared by Fenestration Testing Laboratory, Inc., Test Report No. **FTL-5447**, dated 12/19/07, signed and sealed by Michael R. Wenzel, P.E.
   (Submitted under previous NOA # 08-1114.16)

C. CALCULATIONS:

1. Anchor verification calculations and structural analysis, complying with FBC-2004 and FBC 2007, prepared by Al–Farooq Corporation, dated 09/02/08, signed and sealed by Humayoun Farooq, P. E.
   (Submitted under previous NOA#11-0720.09)
2. Glazing complies with ASTM E1300-04

D. QUALITY ASSURANCE

1. Miami-Dade Department of Permitting, Environment, and Regulatory Affairs (PERA)

E. MATERIAL CERTIFICATIONS

1. Notice of Acceptance No. **11–0624.02** issued to **E.I. DuPont DeNemours & Co.**, Inc. for their "**DuPont SentryGlas® Interlayer**" dated 08/25/11, expiring on 01/14/17.
2. Notice of Acceptance No. **11–0624.01** issued to **E.I. DuPont DeNemours & Co., Inc.** for their **"DuPont Butacite® PVB Interlayer"** dated 09/08/11, expiring on 12/11/16.

Manuel Perez, P.E.
Product Control Examiner
NOA No. 12-0328.06
Expiration Date: April 03, 2013
Approval Date: June 07, 2012

NOTICE OF ACCEPTANCE: EVIDENCE SUBMITTED

F. STATEMENTS

1. Statement letter of conformance, complying with FBC-2010, and of no financial interest, dated March 05, 2012, signed and sealed by Javad Ahmad, P.E.

G. OTHER

1. Notice of Acceptance No. **11-0720.09**, issued to Mr. Glass Doors & Windows, Inc. for their Series "MG5000" Aluminum Window Wall System – L.M.I., approved on 09/15/11 and expiring on 04/03/13.

Manuel Perez, P.E.
Product Control Examiner
NOA No. 12-0328.06
Expiration Date: April 03, 2013
Approval Date: June 07, 2012

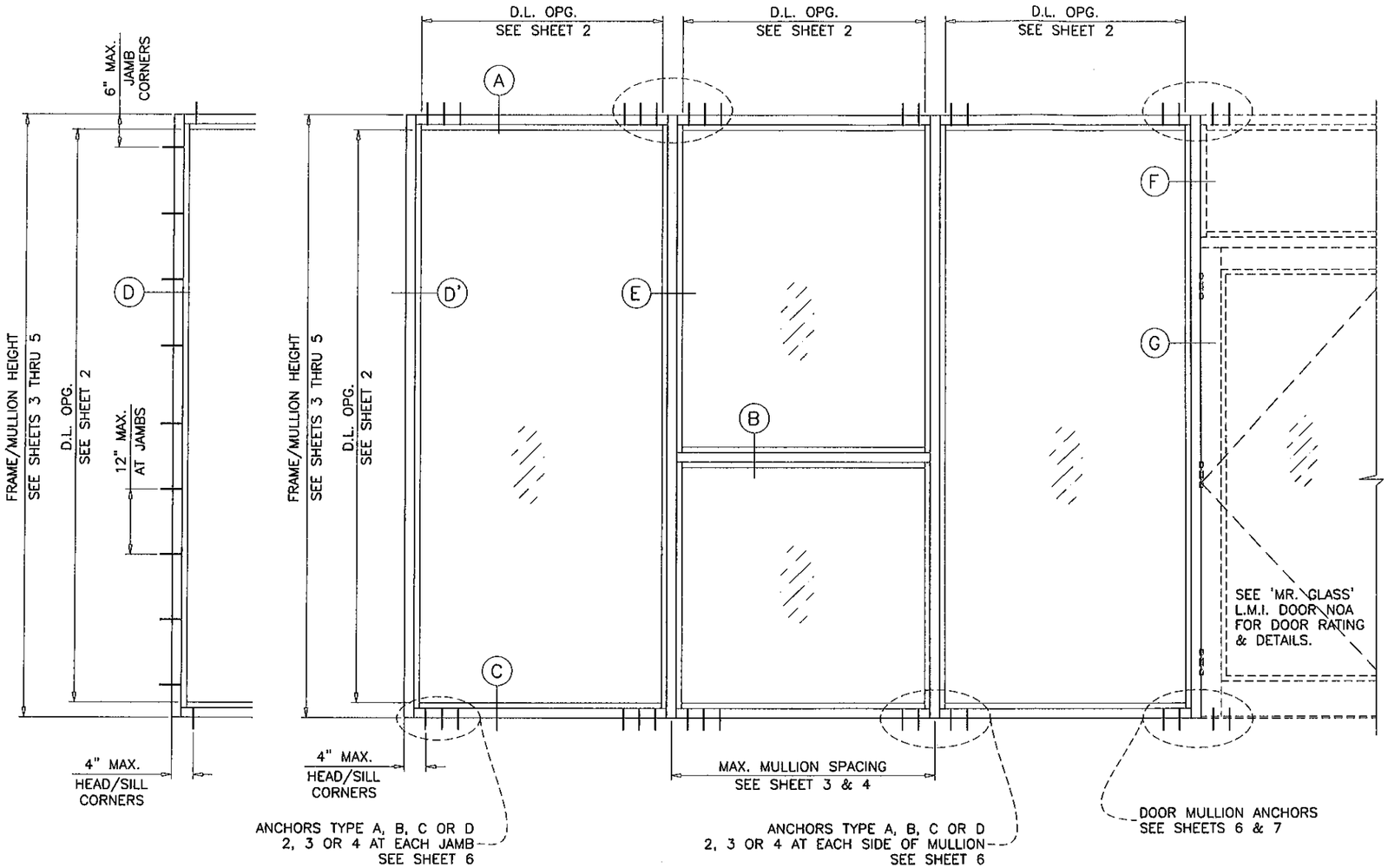

TYPICAL ELEVATION

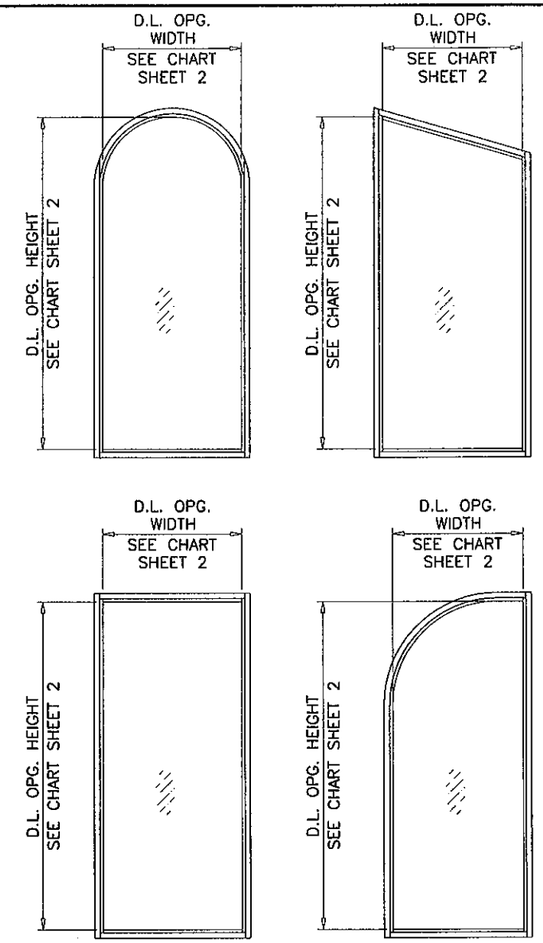

ALLOWABLE LOADS FOR ALTERNATE SHAPES AS SHOWN ABOVE OR SIMILAR CAN BE VERIFIED BY INSCRIBING PICTURE WINDOW SHAPE WITHIN SQUARE OR RECTANGLE AS SHOWN IN DOTTED LINES AND OBTAINING ALLOWABLE LOADS FROM THOSE SHAPES. SINGLE LITES MAY BE INSTALLED VERTICALLY AS SHOWN ABOVE OR HORIZONTALLY.

SERIES MG5000 ALUMINUM WINDOW WALL SYSTEM

THIS SYSTEM IS RATED FOR LARGE MISSILE IMPACT
SHUTTERS ARE NOT REQUIRED.

CODE REQUIREMENTS FOR SAFEGUARDS MUST BE OBSERVED.

THIS PRODUCT HAS BEEN DESIGNED AND TESTED TO COMPLY WITH THE REQUIREMENTS OF THE FLORIDA BUILDING CODE INCLUDING HIGH VELOCITY HURRICANE ZONE (HVHZ).

WOOD BUCKS BY OTHERS, MUST BE ANCHORED PROPERLY TO TRANSFER LOADS TO THE STRUCTURE.

ANCHORS SHALL BE AS LISTED, SPACED AS SHOWN ON DETAILS, ANCHORS EMBEDMENT TO BASE MATERIAL SHALL BE BEYOND WALL DRESSING OR STUCCO.

ANCHORING OR LOADING CONDITIONS NOT SHOWN IN THESE DETAILS ARE NOT PART OF THIS APPROVAL.

A LOAD DURATION INCREASE IS USED IN DESIGN OF ANCHORS INTO WOOD ONLY.

MATERIALS INCLUDING BUT NOT LIMITED TO STEEL/METAL SCREWS, THAT COME INTO CONTACT WITH OTHER DISSIMILAR MATERIALS SHALL MEET THE REQUIREMENTS OF THE FLORIDA BLDG. CODE SECTION 2003.8.4.

INSTRUCTIONS:

USE CHARTS AS FOLLOWS.

STEP 1 DETERMINE DESIGN WIND LOAD REQUIREMENT BASED ON WIND VELOCITY, BLDG. HEIGHT, WIND ZONE USING APPLICABLE ASCE 7 STANDARD.

STEP 2 SEE CHARTS ON SHEET 2 FOR DESIGN LOAD CAPACITY OF DESIRED GLASS SIZE.

STEP 3 CHECK MULLION CAPACITY FOR A GIVEN SPACING AND HEIGHT USING CHARTS ON SHEETS 3 THRU 7 THE CAPACITY SHOULD EXCEED THE DESIGN LOAD.

STEP 4 USING CHARTS ON SHEETS 6 & 7 SELECT ANCHOR OPTION WITH DESIGN RATING MORE THAN DESIGN LOAD SPECIFIED IN STEP 1 ABOVE.

STEP 5 THE LOWEST VALUE RESULTING FROM STEPS 2, 3 AND 4 SHALL APPLY TO ENTIRE SYSTEM.

PRODUCT COMPLIES WITH REQUIREMENTS OF ANSI Z97.1.

LAMINATED GLASS
LARGE MISSILE IMPACT

Engr: JAVAD AHMAD
CIVIL
FLA. PE # 70592
C.A.N. 3538

PRODUCT REVISED
as complying with the Florida
Building Code
Acceptance No 12-0328.06
Expiration Date APRIL 3, 2013
By Manuel Perez
Miami Dade Product Control

MAR 07 2012

AL-FAROOQ CORPORATION
ENGINEERS & PRODUCT DEVELOPMENT
1235 S.W. 87 AVE
MIAMI, FLORIDA 33174
TEL. (305) 264-8100 FAX. (305) 262-6978

STORE\W11-39MG

SERIES MG5000 ALUM WINDOW WALL SYSTEM (L.M.I.)

MR. GLASS DOORS & WINDOWS INC.
7440 N.W. 66 STREET
MIAMI, FL. 33166
TEL. (305) 470-8284 FAX. (305) 470-8285

revisions:

no	date	by	description
A	03.05.12		UPDATED TO 2010 FBC

date: 07-15-11
scale: 1/2"=1'-0"
dr. by: HAMID
chk. by:

drawing no.
W11-39

GLASS LOAD CAPACITY – PSF			
NOMINAL DIMS.		GLASS TYPE 'A'	GLASS TYPE 'B'
D.L.O. WIDTH	D.L.O. HEIGHT	EXT.(+)/INT.(–)	EXT.(+)/INT.(–)
28"	84–1/2"	80.0	130.0
32"		80.0	130.0
36"		80.0	130.0
40"		80.0	130.0
44–1/4"		80.0	130.0
48"		80.0	130.0
52"		80.0	130.0
56–1/4"		80.0	130.0
28"	90–1/2"	80.0	130.0
32"		80.0	130.0
36"		80.0	130.0
40"		80.0	130.0
44–1/4"		80.0	130.0
48"		80.0	130.0
52"		80.0	130.0
28"	96–1/2"	80.0	130.0
32"		80.0	130.0
36"		80.0	130.0
40"		80.0	130.0
44–1/4"		80.0	130.0
48"		80.0	130.0
52"		80.0	127.2
28"	102–1/2"	80.0	130.0
32"		80.0	130.0
36"		80.0	130.0
40"		80.0	130.0
44–1/4"		80.0	130.0
48"		80.0	128.9
28"	108–1/2"	80.0	130.0
32"		80.0	130.0
36"		80.0	130.0
40"		80.0	130.0
44–1/4"		80.0	130.0
28"	114–1/2"	80.0	130.0
32"		80.0	130.0
36"		80.0	130.0
40"		80.0	130.0
44–1/4"		80.0	130.0

NOTE:
GLASS CAPACITIES ON THIS SHEET ARE BASED ON ASTM E1300–04 (3 SEC. GUSTS).

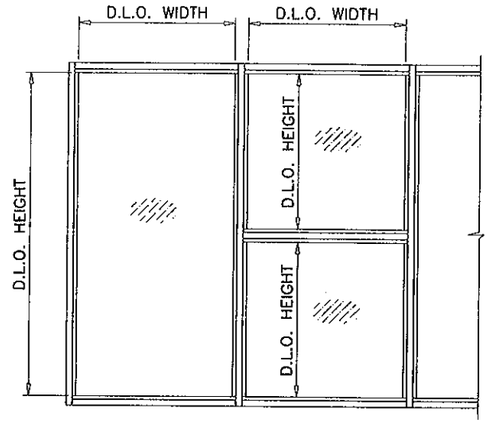

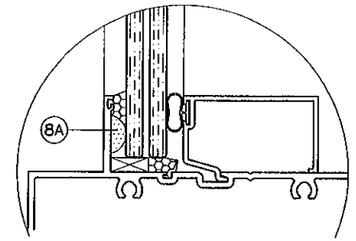

ALTERNATE BUTTON BUMPER (8A)
IN LIEU OF VINYL SPACER (8)

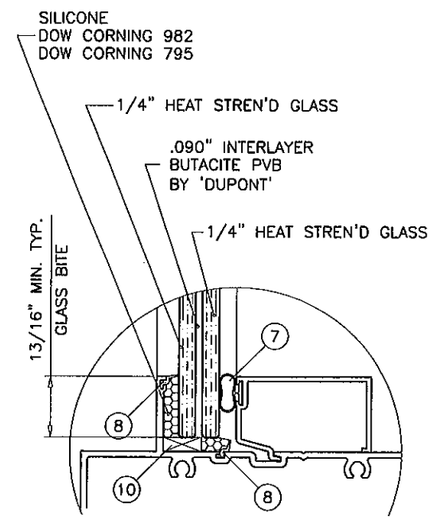

GLASS TYPE 'A'

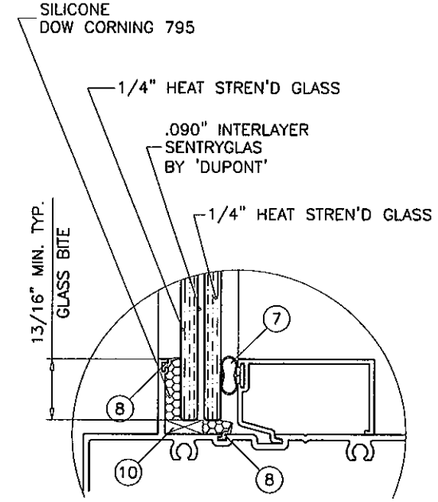

GLASS TYPE 'B'

GLAZING OPTIONS

GLASS

Engr: JAVAD AHMAD
CIVIL
FLA. PE # 70592
C.A.N. 3538

PRODUCT REVISED
as complying with the Florida
Building Code
Acceptance No 12-0328.06
Expiration Date APRIL 3, 2013
By Manuel Sirz
Miami Dade Product Control
MAR 07 2012

AL-FAROOQ CORPORATION
ENGINEERS & PRODUCT DEVELOPMENT
1235 S.W. 87 AVE
MIAMI, FLORIDA 33174
TEL. (305) 264-8100 FAX. (305) 262-6978

STORE\W11-39MG

SERIES MG5000 ALUM WINDOW WALL SYSTEM (L.M.I.)

MR. GLASS DOORS & WINDOWS INC.
7440 N.W. 66 STREET
MIAMI, FL. 33166
TEL. (305) 470-8284 FAX. (305) 470-8285

revisions:

no	date	by	description
A	03.05.12		UPDATED TO 2010 FBC

date: 07-15-11
scale: 1/2"=1'-0"
dr. by: HAMID
chk. by:

drawing no.
W11-39

MULLION LOAD CAPACITY - PSF
MULLIONS WITHOUT INTERMEDIATE HORIZONTALS

NOMINAL DIMS.		JAMB 'J1' MULL 'M1'	JAMB 'J1' MULL 'M2'	JAMB 'J2' JAMB 'J3' MULL 'M3'	JAMB 'J3' MULL 'M4,	UNANCHORED JAMB OPTIONS MULL OPTIONS
WIDTH (W)	FRAME HEIGHT	EXT. (+) INT. (-)	EXT. (+) INT. (-)	EXT. (+) INT. (-)	EXT. (+) INT. (-)	
30"	86-1/2"	130.0	130.0	130.0	130.0	
36"		130.0	130.0	130.0	130.0	
42"		130.0	130.0	130.0	130.0	
48"		130.0	130.0	130.0	130.0	
54"		130.0	130.0	130.0	130.0	
60"		130.0	130.0	130.0	130.0	
30"	90"	130.0	130.0	130.0	130.0	
36"		130.0	130.0	130.0	130.0	
42"		130.0	130.0	130.0	130.0	
48"		130.0	130.0	130.0	130.0	
54"		121.7	130.0	130.0	130.0	
60"		113.7	130.0	130.0	130.0	
30"	96"	130.0	130.0	130.0	130.0	
36"		130.0	130.0	130.0	130.0	
42"		119.9	130.0	130.0	130.0	
48"		107.5	130.0	130.0	130.0	
54"		98.4	130.0	127.9	130.0	
60"		91.5	130.0	118.4	130.0	
30"	98-1/2"	130.0	130.0	130.0	130.0	
36"		126.4	130.0	130.0	130.0	
42"		110.5	130.0	130.0	130.0	
48"		99.0	130.0	130.0	130.0	
54"		90.5	130.0	120.8	130.0	
58"		85.9	130.0	114.4	130.0	
30"	102"	130.0	130.0	130.0	130.0	
36"		113.4	130.0	130.0	130.0	
42"		99.0	130.0	130.0	130.0	
48"		88.6	130.0	123.2	130.0	
54"		80.7	129.9	111.8	130.0	
56"		78.6	126.4	108.7	129.9	
30"	108"	112.4	130.0	130.0	130.0	
36"		95.0	130.0	130.0	130.0	
42"		82.8	130.0	122.5	130.0	
48"		73.8	118.8	108.9	130.0	
53"		68.1	109.6	100.2	119.7	
30"	110-1/2"	104.8	130.0	130.0	130.0	
36"		88.5	130.0	130.0	130.0	
42"		77.1	123.9	116.8	130.0	
48"		68.7	110.5	103.7	124.0	
52"		64.3	103.4	96.9	115.8	
30"	114"	95.3	130.0	130.0	130.0	
36"		80.4	129.3	126.1	130.0	
42"		69.9	112.5	109.4	130.0	
48"		62.3	100.1	97.1	116.0	
50"		60.1	96.7	93.7	112.0	
30"	120"	81.5	130.0	130.0	130.0	
36"		68.6	110.4	113.5	130.0	
42"		59.6	95.9	98.3	117.5	
48"		53.0	85.2	87.1	104.1	

NOTE:
INTERPOLATION BETWEEN WIDTHS ALLOWED.

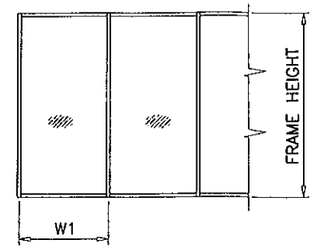

WIDTH (W) = W1
AT FRAME JAMB

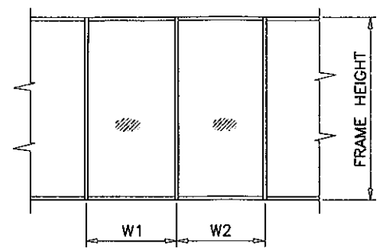

WIDTH (W) = $\frac{W1 + W2}{2}$
AT FRAME MULLION

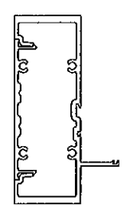

JAMB 'J1'

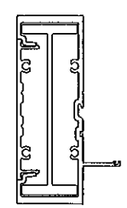

JAMB 'J2'

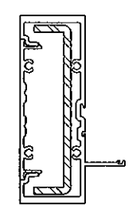

JAMB 'J3'

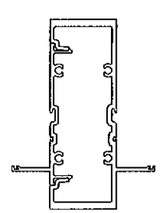

MULLION 'M1'

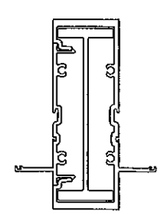

MULLION 'M2'

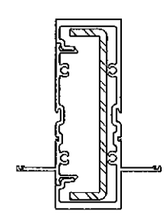

MULLION 'M3'

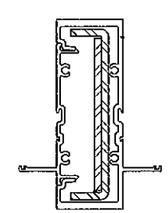

MULLION 'M4'

MULLIONS

Engr: JAVAD AHMAD
CIVIL
FLA. PE # 70592
C.A.N. 3538

PRODUCT REVISED
as complying with the Florida
Building Code
Acceptance No 12-0328.06
Expiration Date APRIL 3, 2013
By Mamed Perez
Miami Dade Product Control

MAR 07 2012

AL-FAROOQ CORPORATION
ENGINEERS & PRODUCT DEVELOPMENT
1235 S.W. 87 AVE
MIAMI, FLORIDA 33174
TEL. (305) 264-8100 FAX. (305) 262-6978
STORE\W11-39MG

SERIES MG5000 ALUM WINDOW WALL SYSTEM (L.M.I.)
MR. GLASS DOORS & WINDOWS INC.
7440 N.W. 66 STREET
MIAMI, FL. 33166
TEL. (305) 470-8284 FAX. (305) 470-8285

revisions:

no	date	by	description
A	03.05.12		NO CHANGE THIS SHEET

date: 07-15-11
scale: -
dr. by: HAMID
chk. by:

drawing no.
W11-39

sheet 3 of 12

MULLION LOAD CAPACITY - PSF
MULLIONS WITH INTERMEDIATE HORIZONTALS

NOMINAL DIMS.		JAMB 'J1' MULL 'M1'	JAMB 'J1' MULL 'M2'	JAMB 'J2' JAMB 'J3' MULL 'M3'	JAMB 'J3' MULL 'M4,	UNANCHORED JAMB OPTIONS MULL OPTIONS
WIDTH (W)	FRAME HEIGHT	EXT. (+) INT. (−)	EXT. (+) INT. (−)	EXT. (+) INT. (−)	EXT. (+) INT. (−)	
30"	78"	130.0	130.0	130.0	130.0	
36"		130.0	130.0	130.0	130.0	
42"		130.0	130.0	130.0	130.0	
48"		130.0	130.0	130.0	130.0	
54"		130.0	130.0	130.0	130.0	
60"		130.0	130.0	130.0	130.0	
30"	86-1/2"	130.0	130.0	130.0	130.0	
36"		130.0	130.0	130.0	130.0	
42"		130.0	130.0	130.0	130.0	
48"		130.0	130.0	130.0	130.0	
54"		118.1	130.0	130.0	130.0	
60"		106.3	130.0	127.2	130.0	
30"	90"	130.0	130.0	130.0	130.0	
36"		130.0	130.0	130.0	130.0	
42"		130.0	130.0	130.0	130.0	
48"		118.0	130.0	130.0	130.0	
54"		104.9	130.0	130.0	130.0	
60"		94.4	130.0	117.5	130.0	
30"	96"	130.0	130.0	130.0	130.0	
36"		129.6	130.0	130.0	130.0	
42"		111.1	130.0	130.0	130.0	
48"		97.2	130.0	129.0	130.0	
54"		86.4	130.0	114.7	130.0	
60"		77.8	125.1	103.2	123.4	
30"	98-1/2"	130.0	130.0	130.0	130.0	
36"		120.0	130.0	130.0	130.0	
42"		102.8	130.0	130.0	130.0	
48"		90.0	130.0	122.6	130.0	
54"		80.0	128.7	109.0	130.0	
58"		74.5	119.8	101.4	121.2	
30"	102"	129.7	130.0	130.0	130.0	
36"		108.1	130.0	130.0	130.0	
42"		92.6	130.0	130.0	130.0	
48"		81.0	130.0	114.3	130.0	
54"		72.0	115.9	101.6	121.4	
56"		69.5	111.7	98.0	117.1	
30"	108"	109.2	130.0	130.0	130.0	
36"		91.0	130.0	130.0	130.0	
42"		78.0	125.5	116.5	130.0	
48"		68.3	109.8	102.0	121.9	
53"		61.8	99.5	92.3	110.4	
30"	110-1/2"	102.0	130.0	130.0	130.0	
36"		85.0	130.0	129.9	130.0	
42"		72.8	117.2	111.3	130.0	
48"		63.7	102.5	97.4	116.4	
52"		58.8	94.6	89.9	107.4	
30"	114"	92.9	130.0	130.0	130.0	
36"		77.4	124.5	122.0	130.0	
42"		66.3	106.7	104.6	125.0	
48"		58.0	93.4	91.5	109.4	
50"		55.7	89.6	87.8	105.0	
30"	120"	79.6	128.1	130.0	130.0	
36"		66.4	106.7	110.1	130.0	
42"		56.9	91.5	94.4	112.8	
48"		49.8	80.1	82.6	98.7	

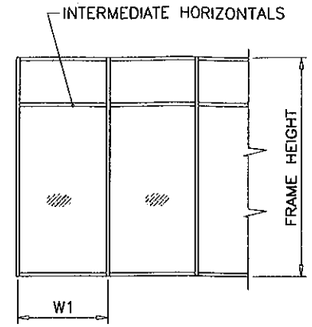

WIDTH (W) = W1
AT FRAME JAMB

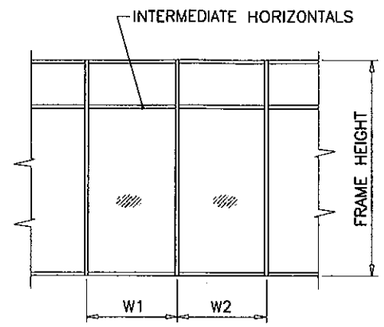

WIDTH (W) = $\frac{W1 + W2}{2}$
AT FRAME MULLION

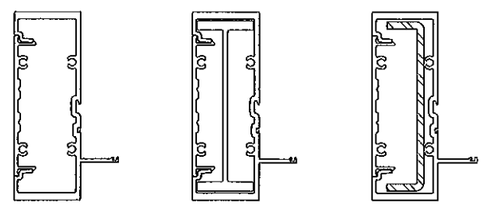

JAMB 'J1' JAMB 'J2' JAMB 'J3'

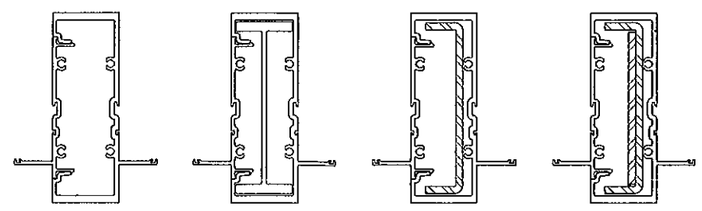

MULLION 'M1' MULLION 'M2' MULLION 'M3' MULLION 'M4'

NOTE:
INTERPOLATION BETWEEN WIDTHS ALLOWED.

MULLIONS

Engr: JAVAD AHMAD
CIVIL
FLA. PE # 70592
C.A.N. 3538

PRODUCT REVISED
as complying with the Florida
Building Code
Acceptance No 12-0328.06
Expiration Date APRIL 3, 2013
By Manuel Perez
Miami Dade Product Control

MAR 07 2012

AL-FAROOQ CORPORATION
ENGINEERS & PRODUCT DEVELOPMENT
1235 S.W. 87 AVE
MIAMI, FLORIDA 33174
TEL. (305) 264-8100 FAX. (305) 262-6978

STORE\W11-39MG

SERIES MG5000 ALUM WINDOW WALL SYSTEM (L.M.I.)

MR. GLASS DOORS & WINDOWS INC.
7440 N.W. 66 STREET
MIAMI, FL. 33166
TEL. (305) 470-8284 FAX. (305) 470-8285

revisions:

no	date	by	description
A	03.05.12		NO CHANGE THIS SHEET

date: 07-15-11
scale: -
dr. by: HAMID
chk. by:

drawing no.
W11-39

DOOR MULLION LOAD CAPACITY-PSF					
SIDELITE WIDTH INCHES	FRAME HEIGHT INCHES	JAMB 'JD1' MULL 'MD1'	JAMB 'JD1' MULL 'MD2'	JAMB 'JD2' JAMB 'JD3' MULL 'MD3'	JAMB 'JD3' MULL 'MD4'
		EXT. (+) INT. (-)	EXT. (+) INT. (-)	EXT. (+) INT. (-)	EXT. (+) INT. (-)
32	86-1/2	120.0	120.0	120.0	120.0
36		120.0	120.0	120.0	120.0
42		120.0	120.0	120.0	120.0
48		120.0	120.0	120.0	120.0
54		120.0	120.0	120.0	120.0
60		119.4	120.0	120.0	120.0
32	98-1/2	109.5	120.0	120.0	120.0
36		104.2	120.0	120.0	120.0
42		97.2	120.0	120.0	120.0
48		91.1	120.0	120.0	120.0
54		85.7	120.0	116.6	120.0
32	110-1/2	77.6	120.0	118.4	120.0
36		73.8	114.4	112.7	120.0
42		68.8	106.7	105.1	120.0
48		64.5	100.0	98.5	117.7

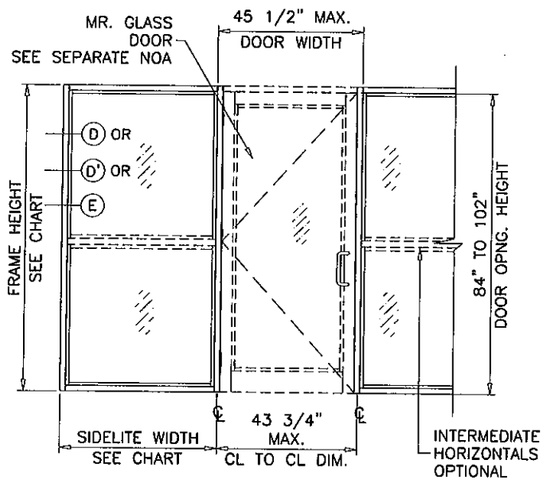

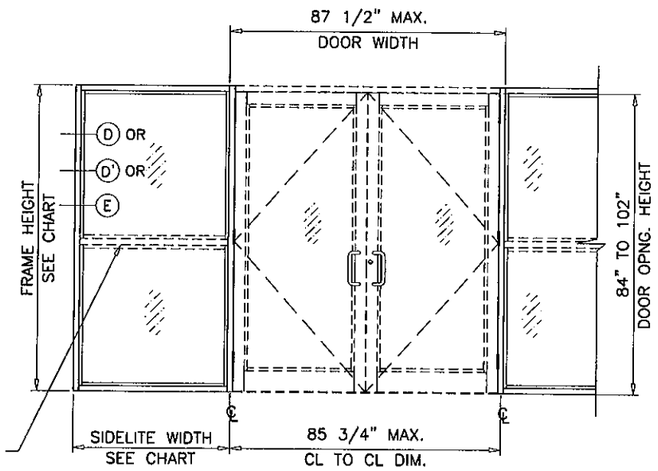

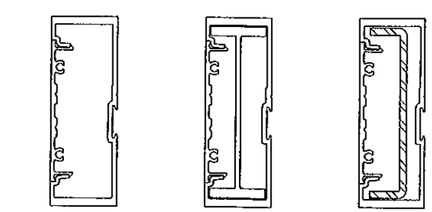

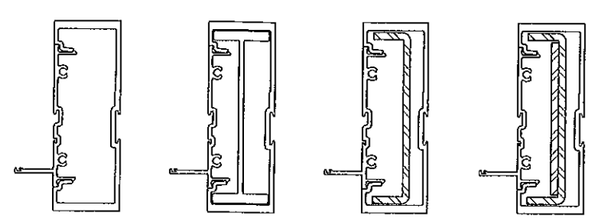

DOOR MULLION LOAD CAPACITY-PSF					
SIDELITE WIDTH INCHES	FRAME HEIGHT INCHES	JAMB 'JD1' MULL 'MD1'	JAMB 'JD1' MULL 'MD2'	JAMB 'JD2' JAMB 'JD3' MULL 'MD3'	JAMB 'JD3' MULL 'MD4'
		EXT. (+) INT. (-)	EXT. (+) INT. (-)	EXT. (+) INT. (-)	EXT. (+) INT. (-)
32	98-1/2	90.0	90.0	90.0	90.0
36		90.0	90.0	90.0	90.0
42		90.0	90.0	90.0	90.0
48		90.0	90.0	90.0	90.0
54		85.7	90.0	90.0	90.0
32	110-1/2	77.6	90.0	90.0	90.0
36		73.8	90.0	90.0	90.0
42		68.8	90.0	90.0	90.0
48		64.5	90.0	90.0	90.0
32	114	70.6	90.0	90.0	90.0
36		67.2	90.0	90.0	90.0
42		62.7	90.0	90.0	90.0
48		58.7	90.0	90.0	90.0
32	120	60.6	90.0	90.0	90.0
36		57.6	89.4	90.0	90.0
42		53.8	83.3	89.1	90.0
48		50.4	78.1	83.5	90.0

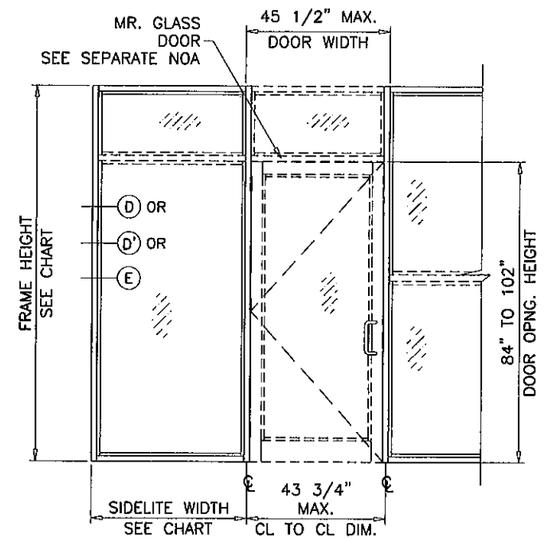

DOOR-WINDOWALL
TRANSITION MULLION

Engr: JAVAD AHMAD
CIVIL
FLA. PE # 70592
C.A.N. 3538

PRODUCT REVISED
as complying with the Florida
Building Code
Acceptance No 12-0328.06
Expiration Date Dec. 3, 2013
By
Miami Dade Product Control

MAR 07 2012

AL-FAROOQ CORPORATION
ENGINEERS & PRODUCT DEVELOPMENT
1235 S.W. 87 AVE
MIAMI, FLORIDA 33174
TEL. (305) 264-8100 FAX. (305) 262-6978
STORE\W11-39MG

SERIES MG5000 ALUM WINDOW WALL SYSTEM (L.M.I.)

MR. GLASS DOORS & WINDOWS INC.
7440 N.W. 66 STREET
MIAMI, FL. 33166
TEL. (305) 470-8284 FAX. (305) 470-8285

revisions:

no	date	by	description
A	03.05.12		NO CHANGE THIS SHEET

date: 07-15-11
scale: -
dr. by: HAMID
chk. by:

drawing no.
W11-39

ANCHOR LOAD CAPACITY – PSF
EXT.(+) & INT.(–)

NOMINAL DIMS.		ANCHORS TYPE 'A'			ANCHORS TYPE 'B' & 'D'			ANCHORS TYPE 'C'		
WIDTH (W)	FRAME HEIGHT	A2	A3	A4	B2/D2	B3/D3	B4/D4	C2	C3	C4
30"	72"	130.0	130.0	130.0	130.0	130.0	130.0	130.0	130.0	130.0
36"		108.4	130.0	130.0	130.0	130.0	130.0	130.0	130.0	130.0
42"		93.0	130.0	130.0	122.3	130.0	130.0	130.0	130.0	130.0
48"		81.3	122.0	130.0	107.0	130.0	130.0	123.3	130.0	130.0
54"		72.3	108.4	130.0	95.1	130.0	130.0	109.6	130.0	130.0
60"		65.1	97.6	130.0	85.6	128.4	130.0	98.7	130.0	130.0
30"	78"	120.1	130.0	130.0	130.0	130.0	130.0	130.0	130.0	130.0
36"		100.1	130.0	130.0	130.0	130.0	130.0	130.0	130.0	130.0
42"		85.8	128.7	130.0	112.9	130.0	130.0	130.0	130.0	130.0
48"		75.1	112.6	130.0	98.8	130.0	130.0	113.8	130.0	130.0
54"		66.7	100.1	130.0	87.8	130.0	130.0	101.2	130.0	130.0
60"		60.1	90.1	120.1	79.0	118.5	130.0	91.1	130.0	130.0
30"	86–1/2"	108.3	130.0	130.0	130.0	130.0	130.0	130.0	130.0	130.0
36"		90.3	130.0	130.0	118.8	130.0	130.0	130.0	130.0	130.0
42"		77.4	116.1	130.0	101.8	130.0	130.0	117.3	130.0	130.0
48"		67.7	101.5	130.0	89.1	130.0	130.0	102.7	130.0	130.0
54"		60.2	90.3	120.4	79.2	118.8	130.0	91.3	130.0	130.0
60"		54.2	81.2	108.3	71.3	106.9	130.0	82.1	123.2	130.0
30"	90"	104.1	130.0	130.0	130.0	130.0	130.0	130.0	130.0	130.0
36"		86.8	130.0	130.0	114.1	130.0	130.0	130.0	130.0	130.0
42"		74.4	111.5	130.0	97.8	130.0	130.0	112.8	130.0	130.0
48"		65.1	97.6	130.0	85.6	128.4	130.0	98.7	130.0	130.0
54"		57.8	86.8	115.7	76.1	114.1	130.0	87.7	130.0	130.0
60"		52.1	78.1	104.1	68.5	102.7	130.0	78.9	118.4	130.0
30"	96"	97.6	130.0	130.0	128.4	130.0	130.0	130.0	130.0	130.0
36"		81.3	122.0	130.0	107.0	130.0	130.0	123.3	130.0	130.0
42"		69.7	104.6	130.0	91.7	130.0	130.0	105.7	130.0	130.0
48"		61.0	91.5	122.0	80.3	120.4	130.0	92.5	130.0	130.0
54"		54.2	81.3	108.4	71.3	107.0	130.0	82.2	123.3	130.0
60"		48.8	73.2	97.6	64.2	96.3	128.4	74.0	111.0	130.0
30"	98–1/2"	95.1	130.0	130.0	125.1	130.0	130.0	130.0	130.0	130.0
36"		79.3	118.9	130.0	104.3	130.0	130.0	120.2	130.0	130.0
42"		67.9	101.9	130.0	89.4	130.0	130.0	103.0	130.0	130.0
48"		59.5	89.2	118.9	78.2	117.3	130.0	90.2	130.0	130.0
54"		52.8	79.3	105.7	69.5	104.3	130.0	80.1	120.2	130.0
30"	102"	91.9	130.0	130.0	120.8	130.0	130.0	130.0	130.0	130.0
36"		76.5	114.8	130.0	100.7	130.0	130.0	116.1	130.0	130.0
42"		65.6	98.4	130.0	86.3	129.5	130.0	99.5	130.0	130.0
48"		57.4	86.1	114.8	75.5	113.3	130.0	87.1	130.0	130.0
54"		51.0	76.5	102.1	67.1	100.7	130.0	77.4	116.1	130.0
30"	108"	86.8	130.0	130.0	114.1	130.0	130.0	130.0	130.0	130.0
36"		72.3	108.4	130.0	95.1	130.0	130.0	109.6	130.0	130.0
42"		62.0	93.0	123.9	81.5	122.3	130.0	94.0	130.0	130.0
48"		54.2	81.3	108.4	71.3	107.0	130.0	82.2	123.3	130.0
30"	110–1/2"	84.8	127.2	130.0	111.6	130.0	130.0	128.6	130.0	130.0
36"		70.7	106.0	130.0	93.0	130.0	130.0	107.1	130.0	130.0
42"		60.6	90.8	121.1	79.7	119.5	130.0	91.8	130.0	130.0
48"		53.0	79.5	106.0	69.7	104.6	130.0	80.4	120.5	130.0
30"	114"	82.2	123.3	130.0	108.1	130.0	130.0	124.6	130.0	130.0
36"		68.5	102.7	130.0	90.1	130.0	130.0	103.9	130.0	130.0
42"		58.7	88.1	117.4	77.2	115.8	130.0	89.0	130.0	130.0
48"		51.4	77.1	102.7	67.6	101.4	130.0	77.9	116.8	130.0
30"	120"	78.1	117.1	130.0	102.7	130.0	130.0	118.4	130.0	130.0
36"		65.1	97.6	130.0	85.6	128.4	130.0	98.7	130.0	130.0
42"		55.8	83.7	111.5	73.4	110.1	130.0	84.6	126.9	130.0
48"		48.8	73.2	97.6	64.2	96.3	128.4	74.0	111.0	130.0

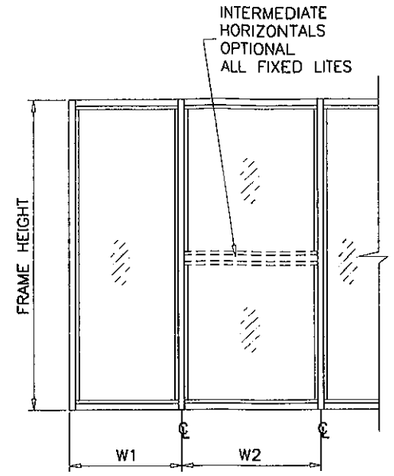

$$\text{WIDTH (W)} = \frac{W1 + W2}{2}$$

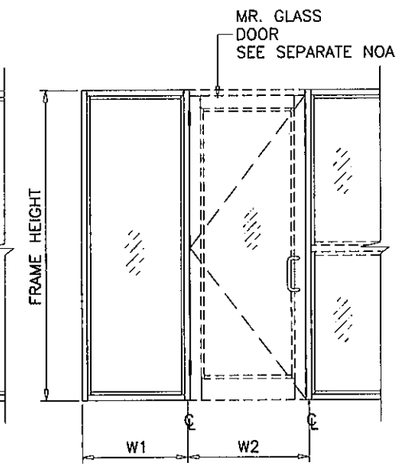

$$\text{WIDTH (W)} = \frac{W1 + W2}{2}$$

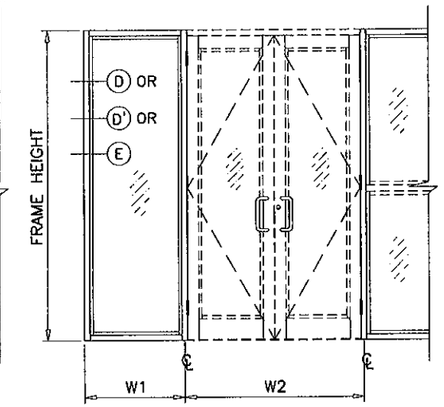

$$\text{WIDTH (W)} = \frac{W1}{2} + \frac{W2}{4}$$

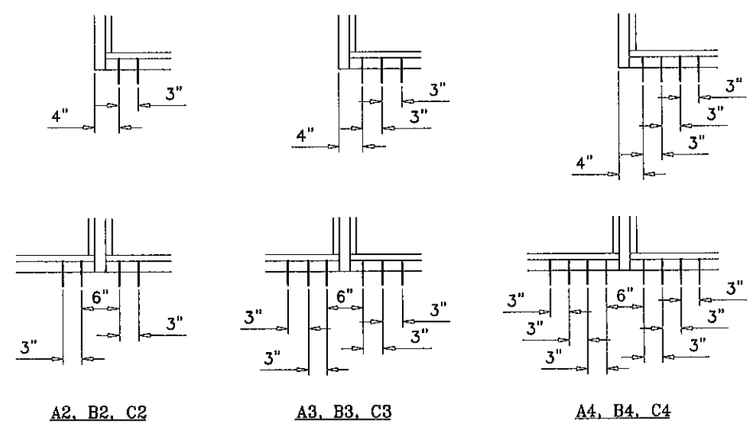

A2, B2, C2 A3, B3, C3 A4, B4, C4

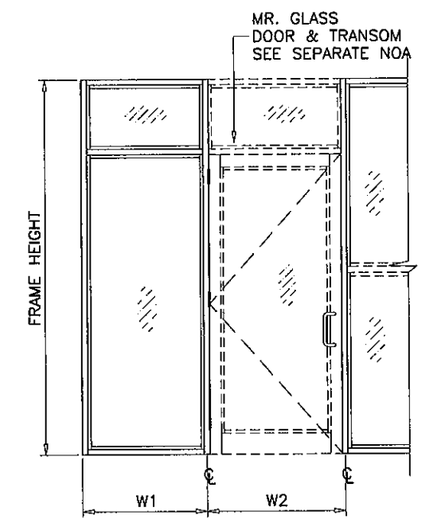

$$\text{WIDTH (W)} = \frac{W1 + W2}{2}$$

ANCHORS TYPES: SEE SHEET 8 FOR DESCRIPTION

A2 = (2) ANCHORS TYPE 'A' AT EACH SIDE OF JAMB AND MULLION
B2 = (2) ANCHORS TYPE 'B' AT EACH SIDE OF JAMB AND MULLION
C2 = (2) ANCHORS TYPE 'C' AT EACH SIDE OF JAMB AND MULLION
D2 = (2) ANCHORS TYPE 'D' AT EACH SIDE OF JAMB AND MULLION

A3 = (3) ANCHORS TYPE 'A' AT EACH SIDE OF JAMB AND MULLION
B3 = (3) ANCHORS TYPE 'B' AT EACH SIDE OF JAMB AND MULLION
C3 = (3) ANCHORS TYPE 'C' AT EACH SIDE OF JAMB AND MULLION
D3 = (3) ANCHORS TYPE 'D' AT EACH SIDE OF JAMB AND MULLION

A4 = (4) ANCHORS TYPE 'A' AT EACH SIDE OF JAMB AND MULLION
B4 = (4) ANCHORS TYPE 'B' AT EACH SIDE OF JAMB AND MULLION
C4 = (4) ANCHORS TYPE 'C' AT EACH SIDE OF JAMB AND MULLION
D4 = (4) ANCHORS TYPE 'D' AT EACH SIDE OF JAMB AND MULLION

ALL OTHER ANCHORS TO BE SPACED AS PER ELEVATION.

NOTE:
INTERPOLATION BETWEEN WIDTHS OR HEIGHTS ALLOWED.

ANCHORS

Engr: JAVAD AHMAD
CIVIL
FLA. PE # 70592
C.A.N. 3538

PRODUCT REVISED
as complying with the Florida
Building Code
Acceptance No 12-0328.06
Expiration Date APRIL 3, 2013
By Manuel Perez
Miami-Dade Product Control

MAR 07 2012

AL-FAROOQ CORPORATION
ENGINEERS & PROJECT DEVELOPMENT
1235 S.W. 87 AVE
MIAMI, FLORIDA 33174
TEL. (305) 264-8100 FAX. (305) 262-6978

STORE\W11-39MG

SERIES MC5000 ALUM WINDOW WALL SYSTEM (L.M.I.)

MR. GLASS DOORS & WINDOWS INC.
7440 N.W. 66 STREET
MIAMI, FL. 33166
TEL. (305) 470-8284 FAX. (305) 470-8285

revisions:

no	date	by	description
A	03.05.12		NO CHANGE THIS SHEET

date: 07-15-11
scale: –
dr. by: HAMID
chk. by:

drawing no. W11–39

DOOR MULLION LOAD CAPACITY–PSF					
SIDELITE WIDTH INCHES	FRAME HEIGHT INCHES	JAMB 'JD1' MULL 'MD1'	JAMB 'JD1' MULL 'MD2'	JAMB 'JD2' JAMB 'JD3' MULL 'MD3'	JAMB 'JD3' MULL 'MD4'
		EXT. (+) INT. (–)	EXT. (+) INT. (–)	EXT. (+) INT. (–)	EXT. (+) INT. (–)
30	96	90.0	90.0	90.0	90.0
36		90.0	90.0	90.0	90.0
42		90.0	90.0	90.0	90.0
48		90.0	90.0	90.0	90.0
54		85.4	90.0	90.0	90.0
60		81.0	90.0	90.0	90.0
30	102	86.3	90.0	90.0	90.0
36		80.9	90.0	90.0	90.0
42		76.2	90.0	90.0	90.0
48		71.9	90.0	90.0	90.0
54		68.2	90.0	90.0	90.0
30	108	69.6	90.0	90.0	90.0
36		65.4	90.0	90.0	90.0
42		61.7	90.0	90.0	90.0
48		58.5	90.0	88.3	90.0
30	114	57.2	88.7	90.0	90.0
36		53.9	83.6	85.3	90.0
42		51.0	79.0	80.7	90.0
48		48.3	74.9	76.6	90.0
30	120	47.8	74.1	78.7	90.0
36		45.1	69.9	74.4	88.9
42		42.7	66.2	70.5	84.2
48		40.5	62.8	67.0	80.1

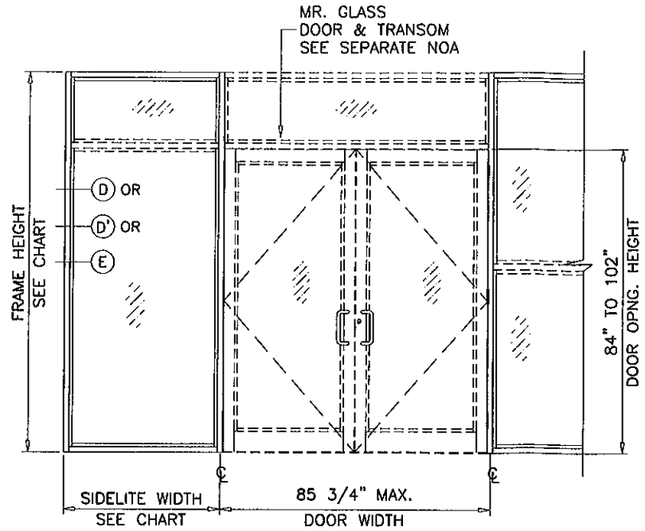

ANCHOR LOAD CAPACITY – PSF EXT.(+) & INT.(–)					
NOMINAL DIMS.		ANCHORS TYPE 'A'		ANCHORS TYPE 'B' & 'D'	ANCHORS TYPE 'C'
WIDTH (W)	FRAME HEIGHT	A3	A4	B3/D3	C3
30	96	79.6	90.0	90.0	90.0
36		75.5	90.0	90.0	90.0
42		71.8	90.0	90.0	90.0
48		68.4	90.0	90.0	90.0
54		65.4	86.0	86.0	90.0
60		62.6	82.3	82.3	90.0
30	102	76.4	90.0	90.0	90.0
36		72.4	90.0	90.0	90.0
42		68.8	90.0	90.0	90.0
48		65.5	86.2	86.2	90.0
54		62.5	82.3	82.3	90.0
30	108	73.5	90.0	90.0	90.0
36		69.6	90.0	90.0	90.0
42		66.0	86.9	86.9	90.0
48		62.9	82.7	82.7	90.0
30	114	70.8	90.0	90.0	90.0
36		67.0	88.1	88.1	90.0
42		63.5	83.6	83.6	90.0
48		60.4	79.5	79.5	90.0
30	120	68.3	89.9	89.9	90.0
36		64.5	84.9	84.9	90.0
42		61.2	80.5	80.5	90.0
48		58.1	76.5	76.5	88.1

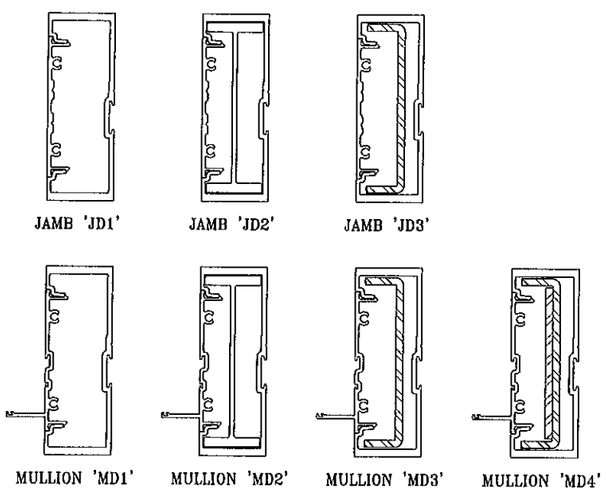

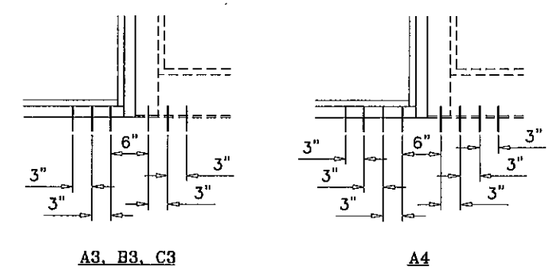

A3, B3, C3 A4

ANCHORS TYPES: SEE SHEET 8 FOR DESCRIPTION

A3 = (3) ANCHORS TYPE 'A' AT EACH SIDE OF DOOR MULLION
B3 = (3) ANCHORS TYPE 'B' AT EACH SIDE OF DOOR MULLION
C3 = (3) ANCHORS TYPE 'C' AT EACH SIDE OF DOOR MULLION
D3 = (3) ANCHORS TYPE 'D' AT EACH SIDE OF DOOR MULLION

A4 = (4) ANCHORS TYPE 'A' AT EACH SIDE OF DOOR MULLION

ALL OTHER ANCHORS TO BE SPACED AS PER ELEVATION.

DOOR–WINDOWALL
TRANSITION MULLION

TRANSITION MULLION ANCHORS

Engr: JAVAD AHMAD
CIVIL
FLA. PE # 70592
C.A.N. 3538

PRODUCT REVISED
as complying with the Florida
Building Code
Acceptance No 12-0328.06
Expiration Date April 3, 2013
By Manuel Perez
Miami Dade Product Control

MAR 07 2012

AL-FAROOQ CORPORATION
ENGINEERS & PRODUCT DEVELOPMENT
1235 S.W. 87 AVE
MIAMI, FLORIDA 33174
TEL. (305) 264-8100 FAX. (305) 262-6978

STORE\W11–39MG

SERIES MG5000 ALUM WINDOW WALL SYSTEM (L.M.I.)

MR. GLASS DOORS & WINDOWS INC.
7440 N.W. 66 STREET
MIAMI, FL. 33166
TEL. (305) 470-8284 FAX. (305) 470-8285

revisions:

no	date	by	description
A	03.05.12		NO CHANGE THIS SHEET

date: 07-15-11
scale: –
dr. by: HAMID
chk. by:

drawing no.
W11–39

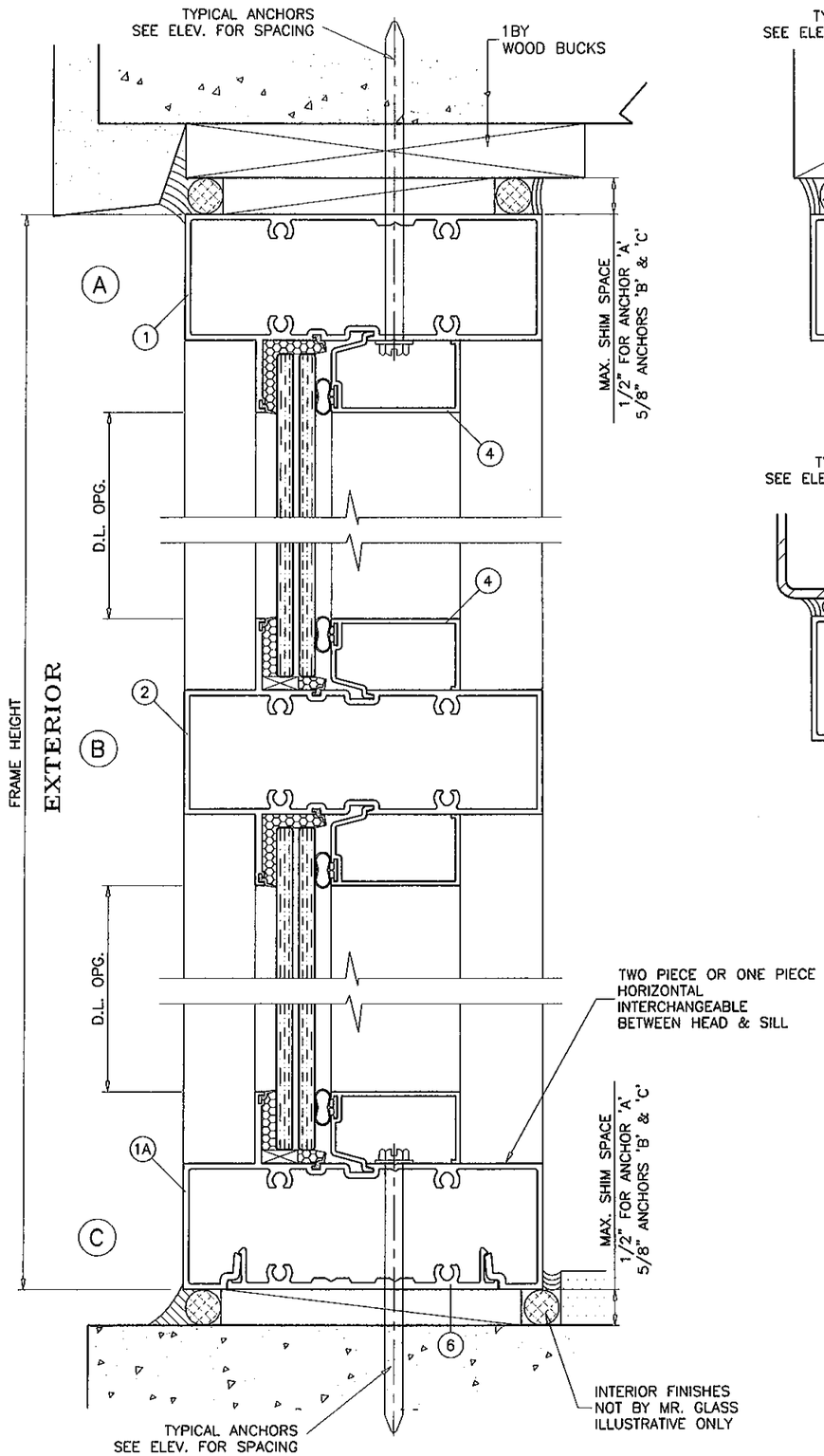

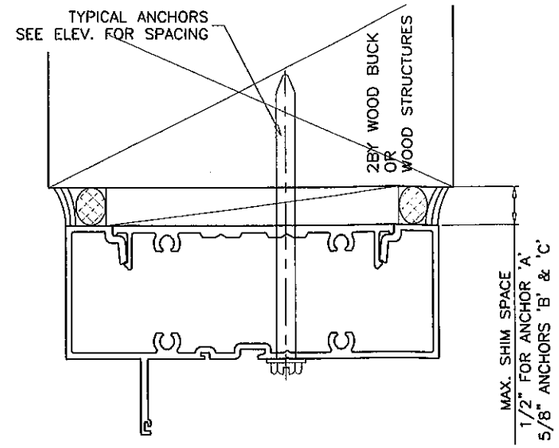

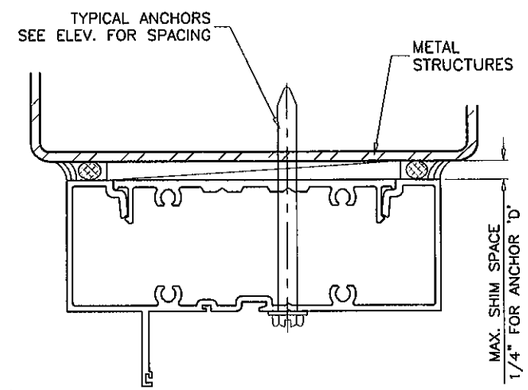

TYPICAL ANCHORS: SEE ELEV. FOR SPACING

TYPE 'A'

1/4" DIA ULTRACON BY 'ELCO'

INTO 2BY WOOD BUCKS OR WOOD STRUCTURES
WITH 1-3/8" MIN. PENETRATION INTO WOOD

THRU 1BY WOOD BUCKS INTO CONCRETE
WITH 1-1/4" MIN. EMBED INTO CONCRETE

DIRECTLY INTO CONCRETE
WITH 1-1/4" MIN. EMBED INTO CONC.

ANCHOR EDGE DISTANCES

INTO CONCRETE AND MASONRY = 2-1/2" MIN.
INTO WOOD STRUCTURE = 1" MIN.

TYPE 'B'

1/4" DIA HILTI KWIK CON II BY 'HILTI'

INTO 2BY WOOD BUCKS OR WOOD STRUCTURES
WITH 1-1/2" MIN. PENETRATION INTO WOOD

THRU 1BY WOOD BUCKS INTO CONCRETE
WITH 1-1/4" MIN. EMBED INTO CONCRETE

DIRECTLY INTO CONCRETE
WITH 1-1/4" MIN. EMBED INTO CONC.

ANCHOR EDGE DISTANCES

INTO CONCRETE AND MASONRY = 3" MIN.
INTO WOOD STRUCTURE = 1" MIN.

TYPE 'C'

5/16" DIA ULTRACON BY 'ELCO'

INTO 2BY WOOD BUCKS OR WOOD STRUCTURES
WITH 1-1/2" MIN. PENETRATION INTO WOOD

THRU 1BY WOOD BUCKS INTO CONCRETE
WITH 1-1/4" MIN. EMBED INTO CONCRETE

DIRECTLY INTO CONCRETE
WITH 1-1/4" MIN. EMBED INTO CONC.

ANCHOR EDGE DISTANCES

INTO CONCRETE AND MASONRY = 3" MIN.
INTO WOOD STRUCTURE = 1" MIN.

TYPE 'D'

#14 SMS OR SELF DRILLING SCREWS ST/ST

INTO METAL STRUCTURES

STEEL : 12 GA. MIN. (Fy = 36 KSI MIN.)
ALUMINUM : 1/8" THK. MIN. (6063-T5 MIN.)
(STEEL IN CONTACT WITH ALUMINUM TO BE PLATED OR PAINTED)

ANCHOR EDGE DISTANCES

INTO METAL STRUCTURE = 1/2" MIN.

SEALANTS:

ALL FRAME CORNERS, JOINTS, MULLION SEAMS AND PERIMETER OF GLAZING BEAD TO FRAME SEALED WITH SILICONE SEALANT.

WOOD BUCKS AND METAL STRUCTURES NOT BY MR. GLASS MUST SUPPORT LOADS IMPOSED BY GLAZING SYSTEM AND TRANSFER THEM TO THE BUILDING STRUCTURE.

Engr: JAVAD AHMAD
CIVIL
FLA. PE #. 70592
C.A.N. 3538

PRODUCT REVISED
as complying with the Florida Building Code
Acceptance No 12-0328.06
Expiration Date APRIL 3, 2013
By Manuel Perez
Miami Dade Product Control

MAR 07 2012

AL-FAROOQ CORPORATION
ENGINEERS & PRODUCT DEVELOPMENT
1235 S.W. 87 AVE
MIAMI, FLORIDA 33174
TEL. (305) 264-8100 FAX. (305) 262-6978

STORE\W11-39MG

SERIES MG5000 ALUM WINDOW WALL SYSTEM (L.M.I.)

MR. GLASS DOORS & WINDOWS INC.
7440 N.W. 66 STREET
MIAMI, FL. 33166
TEL. (305) 470-8284 FAX. (305) 470-8285

revisions:			
no	date	by	description
A	03.05.12		NO CHANGE THIS SHEET

date: 07-15-11
scale: 1/2" = 1"
dr. by: HAMID
chk. by:

drawing no. W11-39

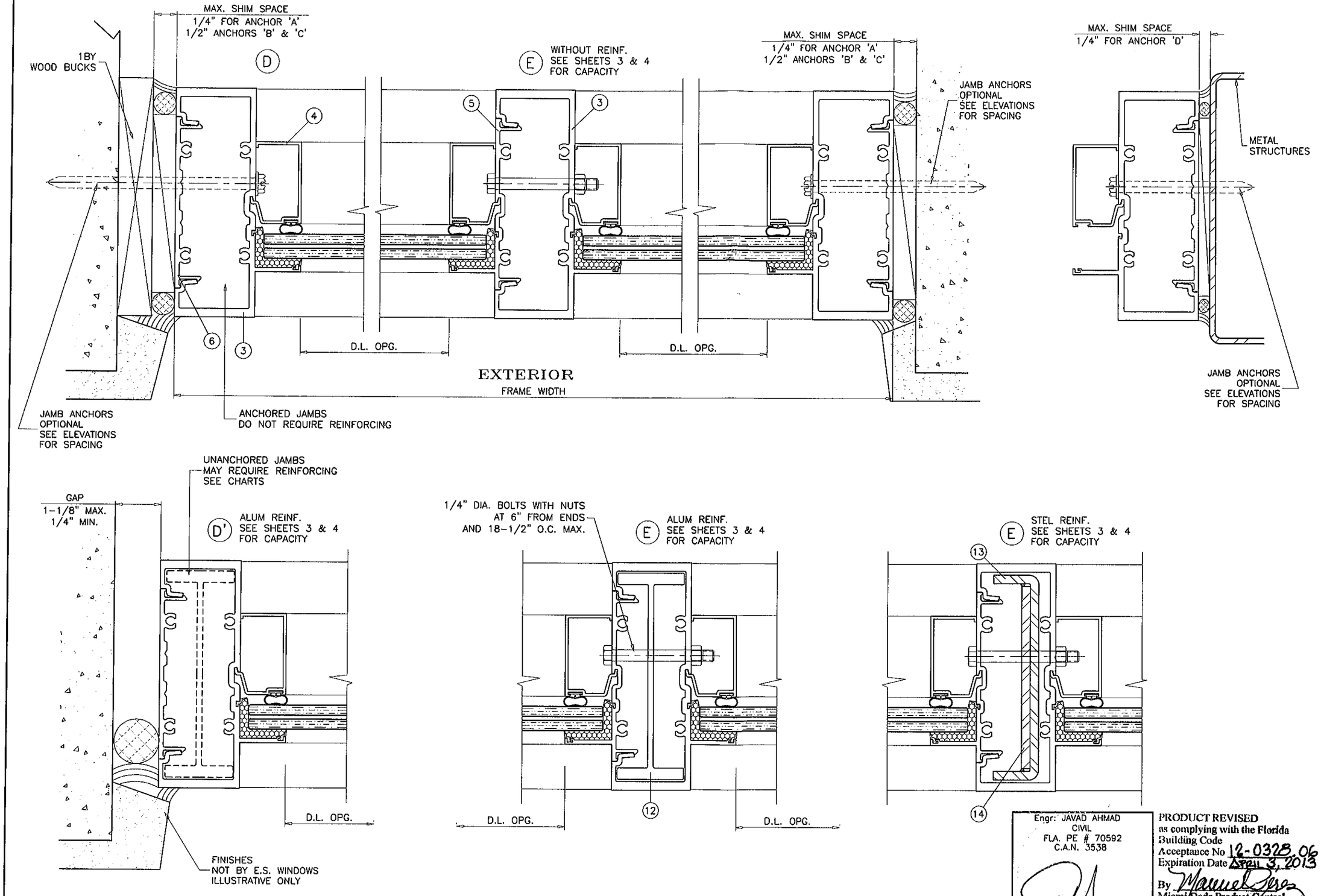

Engr: JAVAD AHMAD
CIVIL
FLA. PE # 70592
C.A.N. 3538

PRODUCT REVISED
as complying with the Florida
Building Code
Acceptance No 12-0328.06
Expiration Date April 3, 2013
By Manuel Perez
Miami/Dade Product Control
MAR 07 2012

AL-FAROOQ CORPORATION
ENGINEERS & PRODUCT DEVELOPMENT
1235 S.W. 87 AVE
MIAMI, FLORIDA 33174
TEL. (305) 264-8100 FAX. (305) 262-6978

STORE\W11-39MG

SERIES M65000 ALUM WINDOW WALL SYSTEM (L.M.I.)

MR. GLASS DOORS & WINDOWS INC.
7440 N.W. 66 STREET
MIAMI, FL. 33166
TEL. (305) 470-8284 FAX. (305) 470-8285

revisions:

no	date	by	description
A	03.05.12		UPDATED TO 2010 FBC

date: 07-15-11
scale: 1/2" = 1"
dr. by: HAMID
chk. by:

drawing no.
W11-39

sheet 9 of 12

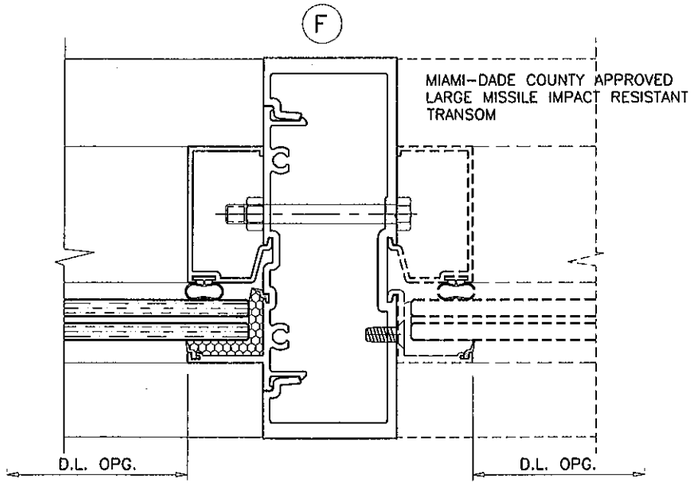

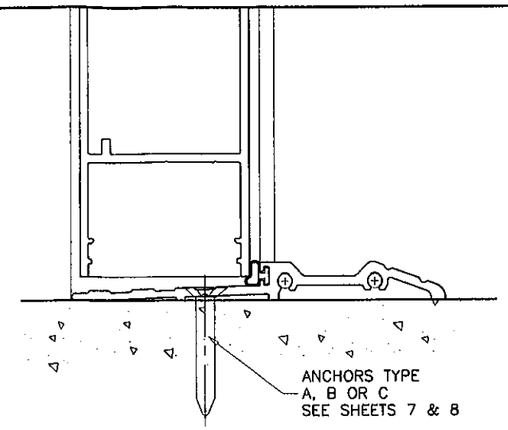

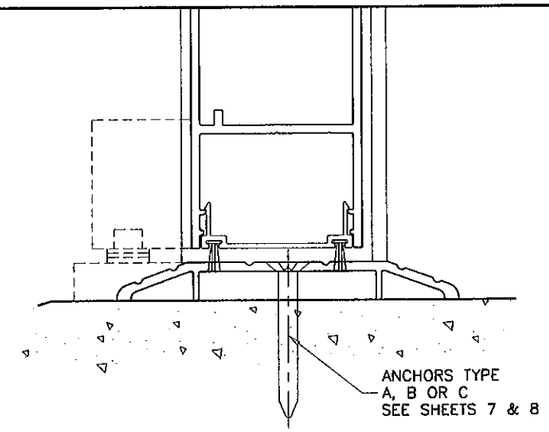

SEE SEPARATE NOA FOR DESIGN LOAD CAPACITY OF DOORS AND DOOR ANCHORS.

LOWER VALUES FROM DOORS NOA OR STOREFRONT SYSTEM CAPACITY CHARTS WILL APPLY TO ENTIRE SYSTEM.

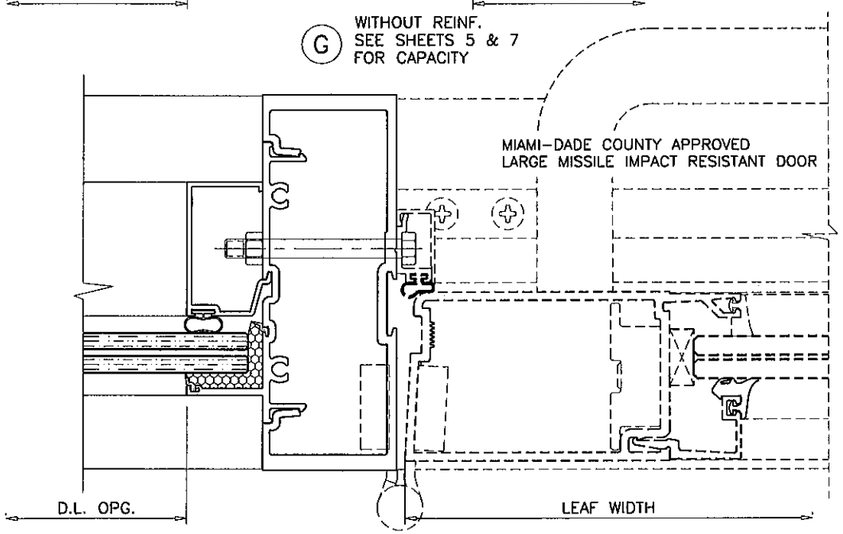

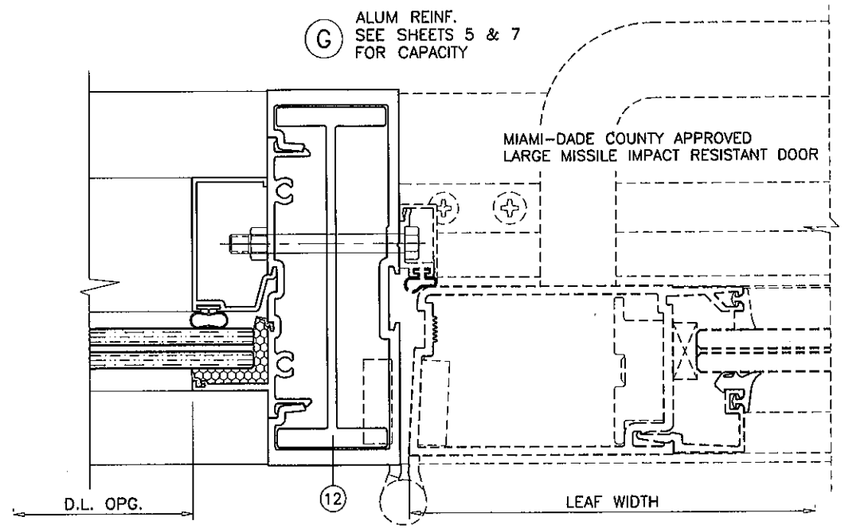

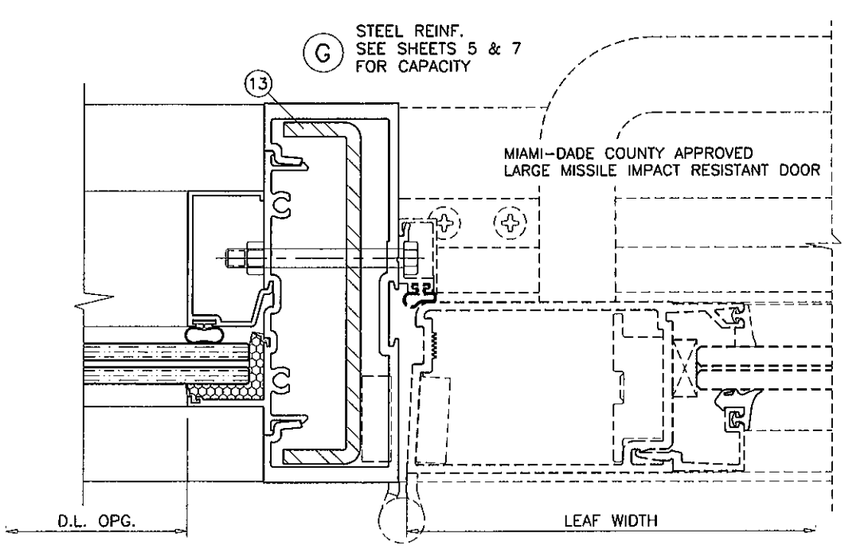

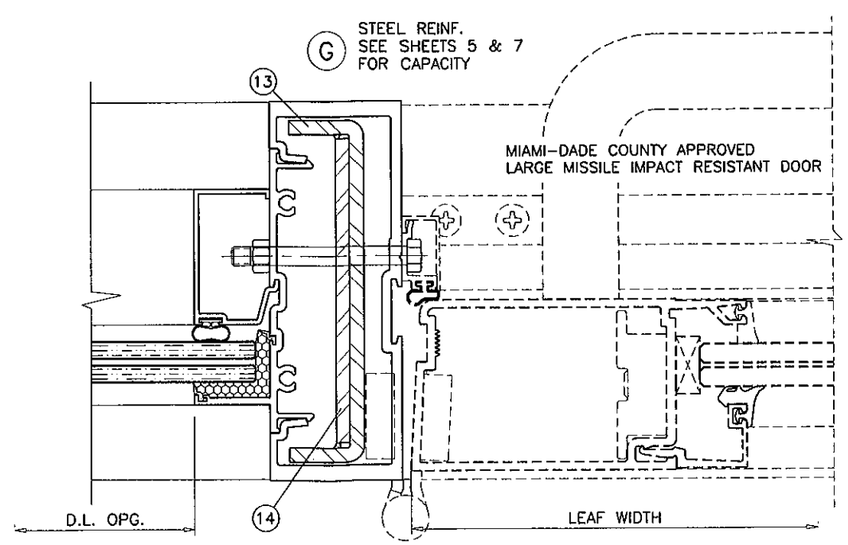

PRODUCT REVISED
as complying with the Florida
Building Code
Acceptance No 12-0328.06
Expiration Date April 3, 2013
By Manuel Perez
Miami Dade Product Control

Engr: JAVAD AHMAD
CIVIL
FLA. PE # 70592
C.A.N. 3538

MAR 07 2012

AL-FAROOQ CORPORATION
ENGINEERS & PRODUCT DEVELOPMENT
1235 S.W. 87 AVE
MIAMI, FLORIDA 33174
TEL. (305) 264-8100 FAX. (305) 262-6978
STORE\W11-39MG

SERIES MG5000 ALUM WINDOW WALL SYSTEM (L.M.I.)

MR. GLASS DOORS & WINDOWS INC.
7440 N.W. 66 STREET
MIAMI, FL. 33166
TEL. (305) 470-8284 FAX. (305) 470-8285

revisions:

no	date	by	description
A	03.05.12		NO CHANGE THIS SHEET

date: 07-15-11
scale: 1/2" = 1"
dr. by: HAMID
chk. by:

drawing no.
W11-39

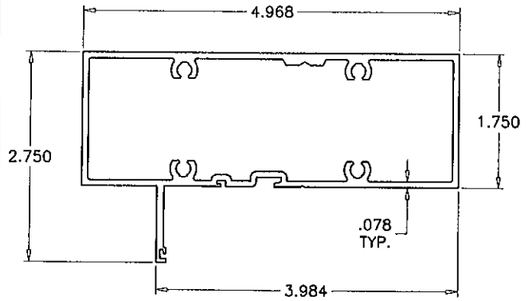

(1) HOLLOW FRAME HEAD/SILL

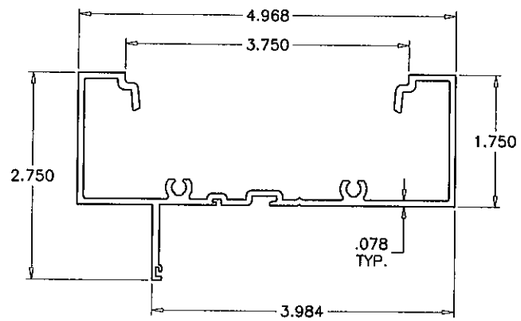

(1A) OPEN BACK FRAME HEAD/SILL

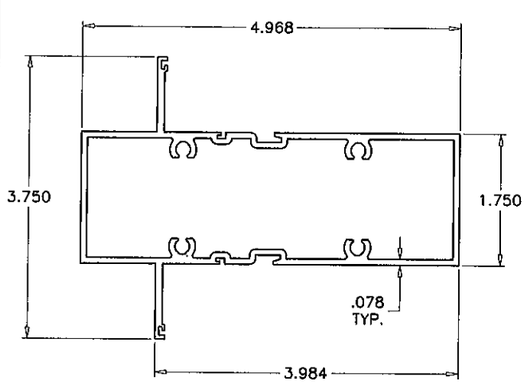

(2) INTERMEDIATE HORIZONTAL

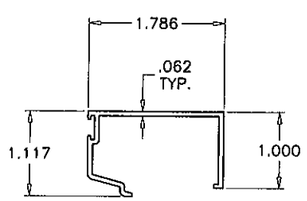

(4) GLASS STOP

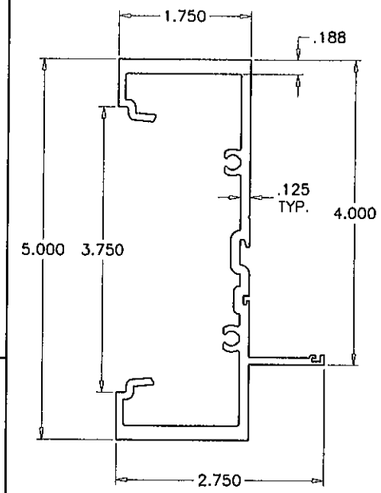

(3) FRAME JAMB/MULLION

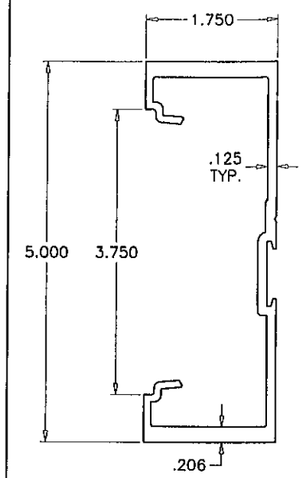

(3A) DOOR MULLION

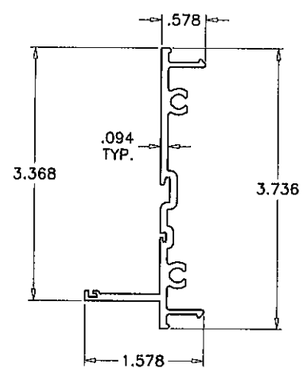

(5) MULLION SNAP-IN MATE

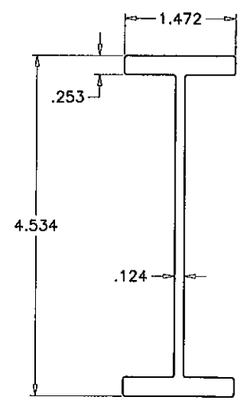

(12) STIFFENER

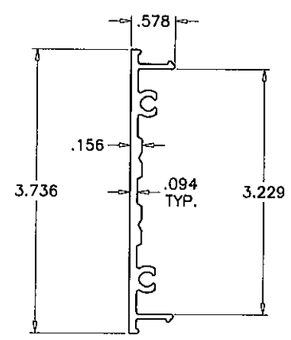

(6) SHEAR CLIP

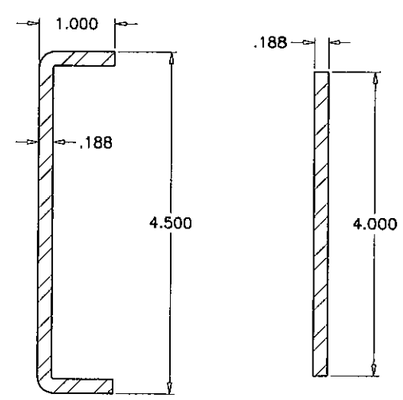

(13) STEEL REINFORCING
36 KSI MIN.

(14)

ITEM NO.	PART NUMBER	QUANTITY	DESCRIPTION	MATERIAL	MANF./SUPPLIER/REMARKS
1	ES8005	AS REQD.	HOLLOW FRAME HEAD/SILL	6005-T5	–
1A	ES8007	AS REQD.	OPEN BACK FRAME HEAD/SILL	6063-T6	–
2	ES8004	AS REQD.	INTERMEDIATE HORIZONTAL	6063-T6	–
3	ES8001	AS REQD.	FRAME JAMB/MULLION	6005-T5	–
3A	–	AS REQD.	DOOR MULLION	6005-T5	–
4	ES8006	AS REQD.	GLASS STOP	6063-T5	–
5	ES8002	AS REQD.	MULLION SNAP-IN MATE	6005-T5	–
6	ES8003	AS REQD.	SHEAR CLIP	6005-T5	–
7	–	AS REQD.	INTERIOR BULB GASKET	VINYL	–
8	ES8009	AS REQD.	SPACER/SILICONE STOP	VINYL	–
8A	–	AS REQD.	BUTTON BUMPER	SILICONE	–
9	–	–	–	–	–
10	–	AS REQD.	SETTING BLOCK AT 1/4" POINTS	NEOPRENE	3/16" X 1/2" X 2" LONG
11	#12 X 1-1/2"	4/ CORNER	ASSEMBLY SCREWS PHSMS	STEEL	–
12	–	AS REQD.	MULLION STIFFENER	6005-T5	–
13	–	AS REQD.	MULLION REINFORCING CHANNEL	STEEL	–
14	–	AS REQD.	MULLION REINFORCING BAR	STEEL	–

Engr: JAVAD AHMAD
CIVIL
FLA. PE # 70592
C.A.N. 3538

PRODUCT REVISED
as complying with the Florida
Building Code
Acceptance No 12-0328.06
Expiration Date APRIL 3, 2013
By Manuel Perez
Miami/Dade Product Control

MAR 07 2012

AL-FAROOQ CORPORATION
ENGINEERS & PRODUCT DEVELOPMENT
1235 S.W. 87 AVE
MIAMI, FLORIDA 33174
TEL. (305) 264-8100 FAX. (305) 262-6978

STORE\W11-39MG

SERIES MG5000 ALUM WINDOW WALL SYSTEM (L.M.I.)

MR. GLASS DOORS & WINDOWS INC.
7440 N.W. 66 STREET
MIAMI, FL. 33166
TEL. (305) 470-8284 FAX. (305) 470-8285

revisions:

no	date	by	description
A	03.05.12		UPDATED TO 2010 FBC

date: 07-15-11
scale: 1/2" = 1"
dr. by: HAMID
chk. by:

drawing no.
W11-39

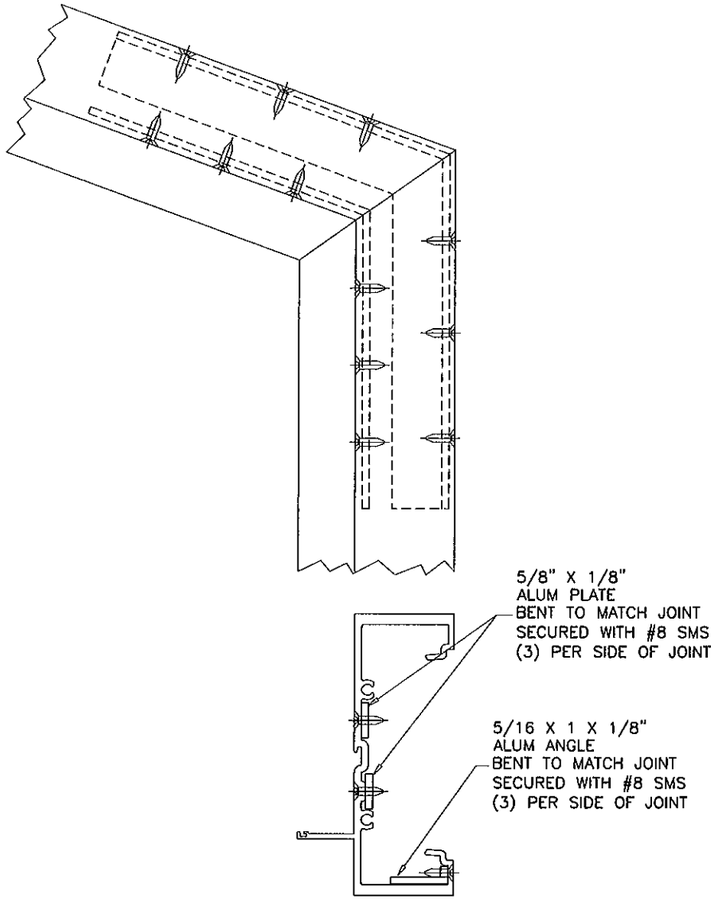

CIRCULAR OR ANGLED CORNERS

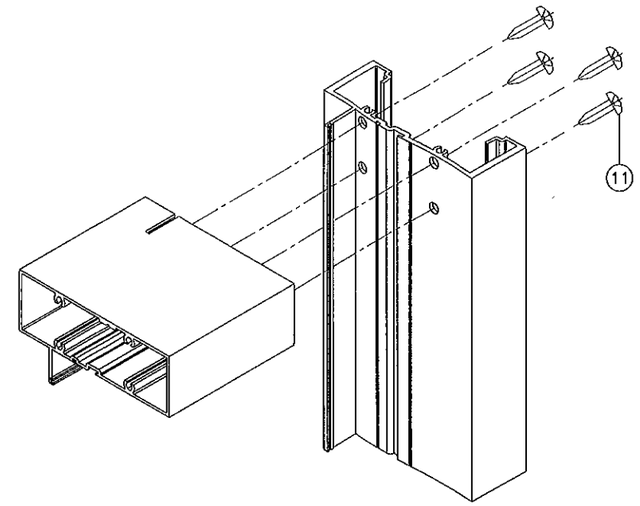

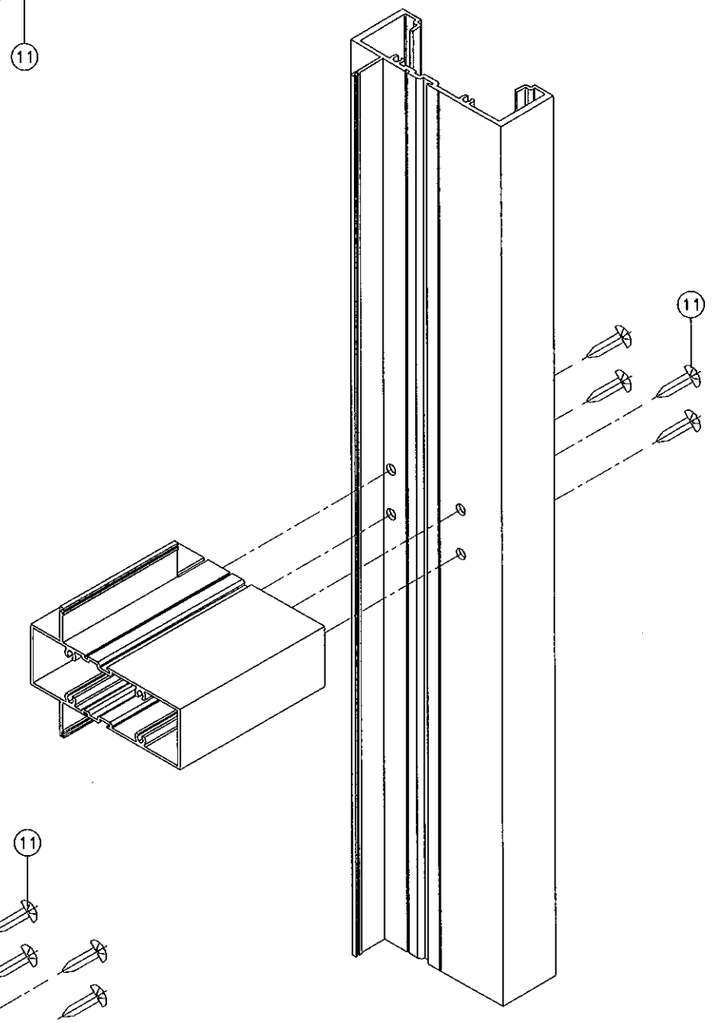

HORIZONTAL CORNER

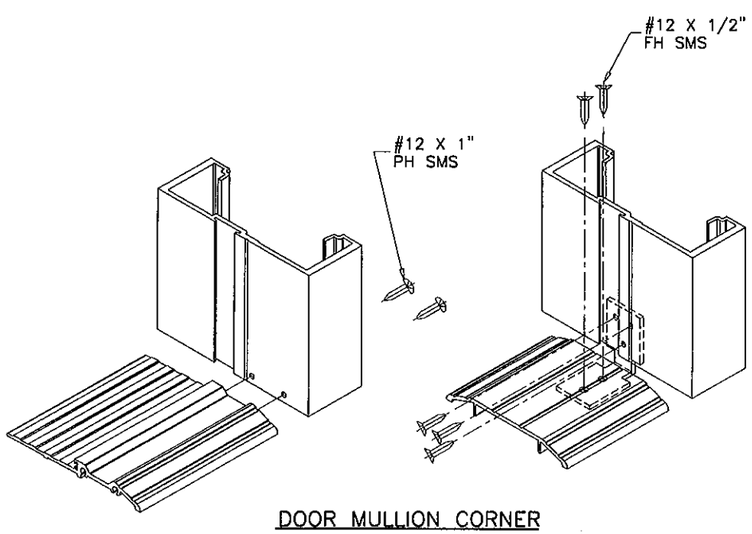

DOOR MULLION CORNER

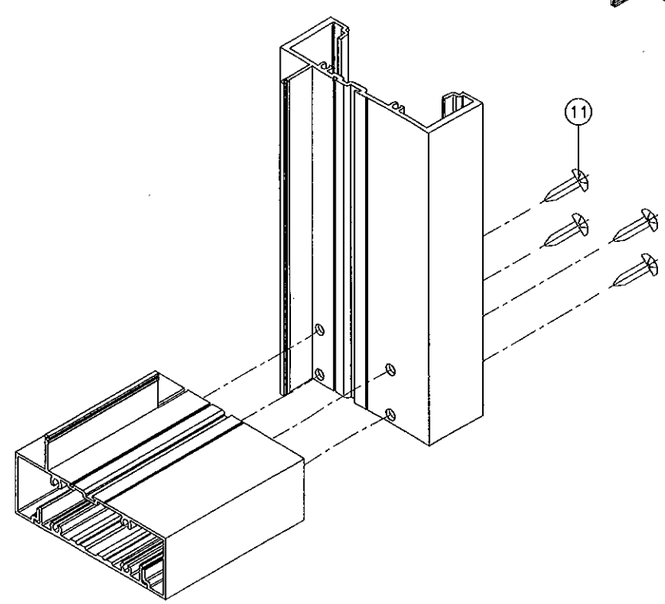

RECT. OR SQUARE CORNERS

Engr: JAVAD AHMAD
CIVIL
FLA. PE # 70592
C.A.N. 3538

PRODUCT REVISED
as complying with the Florida
Building Code
Acceptance No 12-0328.06
Expiration Date APRIL 3, 2013
By Manuel Perez
Miami Dade Product Control

MAR 07 2012

AL-FAROOQ CORPORATION
ENGINEERS & PRODUCT DEVELOPMENT
1235 S.W. 87 AVE
MIAMI, FLORIDA 33174
TEL. (305) 264-8100 FAX. (305) 262-6978
STORE\W11-39MG

SERIES MG5000 ALUM WINDOW WALL SYSTEM (L.M.I.)

MR. GLASS DOORS & WINDOWS INC.
7440 N.W. 66 STREET
MIAMI, FL. 33166
TEL. (305) 470-8284 FAX. (305) 470-8285

revisions:

no	date	by	description
A	03.05.12		NO CHANGE THIS SHEET

date: 07-15-11
scale: -
dr. by: HAMID
chk. by:

drawing no.
W11-39

sheet 12 of 12