MIAMI-DADE COUNTY
DEPARTMENT OF PERMITTING, ENVIRONMENT, AND REGULATORY AFFAIRS (PERA)
BOARD AND CODE ADMINISTRATION DIVISION

MIAMI–DADE COUNTY, FLORIDA
PRODUCT CONTROL SECTION
11805 SW 26 Street, Room 208
Miami, Florida 33175–2474
T (786) 315–2590 F (786) 315–2599
www.miamidade.gov/pera/

NOTICE OF ACCEPTANCE (NOA)

NR Architectural Products, Inc.
4348 Westroads Drive
West Palm Beach, FL 33407

SCOPE:

This NOA is being issued under the applicable rules and regulations governing the use of construction materials. The documentation submitted has been reviewed and accepted by Miami–Dade County PERA–Product Control Section to be used in Miami–Dade County and other areas where allowed by the Authority Having Jurisdiction (AHJ).

This NOA shall not be valid after the expiration date stated below. The Miami–Dade County Product Control Section (In Miami–Dade County) and/or the AHJ (in areas other than Miami–Dade County) reserve the right to have this product or material tested for quality assurance purposes. If this product or material fails to perform in the accepted manner, the manufacturer will incur the expense of such testing and the AHJ may immediately revoke, modify, or suspend the use of such product or material within their jurisdiction. PERA reserves the right to revoke this acceptance, if it is determined by Miami–Dade County Product Control Section that this product or material fails to meet the requirements of the applicable building code.

This product is approved as described herein, and has been designed to comply with the Florida Building Code, including the High Velocity Hurricane Zone.

DESCRIPTION: Series "Overhead" Aluminum/ Stainless Steel Point Support Glass System – S.M.I.

APPROVAL DOCUMENT: Drawing No. **AD11–14**, titled "**Overhead Point Support Glass System (S.M.I.)**", sheets 1 through 11 of 11, dated 02/26/12, prepared by M. C. Y. Engineering Inc., signed and sealed by Yiping Wang, P. E., bearing the Miami–Dade County Product Control Revision stamp with the Notice of Acceptance number and Expiration date by the Miami–Dade County Product Control Section.

MISSILE IMPACT RATING: Small Missile Impact Resistant.

LABELING: Each unit shall bear a permanent label with the manufacturer's name or logo, city, state, series and following statement: "Miami–Dade County Product Control Approved" unless otherwise noted herein.

RENEWAL of this NOA shall be considered after a renewal application has been filed and there has been no change in the applicable building code negatively affecting the performance of this product.

TERMINATION of this NOA will occur after the expiration date or if there has been a revision or change in the materials, use, and/ or manufacture of the product or process. Misuse of this NOA as an endorsement of any product, for sales, advertising or any other purposes shall automatically terminate this NOA. Failure to comply with any section of this NOA shall be cause for termination and removal of NOA.

ADVERTISEMENT: The NOA number preceded by the words Miami–Dade County, Florida, and followed by the expiration date may be displayed in advertising literature. If any portion of the NOA is displayed, then it shall be done in its entirety.

INSPECTION: A copy of this entire NOA shall be provided to the user by the manufacturer or its distributors and shall be available for inspection at the job site at the request of the Building Official.

This NOA **revises NOA No. 11–0608.02** and consists of this page 1, evidence page E–1, as well as approval document mentioned above.

The submitted documentation was reviewed by **Jaime D. Gascon, P. E.**

MIAMI-DADE COUNTY APPROVED

J. Gascon
6/8/12

NOTICE OF ACCEPTANCE: EVIDENCE SUBMITTED

A. DRAWINGS

1. Manufacturer's die drawings and sections.
   (Submitted under previous NOA No. 11-0608.02)
2. Drawing No. **AD11–14**, titled "**Overhead Point Support Glass System (S.M.I.)**", sheets 1 through 11 of 11, dated 02/26/12, prepared by M. C. Y. Engineering Inc., signed and sealed by Yiping Wang, P. E.

B. TESTS

1. Test reports on: 1) Air Infiltration Test, per FBC, TAS 202–94
   2) Uniform Static Air Pressure Test, Loading per FBC TAS 202–94
   3) Water Resistance Test, per FBC, TAS 202–94
   4) Small Missile Impact Test per FBC, TAS 201–94
   5) Cyclic Wind Pressure Loading per FBC, TAS 203–94

   along with marked–up drawings and installation diagram of Point Support Glass System, prepared by Hurricane Test Laboratory, LLC, Test Report No. **HTL 0242–0404–10**, dated 05/25/2011, signed and sealed by Vinu J. Abraham, P. E.
   (Submitted under previous NOA No. 11-0608.02)

C. CALCULATIONS

1. Anchor verification calculations and structural analysis, complying with FBC–2007, prepared by MCY Engineering, Inc., dated 06/04/11, signed and sealed by Yiping Wang, P. E.
   (Submitted under previous NOA No. 11-0608.02)
2. Glazing complies with ASTM E1300–04

D. QUALITY ASSURANCE

1. Miami–Dade Department of Permitting, Environment, and Regulatory Affairs (PERA).

E. MATERIAL CERTIFICATIONS

1. Notice of Acceptance No. **11–0624.02** issued to E. I. DuPont DeNemours & Co., Inc. for their "**DuPont Sentry Glass® Interlayer**" dated 05/26/2010, expiring on 01/14/17.

F. STATEMENTS

1. Statement letter of conformance, no financial interest and compliance with the FBC 2007 and FBC 2010, dated 02/24/12, signed and sealed by Yiping Wang, P. E.
2. Laboratory compliance letter for Test Report No. **HTL 0242–0404–10**, issued by Hurricane Test Laboratory, LLC, dated 05/25/2011, signed and sealed by Vinu J. Abraham, P. E.
   (Submitted under previous NOA No. 11-0608.02)

G. OTHERS

1. Notice of Acceptance No. **11–0608.02**, issued to NR Architectural Products, Inc. for their **Series "Overhead" Aluminum/ Stainless Steel Point Support Glass System – S.M.I.**, approved on 08/11/11 and expiring on 08/11/16.

Jaime D. Gascon, P. E.
Product Control Section Supervisor
NOA No. 12–0330.06
Expiration Date: August 11, 2016
Approval Date: June 21, 2012

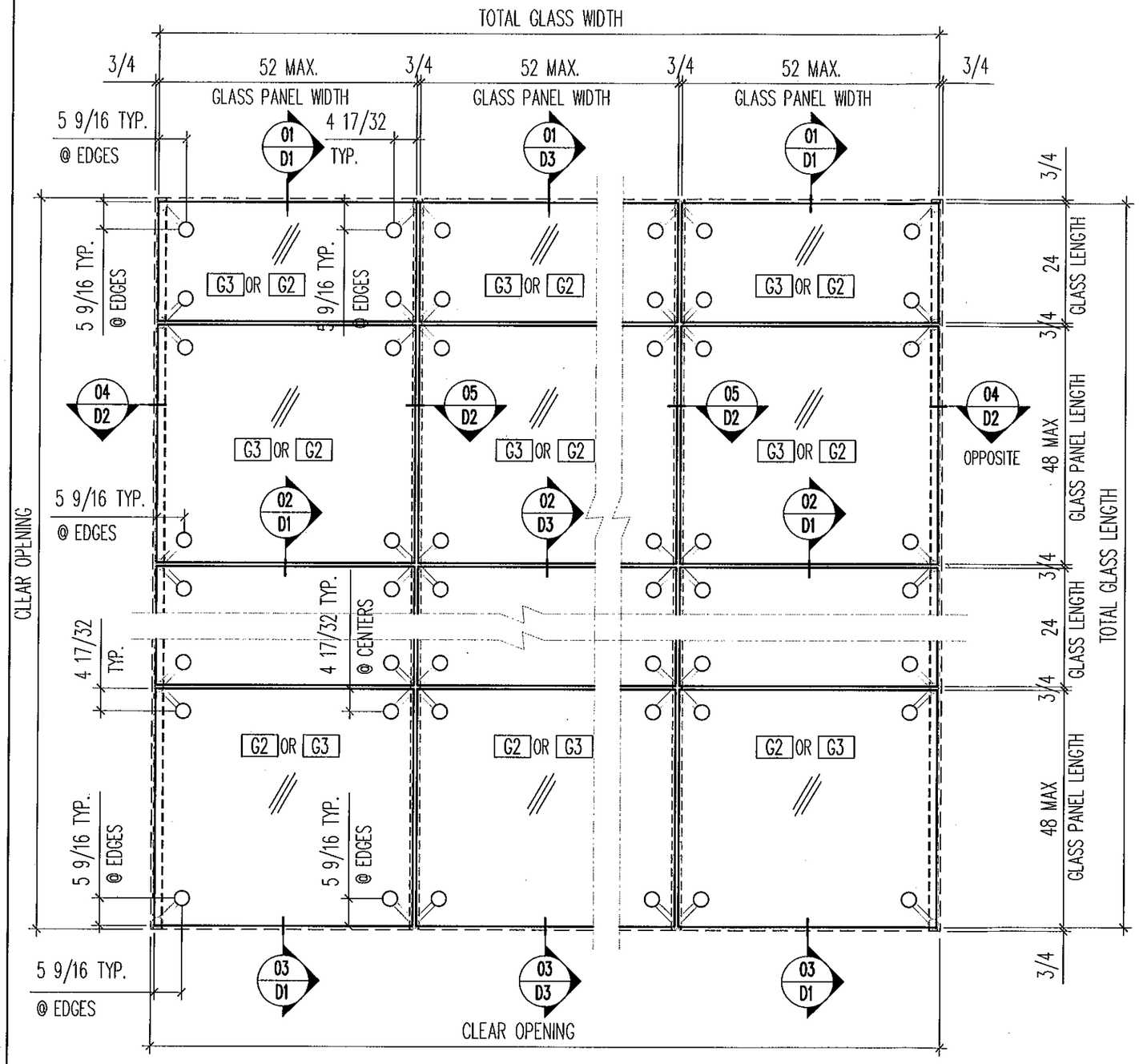

TYPICAL OVERHEAD-FOUR (4) POINT SUPPORTED GLASS

DESIGN LOAD: + 78.75 / -78.75 PSF

GENERAL NOTES:

- THIS PRODUCT HAS BEEN DESIGNED AND TESTED TO COMPLY WITH THE REQUIREMENTS OF THE FLORIDA BUILDING CODE INCLUDING HIGH VELOCITY HURRICANE ZONE (HVHZ).
- FOUR (4) OR SIX (6) OVERHEAD POINT SUPPORT GLASS SYSTEM RATED FOR SMALL MISSILE IMPACT AND SHUTTERS ARE NOT REQUIRED FOR INSTALLATION 30 FEET ABOVE GROUND LEVEL.
- THESE OVERHEAD POINT SUPPORT GLASS SYSTEM ARE APPROVED FOR AIR AND WATER INFILTRATION.
- CODE REQUIREMENTS FOR SAFEGUARDS MUST BE OBSERVED.
- ANCHORING OR LOADING CONDITIONS NOT SHOWN IN THESE DETAILS ARE NOT PART OF THIS APPROVAL.
- MATERIALS INCLUDING BUT NOT LIMITED TO STEEL/METAL SCREWS THAT COME INTO CONTACT WITH OTHER DISSIMILAR MATERIALS SHALL MEET THE FBC REQUIREMENTS. SECTION 2003.8.4
- SUPPORTING STRUCTURES NOT BY NR ARCHITECTURAL PRODUCTS MUST SUPPORT LOADS IMPOSED BY POINT SUPPORT GLASS SYSTEM AND TRANSFER THEM TO THE BUILDING STRUCTURE.
- GLASS CAPACITY ARE BASED ON ASTM E1300-04 (3 SECS. GUEST)
- ALL DIMENSION UNIT NOT SPECIFIED SHOULD BE IN INCHES.

PRODUCT REVISED
as complying with the Florida Building Code
Acceptance No. 12-0330.06
Expiration Date 8/11/2016
By
Miami Dade Product Control
MIAMI DADE COUNTY

YIPING WANG, P.E.
FLORIDA REGISTRATION
PE #55983
C.A.N. 28877
STATE OF FLORIDA
PROFESSIONAL ENGINEER

MAR 08 2012

REVISIONS	
NO.	DATE	DESCRIPTION

MCY ENGINEERING, INC.
GLAZING CONSULTANTS
8501 SW 124 AVE. STE. 205A
MIAMI, FL 33183
P: 305.271.0117
F: 786.573.5063
www.MCYEngineering.com
MCY.Engineering@Att.net

OVERHEAD POINT SUPPORT GLASS SYSTEM (S.M.I.)
NR ARCHITECTURAL PRODUCTS
4348 WESTROADS DRIVE
WEST PALM BEACH, FL 33407
P: (561) 844-1121 F: (561) 844-6131

DATE	02-26-12
SCALE	AS NOTED
DRAWN	S.L.
PROJECT	11-036

DRAWING NO.
AD11-14

SHEET 1 of 11

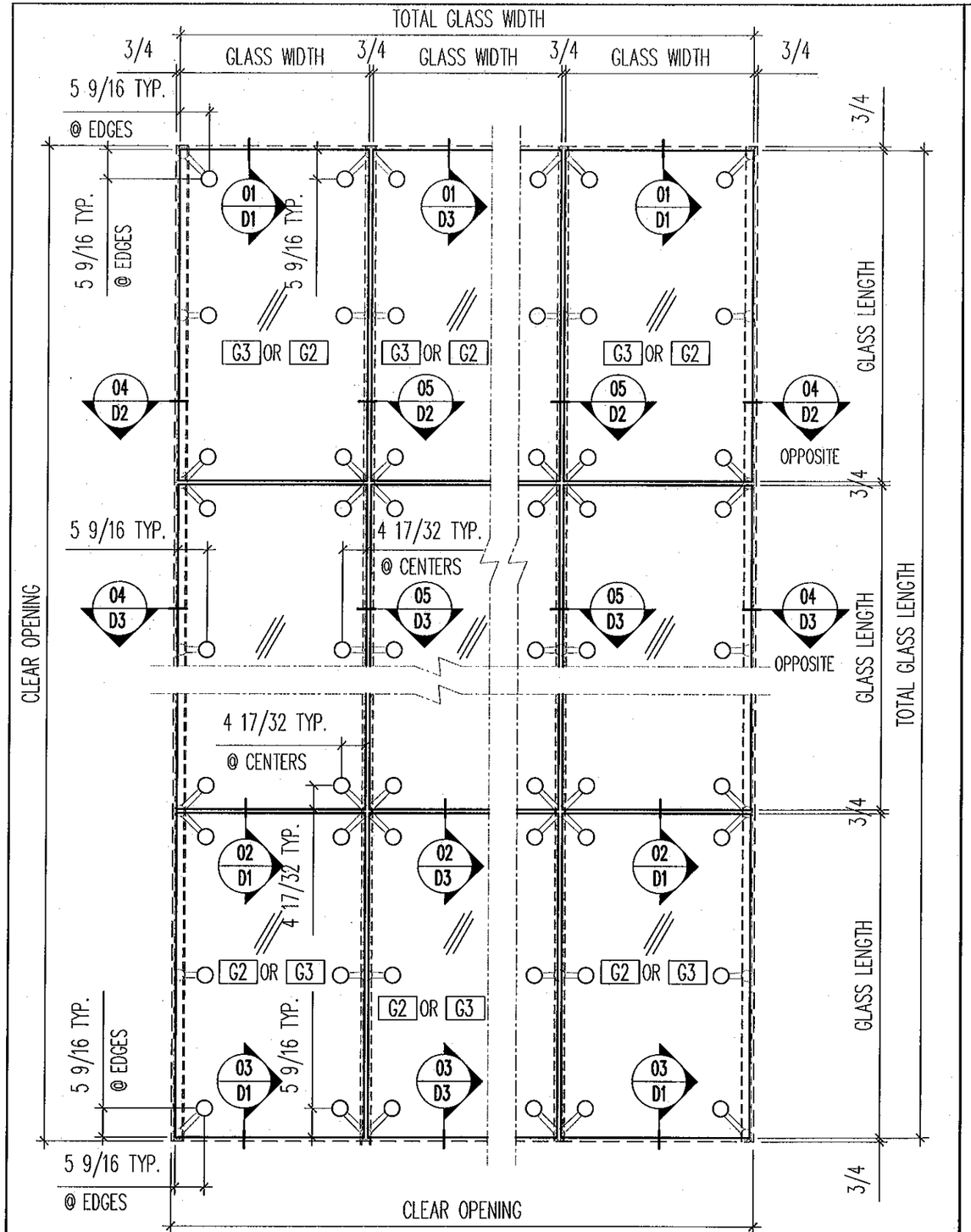

TYPICAL OVERHEAD-SIX (6) POINT SUPPORTED GLASS

DESIGN LOAD: REFER TO SHEET 5 OF 10

GLASS SPECS:

G2 12.8 (1/2") LAMINATED VISION GLASS
5.7 (1/4") TEMPERED + 0.060 DUPONT SENTRYGLAS IONOPLAST + 5.7 (1/4") TEMPERED

G3 11/16" LAMINATED VISION GLASS
1/4" CLEAR HEAT STRNGHTENED + 0.060 DUPONT SENTRYGLAS IONOPLAST + 3/8" CLEAR TEMP.

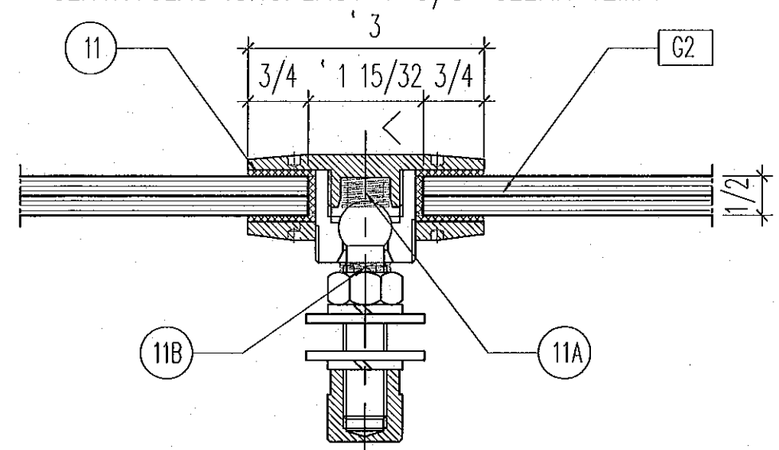

GLASS G2: WITH ROUTEL PS-11

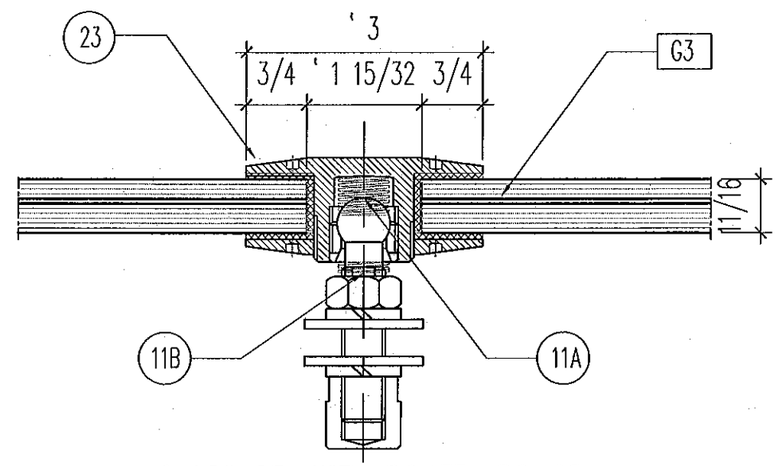

GLASS G3: WITH ROUTEL PS-23

PRODUCT REVISED
as complying with the Florida Building Code
Acceptance No 12-0330.06
Expiration Date 8/11/2016
By
Miami Dade Product Control
MIAMI DADE COUNTY

YIPING WANG, P.E.
FLORIDA REGISTRATION
P.E. #55983
C.A.N. 28697
STATE OF FLORIDA
PROFESSIONAL ENGINEER
MAR 08 2012

REVISIONS		
NO.	DATE	DESCRIPTION

MCY ENGINEERING, INC.
GLAZING CONSULTANTS
8501 SW 124 AVE. STE. 205A
MIAMI, FL 33183
P: 305.271.0117
F: 786.573.5063
www.MCYEngineering.com
MCY.Engineering@Att.net

OVERHEAD POINT SUPPORT GLASS SYSTEM (S.M.I.)

NR ARCHITECTURAL PRODUCTS
4348 WESTROADS DRIVE
WEST PALM BEACH, FL 33407
P: (561) 844 - 1121 F: (561) 844 - 6131

DATE	02-26-12
SCALE	AS NOTED
DRAWN	S.L.
PROJECT	11-038

DRAWING NO.
AD11-14

SHEET 2 of 11

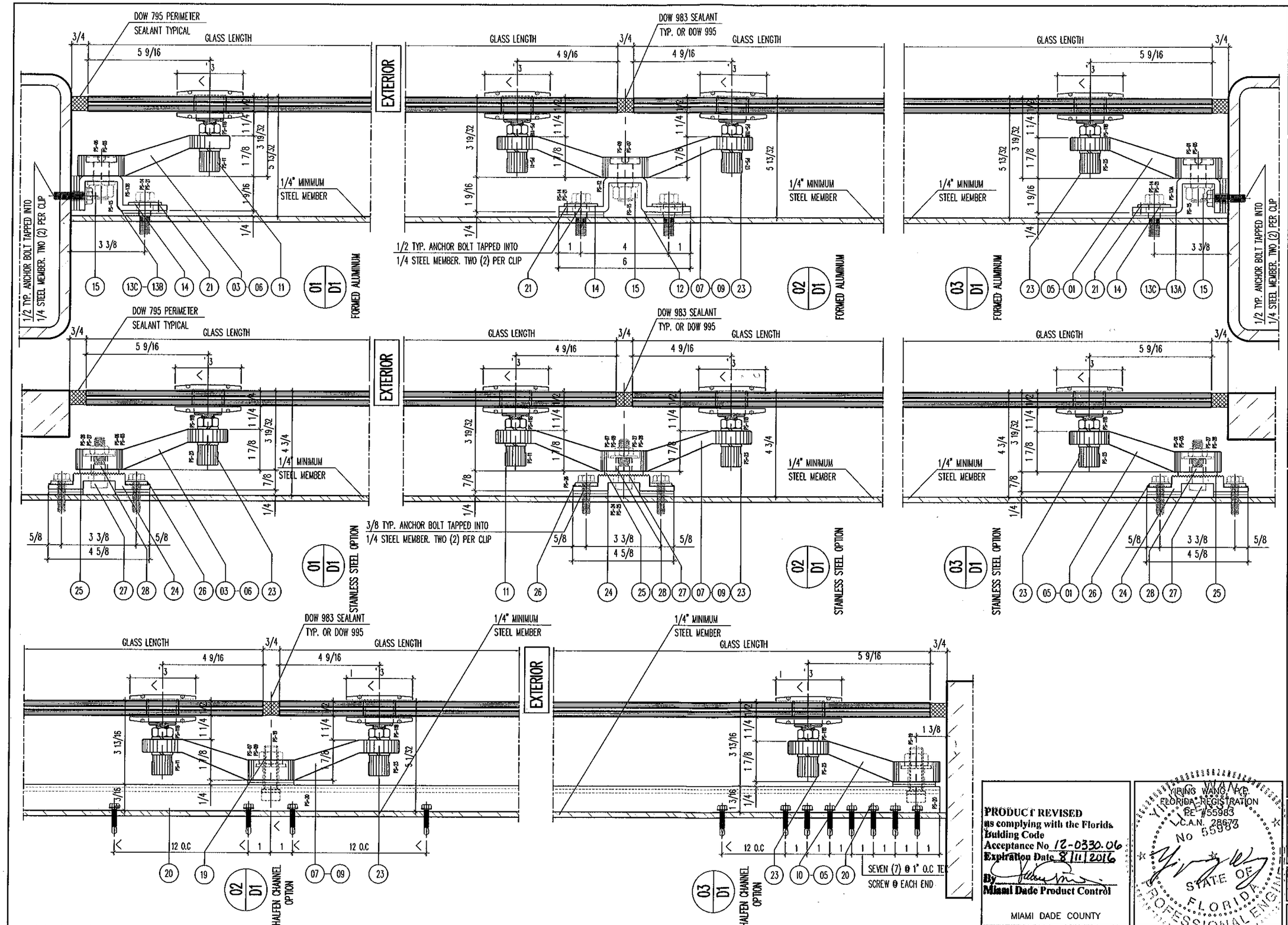

REVISIONS		
NO.	DATE	DESCRIPTION

MCY ENGINEERING, INC.
GLAZING CONSULTANTS
8501 SW 124 AVE. STE. 205A
MIAMI, FL. 33183
P: 305.271.0117
F: 786.573.5063
www.MCYEngineering.com
MCY.Engineering@Att.net

OVERHEAD POINT SUPPORT GLASS SYSTEM (S.M.I.)

NR ARCHITECTURAL PRODUCTS
4348 WESTROADS DRIVE
WEST PALM BEACH, FL 33407
P: (561) 844 - 1121 F: (561) 844 - 6131

DATE	02-26-12
SCALE	AS NOTED
DRAWN	S.L
PROJECT	11-038

DRAWING NO. AD11-14

SHEET 3 of 11

PRODUCT REVISED
as complying with the Florida Building Code
Acceptance No 12-0330.06
Expiration Date 8/11/2016
By
Miami Dade Product Control
MIAMI DADE COUNTY

YIPING WANG, P.E.
FLORIDA REGISTRATION
P.E. #55983
C.A.N. 28677
No 55983
STATE OF FLORIDA
PROFESSIONAL ENGINEER

MAR 08 2012

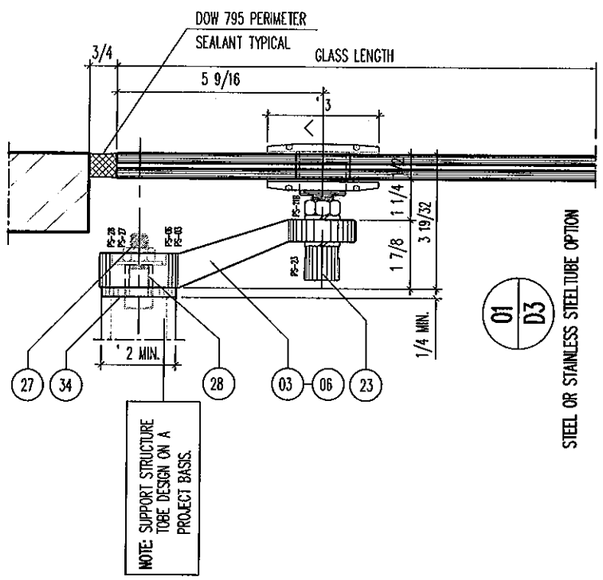

01 / D3

STEEL OR STAINLESS STEELTUBE OPTION

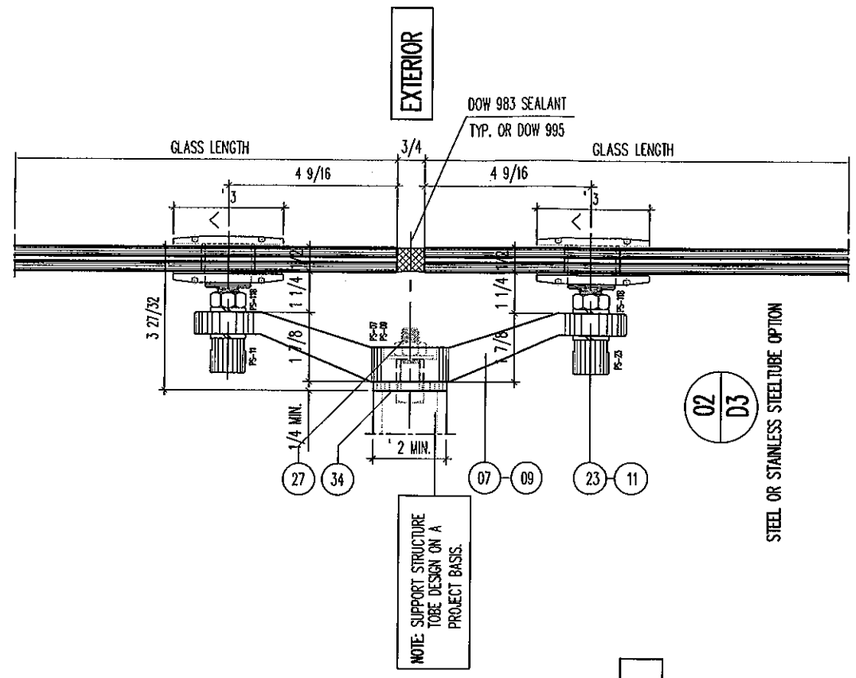

02 / D3

STEEL OR STAINLESS STEELTUBE OPTION

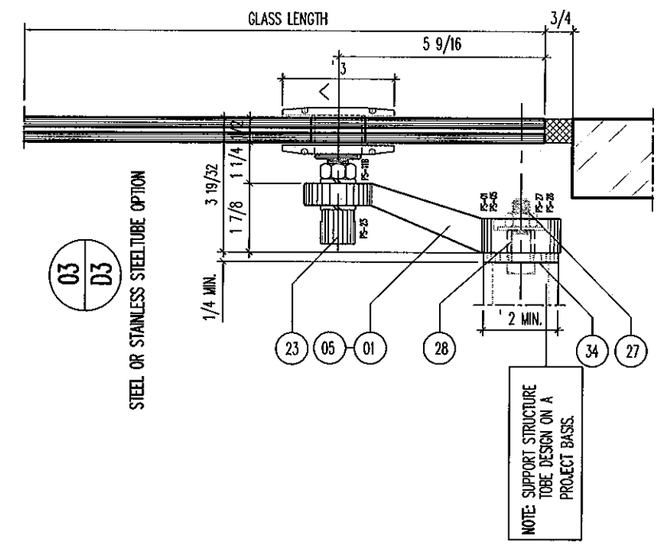

03 / D3

STEEL OR STAINLESS STEELTUBE OPTION

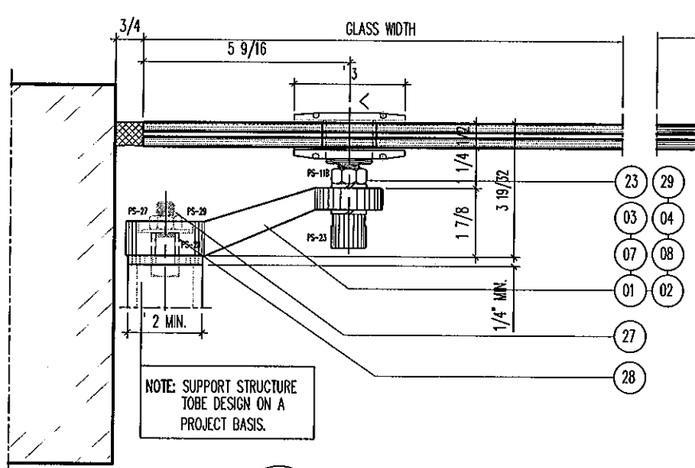

04 / D3

STEEL OR STAINLESS STEELTUBE OPTION

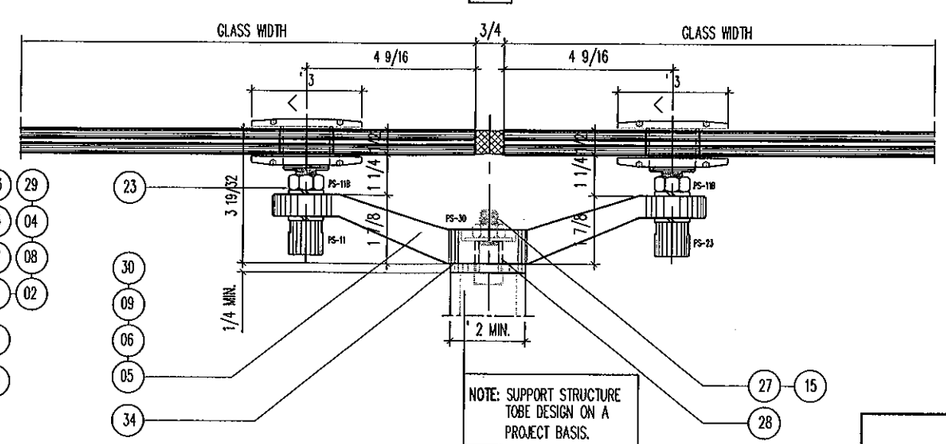

05 / D3

STEEL OR STAINLESS STEELTUBE OPTION

PRODUCT REVISED
as complying with the Florida Building Code
Acceptance No. 12-0330.06
Expiration Date 8/11/2016
By
Miami Dade Product Control

MIAMI DADE COUNTY

YIPING WANG, P.E.
FLORIDA REGISTRATION
PE #55983
C.A.N. 26877
STATE OF FLORIDA
PROFESSIONAL ENGINEER

MAR 08 2012

REVISIONS	
NO. DATE	DESCRIPTION

MCY ENGINEERING, INC.
GLAZING CONSULTANTS
8501 SW 124 AVE. STE. 205A
MIAMI, FL 33183
P: 305.271.0117
F: 786.573.5063
www.MCYEngineering.com
MCY.Engineering@Att.net

OVERHEAD POINT SUPPORT GLASS SYSTEM (S.M.I.)

NR ARCHITECTURAL PRODUCTS

4348 WESTROADS DRIVE
WEST PALM BEACH, FL. 33407
P: (561) 844 - 1121 F: (561) 844 - 6131

DATE	02-28-12
SCALE	AS NOTED
DRAWN	S.L.
PROJECT	11-038

DRAWING NO.
AD11-14

SHEET 4 of 11

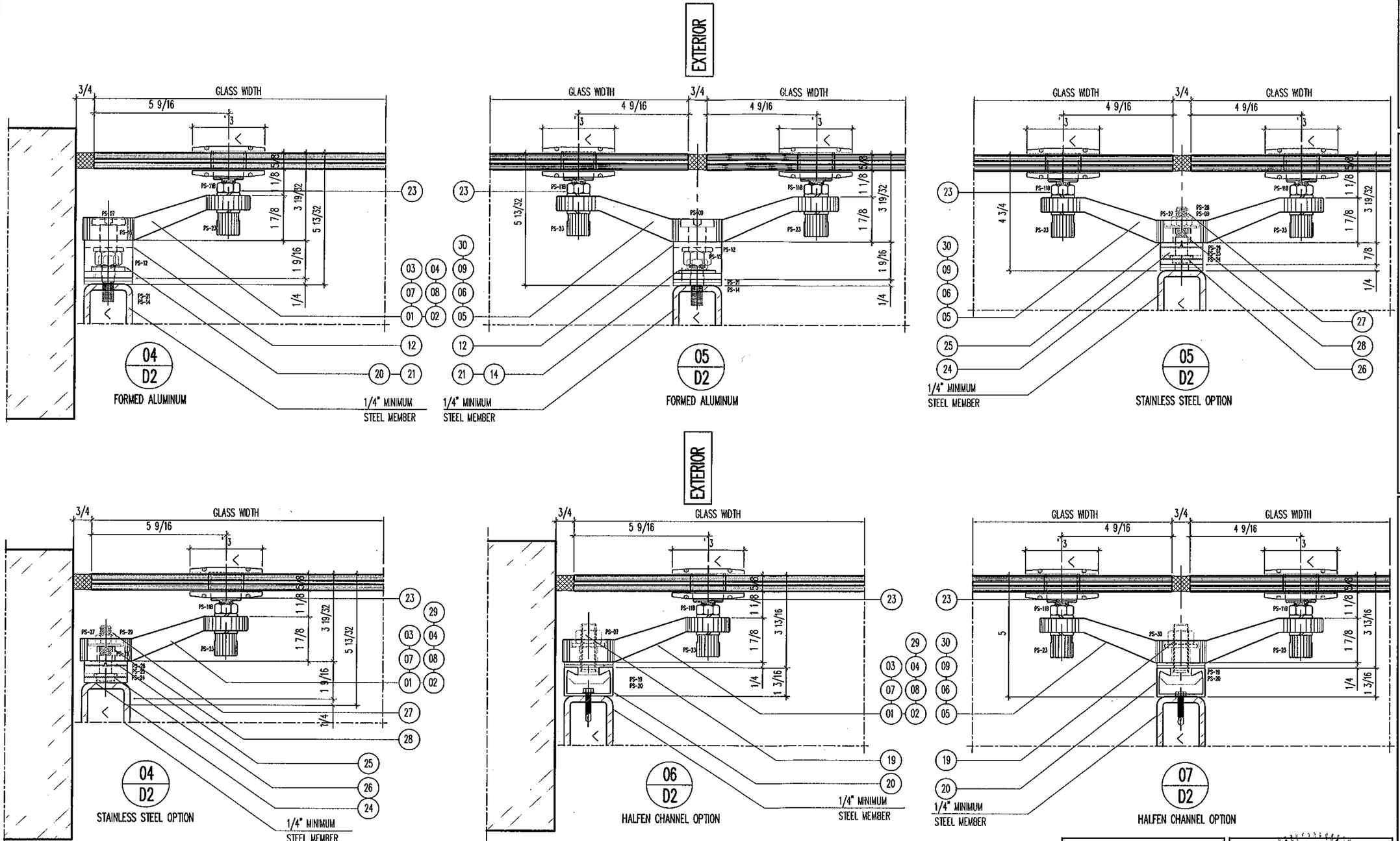

REVISIONS	
NO./DATE	DESCRIPTION

MCY ENGINEERING, INC.
GLAZING CONSULTANTS
8501 SW 124 AVE. STE. 205A
MIAMI, FL 33183
P: 305.271.0117
F: 786.573.5063
www.MCYEngineering.com
MCY.Engineering@Att.net

OVERHEAD POINT SUPPORT GLASS SYSTEM (S.M.I.)

NR ARCHITECTURAL PRODUCTS

4348 WESTROADS DRIVE
WEST PALM BEACH, FL. 33407
P: (561) 844 - 1121 F: (561) 844 - 6131

DATE	02-28-12
SCALE	AS NOTED
DRAWN	S.L.
PROJECT	11-038

DRAWING NO.
AD11-14

SHEET 5 of 11

PRODUCT REVISED
as complying with the Florida
Building Code
Acceptance No. 12-0330.06
Expiration Date 8/11/2016
By
Miami Dade Product Control
MIAMI DADE COUNTY

YIPING WANG, P.E.
FLORIDA REGISTRATION
P.E. #55983
C.A.N. 28677
No 55983
STATE OF FLORIDA
PROFESSIONAL ENGINEER

MAR 08 2012

GLASS CONFIG.: FOUR (4) POINT SUPPORT

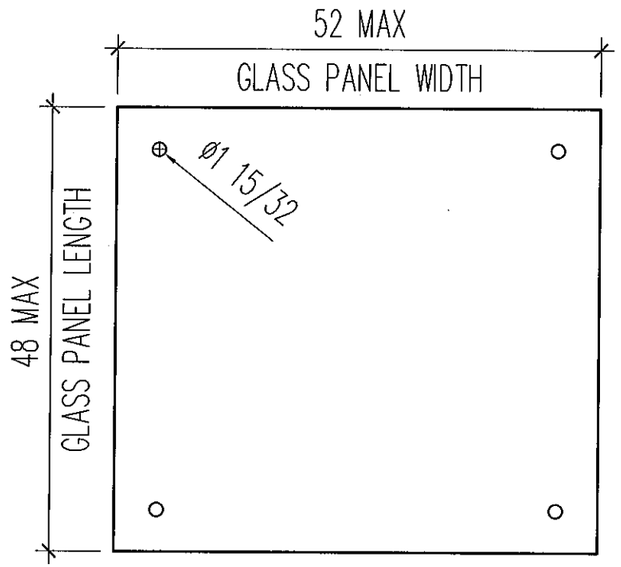

TYPICAL GLASS ELEVATION

GLASS CONFIG.: SIX (6) POINT SUPPORT

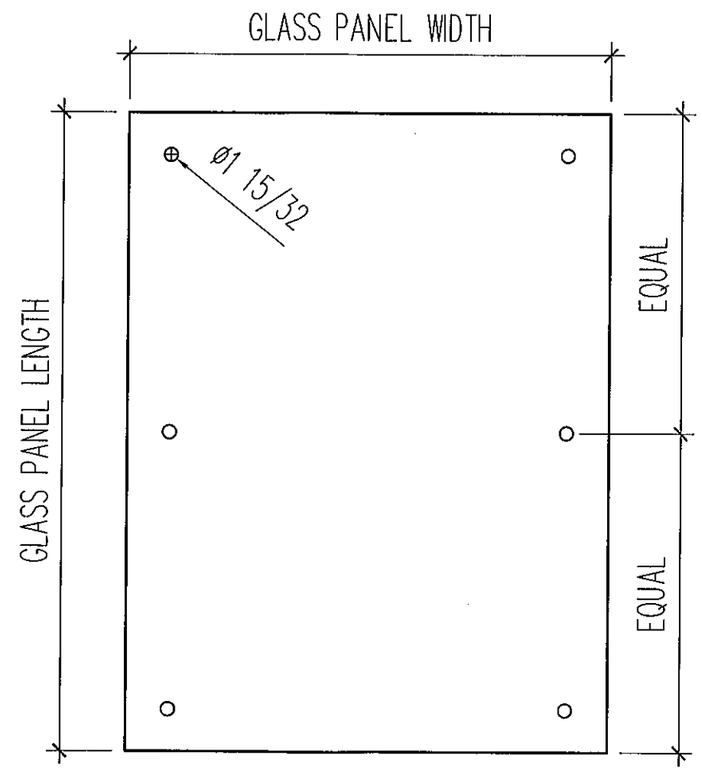

TYPICAL GLASS ELEVATION

SIX (6) POINT SUPPORT GLASS DESIGN LOAD CHART		
WIDTH-IN	LENGTH-IN	DP (PSF)
41-1/2"	60"	78.75
40-1/4"	62"	78.75

PRODUCT REVISED
as complying with the Florida
Building Code
Acceptance No. 12-0330.06
Expiration Date 8/11/2016
By
Miami Dade Product Control

MIAMI DADE COUNTY

YIPING WANG, P.E.
FLORIDA REGISTRATION
PE #55983
C.A.(N. 28677
STATE OF FLORIDA
PROFESSIONAL ENGINEER

MAR 08 2012

REVISIONS	
NO. DATE	DESCRIPTION

MCY ENGINEERING, INC.
GLAZING CONSULTANTS
8501 SW 124 AVE. STE. 205A
MIAMI, FL 33183
P: 305.271.0117
F: 786.573.5063
www.MCYEngineering.com
MCY.Engineering@Att.net

OVERHEAD POINT SUPPORT GLASS SYSTEM (S.M.I.)

NR ARCHITECTURAL PRODUCTS

4348 WESTROADS DRIVE
WEST PALM BEACH, FL 33407
P: (561) 844 - 1121 F: (561) 844 - 6131

DATE	02-28-12
SCALE	AS NOTED
DRAWN	S.L.
PROJECT	11-038

DRAWING NO.
AD11-14

SHEET 6 of 11

(01) STAINLESS STEEL 316

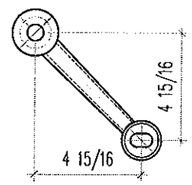

PS-01: SINGLE ARM (TOP LEFT)

(06) STAINLESS STEEL 316

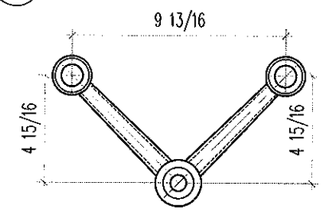

PS-06 DOUBLE ARM (BOTTOM CENTER)

(11A) STAINLESS STEEL

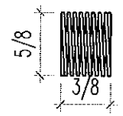

PS-11A REDUX SPRING ' 5/8" X 3/8" HIGH INTERNAL SPRING TYPE 17-7

(13C) 3003-H14

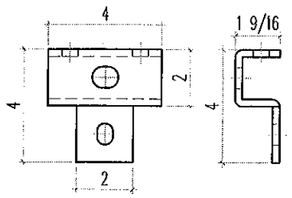

PS-13C 3" LONG FORMED BRACKET

(02) STAINLESS STEEL 316

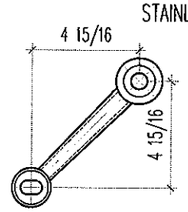

PS-02: SINGLE ARM (TOP RIGHT)

(07) STAINLESS STEEL 316

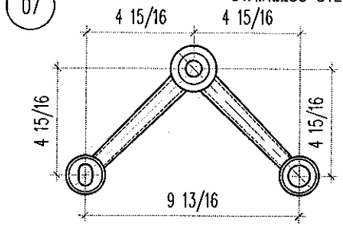

PS-07 DOUBLE ARM (JAMB LEFT)

(11B) STAINLESS STEEL

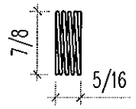

PS-11B REDUX SPRING ' 7/8" X 5/16" HIGH EXTERNAL SPRING TYPE 17-7 S/S

(14) 3004-H14

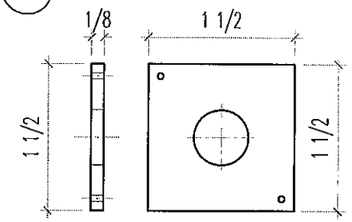

PS-14 1/8"X1-1/2"X1-1/2" ALU-LOCKING PLA

(03) STAINLESS STEEL 316

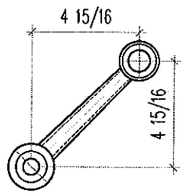

PS-03 SINGLE ARM (BOTTOM LEFT)

(08) STAINLESS STEEL 316

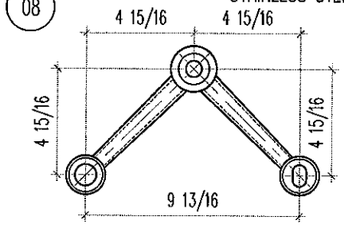

PS-08 DOUBLE ARM (JAMB RIGHT)

(12) 3003-H14

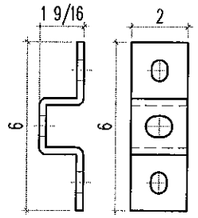

PS-12 2" LONG FORMED BRACKET

(15) STAINLESS STEEL A4

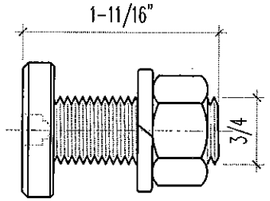

PS-15 ' 3/4"X1-11/16" SOCKET HD. BOLT

(04) STAINLESS STEEL 316

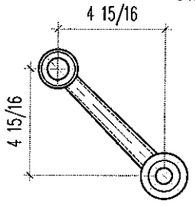

PS-04 SINGLE ARM (BOTTOM RIGHT)

(09) STAINLESS STEEL 316

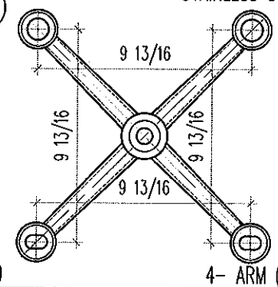

PS-09 4- ARM (CENTER)

(13A) 3003-H14

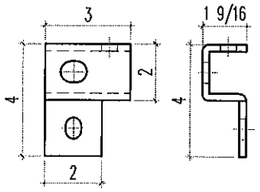

PS-13A 3" LONG FORMED BRACKET

(19) GRADE 8.8 GALVANIZED

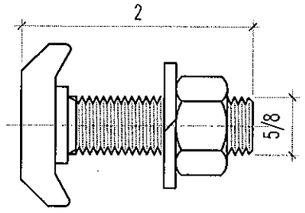

PS-19 BH651 M16 (' 5/8") HALFEN T-BOLT

(05) STAINLESS STEEL 316

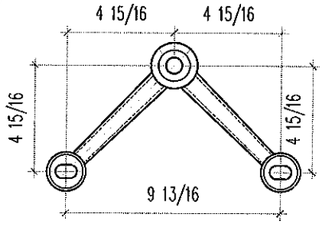

PS-05 DOUBLE ARM (TOP CENTER)

(11) STAINLESS STEEL 316

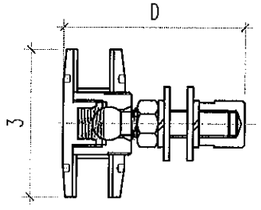

PS-11 ' 3" ROUTEL ASSEMBLY

(13B) 3003-H14

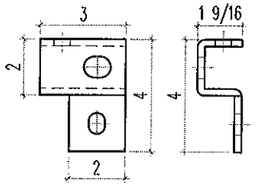

PS-13B 3" LONG FORMED BRACKET

BILL OF MATERIALS:

ITEM #	PART #	DESRIPTION	MATERIAL
01	PS-01	TOP LEFT 1-ARM SPIDER	STAINLESS STEEL 316
02	PS-02	TOP RIGHT 1-ARM SPIDER	STAINLESS STEEL 316
03	PS-03	BOTTOM LEFT 1-ARM SPIDER	STAINLESS STEEL 316
04	PS-04	BOTTOM RIGHT 1-RM SPIDER	STAINLESS STEEL 316
05	PS-05	TOP CENTER 2-ARM SPIDER	STAINLESS STEEL 316
06	PS-06	BOTTOM CENTER 2-ARM SPIDER	STAINLESS STEEL 316
07	PS-07	LEFT JAMB 2-ARM SPIDER	STAINLESS STEEL 316
08	PS-08	RIGHT JAMB 2-ARM SPIDER	STAINLESS STEEL 316
09	PS-09	CENTER 4-ARM SPIDER	STAINLESS STEEL 316
11	PS-11	' 3" SPIDER ROUTEL	STAINLESS STEEL 316
11A	PS-11A	REDUX SPRING ' 5/8" X 3/8" HIGH INTERNAL SPRING TYPE 17-7	STAINLESS STEEL
11B	PS-11B	REDUX SPRING ' 7/8" X 5/16" HIGH EXTERNAL SPRING TYPE 17-7	STAINLESS STEEL
12	PS-12	1/4" THK-2"X6" FORMED BRACKET	3003-H14 ALUMINUM
13A	PS-13A	1/4" THK-3"X4" FORMED BRACKET	3003-H14 ALUMINUM
13B	PS-13B	1/4" THK-3"X4" FORMED BRACKET	3003-H14 ALUMINUM
13C	PS-13C	1/4" THK-3"X4" FORMED BRACKET	3003-H14 ALUMINUM
14	PS-14	1/8" THK-ALU-LOCKING PLATE	3003-H14 ALUMINUM
15	PS-15	' 3/4"X1-11/16" SOCKET HD. BOLT	STAINLESS STEEL A4
19	PS-19	BH651 M16 (' 5/8") HALFEN BOLT	GRADE 8.8 GALV.
20	PS-20	HZM 38/23 HALFEN CHANNEL	GRADE 8.8 GALV.

PRODUCT REVISED
as complying with the Florida Building Code
Acceptance No 12-0330.06
Expiration Date 8/11/2016
By
Miami Dade Product Control
MIAMI DADE COUNTY

YIRING WANG, P.E.
FLORIDA REGISTRATION
PE #55983
C.A.N. 28677
No 55983
STATE OF FLORIDA
PROFESSIONAL ENGINEER

MAR 08 2012

REVISIONS

NO.	DATE	DESCRIPTION

MCY ENGINEERING, INC.
GLAZING CONSULTANTS
8501 SW 124 AVE. STE. 205A
MIAMI, FL 33183
P: 305.271.0117
F: 786.573.5063
www.MCYEngineering.com
MCY.Engineering@Att.net

OVERHEAD POINT SUPPORT GLASS SYSTEM (S.M.I.)

NR ARCHITECTURAL PRODUCTS
4348 WESTROADS DRIVE
WEST PALM BEACH, FL 33407
P: (561) 844 - 1121 F: (561) 844 - 6131

DATE	02-28-12
SCALE	AS NOTED
DRAWN	S.L
PROJECT	11-038

DRAWING NO.
AD11-14

SHEET 7 of 11

(21) STAINLESS STEEL (C43 ROCKWELL HARDNESS)

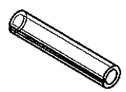

PS-21 ' 1/16"X3/8" LG. SLOTTED DRIVE PIN

(27) STAINLESS STEEL 316

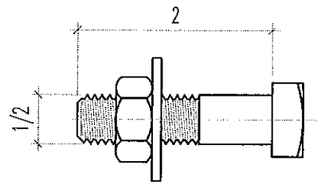

PS-27 ' 1/2"-13X2" SQHMB BASE FITTING BOLT

(23) STAINLESS STEEL 316

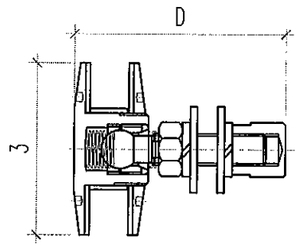

PS-23 ' 3" ROUTEL ASSEMBLY

(28) STAINLESS STEEL

PS-28 ' 23/32" O.D X ' 1/2" I.D X 21/32" LONG SPIDER BUSHIN

(24) STAINLESS STEEL 316

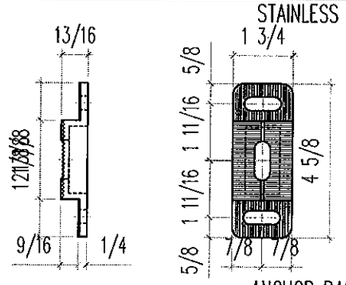

PS-24 ANCHOR BASE FITTING

(29) STAINLESS STEEL 316

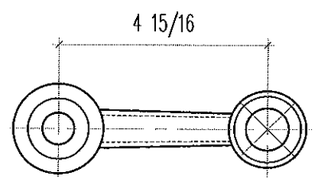

PS-29 SINGLE ARM (JAMB CENTER)

(25) STAINLESS STEEL 316

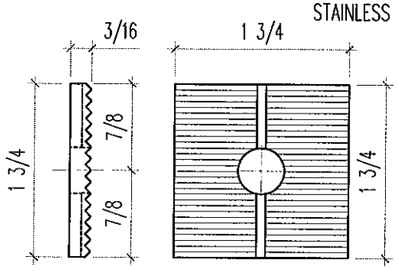

PS-25 ANCHOR BASE FITTING PLATE

(30) STAINLESS STEEL 316

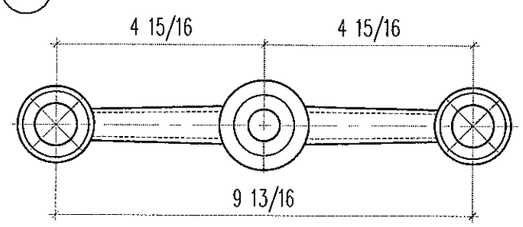

PS-30 DOUBLE ARM (CENTER)

(26) STAINLESS STEEL 316

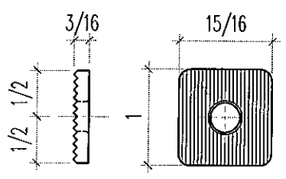

PS-26 ANCHOR BASE FITTING PLATE

(31) STEEL OR STAINLESS STEEL 316

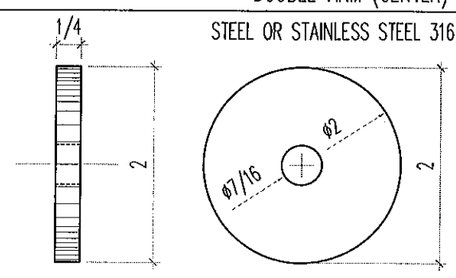

PS-34 ANCHOR BASE PLATE

BILL OF MATERIALS:

ITEM #	PART #	DESRIPTION	MATERIAL
21	PS-21	' 1/16"X3/8" LG. DRIVE PIN	S/S (C43 ROCKWELL HARDNESS)
23	PS-23	' 3" SPIDER ROUTEL	STAINLESS STEEL 316
24	PS-24	ANCHOR BASE FITTING	STAINLESS STEEL 316
25	PS-25	ANCHOR BASE FITTING PLATE	STAINLESS STEEL 316
26	PS-26	ANCHOR BASE FITTING PLATE	STAINLESS STEEL 316
27	PS-27	' 1/2"-13X2" SQHMB FITTING BOLT	STAINLESS STEEL 316
28	PS-28	' 23/32"O.D X ' 1/2"I.D X 21/32" LG. SPIDER BUSHING	STAINLESS STEEL 316
29	PS-29	JAMB CENTER 1-ARM SPIDER	STAINLESS STEEL 316
30	PS-30	CENTER 2-ARM SPIDER	STAINLESS STEEL 316
31	PS-34	1/4" THK-' 2" SPIDER BASE PLATE	STAINLESS STEEL 316 OR STEEL

REVISIONS

NO.	DATE	DESCRIPTION

MCY ENGINEERING, INC.
GLAZING CONSULTANTS
8501 SW 124 AVE. STE. 205A
MIAMI, FL 33183
P: 305.271.0117
F: 786.573.5063
www.MCYEngineering.com
MCY.Engineering@Att.net

OVERHEAD POINT SUPPORT GLASS SYSTEM (S.M.I.)

NR ARCHITECTURAL PRODUCTS

4348 WESTROADS DRIVE
WEST PALM BEACH, FL 33407
P: (561) 844 - 1121 F: (561) 844 - 6131

DATE	02-28-12
SCALE	AS NOTED
DRAWN	S.I.
PROJECT	11-038

DRAWING NO. AD11-14

SHEET 8 of 11

PRODUCT REVISED
as complying with the Florida Building Code
Acceptance No. 12-0330.06
Expiration Date 8/11/2016
By
Miami Dade Product Control

MIAMI DADE COUNTY

YIPING WANG, P.E.
FLORIDA REGISTRATION
PE #55983
C.A.N. 28674
No 55983
STATE OF FLORIDA
PROFESSIONAL ENGINEER

MAR 08 2012

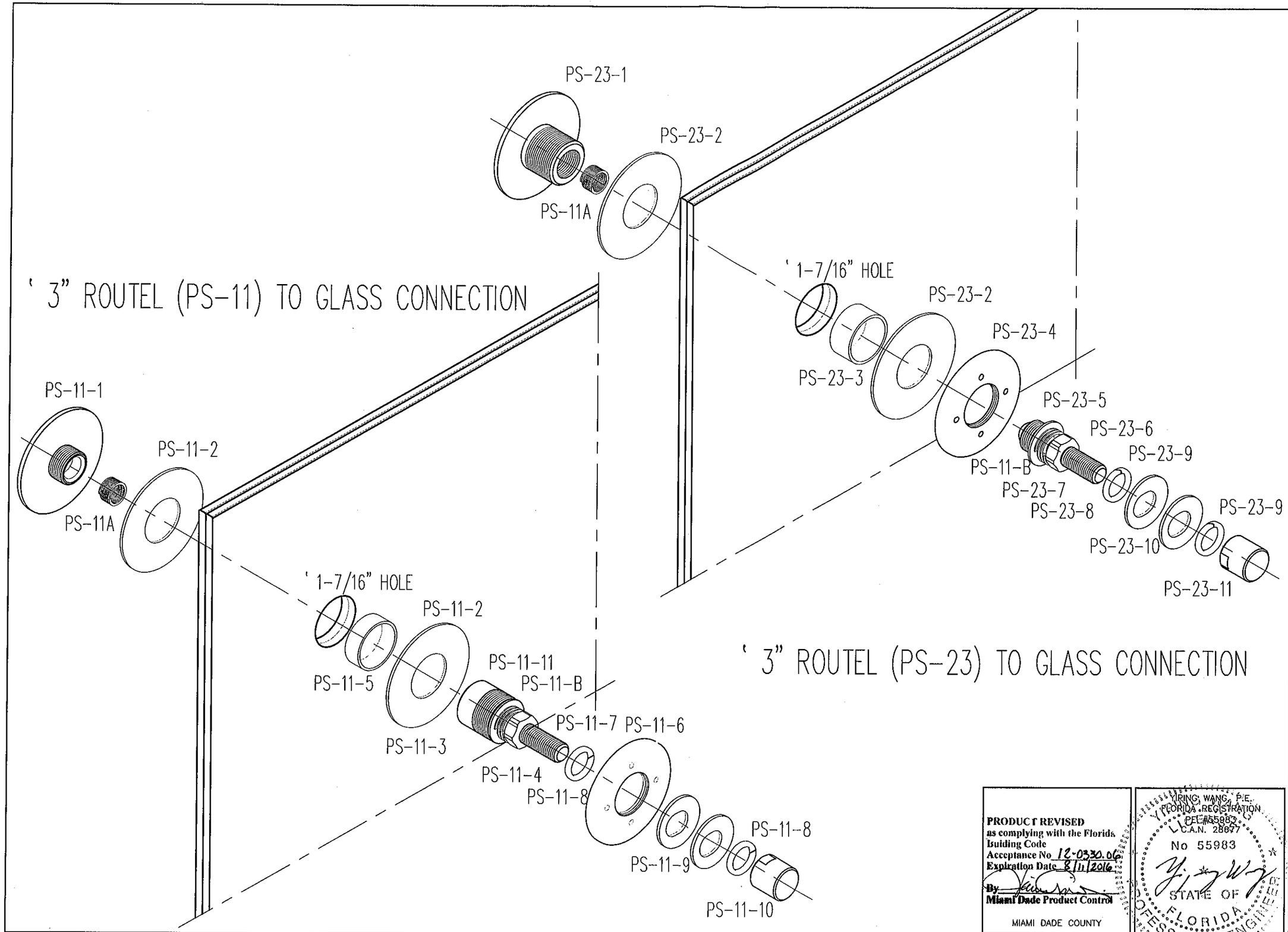

PRODUCT REVISED
as complying with the Florida
Building Code
Acceptance No. 12-0330.06
Expiration Date 8/1/2016
By
Miami Dade Product Control
MIAMI DADE COUNTY

YIPING WANG, P.E.
FLORIDA REGISTRATION
P.E. #55983
L.C.A.N. 28677
No 55983
STATE OF FLORIDA
PROFESSIONAL ENGINEER

MAR 08 2012

REVISIONS	
NO. DATE	DESCRIPTION

MCY ENGINEERING, INC.
GLAZING CONSULTANTS
8501 SW 124 AVE. STE. 205A
MIAMI, FL. 33183
P: 305.271.0117
F: 786.573.5063
www.MCYEngineering.com
MCY.Engineering@Att.net

OVERHEAD POINT SUPPORT GLASS SYSTEM (S.M.I.)

NR ARCHITECTURAL PRODUCTS
4348 WESTROADS DRIVE
WEST PALM BEACH, FL 33407
P: (561) 844 - 1121 F: (561) 844 - 6131

DATE	02-28-12
SCALE	AS NOTED
DRAWN	S.L.
PROJECT	11-038

DRAWING NO.
AD11-14

SHEET 9 of 11

SPIDER CONNECTION DETAIL

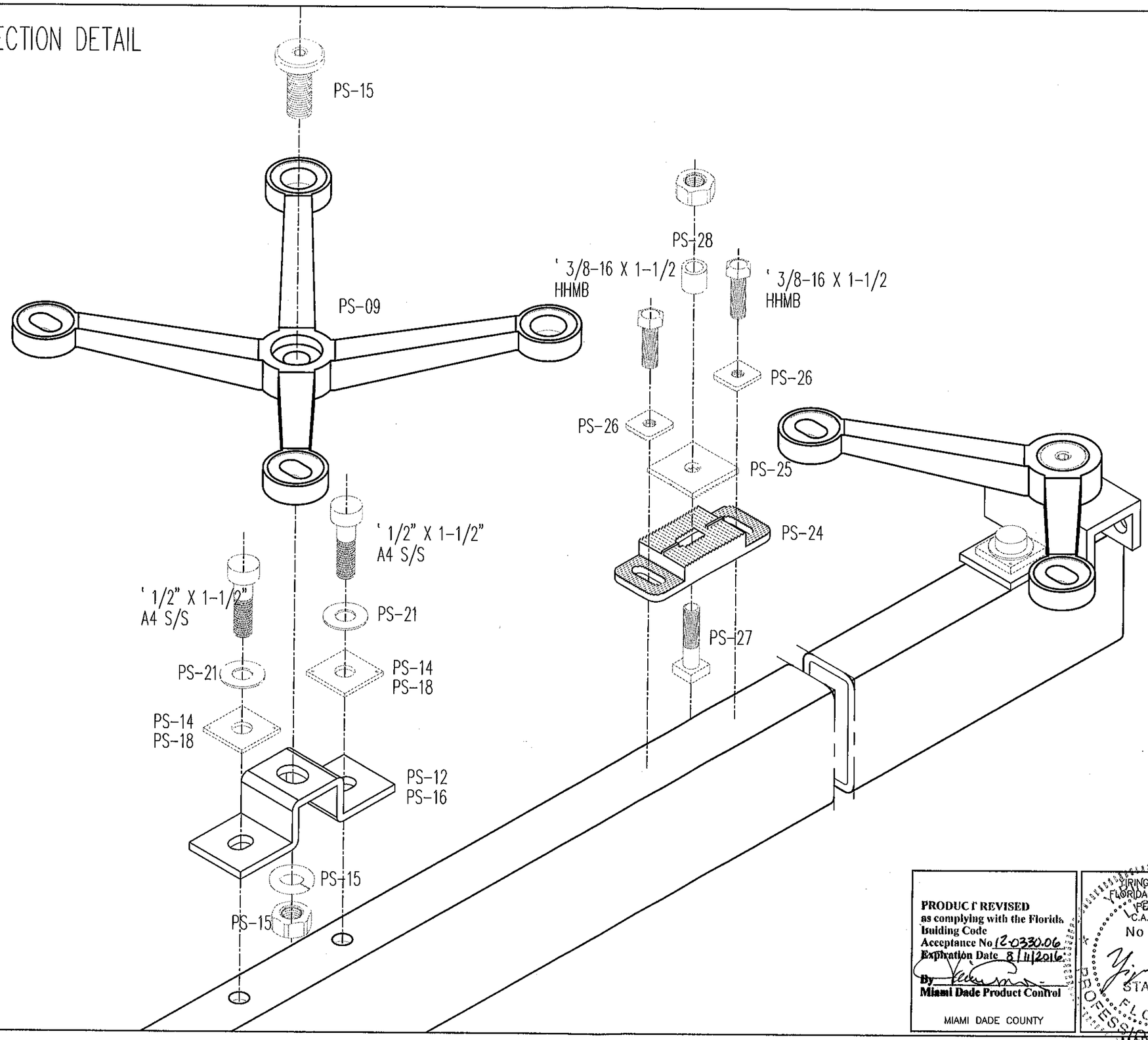

REVISIONS	
NO. DATE	DESCRIPTION

MCY ENGINEERING, INC.
GLAZING CONSULTANTS
8501 SW 124 AVE. STE. 205A
MIAMI, FL 33183
P: 305.271.0117
F: 786.573.5063
www.MCYEngineering.com
MCY.Engineering@Att.net

OVERHEAD POINT SUPPORT GLASS SYSTEM (S.M.I.)

NR ARCHITECTURAL PRODUCTS
4348 WESTROADS DRIVE
WEST PALM BEACH, FL 33407
P: (561) 844 - 1121 F: (561) 844 - 6131

DATE	02-26-12
SCALE	AS NOTED
DRAWN	S.L.
PROJECT	11-038

DRAWING NO.
AD11-14

SHEET 10 of 11

PRODUCT REVISED
as complying with the Florida Building Code
Acceptance No 12-0330.06
Expiration Date 8/1/2016
By
Miami Dade Product Control

MIAMI DADE COUNTY

YIRING WANG, P.E.
FLORIDA REGISTRATION
PE #55983
C.A.N. 28679
No 55983
STATE OF FLORIDA
PROFESSIONAL ENGINEER

MAR 08 2012

GLASS INSTALLATION AND CONNECTION DETAIL

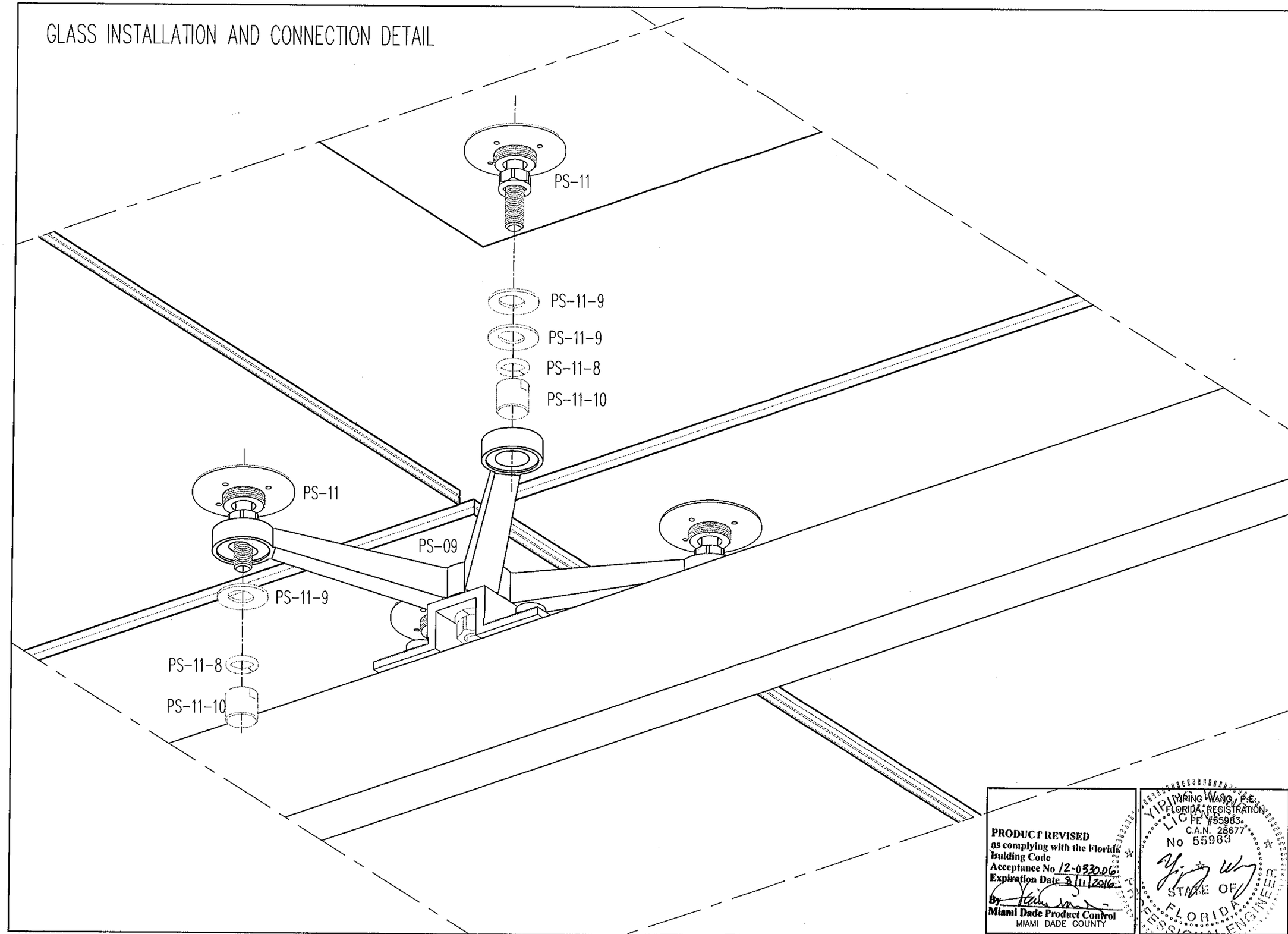

REVISIONS	
NO. DATE	DESCRIPTION

MCY ENGINEERING, INC.
GLAZING CONSULTANTS
8501 SW 124 AVE. STE. 205A
MIAMI, FL 33183
P: 305.271.0117
F: 786.573.5063
www.MCYEngineering.com
MCY.Engineering@Att.net

OVERHEAD POINT SUPPORT GLASS SYSTEM (S.M.I.)

NR ARCHITECTURAL PRODUCTS
4348 WESTROADS DRIVE
WEST PALM BEACH, FL 33407
P: (561) 844 - 1121 F: (561) 844 - 6131

DATE	02-26-12
SCALE	AS NOTED
DRAWN	S.L
PROJECT	11-038

DRAWING NO.
AD11-14

SHEET 11 of 11

PRODUCT REVISED
as complying with the Florida Building Code
Acceptance No 12-0330.06
Expiration Date 8/11/2016
By
Miami Dade Product Control
MIAMI DADE COUNTY

YIPING WANG, P.E.
FLORIDA REGISTRATION
PE #55983
C.A.N. 28677
LICENSE No 55983
STATE OF FLORIDA
PROFESSIONAL ENGINEER

MAR 08 2012