MIAMI-DADE COUNTY
DEPARTMENT OF PERMITTING, ENVIRONMENT, AND REGULATORY AFFAIRS (PERA)
BOARD AND CODE ADMINISTRATION DIVISION

MIAMI–DADE COUNTY, FLORIDA
PRODUCT CONTROL SECTION
11805 SW 26 Street, Room 208
Miami, Florida 33175–2474
T (786) 315–2590 F (786) 315–2599
www.miamidade.gov/pera/

NOTICE OF ACCEPTANCE (NOA)

R. C. Aluminum Industries, Inc.
2805 NW 75th Ave
Miami, FL 33122

SCOPE:

This NOA is being issued under the applicable rules and regulations governing the use of construction materials. The documentation submitted has been reviewed and accepted by Miami–Dade County PERA–Product Control Section to be used in Miami–Dade County and other areas where allowed by the Authority Having Jurisdiction (AHJ).

This NOA shall not be valid after the expiration date stated below. The Miami–Dade County Product Control Section (In Miami–Dade County) and/or the AHJ (in areas other than Miami–Dade County) reserve the right to have this product or material tested for quality assurance purposes. If this product or material fails to perform in the accepted manner, the manufacturer will incur the expense of such testing and the AHJ may immediately revoke, modify, or suspend the use of such product or material within their jurisdiction. PERA reserves the right to revoke this acceptance, if it is determined by Miami–Dade County Product Control Section that this product or material fails to meet the requirements of the applicable building code.

This product is approved as described herein, and has been designed to comply with the Florida Building Code, including the High Velocity Hurricane Zone.

DESCRIPTION: Series "FX-3580" Aluminum Window Wall System – L.M.I.

APPROVAL DOCUMENT: Drawing No. **W08–89**, titled "Series FX3580 Alum. Window Wall System (L.M.I.)", sheets 1 through 07 of 07, dated 05/09/04, prepared by AL–Farooq Corporation, with latest revised "**A**" dated 03/05/12, signed and sealed by Javad Ahmad, P. E., bearing the Miami–Dade County Product Control Revision stamp with the Notice of Acceptance number and Expiration date by the Miami–Dade County Product Control Section.

MISSILE IMPACT RATING: Large and Small Missile Impact Resistant.

LABELING: Each unit shall bear a permanent label with the manufacturer's name or logo, city, state, series and following statement: "Miami–Dade County Product Control Approved" unless otherwise noted herein.

RENEWAL of this NOA shall be considered after a renewal application has been filed and there has been no change in the applicable building code negatively affecting the performance of this product.

TERMINATION of this NOA will occur after the expiration date or if there has been a revision or change in the materials, use, and/ or manufacture of the product or process. Misuse of this NOA as an endorsement of any product, for sales, advertising or any other purposes shall automatically terminate this NOA. Failure to comply with any section of this NOA shall be cause for termination and removal of NOA.

ADVERTISEMENT: The NOA number preceded by the words Miami–Dade County, Florida, and followed by the expiration date may be displayed in advertising literature. If any portion of the NOA is displayed, then it shall be done in its entirety.

INSPECTION: A copy of this entire NOA shall be provided to the user by the manufacturer or its distributors and shall be available for inspection at the job site at the request of the Building Official.

This NOA **revises NOA No. 09–0128.15** and consists of this page 1, evidence pages E–1 and E–2, as well as approval document mentioned above.

The submitted documentation was reviewed by **Jaime D. Gascon, P. E.**

MIAMI-DADE COUNTY APPROVED

J. Gascon
6/8/12

NOTICE OF ACCEPTANCE: EVIDENCE SUBMITTED

A. DRAWINGS

1. Manufacturer's die drawings and sections.
   (Submitted under previous NOA No. 09–0128.15)
2. Drawing No. **W08–89**, titled "Series FX3580 Alum. Window Wall System (L.M.I.)", sheets 1 through 07 of 07, dated 05/09/04, prepared by AL–Farooq Corporation, with latest revised "**A**" dated 03/05/12, signed and sealed by Javad Ahmad, P. E.

B. TESTS

1. Test reports on: 1) Air Infiltration Test, per FBC, TAS 202–94
   2) Uniform Static Air Pressure Test, Loading per FBC TAS 202–94
   3) Water Resistance Test, per FBC, TAS 202–94
   4) Large Missile Impact Test per FBC, TAS 201–94
   5) Cyclic Wind Pressure Loading per FBC, TAS 203–94
   6) Forced Entry Test, Side–Hinged Door Systems, per FBC 2411.3.2.1, TAS 202–94 and per AAMA 1304–02

   along with marked–up drawings and installation diagram of aluminum outswing door, prepared by Fenestration Testing Laboratory, Inc., Test Reports No.'s:
   1. **FTL–5537** and **FTL–5507** dated 02/12/08 and 05/02/08, all signed and sealed by Carlos S. Rionda, P. E.
      (Submitted under previous NOA No. 09–0128.15)

C. CALCULATIONS

1. Anchor verification calculations and structural analysis, complying with FBC, prepared by AL–Farooq Corporation, dated 10/30/08, signed and sealed by Dr. Humayoun Farooq, P. E.
   (Submitted under previous NOA No. 09–0128.15)
2. **Glazing complies with ASTM E 1300–04**

D. QUALITY ASSURANCE

1. Miami–Dade Department of Permitting, Environment, and Regulatory Affairs (PERA).

E. MATERIAL CERTIFICATIONS

1. Notice of Acceptance No. **11–0624.02** issued to E.I. DuPont DeNemours & Co., Inc. for their **"DuPont Sentry Glass® Interlayer"** dated 05/26/2010, expiring on 01/14/17.

Jaime D. Gascon, P. E.
Product Control Section Supervisor
NOA No. 12–0330.07
Expiration Date: March 18, 2014
Approval Date: June 14, 2012

NOTICE OF ACCEPTANCE: EVIDENCE SUBMITTED

F. STATEMENTS

1. Statement letter of no financial interest, conformance and compliance with the **FBC–2010**, dated 03/02/12, signed and sealed by Javad Ahmad, P. E.
2. Laboratory compliance letters prepared by Fenestration Testing Laboratory, Inc., for Test Reports No.'s:
   I. **FTL–5537** and **FTL–5507** dated 02/12/08 and 05/02/08, all signed and sealed by Carlos S. Rionda, P. E.
   (Submitted under previous NOA No. 09–0128.15)
3. Proposal issued by Product Control:
   I. No. **07–2806**, dated 09/14/07, signed by Manuel Perez, P. E.
   (Submitted under previous NOA No. 09–0128.15)

G. OTHERS

1. Notice of Acceptance No. **09–0128.15**, issued to R. C. Aluminum Industries, Inc., for their Series "**FX–3580 Aluminum Window Wall System – L.M.I.**", approved on 03/18/09 and expiring on 03/18/14.

Jaime D. Gascon, P. E.
Product Control Section Supervisor
NOA No. 12–0330.07
Expiration Date: March 18, 2014
Approval Date: June 14, 2012

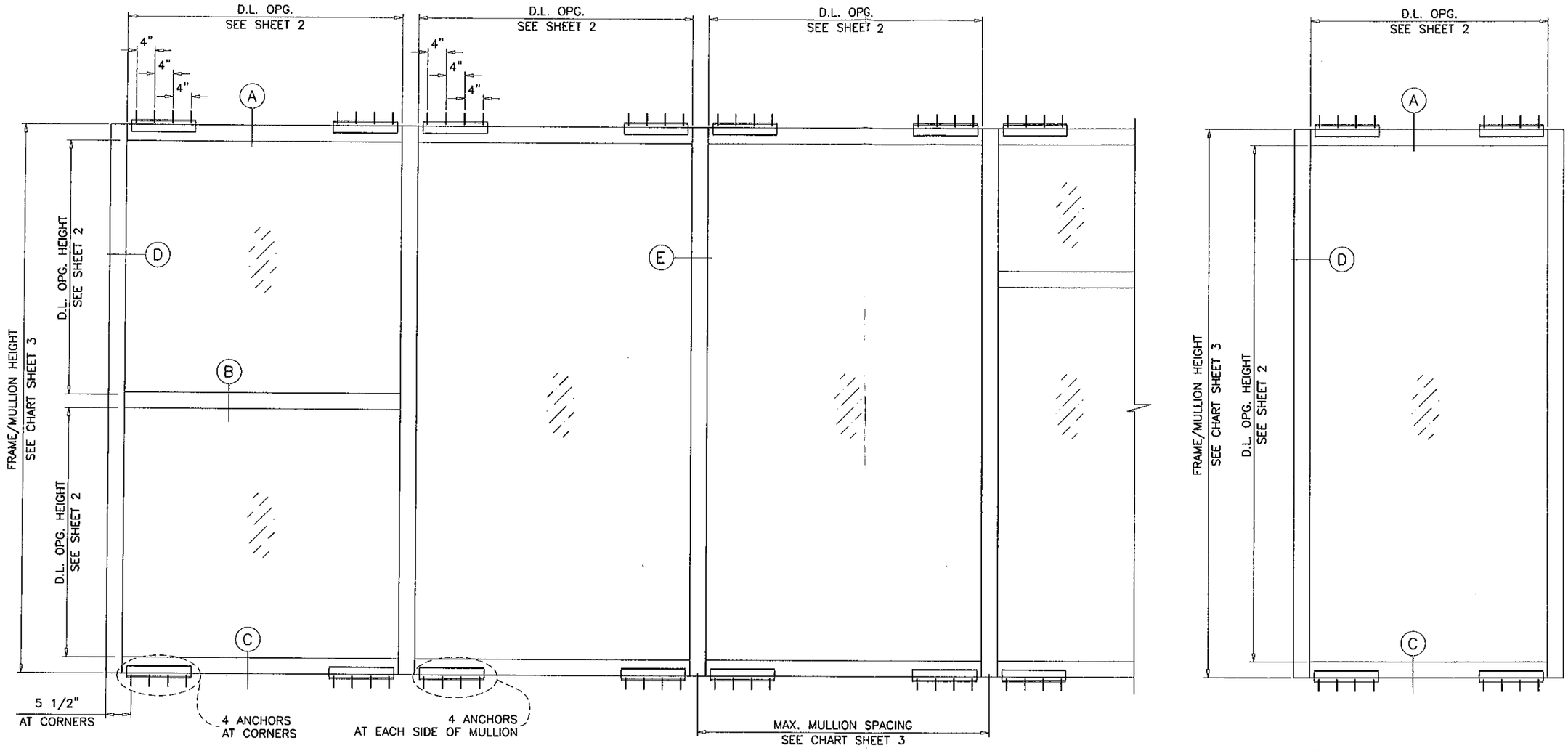

TYPICAL ELEVATIONS

PRODUCT REVISED
as complying with the Florida
Building Code
Acceptance No 12-0330.07
Expiration Date ~~03/18~~/2014
By
Miami Dade Product Control

THIS SYSTEM IS RATED FOR LARGE AND SMALL MISSILE IMPACT. SHUTTERS ARE NOT REQUIRED.

PRODUCT COMPLIES WITH REQUIREMENTS OF ANSI Z97.1.

LAMINATED GLASS
LARGE MISSILE IMPACT

FX3580 ALUMINUM WINDOW WALL SYSTEM

THIS SYSTEM MAY BE USED IN CONJUNCTION WITH MIAMI-DADE COUNTY APPR'D SMALL MISSILE IMPACT RESISTANT DOORS. FOR CONNECTION DETAILS TO MULLION SEE SEPARATE DOOR NOA.

THIS PRODUCT HAS BEEN DESIGNED AND TESTED TO COMPLY WITH THE REQUIREMENTS OF THE FLORIDA BUILDING CODE INCLUDING HIGH VELOCITY HURRICANE ZONE (HVHZ).

ANCHORS SHALL BE AS LISTED, SPACED AS SHOWN ON DETAILS, ANCHORS EMBEDMENT TO BASE MATERIAL SHALL BE BEYOND WALL DRESSING OR STUCCO.

ANCHORING OR LOADING CONDITIONS NOT SHOWN IN THESE DETAILS ARE NOT PART OF THIS APPROVAL.

MATERIALS INCLUDING BUT NOT LIMITED TO STEEL/METAL SCREWS, THAT COME INTO CONTACT WITH OTHER DISSIMILAR MATERIALS SHALL MEET THE REQUIREMENTS OF THE FLORIDA BLDG. CODE SECTION 2003.8.4.

INSTRUCTIONS:

USE CHARTS AS FOLLOWS.

STEP 1 DETERMINE DESIGN WIND LOAD REQUIREMENT BASED ON WIND VELOCITY, BLDG. HEIGHT, WIND ZONE USING APPLICABLE ASCE 7 STANDARD.

STEP 2 SEE CHARTS ON SHEET 2 FOR DESIGN LOAD CAPACITY OF DESIRED GLASS SIZE.

STEP 3 CHECK MULLION CAPACITY FOR A GIVEN SPACING AND HEIGHT USING CHARTS ON SHEET 3. THE CAPACITY SHOULD EXCEED THE DESIGN LOAD.

STEP 4 THE LOWEST VALUE RESULTING FROM STEPS 2 AND 3 SHALL APPLY TO ENTIRE SYSTEM.

Engr: JAVAD AHMAD
CIVIL
FLA. PE # 70592
C.A.N. 3538

MAR 09 2012

AL-FAROOQ CORPORATION
ENGINEERS & PRODUCT DEVELOPMENT
1235 S.W. 87 AVE
MIAMI, FLORIDA 33174
TEL. (305) 264-8100 FAX. (305) 262-6978
COMP-ANL\W08-89RC

FX3580 ALUM. WINDOW WALL SYSTEM (L.M.I.)

R.C. ALUMINUM INDUSTRIES INC.
2805 N.W. 75 TH AVE.
MIAMI, FL. 33122
TEL. (305) 592-1515 FAX. (305) 592-2184

revisions:

no	date	by	description
A	03.05.12		UPDATED TO 2010 FBC

date: 11-03-08
scale: 1/2"=1'-0"
dr. by: HAMID
chk. by:

drawing no.
W08-89

GLASS DESIGN LOAD CAPACITY - PSF		
NOMINAL DIMS		9/16" LAM. GLASS
D.L.O. WIDTH	D.L.O. HEIGHT	EXT. (+) INT. (-)
36"	60"	160.0
39"		160.0
42"		160.0
45"		160.0
48"		160.0
51"		160.0
54"		160.0
57"		160.0
60"		160.0
63"		160.0
66"		100.0
69"		100.0
72"		100.0
75"		100.0
78"		100.0
36"	66"	160.0
39"		160.0
42"		160.0
45"		160.0
48"		160.0
51"		160.0
54"		160.0
57"		160.0
60"		100.0
63"		100.0
66"		100.0
69"		100.0
72"		100.0
75"		100.0
78"		100.0
36"	72"	160.0
39"		160.0
42"		160.0
45"		160.0
48"		160.0
51"		160.0
54"		160.0
57"		100.0
60"		100.0
63"		100.0
66"		100.0
69"		100.0
72"		100.0
75"		100.0
78"		100.0

GLASS DESIGN LOAD CAPACITY - PSF		
NOMINAL DIMS		9/16" LAM. GLASS
D.L.O. WIDTH	D.L.O. HEIGHT	EXT. (+) INT. (-)
36"	78"	160.0
39"		160.0
42"		160.0
45"		160.0
48"		160.0
51"		100.0
54"		100.0
57"		100.0
60"		100.0
63"		100.0
66"		100.0
69"		100.0
72"		100.0
75"		100.0
78"		100.0
36"	84"	160.0
39"		160.0
42"		160.0
45"		159.4
48"		100.0
51"		100.0
54"		100.0
57"		100.0
60"		100.0
63"		100.0
66"		100.0
69"		100.0
72"		100.0
75"		100.0
78"		100.0
36"	90"	160.0
39"		160.0
42"		160.0
45"		100.0
48"		100.0
51"		100.0
54"		100.0
57"		100.0
60"		100.0
63"		100.0
66"		100.0
69"		100.0
72"		100.0

GLASS DESIGN LOAD CAPACITY - PSF		
NOMINAL DIMS		9/16" LAM. GLASS
D.L.O. WIDTH	D.L.O. HEIGHT	EXT. (+) INT. (-)
36"	96"	160.0
39"		160.0
42"		100.0
45"		100.0
48"		100.0
51"		100.0
54"		100.0
57"		100.0
60"		100.0
63"		100.0
66"		100.0
69"		100.0
36"	102"	160.0
39"		100.0
42"		100.0
45"		100.0
48"		100.0
51"		100.0
54"		100.0
57"		100.0
60"		100.0
63"		100.0
36"	108"	160.0
39"		100.0
42"		100.0
45"		100.0
48"		100.0
51"		100.0
54"		100.0
57"		100.0
60"		100.0

GLASS DESIGN LOAD CAPACITY - PSF		
NOMINAL DIMS		9/16" LAM. GLASS
D.L.O. WIDTH	D.L.O. HEIGHT	EXT. (+) INT. (-)
36"	114"	100.0
39"		100.0
42"		100.0
45"		100.0
48"		100.0
51"		100.0
54"		100.0
57"		97.9
36"	120"	100.0
39"		100.0
42"		100.0
45"		100.0
48"		100.0
51"		100.0
54"		100.0
36"	126"	100.0
39"		100.0
42"		100.0
45"		100.0
48"		100.0
51"		100.0
36"	132"	100.0
39"		100.0
42"		100.0
45"		100.0
48"		100.0
44-1/2"	87"	160.0
56-1/2"	118"	100.0

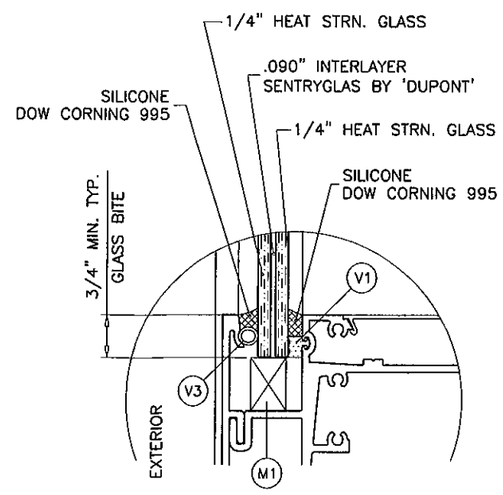

GLAZING DETAIL
9/16" OVERALL LAM. GLASS

PRODUCT REVISED
as complying with the Florida
Building Code
Acceptance No 12-0330.07
Expiration Date 03/18/2014
By
Miami Dade Product Control

Engr: JAVAD AHMAD
CIVIL
FLA. PE # 70592
C.A.N. 3538

MAR 09 2012

NOTE:
GLASS CAPACITIES ON THIS SHEET ARE
BASED ON ASTM E1300-04 (3 SEC. GUSTS).

AL-FAROOQ CORPORATION
ENGINEERS & PRODUCT DEVELOPMENT
1235 S.W. 87 AVE
MIAMI, FLORIDA 33174
TEL (305) 264-8100 FAX. (305) 262-6978
COMP-ANL\W08-89RC

FX3580 ALUM. WINDOW WALL SYSTEM (L.M.I.)

R.C. ALUMINUM INDUSTRIES INC.
2805 N.W. 75 TH AVE.
MIAMI, FL. 33122
TEL. (305) 592-1515 FAX. (305) 592-2184

revisions:			
no	date	by	description
A	03.05.12		UPDATED TO 2010 FBC

date: 11-03-08
scale: 3/8" = 1"
dr. by: HAMID
chk. by:

drawing no.
W08-89

MULLION/JAMB DESIGN LOAD CAPACITY - PSF			
NOMINAL DIMS.		JAMB MULLION	
WIDTH (W)	FRAME HEIGHT	EXT.(+)	INT.(-)
30"	102"	160.0	160.0
36"		160.0	160.0
42"		160.0	160.0
45"		160.0	160.0
48"		160.0	160.0
54"		160.0	160.0
60"		160.0	160.0
66"		160.0	160.0
72"		160.0	160.0
78"		160.0	160.0
84"		100.0	100.0
30"	108"	160.0	160.0
36"		160.0	160.0
42"		160.0	160.0
45"		160.0	160.0
48"		160.0	160.0
54"		160.0	160.0
60"		160.0	160.0
66"		160.0	160.0
72"		160.0	160.0
78"		100.0	100.0
84"		100.0	100.0
30"	114"	160.0	160.0
36"		160.0	160.0
42"		160.0	160.0
45"		160.0	160.0
48"		160.0	160.0
54"		160.0	160.0
60"		160.0	160.0
66"		160.0	160.0
72"		160.0	160.0
78"		100.0	100.0
84"		100.0	100.0
30"	120"	160.0	160.0
36"		160.0	160.0
42"		160.0	160.0
45"		160.0	160.0
48"		160.0	160.0
54"		160.0	160.0
60"		160.0	160.0
66"		160.0	160.0
72"		100.0	100.0
78"		100.0	100.0
84"		100.0	100.0

MULLION/JAMB DESIGN LOAD CAPACITY - PSF			
NOMINAL DIMS.		JAMB MULLION	
WIDTH (W)	FRAME HEIGHT	EXT.(+)	INT.(-)
30"	126"	160.0	160.0
36"		160.0	160.0
42"		160.0	160.0
45"		160.0	160.0
48"		160.0	160.0
54"		160.0	160.0
60"		160.0	160.0
66"		100.0	100.0
72"		100.0	100.0
78"		100.0	100.0
84"		100.0	100.0
30"	132"	160.0	160.0
36"		160.0	160.0
42"		160.0	160.0
45"		160.0	160.0
48"		160.0	160.0
54"		160.0	160.0
60"		160.0	160.0
66"		100.0	100.0
72"		100.0	100.0
78"		100.0	100.0
30"	138"	160.0	160.0
36"		160.0	160.0
42"		160.0	160.0
45"		160.0	160.0
48"		160.0	160.0
54"		160.0	160.0
60"		100.0	100.0
66"		100.0	100.0
72"		100.0	100.0
30"	144"	160.0	160.0
36"		160.0	160.0
42"		160.0	160.0
45"		160.0	160.0
48"		160.0	160.0
54"		160.0	160.0
60"		100.0	100.0
66"		100.0	100.0
72"		100.0	100.0

MULLION/JAMB DESIGN LOAD CAPACITY - PSF			
NOMINAL DIMS.		JAMB MULLION	
WIDTH (W)	FRAME HEIGHT	EXT.(+)	INT.(-)
30"	150"	160.0	160.0
36"		160.0	160.0
42"		160.0	160.0
45"		160.0	160.0
48"		160.0	160.0
54"		160.0	160.0
60"		100.0	100.0
66"		100.0	100.0
30"	156"	160.0	160.0
36"		160.0	160.0
42"		160.0	160.0
45"		160.0	160.0
48"		160.0	160.0
54"		100.0	100.0
60"		100.0	100.0
66"		100.0	100.0
30"	162"	160.0	160.0
36"		160.0	160.0
42"		160.0	160.0
45"		160.0	160.0
48"		160.0	160.0
54"		100.0	100.0
60"		100.0	100.0
30"	168"	160.0	160.0
36"		160.0	160.0
42"		160.0	160.0
45"		160.0	160.0
48"		160.0	160.0
54"		100.0	100.0
60"		100.0	100.0
30"	174"	100.0	100.0
36"		100.0	100.0
42"		100.0	100.0
45"		100.0	100.0
48"		100.0	100.0
54"		100.0	100.0
60"		100.0	100.0

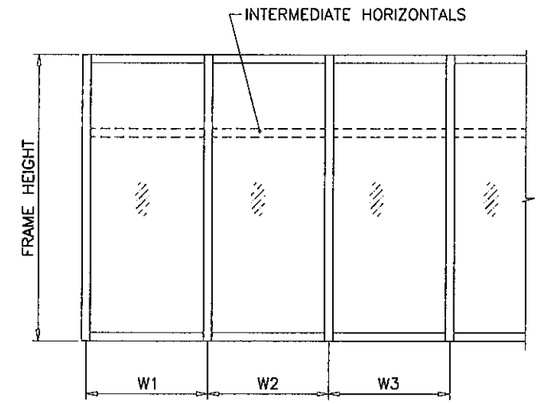

WIDTH (W) = W1
AT FRAME JAMB

WIDTH (W) = $\frac{W2 + W3}{2}$
AT FRAME MULLION

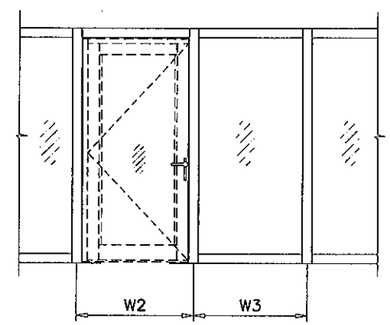

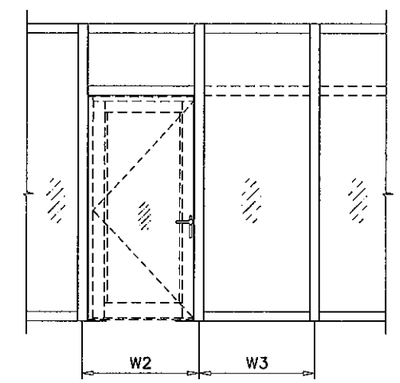

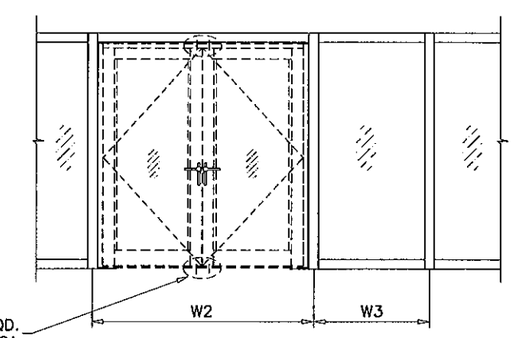

ANCHORS REQD.
SEE DOOR NOA

WIDTH (W) = $\frac{W2 + W3}{2}$
AT FRAME MULLION

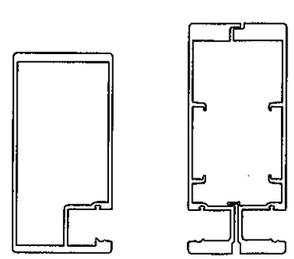

JAMB MULLION

PRODUCT REVISED
as complying with the Florida
Building Code
Acceptance No 12-0330.07
Expiration Date 03/18/2014
By
Miami Dade Product Control

Engr: JAVAD AHMAD
CIVIL
FLA. PE # 70592
C.A.N. 3538

MAR 09 2012

AL-FAROOQ CORPORATION
ENGINEERS & PRODUCT DEVELOPMENT
1235 S.W. 87 AVE
MIAMI, FLORIDA 33174
TEL (305) 264-8100 FAX. (305) 262-6978

COMP-ANL\W08-89RC

FX3580 ALUM. WINDOW WALL SYSTEM (L.M.I.)

R.C. ALUMINUM INDUSTRIES INC.
2805 N.W. 75 TH AVE.
MIAMI, FL. 33122
TEL. (305) 592-1515 FAX. (305) 592-2184

revisions:

no.	date	by	description
A	03.05.12		NO CHANGE THIS SHEET

date: 11-03-08
scale: 3/8" = 1"
dr. by: HAMID
chk. by:

drawing no.
W08-89

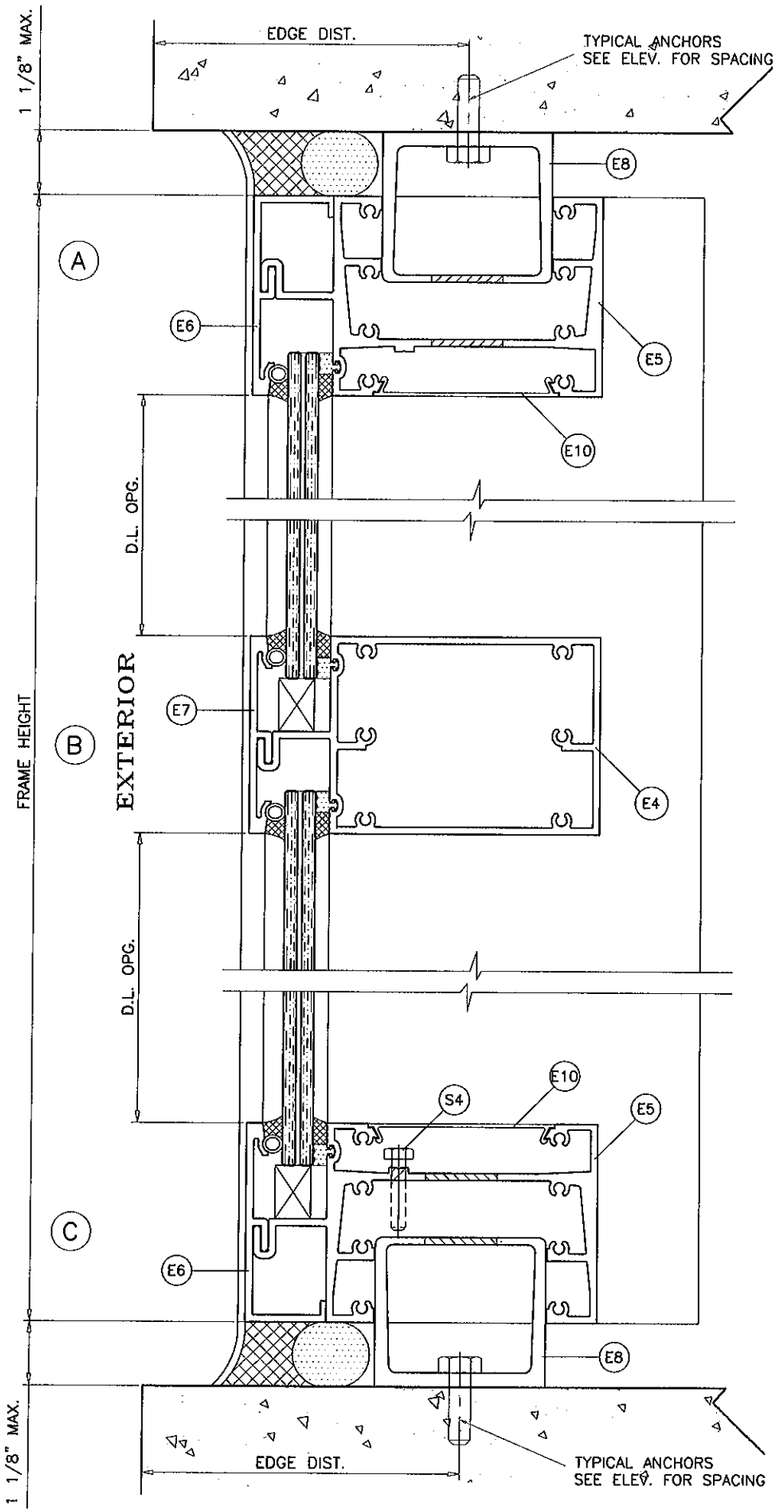

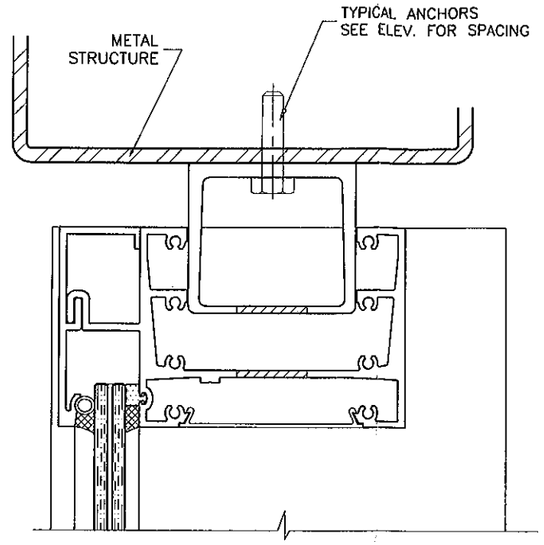

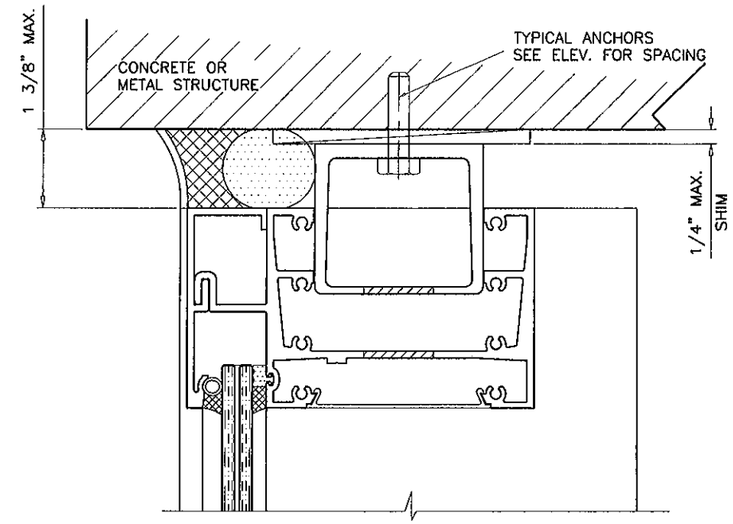

TYPICAL ANCHORS: SEE ELEV. FOR SPACING

1/4" HILTI KWIK-CON II (Fu=163 KSI, Fy=157 KSI)

DIRECTLY INTO CONCRETE (4000 PSI MIN)
1-5/8" MIN. EMBED INTO CONCRETE

1/4" HILTI KWIK-FLEX SELF DRILLING SCREWS (Fu=92 KSI, Fy=120 KSI)
INTO METAL STRUCTURES

STEEL : 12 GA. MIN. (Fy = 36 KSI MIN.)
ALUMINUM : 1/8" THK. MIN. (6063-T6 MIN.)
(STEEL IN CONTACT WITH ALUMINUM TO BE PLATED OR PAINTED)

ANCHOR EDGE DISTANCES

INTO CONCRETE = 2-1/2" MIN.
INTO METAL STRUCTURE = 3/4" MIN.

SEALANTS:

ALL FRAME CORNERS AND MULLION SEAMS SEALED WITH SILICONE.

PRODUCT REVISED
as complying with the Florida
Building Code
Acceptance No 12-0330.07
Expiration Date 03/18/2014
By
Miami Dade Product Control

METAL STRUCTURES NOT BY RC ALUMINUM
MUST SUPPORT LOADS IMPOSED BY GLAZING SYSTEM AND TRANSFER THEM TO THE BUILDING STRUCTURE.

Engr: JAVAD AHMAD
CIVIL
FLA. PE # 70592
C.A.N. 3538

MAR 09 2012

AL-FAROOQ CORPORATION
ENGINEERS & PRODUCT DEVELOPMENT
1235 S.W. 87 AVE
MIAMI, FLORIDA 33174
TEL. (305) 264-8100 FAX. (305) 262-6978
COMP-ANL\W08-89RC

FX3580 ALUM. WINDOW WALL SYSTEM (L.M.I.)

R.C. ALUMINUM INDUSTRIES INC.
2805 N.W. 75 TH AVE.
MIAMI, FL. 33122
TEL. (305) 592-1515 FAX. (305) 592-2184

revisions:

no	date	by	description
A	03.05.12		NO CHANGE THIS SHEET

date: 11-03-08
scale: 3/8" = 1"
dr. by: HAMID
chk. by:

drawing no.
W08-89

ITEM NO.	PART NUMBER	QUANTITY	DESCRIPTION	MATERIAL	MANF./SUPPLIER/REMARKS
E1	FX3580-001	AS REQD.	FEMALE MULLION	6005-T5	–
E2	FX3580-002	AS REQD.	MALE MULLION	6005-T5	–
E3	FX3580-003	AS REQD.	FRAME JAMB	6063-T6	–
E4	FX3580-004	AS REQD.	INTERMEDIATE HORIZONTAL	6063-T6	–
E5	FX3580-005	AS REQD.	FRAME HEAD/SILL	6063-T6	–
E6	FX3580-006	AS REQD.	GLAZING RETAINER (HEAD/SILL)	6063-T6	–
E7	FX3580-007	AS REQD.	GLAZING RETAINER (HORIZONTAL)	6063-T6	–
E8	–	AS REQD.	ANCHOR TUBE	6063-T6	10-5/8" LONG
E9	FX3580-009	AS REQD.	VERTICAL SNAP COVER	6063-T6	–
E10	HP3060-011	AS REQD.	SNAP COVER	6063-T6	–
–	–	–	–	–	–
V1	V-038	AS REQD.	GLAZING GASKET	VINYL	WIBORG
V3	–	–	1/2" BACKER ROD	–	–
–	–	–	–	–	–
S2	–	AS REQD.	FRAME ASSEMBLY SCREWS	–	#12 X 1-1/4" PH SMS ST/ST
S4	–	2/ TUBE	LEVELING SCREWS	–	1/4-20 X 1-1/4" HH MS ST/ST
–	–	–	–	–	–
M1	–	2/ LITE	SETTING BLOCK (5/8" X 7/8" X 4" LONG)	NEOPRENE	LOWE
–	–	–	–	–	–

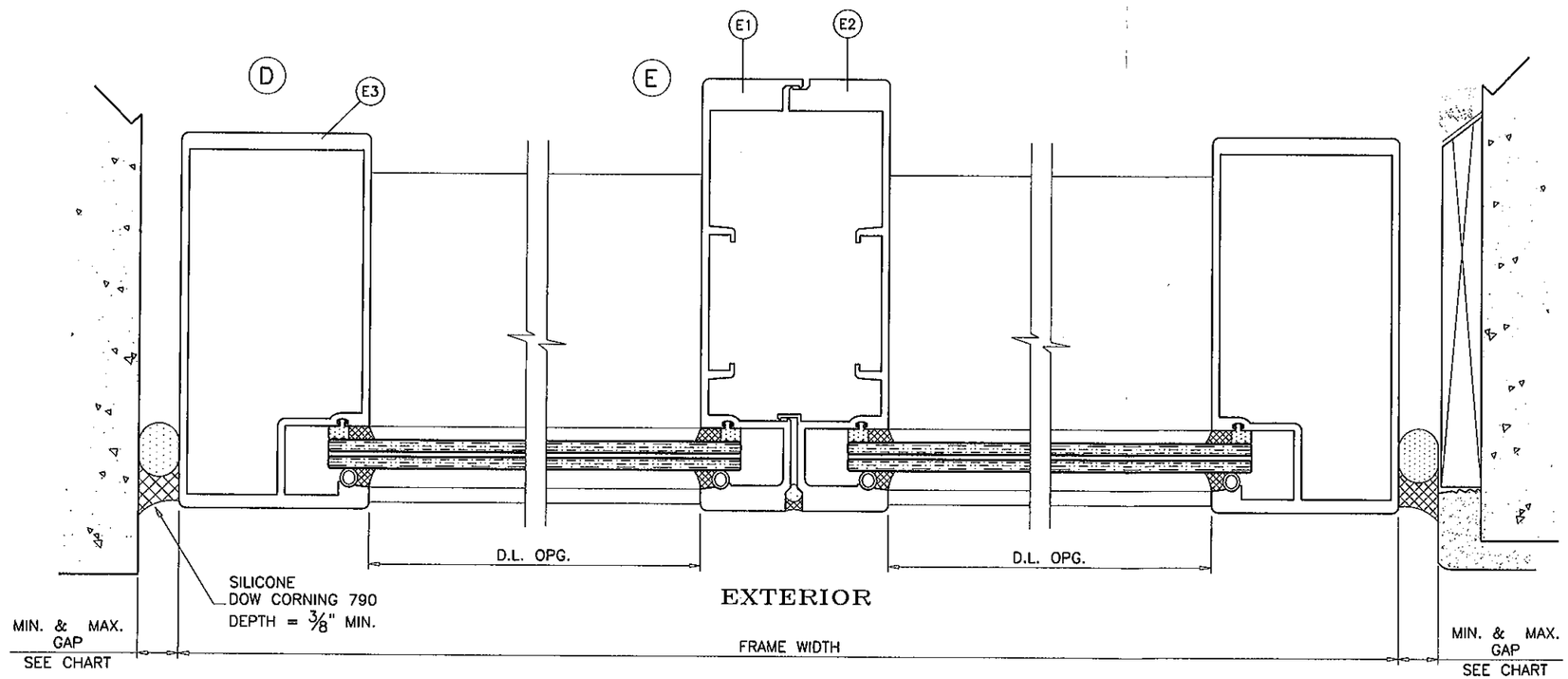

MAX. FRAME HEIGHT	GAP	
	MIN.	MAX.
UPTO 120"	3/8"	3/4"
156"	1/2"	3/4"
174"	5/8"	3/4"

PRODUCT REVISED
as complying with the Florida
Building Code
Acceptance No 12-0330.07
Expiration Date 03/18/2014
By
Miami Dade Product Control

Engr: JAVAD AHMAD
CIVIL
FLA. PE # 70592
C.A.N. 3538

MAR 09 2012

AL-FAROOQ CORPORATION
ENGINEERS & PRODUCT DEVELOPMENT
1235 S.W. 87 AVE
MIAMI, FLORIDA 33174
TEL (305) 264-8100 FAX. (305) 262-6978

COMP-ANL\W08-89RC

FX3580 ALUM. WINDOW WALL SYSTEM (L.M.I.)

R.C. ALUMINUM INDUSTRIES INC.
2805 N.W. 75 TH AVE.
MIAMI, FL. 33122
TEL. (305) 592-1515 FAX. (305) 592-2184

revisions:

no	date	by	description
A	03.05.12		NO CHANGE THIS SHEET

date: 11-03-08
scale: 3/8" = 1"
dr. by: HAMID
chk. by:

drawing no.
W08-89

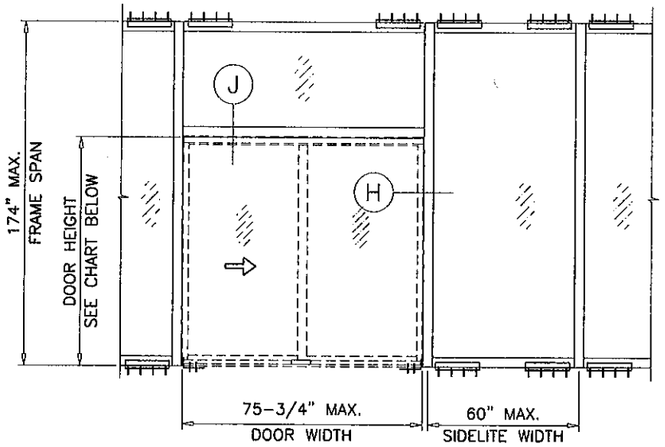

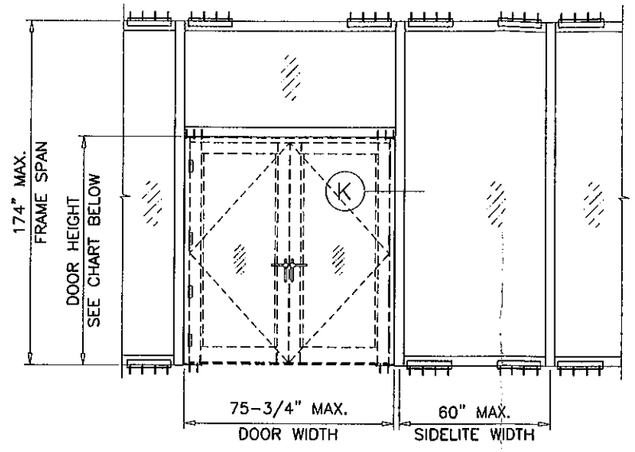

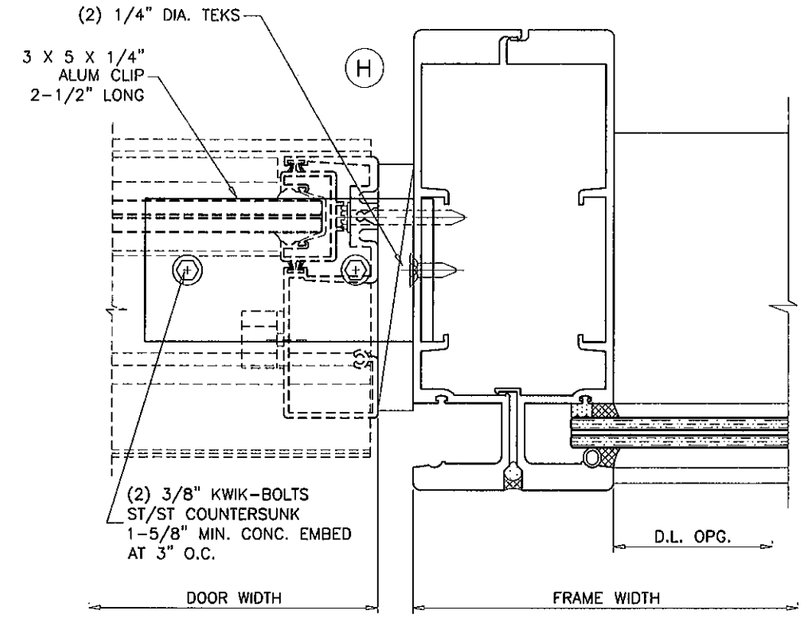

MAX. DESIGN LOAD RATING	
DOOR HEIGHT	EXT. (+) INT. (-)
84"	90.0
96"	91.0
108"	94.0
121-3/4"	100.0

SEE SEPARATE NOA FOR DESIGN LOAD CAPACITY OF DOORS AND DOOR ANCHORS.
LOWER VALUES FROM DOORS NOA OR WINDOW WALL SYSTEM CAPACITY CHARTS WILL APPLY TO ENTIRE SYSTEM.

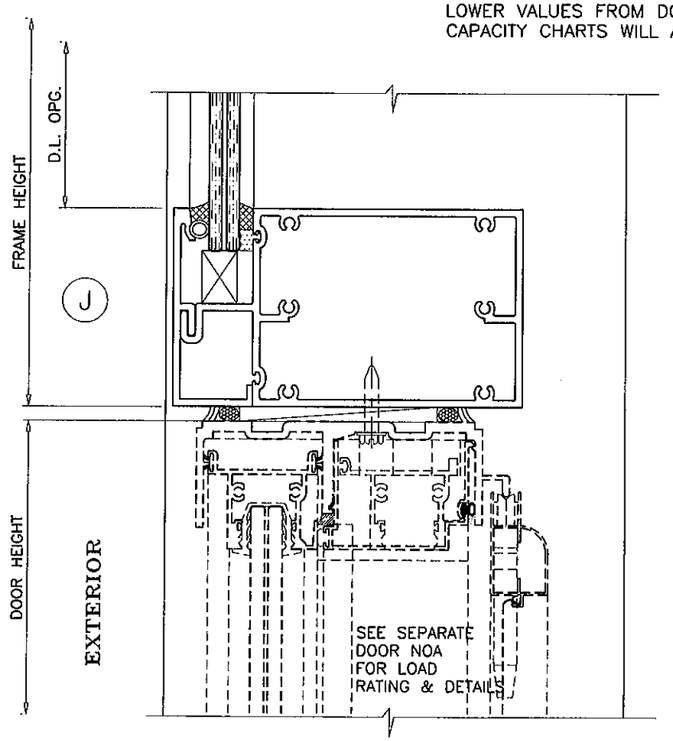

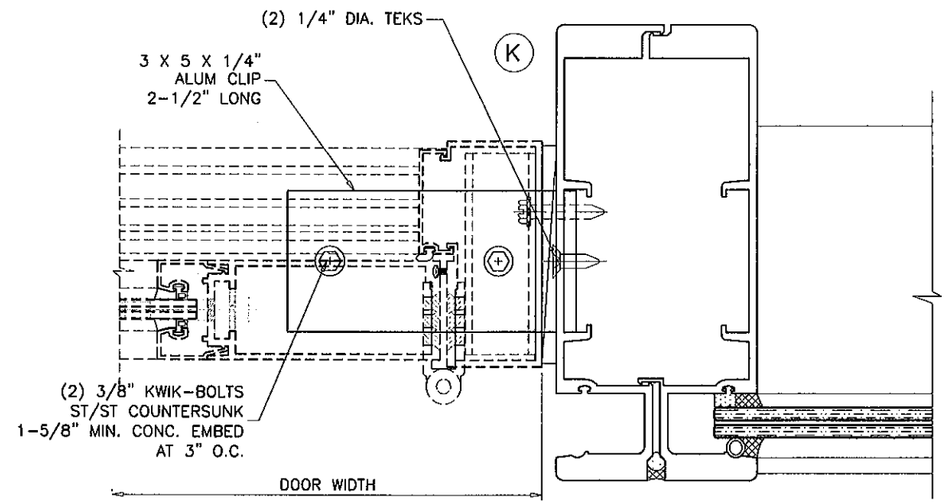

DOOR MULLION INSTALLATION AT SILL

PRODUCT REVISED
as complying with the Florida
Building Code 12-0330.07
Acceptance No
Expiration Date 03/18/2014
By
Miami Dade Product Control

Engr: JAVAD AHMAD
CIVIL
FLA. PE # 70592
C.A.N. 3538

MAR 09 2012

AL-FAROOQ CORPORATION
ENGINEERS & PRODUCT DEVELOPMENT
1235 S.W. 87 AVE
MIAMI, FLORIDA 33174
TEL. (305) 264-8100 FAX. (305) 262-6978
COMP-ANL\W08-89RC

FX3580 ALUM. WINDOW WALL SYSTEM (L.M.I.)

R.C. ALUMINUM INDUSTRIES INC.
2805 N.W. 75 TH AVE.
MIAMI, FL. 33122
TEL. (305) 592-1515 FAX. (305) 592-2184

revisions:

no	date	by	description
A	03.05.12		NO CHANGE THIS SHEET

date: 11-03-08
scale: 3/8" = 1"
dr. by: HAMID
chk. by:

drawing no.
W08-89

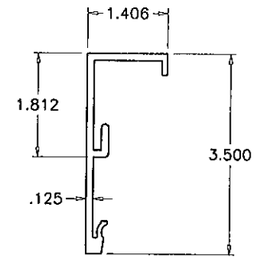

E6 GLAZING RETAINER HEAD/SILL

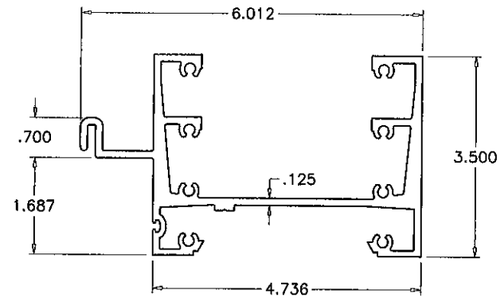

E5 FRAME HEAD/SILL

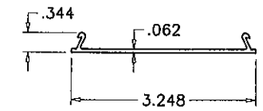

E10 COVER HEAD/SILL

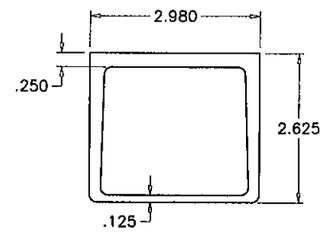

E8 ANCHOR TUBE

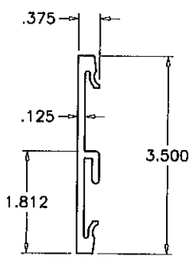

E7 GLAZING RETAINER HORIZONTAL

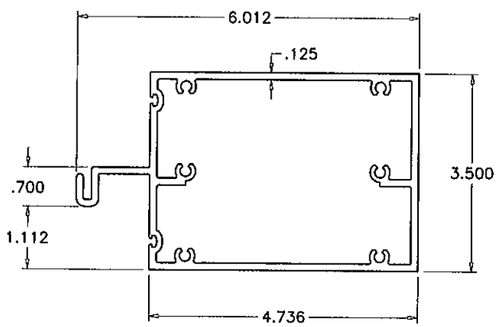

E4 HORIZONTAL

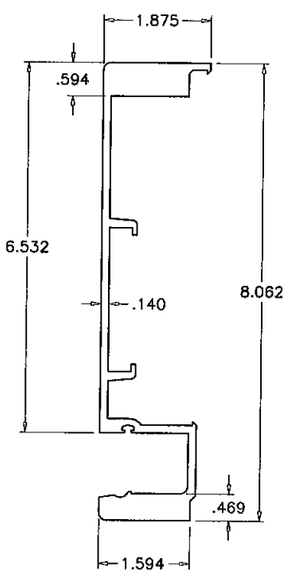

E1 FEMALE MULLION

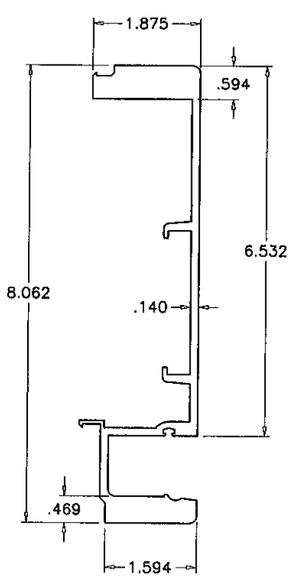

E2 MALE MULLION

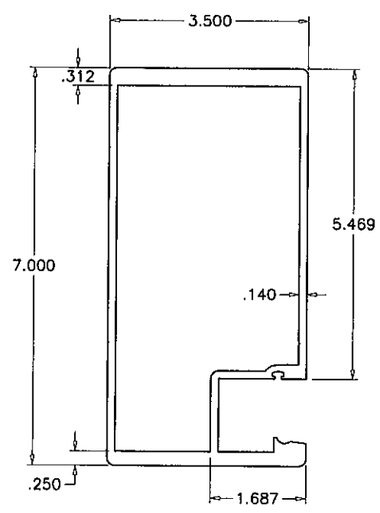

E3 FRAME JAMB

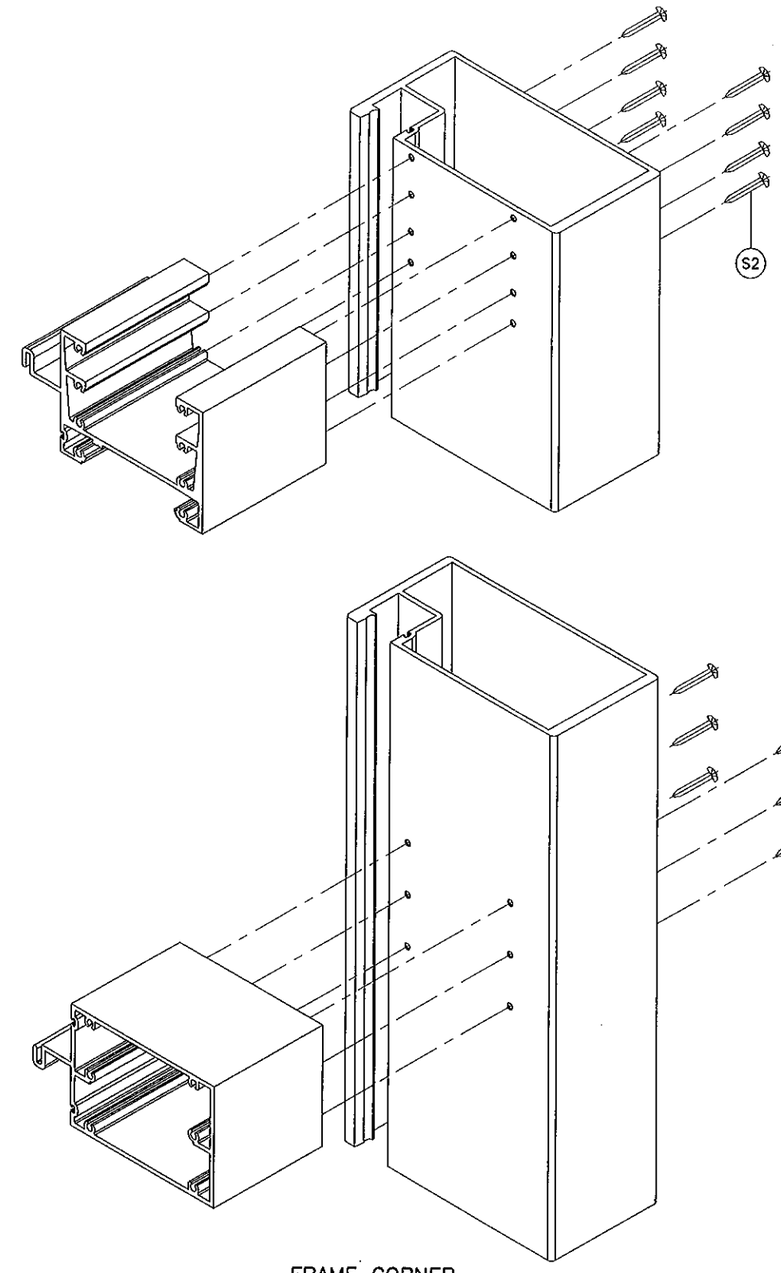

FRAME CORNER

PRODUCT REVISED
as complying with the Florida
Building Code
Acceptance No 12-1230.07
Expiration Date 03/18/2014
By
Miami Dade Product Control

Engr: JAVAD AHMAD
CIVIL
FLA. PE # 70592
C.A.N. 3538

MAR 09 2012

AL-FAROOQ CORPORATION
ENGINEERS & PRODUCT DEVELOPMENT
1235 S.W. 87 AVE
MIAMI, FLORIDA 33174
TEL. (305) 264-8100 FAX. (305) 262-6978

COMP-ANL\W08-89RC

FX3580 ALUM. WINDOW WALL SYSTEM (L.M.I.)

R.C. ALUMINUM INDUSTRIES INC.
2805 N.W. 75 TH AVE.
MIAMI, FL. 33122
TEL. (305) 592-1515 FAX. (305) 592-2184

revisions:

no	date	by	description
A	03.05.12		NO CHANGE THIS SHEET

date: 11-03-08
scale: 3/8" = 1"
dr. by: HAMID
chk. by:

drawing no.
W08-89