MIAMI-DADE COUNTY
DEPARTMENT OF PERMITTING, ENVIRONMENT, AND REGULATORY AFFAIRS (PERA)
BOARD AND CODE ADMINISTRATION DIVISION

MIAMI–DADE COUNTY, FLORIDA
PRODUCT CONTROL SECTION
11805 SW 26 Street, Room 208
Miami, Florida 33175–2474
T (786) 315–2590 F (786) 315–2599
www.miamidade.gov/pera/

NOTICE OF ACCEPTANCE (NOA)

R. C. Aluminum Industries, Inc.
2805 NW 75th Ave
Miami, FL 33122

SCOPE:

This NOA is being issued under the applicable rules and regulations governing the use of construction materials. The documentation submitted has been reviewed and accepted by Miami–Dade County PERA–Product Control Section to be used in Miami–Dade County and other areas where allowed by the Authority Having Jurisdiction (AHJ).

This NOA shall not be valid after the expiration date stated below. The Miami–Dade County Product Control Section (In Miami–Dade County) and/or the AHJ (in areas other than Miami–Dade County) reserve the right to have this product or material tested for quality assurance purposes. If this product or material fails to perform in the accepted manner, the manufacturer will incur the expense of such testing and the AHJ may immediately revoke, modify, or suspend the use of such product or material within their jurisdiction. PERA reserves the right to revoke this acceptance, if it is determined by Miami–Dade County Product Control Section that this product or material fails to meet the requirements of the applicable building code.

This product is approved as described herein, and has been designed to comply with the Florida Building Code, including the High Velocity Hurricane Zone.

DESCRIPTION: Series "HP–3060" Aluminum Window Wall System – L.M.I.

APPROVAL DOCUMENT: Drawing No. **W03–108**, titled "Series HP3060 Alum. Window Wall System (L.M.I.)", sheets 1 through 09 of 09, dated 12/01/03, prepared by AL–Farooq Corporation, with latest revised **"D"** dated 03/08/12, signed and sealed by Javad Ahmad, P. E., bearing the Miami–Dade County Product Control Revision stamp with the Notice of Acceptance number and Expiration date by the Miami–Dade County Product Control Section.

MISSILE IMPACT RATING: Large and Small Missile Impact Resistant.

LABELING: Each unit shall bear a permanent label with the manufacturer's name or logo, city, state, series and following statement: "Miami–Dade County Product Control Approved" unless otherwise noted herein.

RENEWAL of this NOA shall be considered after a renewal application has been filed and there has been no change in the applicable building code negatively affecting the performance of this product.

TERMINATION of this NOA will occur after the expiration date or if there has been a revision or change in the materials, use, and/ or manufacture of the product or process. Misuse of this NOA as an endorsement of any product, for sales, advertising or any other purposes shall automatically terminate this NOA. Failure to comply with any section of this NOA shall be cause for termination and removal of NOA.

ADVERTISEMENT: The NOA number preceded by the words Miami–Dade County, Florida, and followed by the expiration date may be displayed in advertising literature. If any portion of the NOA is displayed, then it shall be done in its entirety.

INSPECTION: A copy of this entire NOA shall be provided to the user by the manufacturer or its distributors and shall be available for inspection at the job site at the request of the Building Official.

This NOA **revises NOA No. 09–0324.01** and consists of this page 1, evidence pages E–1 and E–2, as well as approval document mentioned above.

The submitted documentation was reviewed by **Jaime D. Gascon, P. E.**

MIAMI-DADE COUNTY APPROVED

J. Gascon 6/13/12

R.C. Aluminum Industries, Inc.

NOTICE OF ACCEPTANCE: EVIDENCE SUBMITTED

A. DRAWINGS

1. Manufacturer's die drawings and sections.
   (Submitted under previous NOA's No.'s 03–1224.04, 05–0815.04 and 09–0324.01)
2. Drawing No. **W03–108**, titled "Series HP3060 Alum. Window Wall System (L.M.I.)", sheets 1 through 09 of 09, dated 12/01/03, prepared by AL–Farooq Corporation, with latest revised "**D**" dated 03/08/12, signed and sealed by Javad Ahmad, P. E.

B. TESTS

1. Test reports on: 1) Air Infiltration Test, per FBC, TAS 202–94
   2) Uniform Static Air Pressure Test, Loading per FBC TAS 202–94
   3) Water Resistance Test, per FBC, TAS 202–94
   4) Large Missile Impact Test per FBC, TAS 201–94
   5) Cyclic Wind Pressure Loading per FBC, TAS 203–94
   6) Impact Test per FBC, ANSI Z97.1 Standard for Safety Glazing Materials Used in Buildings / CPSC 16 CFR 1201 Safety Standard for Architectural Glazing Materials
   7) Forced Entry Test, Type "D–A" fixed window, Grade 10, Level LV 1 per ASTM F 588 and per FBC 2411 3.2.1, TAS 202–94

   along with marked–up drawings and installation diagram of an aluminum window wall, prepared by Fenestration Testing Laboratory, Inc., Test Reports No.'s:
   I. **FTL–5739** dated 11/14/08, signed and sealed by Carlos S. Rionda, P. E.
   (Submitted under previous NOA No. 09–0128.16)
   II. **FTL–2993,** dated 03/19/01, signed and sealed by Luis Antonio Figueredo, P. E.
   (Submitted under previous NOA No. 03–1224.04)
   III. **FTL–2618, FTL–2356** and **FTL–2172**, dated 08/23/00, 07/19/99 and 11/16/98, all signed and sealed by Edmundo J. Largaespada, P. E.
   (Submitted under previous NOA No. 03–1224.04)

C. CALCULATIONS

1. Anchor verification calculations and structural analysis, complying with FBC, prepared by AL–Farooq Corporation, dated 02/09/09, signed and sealed by Dr. Humayoun Farooq, P. E.
   (Submitted under previous NOA No. 09–0324.01)
2. **Glazing complies with ASTM E 1300–04**

D. QUALITY ASSURANCE

1. Miami–Dade Department of Permitting, Environment, and Regulatory Affairs (PERA).

Jaime D. Gascon, P. E.
Product Control Section Supervisor
NOA No. 12–0330.09
Expiration Date: April 01, 2014
Approval Date: June 21, 2012

NOTICE OF ACCEPTANCE: EVIDENCE SUBMITTED

E. MATERIAL CERTIFICATIONS

1. Notice of Acceptance No. **11–0624.02** issued to E.I. DuPont DeNemours & Co., Inc. for their "**DuPont Sentry Glass® Interlayer**" dated 05/26/2010, expiring on 01/14/17.
2. Notice of Acceptance No. **10–0201.01**issued to Viracon, Inc. for their "**Viracon HRG–2 Glass Interlayer**", dated 03/24/10, expiring on 02/12/15.

F. STATEMENTS

1. Statement letter of no financial interest, conformance and compliance with the **FBC–2010**, dated 02/27/12, signed and sealed by Javad Ahmad, P. E.
2. Proposal issued by Product Control, dated 10/28/08, signed by Jaime D. Gascon, P. E. ***(Submitted under NOA No. 09–0324.01)***
3. Laboratory compliance letters prepared by Fenestration Testing Laboratory, Inc., for Test Reports No.'s:
   - **I. FTL–5739** dated 11/14/08, signed and sealed by Carlos S. Rionda, P. E. ***(Submitted under previous NOA No. 09–0324.01)***
   - **II. FTL–2993,** dated 03/19/01, signed and sealed by Luis Antonio Figueredo, P. E. ***(Submitted under previous NOA No. 03–1224.04***
   - **III. FTL–2618**, **FTL–2356** and **FTL–2172**, dated 08/23/00, 07/19/99 and 11/16/98, all signed and sealed by Edmundo J. Largaespada, P. E. ***(Submitted under previous NOA No. 03–1224.04)***

G. OTHERS

1. Notice of Acceptance No. **09–0324.01**, issued to R. C. Aluminum Industries, Inc., for their Series "**HP–3060 Aluminum Window Wall System – L.M.I.**", approved on 05/27/09 and expiring on 04/01/14.

Jaime D. Gascon, P. E.
Product Control Section Supervisor
NOA No. 12–0330.09
Expiration Date: April 01, 2014
Approval Date: June 21, 2012

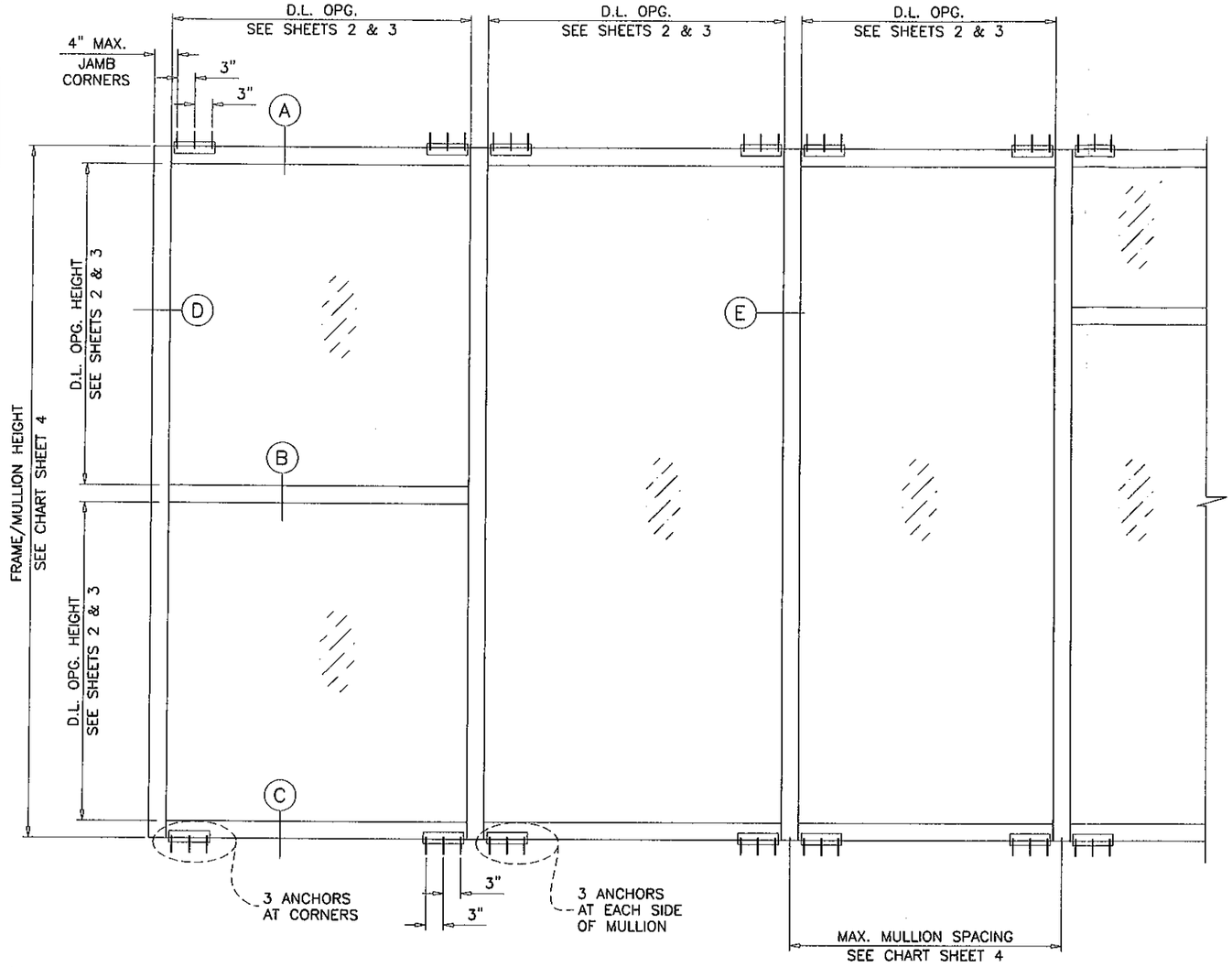

TYPICAL ELEVATIONS

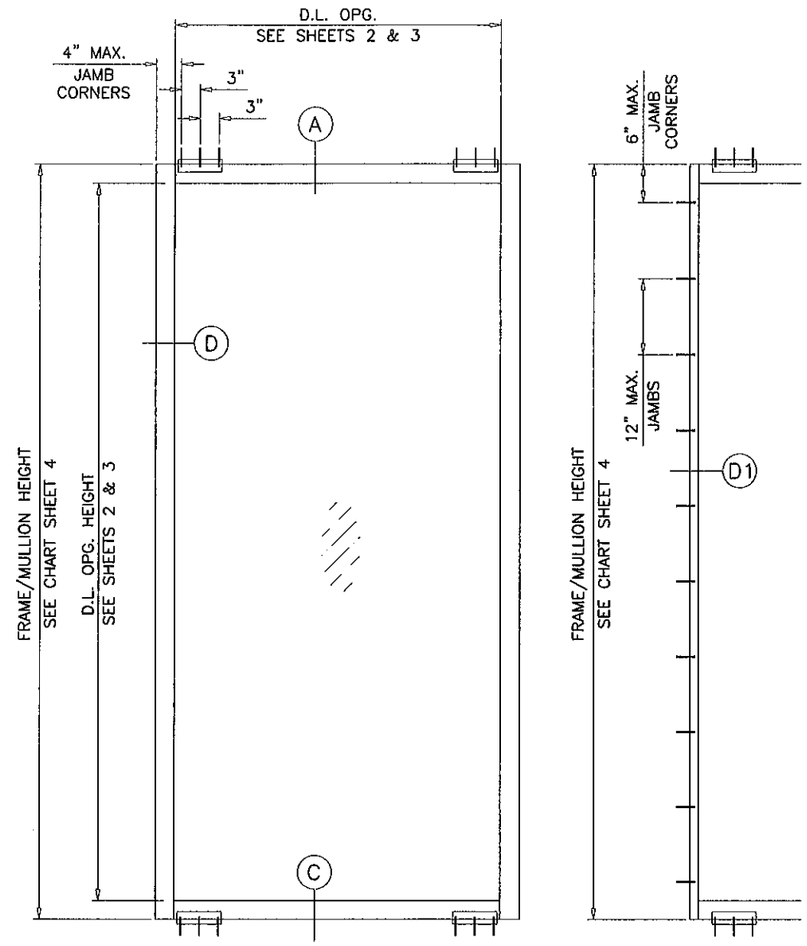

ANCHORED JAMB OPTION

PRODUCT REVISED
as complying with the Florida
Building Code
Acceptance No 12-0330.09
Expiration Date 04/01/2014
By
Miami Dade Product Control

DAYLITE OPENINGS:
D.L.O. HEIGHT = FRAME HEIGHT – 6"
D.L.O. WIDTH = FRAME WIDTH – 6"

HP3060 ALUM. WINDOW WALL SYSTEM (L.M.I.)

THIS SYSTEM IS RATED FOR LARGE MISSILE IMPACT.
SHUTTERS ARE NOT REQUIRED.

CODE REQUIREMENTS FOR SAFEGUARDS MUST BE OBSERVED.

THIS PRODUCT HAS BEEN DESIGNED AND TESTED TO COMPLY WITH THE REQUIREMENTS OF THE FLORIDA BUILDING CODE INCLUDING HIGH VELOCITY HURRICANE ZONE (HVHZ).

ANCHORS SHALL BE AS LISTED, SPACED AS SHOWN ON DETAILS, ANCHORS EMBEDMENT TO BASE MATERIAL SHALL BE BEYOND WALL DRESSING OR STUCCO.

ANCHORING OR LOADING CONDITIONS NOT SHOWN IN THESE DETAILS ARE NOT PART OF THIS APPROVAL.

MATERIALS INCLUDING BUT NOT LIMITED TO STEEL/METAL SCREWS, THAT COME INTO CONTACT WITH OTHER DISSIMILAR MATERIALS SHALL MEET THE REQUIREMENTS OF THE FLORIDA BLDG. CODE SECTION 2003.8.4.

INSTRUCTIONS:

USE CHARTS AS FOLLOWS.

STEP 1 DETERMINE DESIGN WIND LOAD REQUIREMENT BASED ON WIND VELOCITY, BLDG. HEIGHT, WIND ZONE USING APPLICABLE ASCE 7 STANDARD.

STEP 2 SEE CHARTS ON SHEETS 2 & 3 FOR DESIGN LOAD CAPACITY OF DESIRED GLASS SIZE.

STEP 3 CHECK MULLION AND JAMB CAPACITY FOR A GIVEN SPACING AND HEIGHT USING CHARTS ON SHEETS 4 & 5. THE CAPACITY SHOULD EXCEED THE DESIGN LOAD.

STEP 4 THE LOWEST VALUE RESULTING FROM STEPS 2 AND 3 SHALL APPLY TO ENTIRE SYSTEM.

WINDOW WALL SYSTEM WITH GLASS TYPES 'A', 'A1', 'A2' & 'B' COMPLIES WITH REQUIREMENTS OF ANSI Z97.1.

Engr: JAVAD AHMAD
CIVIL
FLA. PE # 70592
C.A.N. 3538

MAR 12 2012

AL-FAROOQ CORPORATION
ENGINEERS & PRODUCT DEVELOPMENT
1235 S.W. 87 AVE
MIAMI, FLORIDA 33174
TEL. (305) 264-8100 FAX. (305) 262-6978
STORE\W03-108RC

HP3060 ALUM. WINDOW WALL SYSTEM (L.M.I.)

R.C. ALUMINUM INDUSTRIES INC.
2805 N.W. 75 TH AVE.
MIAMI, FL. 33122
TEL. (305) 592-1515 FAX. (305) 592-2184

revisions:

no.	date	by	description
A	05.12.05		NOTES REV.
B	11.11.05		NOTE DELETED
C	02.10.09		UPDATED FOR 2007 FBC
D	03.08.12		UPDATED TO 2010 FBC

date: 12-01-03
scale: 1/2"=1'-0"
dr. by: HAMID
chk. by:

drawing no.
W03-108

GLASS DESIGN LOAD CAPACITY - PSF		
NOMINAL DIMS		GLASS TYPE 'A'
D.L.O. WIDTH	D.L.O. HEIGHT	EXT.(+) & INT.(-)
36"	36"	140.0
39"		140.0
42"		140.0
45"		140.0
48"		140.0
51"		140.0
54"		140.0
57"		140.0
60"		140.0
36"	42"	140.0
39"		140.0
42"		140.0
45"		140.0
48"		140.0
51"		140.0
54"		140.0
36"	48"	140.0
39"		140.0
42"		140.0
45"		140.0
48"		140.0
36"	54"	140.0
39"		140.0
42"		140.0
36"	60"	140.0

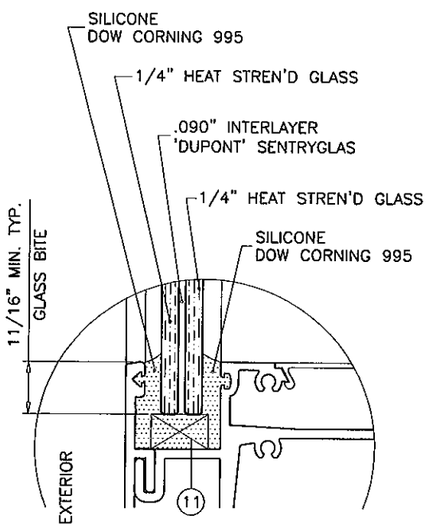

GLASS TYPE 'A'
9/16" OVERALL GLASS

GLASS DESIGN LOAD CAPACITY - PSF		
NOMINAL DIMS		GLASS TYPE 'A1'
D.L.O. WIDTH	D.L.O. HEIGHT	EXT.(+) & INT.(-)
33"	60"	110.0
36"		110.0
39"		110.0
42"		110.0
45"		110.0
48"		110.0
51"		110.0
54"		110.0
57"		110.0
60"		110.0
63"		110.0
66"		110.0
69"		110.0
33"	66"	110.0
36"		110.0
39"		110.0
42"		110.0
45"		110.0
48"		110.0
51"		110.0
54"		110.0
57"		110.0
60"		110.0
63"		110.0
33"	72"	110.0
36"		110.0
39"		110.0
42"		110.0
45"		110.0
48"		110.0
51"		110.0
54"		110.0
57"		110.0
33"	78"	110.0
36"		110.0
39"		110.0
42"		110.0
45"		110.0
48"		110.0
51"		110.0
54"		110.0
33"	84"	110.0
36"		110.0
39"		110.0
42"		110.0
45"		110.0
48"		110.0
33"	90"	110.0
36"		110.0
39"		110.0
42"		110.0
45"		110.0

GLASS DESIGN LOAD CAPACITY - PSF		
NOMINAL DIMS		GLASS TYPE 'A1'
D.L.O. WIDTH	D.L.O. HEIGHT	EXT.(+) & INT.(-)
33"	96"	110.0
36"		110.0
39"		110.0
42"		110.0
33"	102"	110.0
36"		110.0
39"		110.0
33"	108"	110.0
36"		110.0
39"		110.0
33"	114"	110.0
36"		110.0
33"	118"	110.0
36"		110.0
33"	120"	110.0
33"	126"	110.0

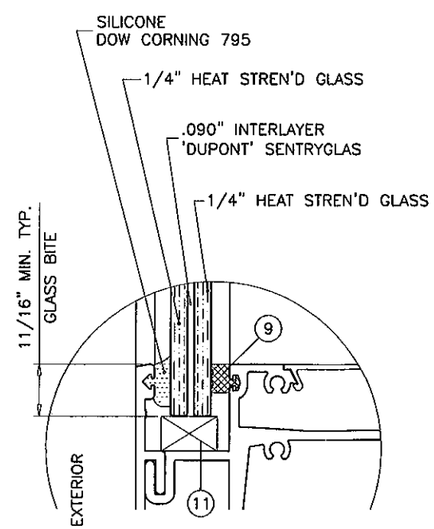

GLASS TYPE 'A1'
9/16" OVERALL GLASS

GLASS DESIGN LOAD CAPACITY - PSF		
NOMINAL DIMS		GLASS TYPE 'A2'
D.L.O. WIDTH	D.L.O. HEIGHT	EXT.(+) & INT.(-)
36"	36"	100.0
39"		100.0
42"		100.0
45"		100.0
48"		100.0
51"		100.0
54"		100.0
57"		100.0
36"	42"	100.0
39"		100.0
42"		100.0
45"		100.0
48"		100.0
51"		100.0
54"		100.0
57"		100.0
36"	48"	100.0
39"		100.0
42"		100.0
45"		100.0
48"		100.0
51"		100.0
54"		100.0
57"		100.0
36"	54"	100.0
39"		100.0
42"		100.0
45"		100.0
48"		100.0
51"		100.0
54"		100.0
57"		100.0
36"	59"	100.0
39"		100.0
42"		100.0
45"		100.0
48"		100.0
51"		100.0
54"		100.0
57"		100.0

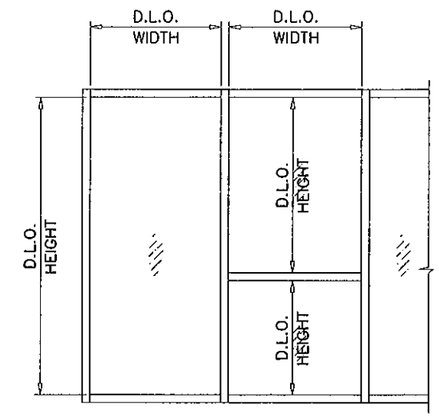

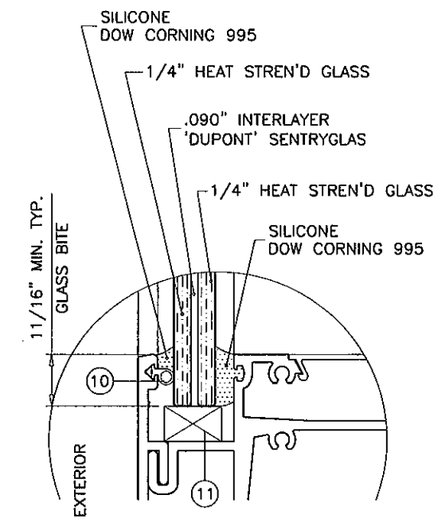

GLASS TYPE 'A2'
9/16" OVERALL GLASS

PRODUCT REVISED
as complying with the Florida Building Code
Acceptance No 12-0330.09
Expiration Date 04/01/2014
By
Miami Dade Product Control

NOTE:
GLASS CAPACITIES ON THIS SHEET ARE BASED ON ASTM E1300-04 (3 SEC. GUSTS) AND MAXIMUM CYCLIC LOAD TESTED.
FOR WIND LOADS BASED ON DIFFERENT WIND DURATION LOADING CRITERIA (WIND TUNNEL TESTS) APPLY FACTORS AS SPECIFIED IN TABLE X6.1 OF E1300-04.
OR CHECK GLASS CAPACITY ON JOB TO JOB BASIS.

Engr: JAVAD AHMAD
CIVIL
FLA. PE # 70592
C.A.N. 3538

MAR 12 2012

AL-FAROOQ CORPORATION
ENGINEERS & PRODUCT DEVELOPMENT
1235 S.W. 87 AVE
MIAMI, FLORIDA 33174
TEL. (305) 264-8100 FAX. (305) 262-6978
STORE\W03-108RC

HP3060 ALUM. WINDOW WALL SYSTEM (L.M.I.)

R.C. ALUMINUM INDUSTRIES INC.
2805 N.W. 75 TH AVE.
MIAMI, FL. 33122
TEL. (305) 592-1515 FAX. (305) 592-2184

revisions:

no	date	by	description
A	05.12.05		NOTE ADDED
B	11.11.05		NO CHANGE THIS SHEET
C	02.10.09		UPDATED FOR 2007 FBC
D	03.08.12		UPDATED TO 2010 FBC

date: 12-01-03
scale: 1/2" = 1"
dr. by: HAMID
chk. by:

drawing no.
W03-108

GLASS DESIGN LOAD CAPACITY - PSF		
NOMINAL DIMS		GLASS TYPE 'B'
D.L.O. WIDTH	D.L.O. HEIGHT	EXT.(+) & INT.(-)
36"	36"	90.0
39"		90.0
42"		90.0
45"		90.0
36"	42"	90.0
39"		90.0
42"		90.0
45"		90.0
36"	48"	90.0
39"		90.0
42"		90.0
45"		90.0
36"	54"	90.0
39"		90.0
42"		90.0
45"		90.0
36"	60"	90.0
39"		90.0
42"		90.0
45"		90.0
36"	66"	90.0
39"		90.0
42"		90.0
45"		90.0
36"	69"	90.0
39"		90.0
42"		90.0
45"		90.0

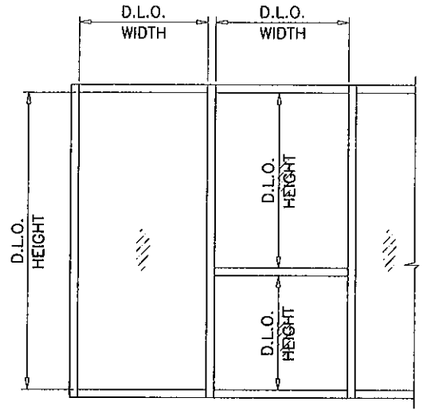

NOTE:
GLASS CAPACITIES ON THIS SHEET ARE BASED ON ASTM E1300-04 (3 SEC. GUSTS) AND MAXIMUM CYCLIC LOAD TESTED.
FOR WIND LOADS BASED ON DIFFERENT WIND DURATION LOADING CRITERIA (WIND TUNNEL TESTS) APPLY FACTORS AS SPECIFIED IN TABLE X6.1 OF E1300-04.
OR CHECK GLASS CAPACITY ON JOB TO JOB BASIS.

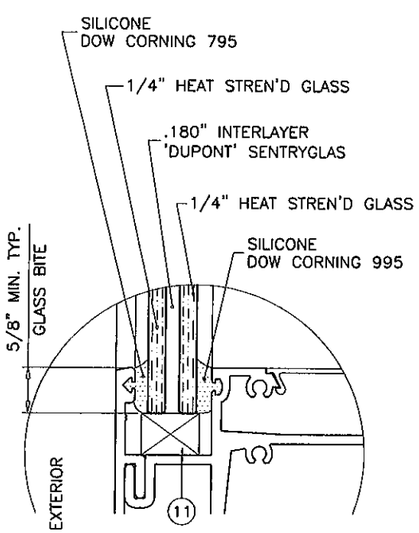

GLASS TYPE 'B'
.630" OVERALL GLASS

GLASS DESIGN LOAD CAPACITY - PSF		
NOMINAL DIMS		GLASS TYPE 'C'
D.L.O. WIDTH	D.L.O. HEIGHT	EXT.(+) & INT.(-)
36"	72"	140.0
39"		140.0
42"		140.0
45"		140.0
48"		140.0
51"		140.0
54"		140.0
57"		140.0
60"		140.0
63"		140.0
66"		140.0
69"		140.0
72"		140.0
36"	78"	140.0
39"		140.0
42"		140.0
45"		140.0
48"		140.0
51"		140.0
54"		140.0
57"		140.0
60"		140.0
63"		140.0
66"		136.0
69"		132.0
72"		129.0
36"	84"	140.0
39"		140.0
42"		140.0
45"		140.0
48"		140.0
51"		140.0
54"		140.0
57"		140.0
60"		136.0
63"		131.0
66"		126.0
69"		123.0
36"	90"	140.0
39"		140.0
42"		140.0
45"		140.0
48"		140.0
51"		140.0
54"		137.0
57"		131.0
60"		126.0
63"		122.0
66"		118.0

GLASS DESIGN LOAD CAPACITY - PSF		
NOMINAL DIMS		GLASS TYPE 'C'
D.L.O. WIDTH	D.L.O. HEIGHT	EXT.(+) & INT.(-)
36"	96"	140.0
39"		140.0
42"		140.0
45"		140.0
48"		140.0
51"		135.0
54"		128.0
57"		123.0
60"		119.0
36"	102"	140.0
39"		140.0
42"		140.0
45"		140.0
48"		134.0
51"		126.0
54"		121.0
57"		116.0
36"	108"	140.0
39"		140.0
42"		140.0
45"		136.0
48"		126.0
51"		120.0
54"		114.0
36"	114"	140.0
39"		140.0
42"		140.0
45"		128.0
48"		120.0
51"		114.0
36"	120"	140.0
39"		140.0
42"		137.0
45"		124.0
48"		116.0

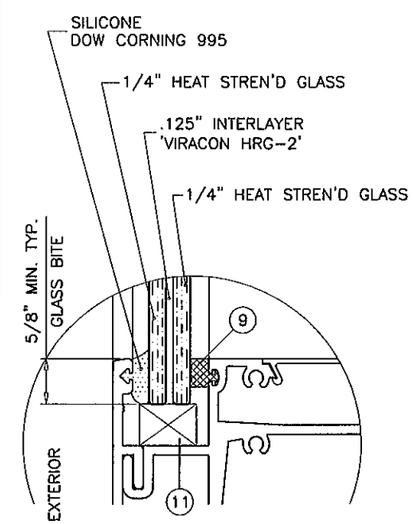

GLASS TYPE 'C'
5/8" OVERALL GLASS

PRODUCT REVISED
as complying with the Florida
Building Code
Acceptance No 12-0330.09
Expiration Date 04/01/2014
By
Miami Dade Product Control

Engr: JAVAD AHMAD
CIVIL
FLA. PE # 70592
C.A.N. 3538

MAR 12 2012

AL-FAROOQ CORPORATION
ENGINEERS & PRODUCT DEVELOPMENT
1235 S.W. 87 AVE
MIAMI, FLORIDA 33174
TEL. (305) 264-8100 FAX. (305) 262-6978

STORE\W03-108RC

HP3060 ALUM. WINDOW WALL SYSTEM (L.M.I.)

R.C. ALUMINUM INDUSTRIES INC.
2805 N.W. 75 TH AVE.
MIAMI, FL. 33122
TEL. (305) 592-1515 FAX. (305) 592-2184

revisions:

no	date	by	description
A	05.12.05		CHART REV.
B	11.11.05		NO CHANGE THIS SHEET
C	02.10.09		UPDATED FOR 2007 FBC
D	03.08.12		UPDATED TO 2010 FBC

date: 12-01-03
scale: 1/2" = 1"
dr. by: HAMID
chk. by:

drawing no.
W03-108

MULLION/JAMB DESIGN LOAD CAPACITY - PSF
WITHOUT INTERMEDIATE HORIZONTALS

NOMINAL DIMS.		JAMB 'J1' MULLION 'M1'		JAMB 'J2' MULLION 'M2'	
WIDTH (W)	FRAME HEIGHT	EXT.(+)	INT.(-)	EXT.(+)	INT.(-)
30"	90"	140.0	140.0	140.0	140.0
33"		140.0	140.0	140.0	140.0
36"		140.0	140.0	140.0	140.0
39"		140.0	140.0	140.0	140.0
42"		140.0	140.0	140.0	140.0
45"		140.0	140.0	140.0	140.0
48"		140.0	140.0	140.0	140.0
51"		140.0	140.0	140.0	140.0
54"		140.0	140.0	140.0	140.0
57"		140.0	140.0	140.0	140.0
60"		140.0	140.0	140.0	140.0
63"		140.0	140.0	140.0	140.0
66"		140.0	140.0	140.0	140.0
69"		140.0	140.0	140.0	140.0
72"		140.0	140.0	140.0	140.0
30"	96"	140.0	140.0	140.0	140.0
33"		140.0	140.0	140.0	140.0
36"		140.0	140.0	140.0	140.0
39"		140.0	140.0	140.0	140.0
42"		140.0	140.0	140.0	140.0
45"		140.0	140.0	140.0	140.0
48"		140.0	140.0	140.0	140.0
51"		140.0	140.0	140.0	140.0
54"		140.0	140.0	140.0	140.0
57"		140.0	140.0	140.0	140.0
60"		140.0	140.0	140.0	140.0
63"		140.0	140.0	140.0	140.0
66"		140.0	140.0	140.0	140.0
69"		140.0	140.0	140.0	140.0
72"		XX	XX	100.0	100.0
30"	102"	140.0	140.0	140.0	140.0
33"		140.0	140.0	140.0	140.0
36"		140.0	140.0	140.0	140.0
39"		140.0	140.0	140.0	140.0
42"		140.0	140.0	140.0	140.0
45"		140.0	140.0	140.0	140.0
48"		140.0	140.0	140.0	140.0
51"		140.0	140.0	140.0	140.0
54"		140.0	140.0	140.0	140.0
57"		140.0	140.0	140.0	140.0
60"		140.0	140.0	140.0	140.0
63"		140.0	140.0	140.0	140.0
66"		140.0	140.0	140.0	140.0
69"		XX	XX	100.0	100.0
72"		XX	XX	100.0	100.0

MULLION/JAMB DESIGN LOAD CAPACITY - PSF
WITHOUT INTERMEDIATE HORIZONTALS

NOMINAL DIMS.		JAMB 'J1' MULLION 'M1'		JAMB 'J2' MULLION 'M2'	
WIDTH (W)	FRAME HEIGHT	EXT.(+)	INT.(-)	EXT.(+)	INT.(-)
30"	108"	140.0	140.0	140.0	140.0
33"		140.0	140.0	140.0	140.0
36"		140.0	140.0	140.0	140.0
39"		140.0	140.0	140.0	140.0
42"		140.0	140.0	140.0	140.0
45"		140.0	140.0	140.0	140.0
48"		140.0	140.0	140.0	140.0
51"		140.0	140.0	140.0	140.0
54"		140.0	140.0	140.0	140.0
57"		140.0	140.0	140.0	140.0
60"		140.0	140.0	140.0	140.0
63"		140.0	140.0	139.6	139.6
66"		XX	XX	100.0	100.0
69"		XX	XX	100.0	100.0
72"		XX	XX	100.0	100.0
30"	114"	140.0	140.0	140.0	140.0
33"		140.0	140.0	140.0	140.0
36"		140.0	140.0	140.0	140.0
39"		140.0	140.0	140.0	140.0
42"		140.0	140.0	140.0	140.0
45"		140.0	140.0	140.0	140.0
48"		140.0	140.0	140.0	140.0
51"		140.0	140.0	140.0	140.0
54"		140.0	140.0	140.0	140.0
57"		140.0	140.0	138.5	138.5
60"		135.3	135.3	131.5	131.5
63"		XX	XX	100.0	100.0
66"		XX	XX	100.0	100.0
69"		XX	XX	100.0	100.0
72"		XX	XX	100.0	100.0
30"	120"	90.0	110.0	100.0	110.0
33"		90.0	110.0	100.0	110.0
36"		90.0	110.0	100.0	110.0
39"		90.0	110.0	100.0	110.0
42"		90.0	110.0	100.0	100.0
45"		XX	XX	100.0	100.0
48"		XX	XX	100.0	100.0
51"		XX	XX	100.0	100.0
54"		XX	XX	100.0	100.0
57"		XX	XX	100.0	100.0
60"		XX	XX	100.0	100.0
63"		XX	XX	100.0	100.0
66"		XX	XX	100.0	100.0
69"		XX	XX	100.0	100.0
72"		XX	XX	100.0	100.0

MULLION/JAMB DESIGN LOAD CAPACITY - PSF
WITHOUT INTERMEDIATE HORIZONTALS

NOMINAL DIMS.		JAMB 'J1' MULLION 'M1'		JAMB 'J2' MULLION 'M2'	
WIDTH (W)	FRAME HEIGHT	EXT.(+)	INT.(-)	EXT.(+)	INT.(-)
30"	126"	90.0	110.0	100.0	110.0
33"		90.0	110.0	100.0	110.0
36"		90.0	110.0	100.0	110.0
39"		90.0	110.0	100.0	110.0
42"		XX	XX	100.0	100.0
45"		XX	XX	100.0	100.0
48"		XX	XX	100.0	100.0
51"		XX	XX	100.0	100.0
54"		XX	XX	100.0	100.0
57"		XX	XX	100.0	100.0
60"		XX	XX	100.0	100.0
63"		XX	XX	100.0	100.0
66"		XX	XX	100.0	100.0
69"		XX	XX	100.0	100.0
30"	132"	90.0	110.0	100.0	110.0
33"		90.0	110.0	100.0	110.0
36"		90.0	110.0	100.0	110.0
39"		90.0	110.0	100.0	110.0
42"		XX	XX	100.0	100.0
45"		XX	XX	100.0	100.0
48"		XX	XX	100.0	100.0
51"		XX	XX	100.0	100.0
54"		XX	XX	100.0	100.0
57"		XX	XX	100.0	100.0
60"		XX	XX	100.0	100.0
63"		XX	XX	100.0	100.0
66"		XX	XX	100.0	100.0
69"		XX	XX	90.0	90.0
72"		XX	XX	90.0	90.0
30"	138"	XX	XX	100.0	100.0
33"		XX	XX	100.0	100.0
36"		XX	XX	100.0	100.0
39"		XX	XX	100.0	100.0
42"		XX	XX	100.0	100.0
45"		XX	XX	100.0	100.0
48"		XX	XX	100.0	100.0
51"		XX	XX	100.0	100.0
54"		XX	XX	100.0	100.0
57"		XX	XX	100.0	100.0
60"		XX	XX	100.0	100.0
63"		XX	XX	100.0	100.0
30"	141"	XX	XX	100.0	100.0
33"		XX	XX	100.0	100.0
36"		XX	XX	100.0	100.0
39"		XX	XX	100.0	100.0
42"		XX	XX	100.0	100.0
45"		XX	XX	100.0	100.0
48"		XX	XX	100.0	100.0
51"		XX	XX	100.0	100.0
54"		XX	XX	100.0	100.0
57"		XX	XX	100.0	100.0
60"		XX	XX	100.0	100.0
63"		XX	XX	100.0	100.0

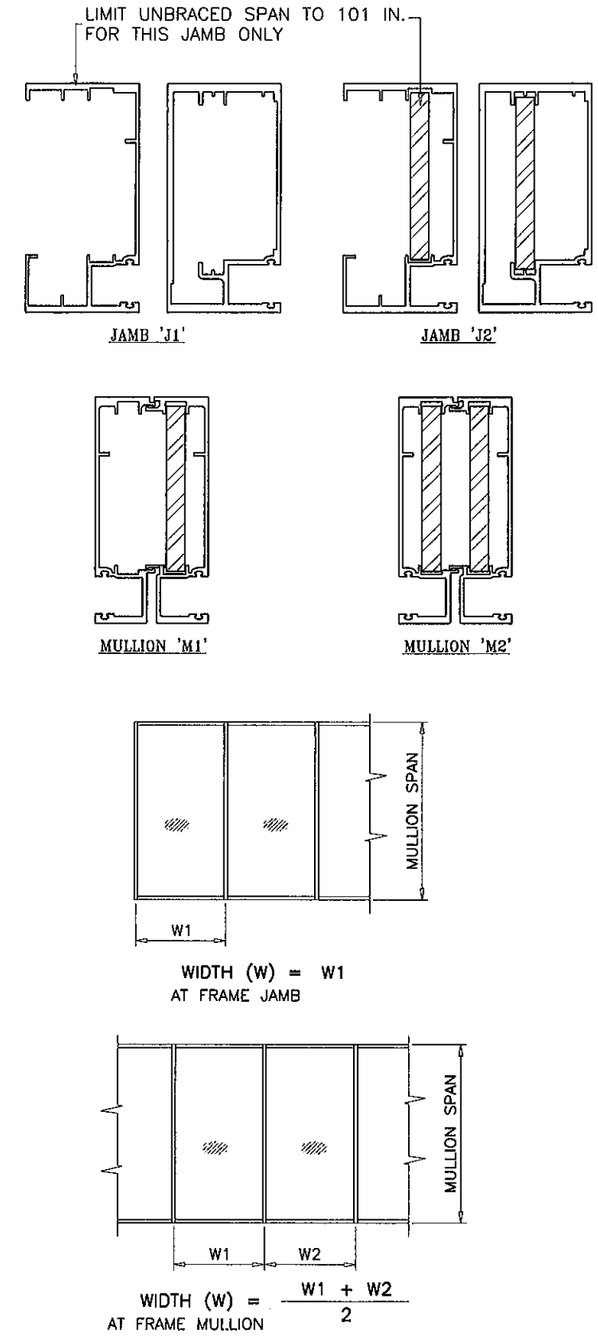

Engr: JAVAD AHMAD
CIVIL
FLA. PE # 70592
C.A.N. 3538

MAR 12 2012

PRODUCT REVISED
as complying with the Florida
Building Code
Acceptance No 12-0330.09
Expiration Date 04/01/2014
By
Miami Dade Product Control

AL-FAROOQ CORPORATION
ENGINEERS & PRODUCT DEVELOPMENT
1235 S.W. 87 AVE
MIAMI, FLORIDA 33174
TEL. (305) 264-8100 FAX. (305) 262-6978
STORE\W03-108RC

HP3060 ALUM. WINDOW WALL SYSTEM (L.M.I.)

R.C. ALUMINUM INDUSTRIES INC.
2805 N.W. 75 TH AVE.
MIAMI, FL. 33122
TEL. (305) 592-1515 FAX. (305) 592-2184

revisions:

no	date	by	description
A	05.12.05		ALT. JAMB ADD. CHART REV.
B	11.11.05		NO CHANGE THIS SHEET
C	02.10.09		NO CHANGE THIS SHEET
D	03.08.12		NO CHANGE THIS SHEET

date: 12-01-03
scale: -
dr. by: HAMID
chk. by:

drawing no.
W03-108

MULLION/JAMB DESIGN LOAD CAPACITY - PSF WITH INTERMEDIATE HORIZONTALS

NOMINAL DIMS.		JAMB 'J1' MULLION 'M1'		JAMB 'J2' MULLION 'M2'	
WIDTH (W)	FRAME HEIGHT	EXT.(+)	INT.(-)	EXT.(+)	INT.(-)
30"	90"	140.0	140.0	140.0	140.0
33"		140.0	140.0	140.0	140.0
36"		140.0	140.0	140.0	140.0
39"		140.0	140.0	140.0	140.0
42"		140.0	140.0	140.0	140.0
45"		140.0	140.0	140.0	140.0
48"		140.0	140.0	140.0	140.0
51"		140.0	140.0	140.0	140.0
54"		140.0	140.0	140.0	140.0
57"		140.0	140.0	140.0	140.0
60"		140.0	140.0	140.0	140.0
63"		140.0	140.0	140.0	140.0
66"		140.0	140.0	140.0	140.0
69"		140.0	140.0	140.0	140.0
72"		140.0	140.0	140.0	140.0
30"	96"	140.0	140.0	140.0	140.0
33"		140.0	140.0	140.0	140.0
36"		140.0	140.0	140.0	140.0
39"		140.0	140.0	140.0	140.0
42"		140.0	140.0	140.0	140.0
45"		140.0	140.0	140.0	140.0
48"		140.0	140.0	140.0	140.0
51"		140.0	140.0	140.0	140.0
54"		140.0	140.0	140.0	140.0
57"		140.0	140.0	140.0	140.0
60"		140.0	140.0	140.0	140.0
63"		140.0	140.0	140.0	140.0
66"		140.0	140.0	140.0	140.0
69"		140.0	140.0	140.0	140.0
72"		XX	XX	100.0	100.0
30"	102"	140.0	140.0	140.0	140.0
33"		140.0	140.0	140.0	140.0
36"		140.0	140.0	140.0	140.0
39"		140.0	140.0	140.0	140.0
42"		140.0	140.0	140.0	140.0
45"		140.0	140.0	140.0	140.0
48"		140.0	140.0	140.0	140.0
51"		140.0	140.0	140.0	140.0
54"		140.0	140.0	140.0	140.0
57"		140.0	140.0	140.0	140.0
60"		140.0	140.0	140.0	140.0
63"		140.0	140.0	140.0	140.0
66"		139.8	139.8	140.0	140.0
69"		XX	XX	100.0	100.0
72"		XX	XX	100.0	100.0

MULLION/JAMB DESIGN LOAD CAPACITY - PSF WITH INTERMEDIATE HORIZONTALS

NOMINAL DIMS.		JAMB 'J1' MULLION 'M1'		JAMB 'J2' MULLION 'M2'	
WIDTH (W)	FRAME HEIGHT	EXT.(+)	INT.(-)	EXT.(+)	INT.(-)
30"	108"	140.0	140.0	140.0	140.0
33"		140.0	140.0	140.0	140.0
36"		140.0	140.0	140.0	140.0
39"		140.0	140.0	140.0	140.0
42"		140.0	140.0	140.0	140.0
45"		140.0	140.0	140.0	140.0
48"		140.0	140.0	140.0	140.0
51"		140.0	140.0	140.0	140.0
54"		140.0	140.0	140.0	140.0
57"		140.0	140.0	140.0	140.0
60"		137.1	137.1	140.0	140.0
63"		130.6	130.6	139.6	139.6
66"		XX	XX	100.0	100.0
69"		XX	XX	100.0	100.0
72"		XX	XX	100.0	100.0
30"	114"	140.0	140.0	140.0	140.0
33"		140.0	140.0	140.0	140.0
36"		140.0	140.0	140.0	140.0
39"		140.0	140.0	140.0	140.0
42"		140.0	140.0	140.0	140.0
45"		140.0	140.0	140.0	140.0
48"		140.0	140.0	140.0	140.0
51"		140.0	140.0	140.0	140.0
54"		136.8	136.8	140.0	140.0
57"		129.6	129.6	138.5	138.5
60"		123.1	123.1	131.5	131.5
63"		XX	XX	100.0	100.0
66"		XX	XX	100.0	100.0
69"		XX	XX	100.0	100.0
72"		XX	XX	100.0	100.0
30"	120"	90.0	110.0	100.0	110.0
33"		90.0	110.0	100.0	110.0
36"		90.0	110.0	100.0	110.0
39"		90.0	110.0	100.0	110.0
42"		90.0	110.0	100.0	100.0
45"		XX	XX	100.0	100.0
48"		XX	XX	100.0	100.0
51"		XX	XX	100.0	100.0
54"		XX	XX	100.0	100.0
57"		XX	XX	100.0	100.0
60"		XX	XX	100.0	100.0
63"		XX	XX	100.0	100.0
66"		XX	XX	100.0	100.0
69"		XX	XX	100.0	100.0
72"		XX	XX	100.0	100.0

MULLION/JAMB DESIGN LOAD CAPACITY - PSF WITH INTERMEDIATE HORIZONTALS

NOMINAL DIMS.		JAMB 'J1' MULLION 'M1'		JAMB 'J2' MULLION 'M2'	
WIDTH (W)	FRAME HEIGHT	EXT.(+)	INT.(-)	EXT.(+)	INT.(-)
30"	126"	90.0	110.0	100.0	110.0
33"		90.0	110.0	100.0	110.0
36"		90.0	110.0	100.0	110.0
39"		90.0	110.0	100.0	110.0
42"		XX	XX	100.0	100.0
45"		XX	XX	100.0	100.0
48"		XX	XX	100.0	100.0
51"		XX	XX	100.0	100.0
54"		XX	XX	100.0	100.0
57"		XX	XX	100.0	100.0
60"		XX	XX	100.0	100.0
63"		XX	XX	100.0	100.0
66"		XX	XX	100.0	100.0
69"		XX	XX	100.0	100.0
30"	132"	90.0	110.0	100.0	110.0
33"		90.0	110.0	100.0	110.0
36"		90.0	110.0	100.0	110.0
39"		90.0	106.8	100.0	110.0
42"		XX	XX	100.0	100.0
45"		XX	XX	100.0	100.0
48"		XX	XX	100.0	100.0
51"		XX	XX	100.0	100.0
54"		XX	XX	100.0	100.0
57"		XX	XX	100.0	100.0
60"		XX	XX	100.0	100.0
63"		XX	XX	100.0	100.0
66"		XX	XX	100.0	100.0
69"		XX	XX	90.0	90.0
72"		XX	XX	90.0	90.0
30"	138"	XX	XX	100.0	100.0
33"		XX	XX	100.0	100.0
36"		XX	XX	100.0	100.0
39"		XX	XX	100.0	100.0
42"		XX	XX	100.0	100.0
45"		XX	XX	100.0	100.0
48"		XX	XX	100.0	100.0
51"		XX	XX	100.0	100.0
54"		XX	XX	100.0	100.0
57"		XX	XX	100.0	100.0
60"		XX	XX	100.0	100.0
63"		XX	XX	100.0	100.0
30"	141"	XX	XX	100.0	100.0
33"		XX	XX	100.0	100.0
36"		XX	XX	100.0	100.0
39"		XX	XX	100.0	100.0
42"		XX	XX	100.0	100.0
45"		XX	XX	100.0	100.0
48"		XX	XX	100.0	100.0
51"		XX	XX	100.0	100.0
54"		XX	XX	100.0	100.0
57"		XX	XX	100.0	100.0
60"		XX	XX	100.0	100.0
63"		XX	XX	100.0	100.0

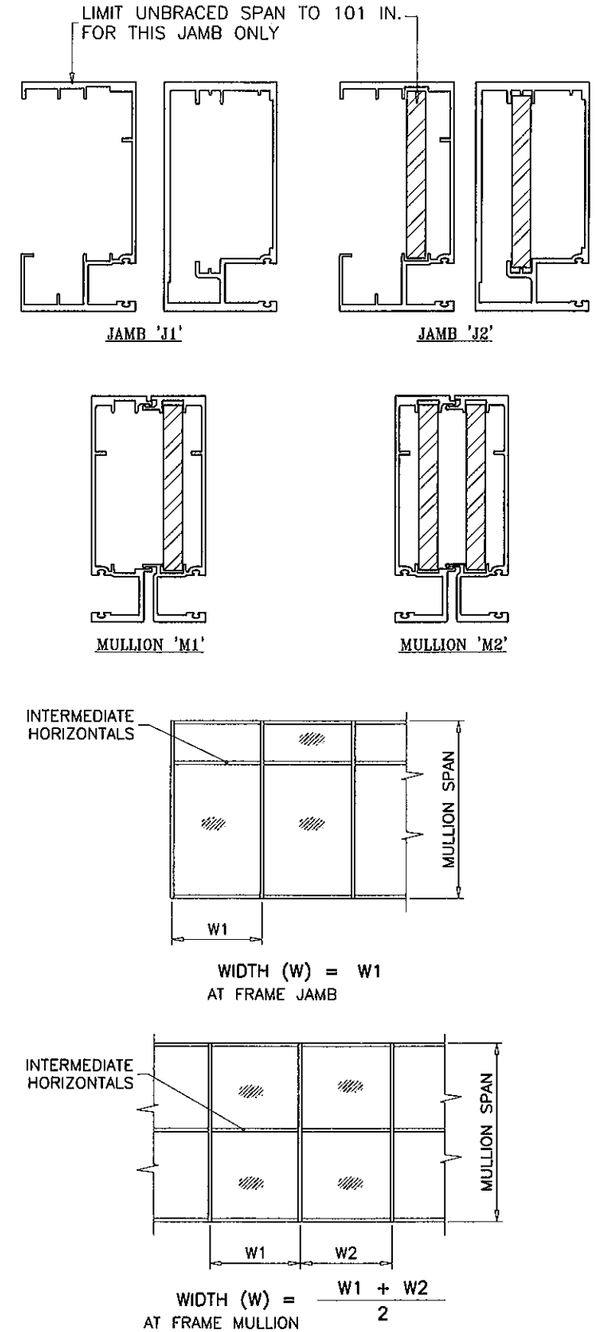

Engr: JAVAD AHMAD
CIVIL
FLA. PE # 70592
C.A.N. 3538

MAR 12 2012

PRODUCT REVISED
as complying with the Florida
Building Code
Acceptance No 12-0330.09
Expiration Date 04/01/2014
By
Miami Dade Product Control

AL-FAROOQ CORPORATION
ENGINEERS & PRODUCT DEVELOPMENT
1235 S.W. 87 AVE
MIAMI, FLORIDA 33174
TEL. (305) 264-8100 FAX. (305) 262-6978

STORE\W03-108RC

HP3060 ALUM. WINDOW WALL SYSTEM (L.M.I.)

R.C. ALUMINUM INDUSTRIES INC.
2805 N.W. 75 TH AVE.
MIAMI, FL. 33122
TEL. (305) 592-1515 FAX. (305) 592-2184

revisions:

no	date	by	description
A	05.12.05		ALT. JAMB ADDED
B	11.11.05		NO CHANGE THIS SHEET
C	02.10.09		NO CHANGE THIS SHEET
D	03.08.12		NO CHANGE THIS SHEET

date: 12-01-03
scale: -
dr. by: HAMID
chk. by:

drawing no.
W03-108

sheet 5 of 9

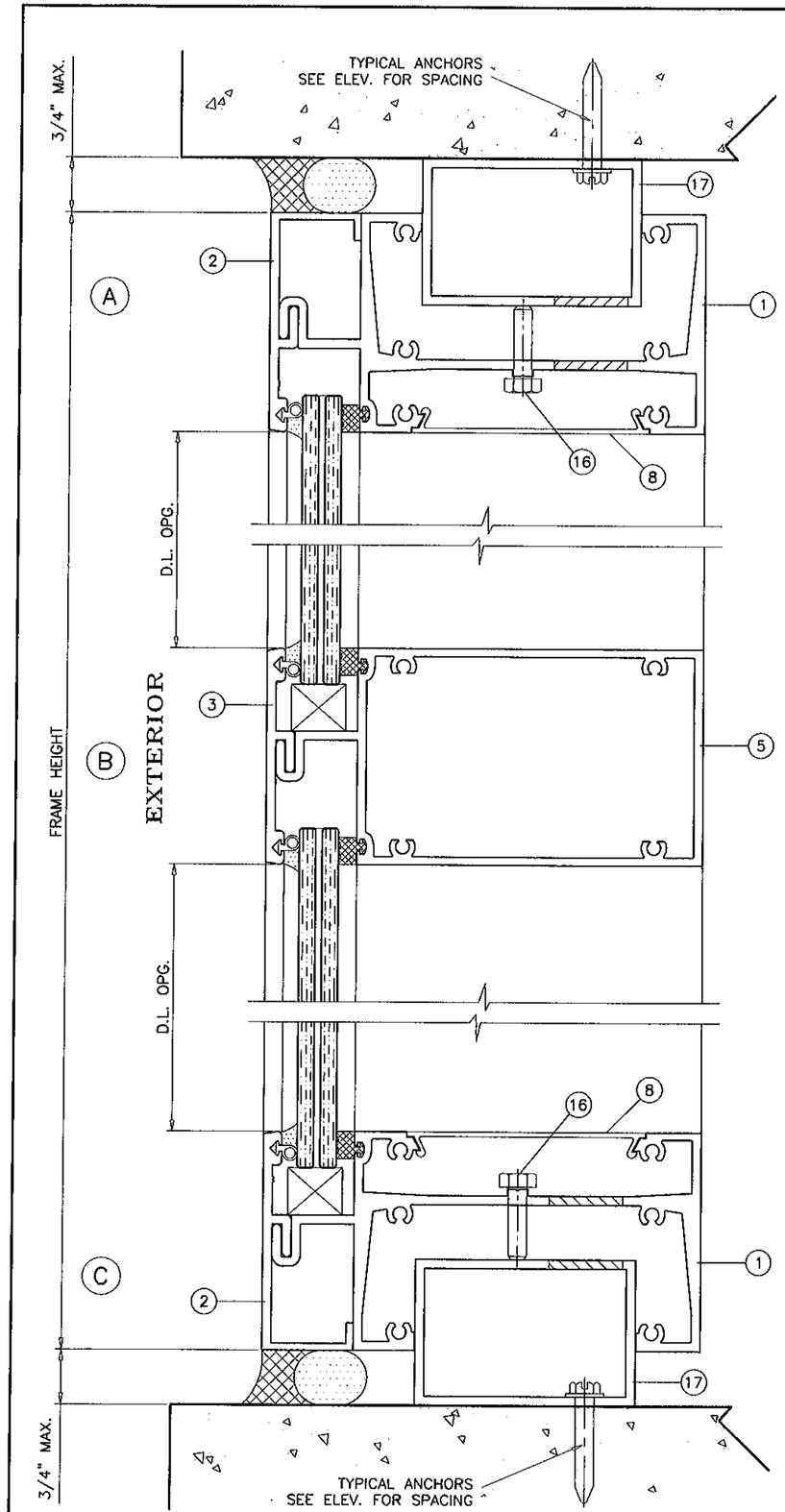

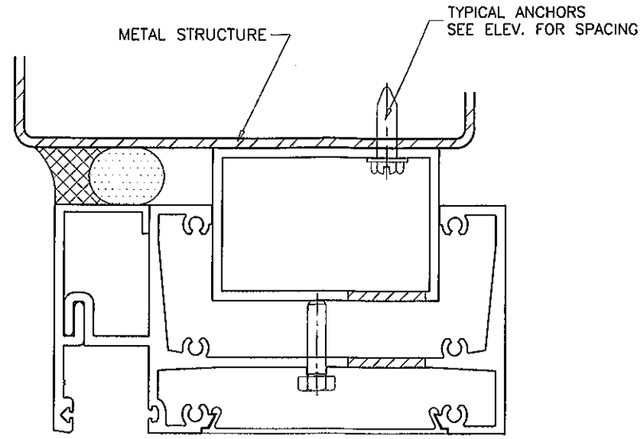

METAL STRUCTURES NOT BY RC ALUMINUM
MUST SUPPORT LOADS IMPOSED BY GLAZING SYSTEM AND TRANSFER THEM TO THE BUILDING STRUCTURE.

TYPICAL ANCHORS: SEE ELEV. FOR SPACING

1/4" HILTI KWIK-CON II (Fu=163 KSI, Fy=157 KSI)

DIRECTLY INTO CONCRETE (4000 PSI MIN)
1-5/8" MIN. EMBED INTO CONCRETE AT HEAD/SILL
1-3/4" MIN. EMBED INTO CONCRETE/BLOCK AT JAMBS

1/4" HILTI KWIK-FLEX SELF DRILLING SCREWS (Fu=92 KSI, Fy=120 KSI)
INTO METAL STRUCTURES

STEEL : 1/8" THK. MIN. (Fy = 36 KSI MIN.)
ALUMINUM : 1/8" THK. MIN. (6063-T6 MIN.)
(STEEL IN CONTACT WITH ALUMINUM TO BE PLATED OR PAINTED)

ANCHOR EDGE DISTANCES

INTO CONCRETE = 2-1/2" MIN.
INTO METAL STRUCTURE = 3/4" MIN.

CONCRETE f'c = 4000 PSI MIN.
C-90 HOLLOW/FILLED BLOCK f'm = 2000 PSI MIN.

SEALANTS:

ALL FRAME CORNERS AND MULLION SEAMS SEALED WITH SILICONE.

PRODUCT REVISED
as complying with the Florida
Building Code
Acceptance No 12-0330.09
Expiration Date 04/01/2014
By
Miami Dade Product Control

Engr: JAVAD AHMAD
CIVIL
FLA. PE # 70592
C.A.N. 3538

MAR 1 2 2012

AL-FAROOQ CORPORATION
ENGINEERS & PRODUCT DEVELOPMENT
1235 S.W. 87 AVE
MIAMI, FLORIDA 33174
TEL. (305) 264-8100 FAX. (305) 262-6978
STORE\W03-108RC

HP3060 ALUM. WINDOW WALL SYSTEM (L.M.I.)

R.C. ALUMINUM INDUSTRIES INC.
2805 N.W. 75 TH AVE.
MIAMI, FL. 33122
TEL. (305) 592-1515 FAX. (305) 592-2184

revisions:

no	date	by	description
A	05.12.05		ANCHOR EMBED REV.
B	11.11.05		EDGE DIST. REV.
C	02.10.09		UPDATED FOR 2007 FBC
D	03.08.12		NO CHANGE THIS SHEET

date: 12-01-03
scale: 1/2" = 1"
dr. by: HAMID
chk. by:

drawing no.
W03-108

sheet 6 of 9

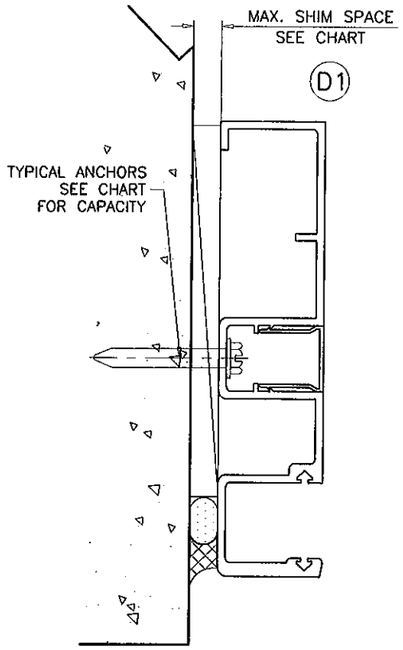

JAMB ANCHORS DESIGN LOAD CAPACITY - PSF						
	1/4" MAX. SHIM		3/8" MAX. SHIM		1/2" MAX. SHIM	
	TYPE 'A'	TYPE 'B'	TYPE 'A'	TYPE 'B'	TYPE 'A'	TYPE 'B'
WIDTH (W)	EXT. (+) INT. (-)	EXT. (+) INT. (-)	EXT. (+) INT. (-)	EXT. (+) INT. (-)	EXT. (+) INT. (-)	EXT. (+) INT. (-)
42"	140.0	140.0	140.0	140.0	140.0	118.9
48"	140.0	140.0	140.0	127.5	140.0	104.0
54"	140.0	140.0	140.0	113.3	140.0	92.4
57"	140.0	140.0	140.0	107.4	140.0	87.6
60"	140.0	140.0	140.0	102.0	140.0	83.2
63"	140.0	140.0	140.0	97.1	140.0	79.2
66"	140.0	140.0	140.0	92.7	137.8	75.6
69"	139.1	140.0	139.1	88.7	131.8	72.3
72"	133.3	140.0	133.3	85.0	126.3	69.3

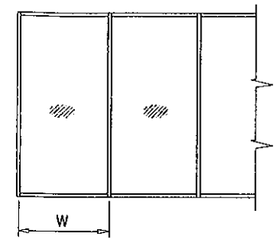

MAX. FRAME HEIGHT	GAP	
	MIN.	MAX.
78"	1/4"	3/4"
114"	3/8"	3/4"
141"	1/2"	3/4"

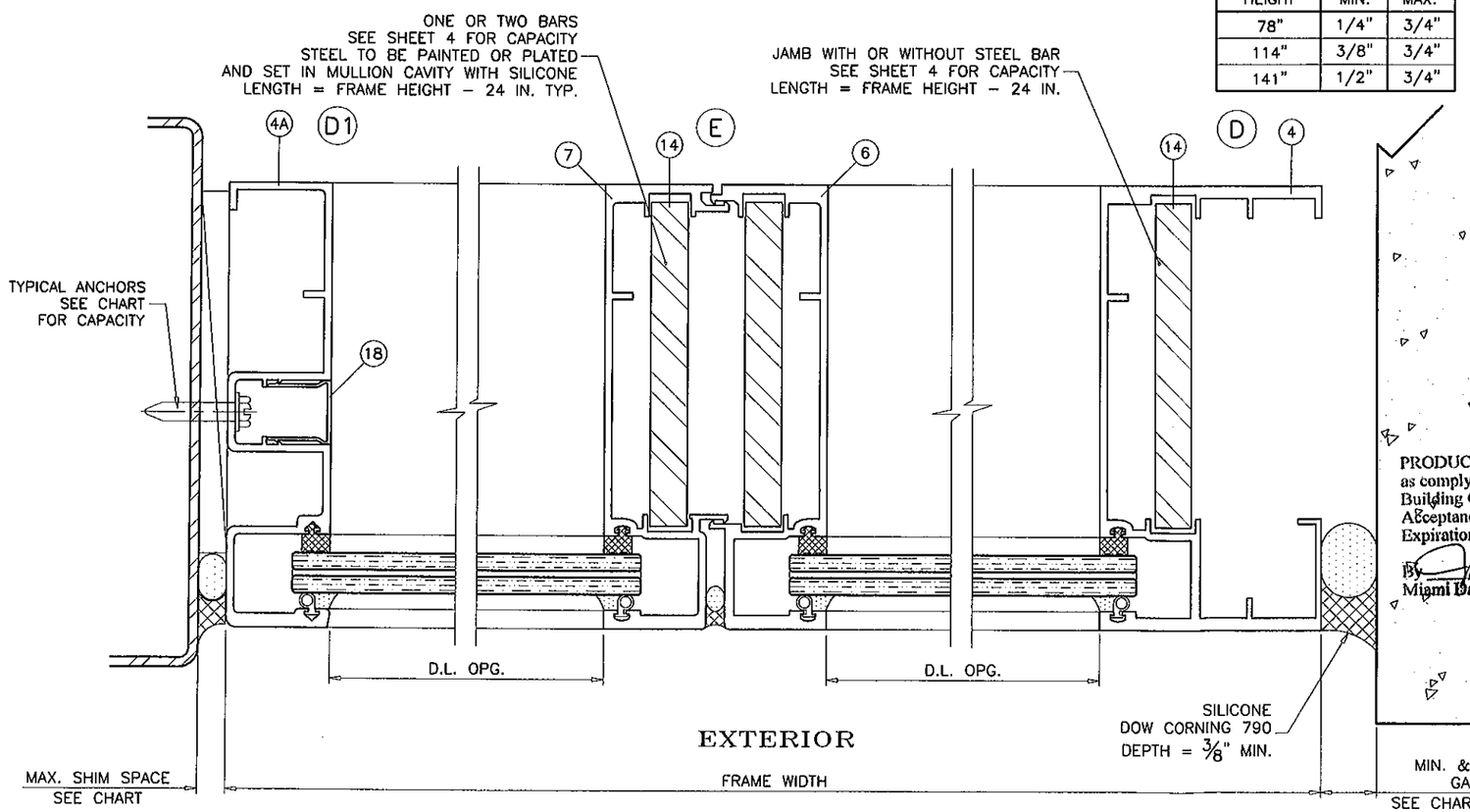

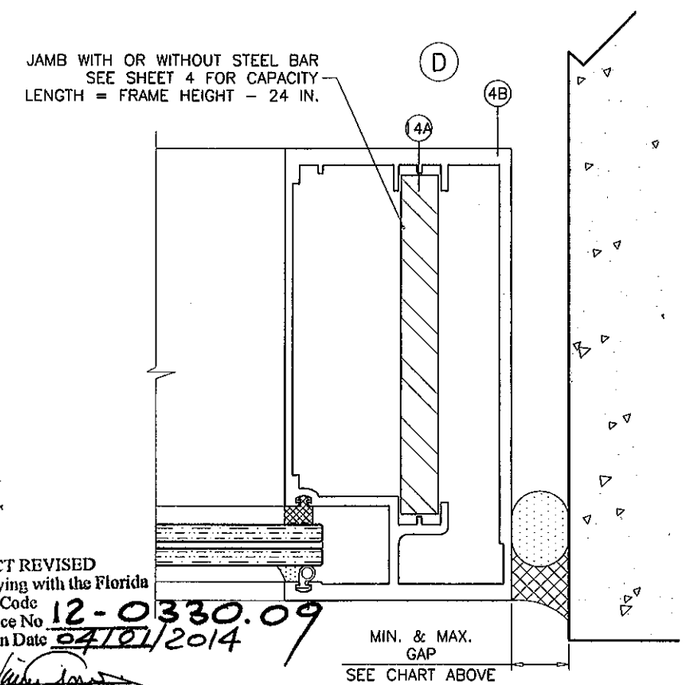

PRODUCT REVISED
as complying with the Florida
Building Code
Acceptance No. 12-0330.09
Expiration Date 04/01/2014
By
Miami Dade Product Control

Engr: JAVAD AHMAD
CIVIL
FLA. PE # 70592
C.A.N. 3538

MAR 1 2 2012

AL-FAROOQ CORPORATION
ENGINEERS & PRODUCT DEVELOPMENT
1235 S.W. 87 AVE
MIAMI, FLORIDA 33174
TEL. (305) 264-8100 FAX. (305) 262-6978

STORE\W03-108RC

HP3060 ALUM. WINDOW WALL SYSTEM (L.M.I.)

R.C. ALUMINUM INDUSTRIES INC.
2805 N.W. 75 TH AVE.
MIAMI, FL. 33122
TEL. (305) 592-1515 FAX. (305) 592-2184

revisions:

no	date	by	description
A	05.12.05		ALT. JAMB ADD. CHART REV.
B	11.11.05		NO CHANGE THIS SHEET
C	02.10.09		UPDATED FOR 2007 FBC
D	03.08.12		NO CHANGE THIS SHEET

date: 12-01-03
scale: 1/2" = 1"
dr. by: HAMID
chk. by:

drawing no.
W03-108

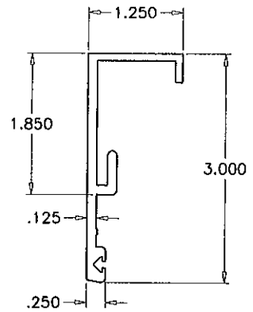

(2) GLAZING RETAINER HEAD/SILL

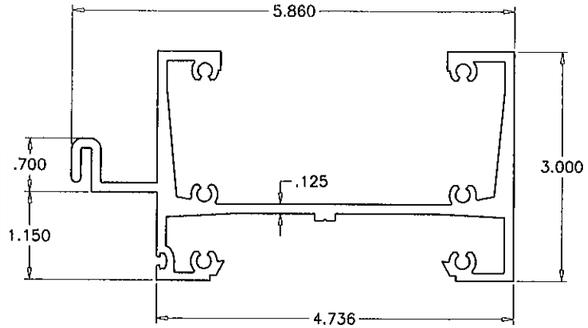

(1) FRAME HEAD/SILL

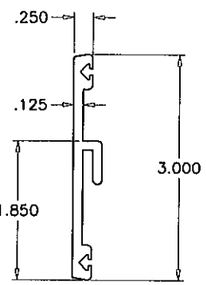

(3) GLAZING RETAINER HORIZONTAL

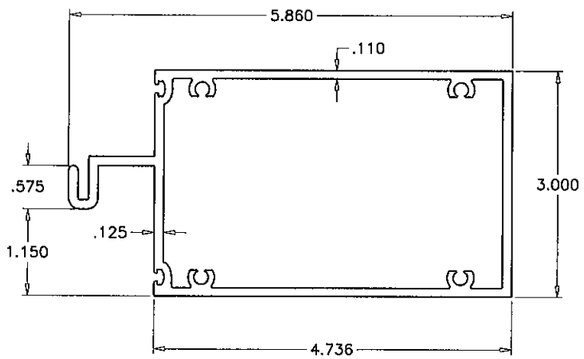

(5) HORIZONTAL

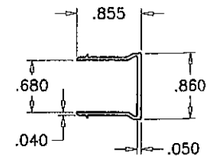

(18) SNAP-IN COVER JAMB

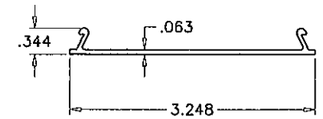

(8) SNAP-IN COVER HEAD/SILL

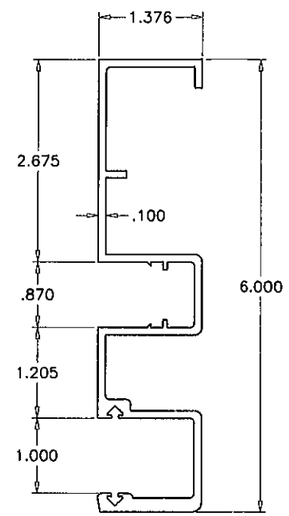

(4A) ALT. FRAME JAMB

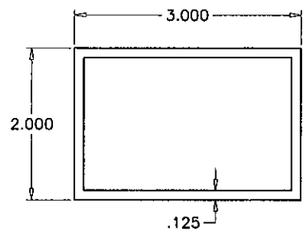

(17) ANCHOR TUBE

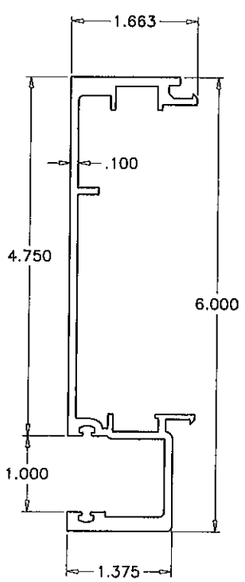

(7) MALE MULLION

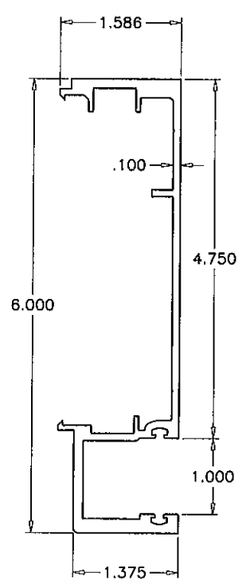

(6) FEMALE MULLION

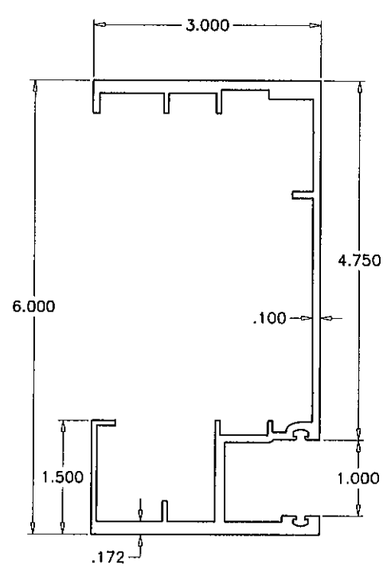

(4) FRAME JAMB

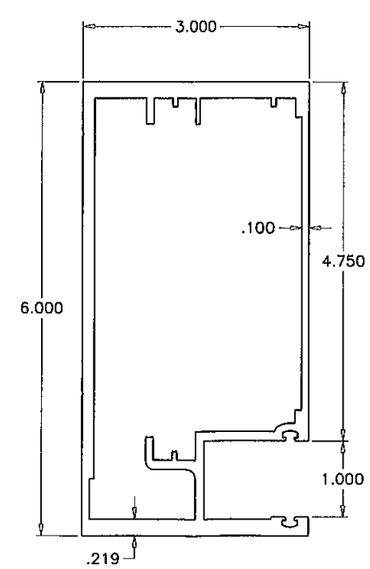

(4B) ALT. FRAME JAMB

PRODUCT REVISED
as complying with the Florida
Building Code
Acceptance No 12-0330.09
Expiration Date 04/01/2014
By
Miami Dade Product Control

Engr: JAVAD AHMAD
CIVIL
FLA. PE # 70592
C.A.N. 3538

MAR 12 2012

AL-FAROOQ CORPORATION
ENGINEERS & PRODUCT DEVELOPMENT
1235 S.W. 87 AVE
MIAMI, FLORIDA 33174
TEL. (305) 264-8100 FAX. (305) 262-6978

STORE\W03-108RC

HP3060 ALUM. WINDOW WALL SYSTEM (L.M.I.)

R.C. ALUMINUM INDUSTRIES INC.
2805 N.W. 75 TH AVE.
MIAMI, FL. 33122
TEL. (305) 592-1515 FAX. (305) 592-2184

revisions:

no	date	by	description
A	05.12.05		ALT. JAMB ADDED
B	11.11.05		NO CHANGE THIS SHEET
C	02.10.09		UPDATED FOR 2007 FBC
D	03.08.12		NO CHANGE THIS SHEET

date: 12-01-03
scale: 1/2" = 1"
dr. by: HAMID
chk. by:

drawing no.
W03-108

sheet 8 of 9

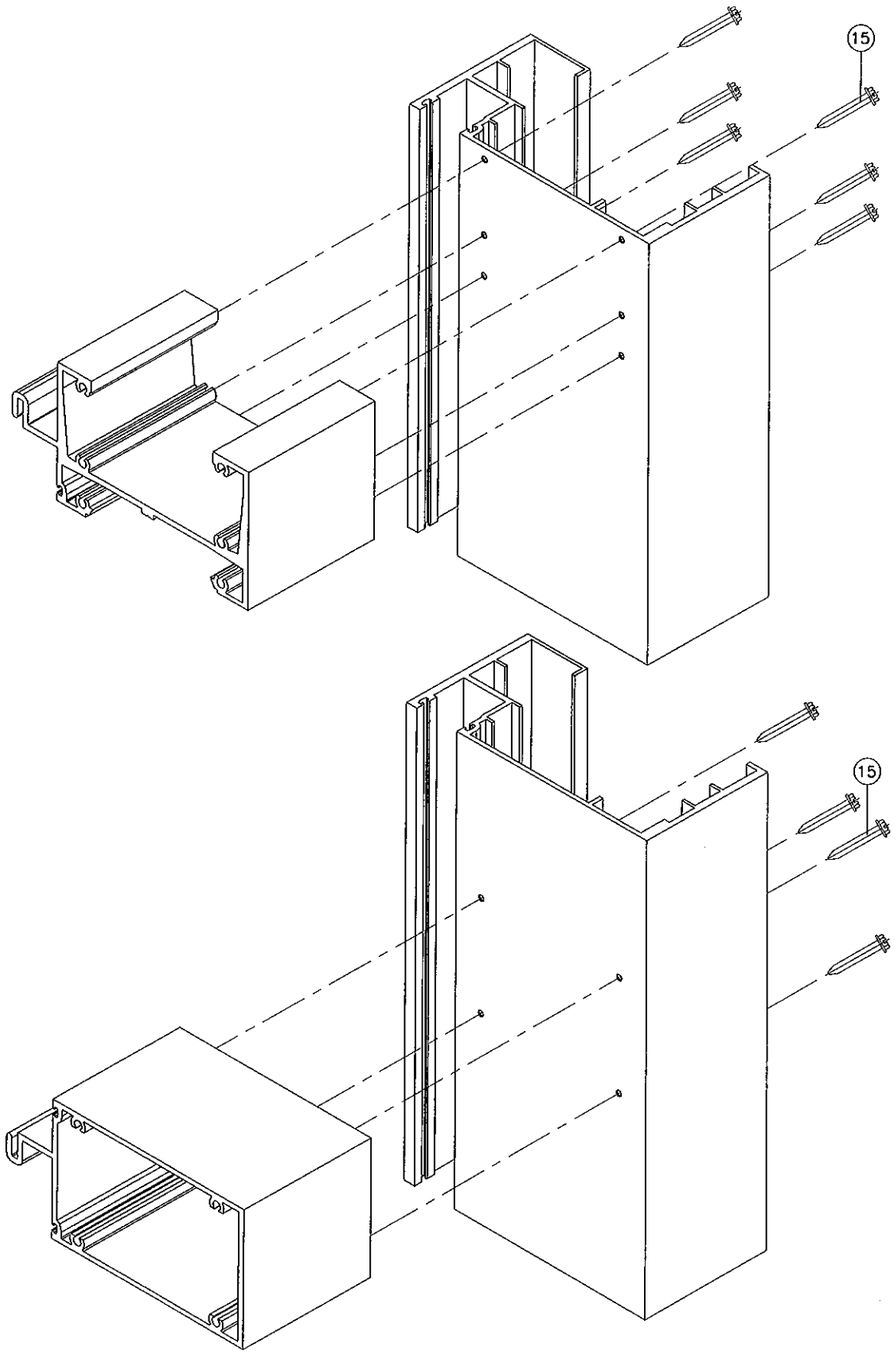

FRAME CORNER

MATERIALS LIST					
ITEM NO.	PART NUMBER	QUANTITY	DESCRIPTION	MATERIAL	MANF./SUPPLIER/REMARKS
1	HP3060-051	AS REQD.	FRAME HEAD/SILL	6005-T5	–
2	FX345-006	AS REQD.	GLAZING RETAINER (HEAD/SILL)	6063-T6	–
3	FX345-005	AS REQD.	GLAZING RETAINER (HORIZONTAL)	6063-T6	–
4	HP3060-036	AS REQD.	FRAME JAMB	6063-T6	–
4A	HP3060-022	AS REQD.	ALT. FRAME JAMB	6063-T6	–
4B	HP3060-068	AS REQD.	ALT. FRAME JAMB	6063-T6	–
5	HP3060-041	AS REQD.	HORIZONTAL	6063-T6	–
6	HP3060-037	AS REQD.	FEMALE MULLION	6063-T6	–
7	HP3060-038	AS REQD.	MALE MULLION	6063-T6	–
8	HP3060-011	AS REQD.	SNAP-IN COVER HEAD/SILL	6063-T6	–
9	WV-8215	AS REQD.	GLAZING GASKET	VINYL	WIBORG
10	WV-3289	AS REQD.	BULB WEATHERSTRIPPING	VINYL	WIBORG
11	–	2/ LITE	SETTING BLOCKS (1/2" X 5/8" X 4")	NEOPRENE	LOWE
12	–	–	SEALANT DOW CORNING 995	SILICONE	–
13	–	–	SEALANT DOW CORNING 795	SILICONE	–
14	–	AS REQD.	REINFORCING BAR (1/2" X 4-3/8")	STEEL	SILICONED IN PLACE
14A	–	AS REQD.	REINFORCING BAR (1/2" X 4-1/2")	STEEL	SILICONED IN PLACE
15	–	AS REQD.	FRAME ASSEMBLY SCREWS	–	# 12 X 1-1/4" PH SMS
16	–	AS REQD.	LEVELING SCREWS	–	1/4-20 X 3/4" HH MS
17	–	AS REQD.	ANCHOR TUBE (2 X 3 X 1/8")	–	7" LONG
18	245FX-011	AS REQD.	SNAP-IN COVER JAMB	6063-T5	–

PRODUCT REVISED
as complying with the Florida
Building Code
Acceptance No 12-0330.09
Expiration Date 04/01/2014
By
Miami Dade Product Control

Engr: JAVAD AHMAD
CIVIL
FLA. PE # 70592
C.A.N. 3538

MAR 12 2012

AL-FAROOQ CORPORATION
ENGINEERS & PRODUCT DEVELOPMENT
1235 S.W. 87 AVE
MIAMI, FLORIDA 33174
TEL. (305) 264-8100 FAX. (305) 262-6978
STORE\W03-108RC

HP3060 ALUM. WINDOW WALL SYSTEM (L.M.I.)

R.C. ALUMINUM INDUSTRIES INC.
2805 N.W. 75 TH AVE.
MIAMI, FL. 33122
TEL. (305) 592-1515 FAX. (305) 592-2184

revisions:

no	date	by	description
C	02.10.09		UPDATED FOR 2007 FBC
D	03.08.12		NO CHANGE THIS SHEET

date: 12-01-03
scale: 1/2" = 1"
dr. by: HAMID
chk. by:

drawing no.
W03-108

sheet 9 of 9