MIAMI-DADE COUNTY
DEPARTMENT OF PERMITTING, ENVIRONMENT, AND REGULATORY AFFAIRS (PERA)
BOARD AND CODE ADMINISTRATION DIVISION

MIAMI–DADE COUNTY, FLORIDA
PRODUCT CONTROL SECTION
11805 SW 26 Street, Room 208
Miami, Florida 33175–2474
T (786) 315–2590 F (786) 315–2599
www.miamidade.gov/pera/

NOTICE OF ACCEPTANCE (NOA)

R. C. Aluminum Industries, Inc.
2805 NW 75th Ave
Miami, FL 33122

SCOPE:

This NOA is being issued under the applicable rules and regulations governing the use of construction materials. The documentation submitted has been reviewed and accepted by Miami–Dade County PERA–Product Control Section to be used in Miami–Dade County and other areas where allowed by the Authority Having Jurisdiction (AHJ).

This NOA shall not be valid after the expiration date stated below. The Miami–Dade County Product Control Section (In Miami–Dade County) and/or the AHJ (in areas other than Miami–Dade County) reserve the right to have this product or material tested for quality assurance purposes. If this product or material fails to perform in the accepted manner, the manufacturer will incur the expense of such testing and the AHJ may immediately revoke, modify, or suspend the use of such product or material within their jurisdiction. PERA reserves the right to revoke this acceptance, if it is determined by Miami–Dade County Product Control Section that this product or material fails to meet the requirements of the applicable building code.

This product is approved as described herein, and has been designed to comply with the Florida Building Code, including the High Velocity Hurricane Zone.

DESCRIPTION: Series "S–5250" Aluminum Window Wall System – L.M.I.

APPROVAL DOCUMENT: Drawing No. **W09–64**, titled "Series S–5250 Alum. Window Wall System (L.M.I.)", sheets 1 through 8 of 8, dated 12/30/09, prepared by AL–Farooq Corporation, with latest revised "**B**" dated 03/05/12, signed and sealed by Javad Ahmad, P. E., bearing the Miami–Dade County Product Control Revision stamp with the Notice of Acceptance number and Expiration date by the Miami–Dade County Product Control Section.

MISSILE IMPACT RATING: Large and Small Missile Impact Resistant.

LABELING: Each unit shall bear a permanent label with the manufacturer's name or logo, city, state, series and following statement: "Miami–Dade County Product Control Approved" unless otherwise noted herein.

RENEWAL of this NOA shall be considered after a renewal application has been filed and there has been no change in the applicable building code negatively affecting the performance of this product.

TERMINATION of this NOA will occur after the expiration date or if there has been a revision or change in the materials, use, and/ or manufacture of the product or process. Misuse of this NOA as an endorsement of any product, for sales, advertising or any other purposes shall automatically terminate this NOA. Failure to comply with any section of this NOA shall be cause for termination and removal of NOA.

ADVERTISEMENT: The NOA number preceded by the words Miami–Dade County, Florida, and followed by the expiration date may be displayed in advertising literature. If any portion of the NOA is displayed, then it shall be done in its entirety.

INSPECTION: A copy of this entire NOA shall be provided to the user by the manufacturer or its distributors and shall be available for inspection at the job site at the request of the Building Official.

This NOA **revises NOA No. 10–0804.14** and consists of this page 1, evidence page E–1, as well as approval document mentioned above.

The submitted documentation was reviewed by **Jaime D. Gascon, P. E.**

MIAMI-DADE COUNTY APPROVED

J Gascon
6/13/12

NOTICE OF ACCEPTANCE: EVIDENCE SUBMITTED

A. DRAWINGS

1. Manufacturer's die drawings and sections.
   (Submitted under previous NOA No. 10–0804.14)
2. Drawing No. **W09–64**, titled "Series S–5250 Alum. Window Wall System (L.M.I.)", sheets 1 through 8 of 8, dated 12/30/09, prepared by AL–Farooq Corporation, with latest revised "**B**" dated 03/05/12, signed and sealed by Javad Ahmad, P. E.

B. TESTS

1. Test reports on: 1) Air Infiltration Test, per FBC, TAS 202–94
   2) Uniform Static Air Pressure Test, Loading per FBC TAS 202–94
   3) Water Resistance Test, per FBC, TAS 202–94
   4) Large Missile Impact Test per FBC, TAS 201–94
   5) Cyclic Wind Pressure Loading per FBC, TAS 203–94

   along with marked–up drawings and installation diagram of an aluminum window wall system, prepared by Fenestration Testing Laboratory, Inc., Test Reports No.'s **FTL–5946**, dated 05/27/09, **FTL–5622**, dated 07/16/08 and **FTL–3818**, dated 06/12/03, signed and sealed by Michael R. Wenzel, P. E., Carlos S. Ronda, P. E. and Joseph C. Chan, P. E.
   (Submitted under previous NOA No. 10–0804.14)

C. CALCULATIONS

1. Anchor verification calculations and structural analysis, complying with FBC, prepared by AL–Farooq Corporation, dated 03/29/10, signed and sealed by Javad Ahmad, P. E. ***(Submitted under previous NOA No. 10–0804.14)***
2. **Glazing complies with ASTM E 1300–04**

D. QUALITY ASSURANCE

1. Miami–Dade Department of Permitting, Environment, and Regulatory Affairs (PERA).

E. MATERIAL CERTIFICATIONS

1. Notice of Acceptance No. **11–0624.02** issued to E.I. DuPont DeNemours & Co., Inc. for their "**DuPont Sentry Glass® Interlayer**" dated 05/26/2010, expiring on 01/14/17.

F. STATEMENTS

1. Statement letter of no financial interest, conformance and compliance with the **FBC–2010**, dated 03/02/12, signed and sealed by Javad Ahmad, P. E.
2. Laboratory compliance letters prepared by Fenestration Testing Laboratory, Inc., for the following Test Reports No.'s **FTL–5946**, dated 05/27/09, **FTL–5622**, dated 07/16/08 and **FTL–3818**, dated 06/12/03, signed and sealed by Michael R. Wenzel, P. E., Carlos S. Ronda, P. E. and Joseph C. Chan, P. E.
   (Submitted under previous NOA No. 10–0804.14)

G. OTHERS

1. Notice of Acceptance No. **10–0804.14**, issued to R. C. Aluminum Industries, Inc., for their Series "**S–5250 Aluminum Window Wall System – L.M.I.**", approved on 12/30/10 and expiring on 12/30/15.

Jaime D. Gascon, P. E.
Product Control Section Supervisor
NOA No. 12–0330.13
Expiration Date: December 30, 2015
Approval Date: June 21, 2012

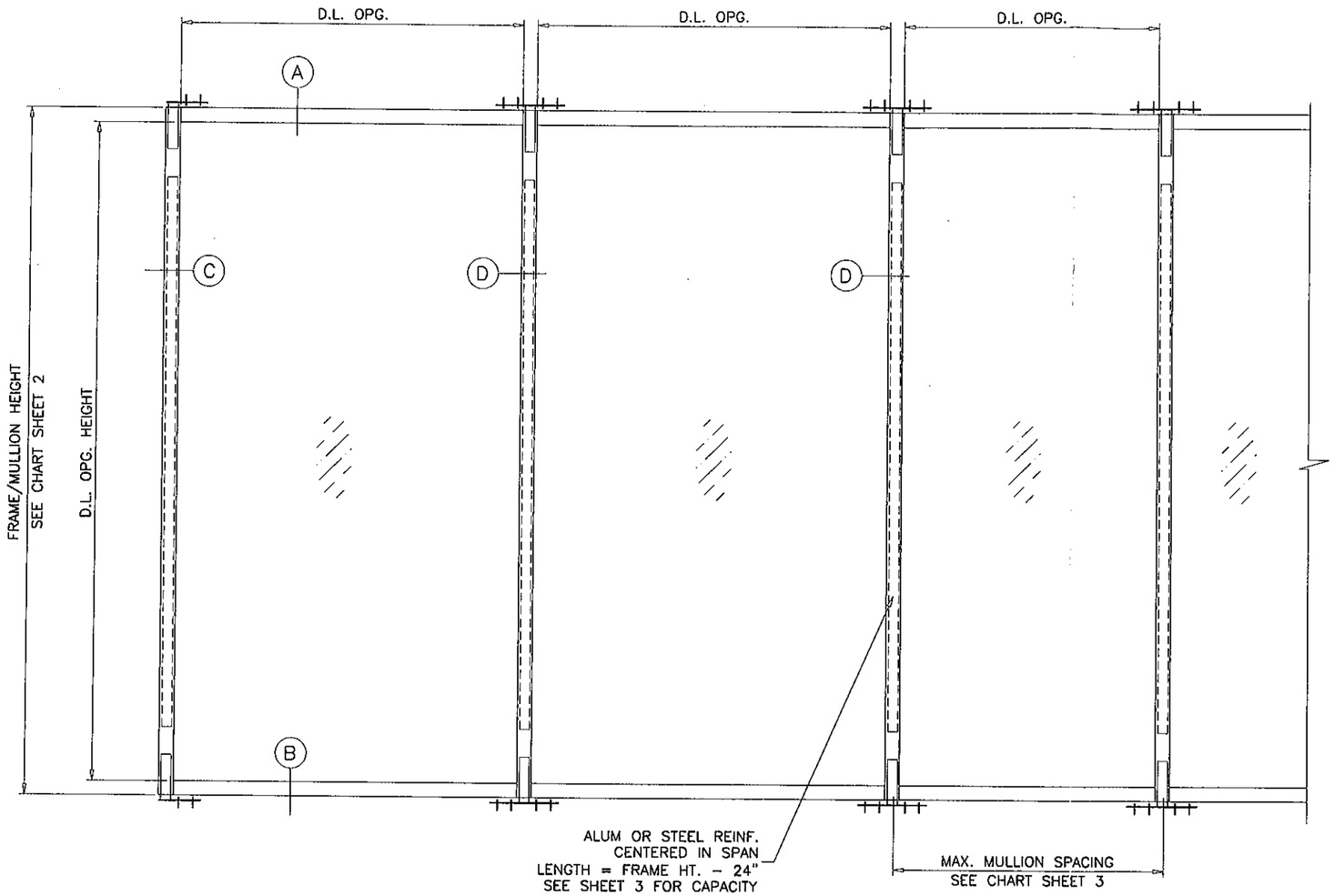

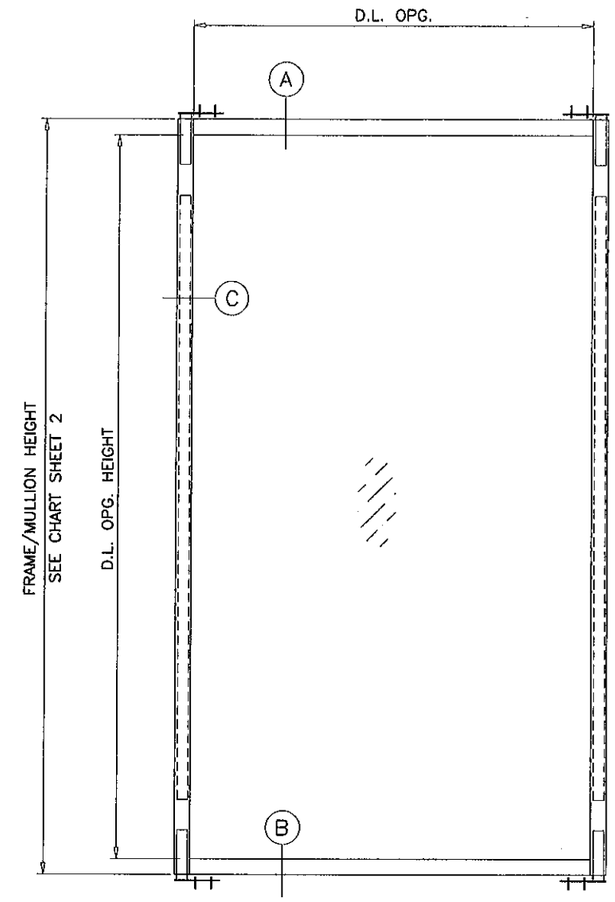

TYPICAL ELEVATIONS

THIS SYSTEM IS RATED FOR LARGE AND SMALL MISSILE IMPACT.
SHUTTERS ARE NOT REQUIRED.

S-5250 ALUMINUM WINDOW WALL SYSTEM

THIS PRODUCT HAS BEEN DESIGNED AND TESTED TO COMPLY WITH THE REQUIREMENTS OF THE FLORIDA BUILDING CODE INCLUDING HIGH VELOCITY HURRICANE ZONE (HVHZ).

ANCHORS SHALL BE AS LISTED, SPACED AS SHOWN ON DETAILS, ANCHORS EMBEDMENT TO BASE MATERIAL SHALL BE BEYOND WALL DRESSING OR STUCCO.

ANCHORING OR LOADING CONDITIONS NOT SHOWN IN THESE DETAILS ARE NOT PART OF THIS APPROVAL.

MATERIALS INCLUDING BUT NOT LIMITED TO STEEL/METAL SCREWS, THAT COME INTO CONTACT WITH OTHER DISSIMILAR MATERIALS SHALL MEET THE REQUIREMENTS OF THE FLORIDA BLDG. CODE SECTION 2003.8.4.

INSTRUCTIONS:

USE CHARTS AS FOLLOWS.

STEP 1 DETERMINE DESIGN WIND LOAD REQUIREMENT BASED ON WIND VELOCITY, BLDG. HEIGHT, WIND ZONE USING APPLICABLE ASCE 7 STANDARD.

STEP 2 CHECK MULLION CAPACITY FOR A GIVEN SPACING AND HEIGHT USING CHARTS ON SHEET 2
THE CAPACITY SHOULD EXCEED THE DESIGN LOAD.

STEP 3 USING CHART ON SHEETS 3 SELECT ANCHOR OPTION WITH DESIGN RATING MORE THAN DESIGN LOAD SPECIFIED IN STEP 1 ABOVE.

STEP 4 THE LOWEST VALUE RESULTING FROM STEPS 2 & 3 SHALL APPLY TO ENTIRE SYSTEM.

PRODUCT REVISED
as complying with the Florida
Building Code
Acceptance No 12-0330.13
Expiration Date 12/30/2015
By
Miami Dade Product Control

LAMINATED GLASS
LARGE MISSILE IMPACT

Engr: JAVAD AHMAD
CIVIL
FLA. PE # 70592
C.A.N. 3538

MAR 09 2012

AL-FAROOQ CORPORATION
ENGINEERS & PRODUCT DEVELOPMENT
1235 S.W. 87 AVE
MIAMI, FLORIDA 33174
TEL. (305) 264-8100 FAX. (305) 262-6978
STORE\W09-64RC

S-5250 ALUM. WINDOW WALL SYSTEM (L.M.I.)

R.C. ALUMINUM INDUSTRIES INC.
2805 N.W. 75 TH AVE.
MIAMI, FL. 33122
TEL. (305) 592-1515 FAX. (305) 592-2184

revisions:

no	date	by	description
A	11.24.10		REV. PER BCCO COMMENTS
B	03.05.12		UPDATED TO 2010 FBC

date: 12-30-09
scale: 1/2"=1'-0"
dr. by: HAMID
chk. by:

drawing no.
W09-64

GLASS LOAD CAPACITY - PSF			
NOMINAL DIMS.		GLASS TYPE 'A'	GLASS TYPE 'B'
D.L.O. WIDTH	D.L.O. HEIGHT	EXT. (+) INT. (-)	EXT. (+) INT. (-)
25"	67"	107.0	126.0
31"		107.0	126.0
37"		107.0	126.0
43"		107.0	126.0
49"		107.0	126.0
55"		107.0	126.0
61"		107.0	-
67"		107.0	-
25"	73"	107.0	126.0
31"		107.0	126.0
37"		107.0	126.0
43"		107.0	126.0
49"		107.0	126.0
55"		107.0	126.0
61"		107.0	-
67"		107.0	-
25"	79"	107.0	126.0
31"		107.0	126.0
37"		107.0	126.0
43"		107.0	126.0
49"		107.0	126.0
55"		107.0	-
61"		107.0	-
67"		70.0	-
25"	85"	107.0	126.0
31"		107.0	126.0
37"		107.0	126.0
43"		107.0	126.0
49"		107.0	126.0
55"		107.0	-
61"		70.0	-
67"		70.0	-
25"	91"	107.0	126.0
31"		107.0	126.0
37"		107.0	126.0
43"		107.0	126.0
49"		107.0	-
55"		70.0	-
61"		70.0	-
67"		70.0	-
25"	97"	107.0	126.0
31"		107.0	126.0
37"		107.0	126.0
43"		107.0	126.0
49"		107.0	-
55"		70.0	-
61"		70.0	-
67"		70.0	-

GLASS LOAD CAPACITY - PSF			
NOMINAL DIMS.		GLASS TYPE 'A'	GLASS TYPE 'B'
D.L.O. WIDTH	D.L.O. HEIGHT	EXT. (+) INT. (-)	EXT. (+) INT. (-)
25"	103"	107.0	126.0
31"		107.0	126.0
37"		107.0	126.0
43"		107.0	-
49"		70.0	-
55"		70.0	-
61"		70.0	-
25"	109"	107.0	126.0
31"		107.0	126.0
37"		107.0	126.0
43"		107.0	-
49"		70.0	-
55"		70.0	-
25"	115"	107.0	126.0
31"		107.0	126.0
37"		107.0	-
43"		70.0	-
49"		70.0	-
55"		70.0	-
25"	121"	107.0	126.0
31"		107.0	126.0
25"	127"	107.0	126.0
31"		107.0	126.0
25"	130"	107.0	126.0
31"		107.0	126.0

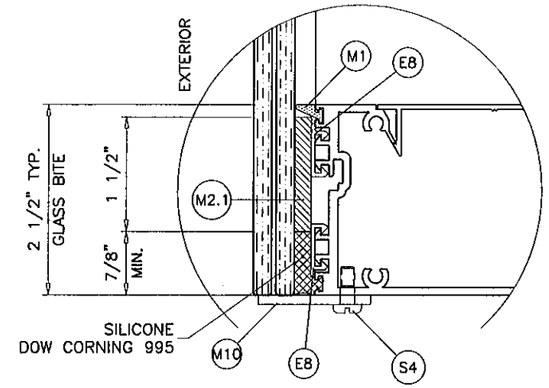

ALTERNATE GLAZING DETAIL

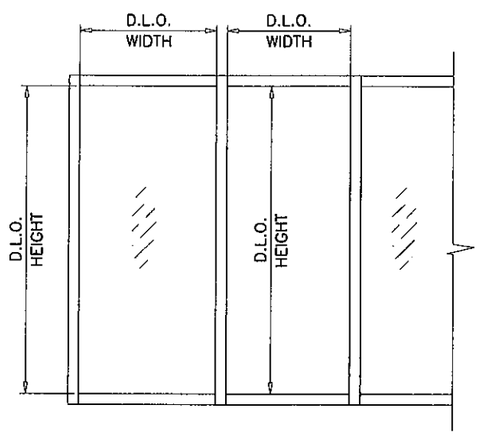

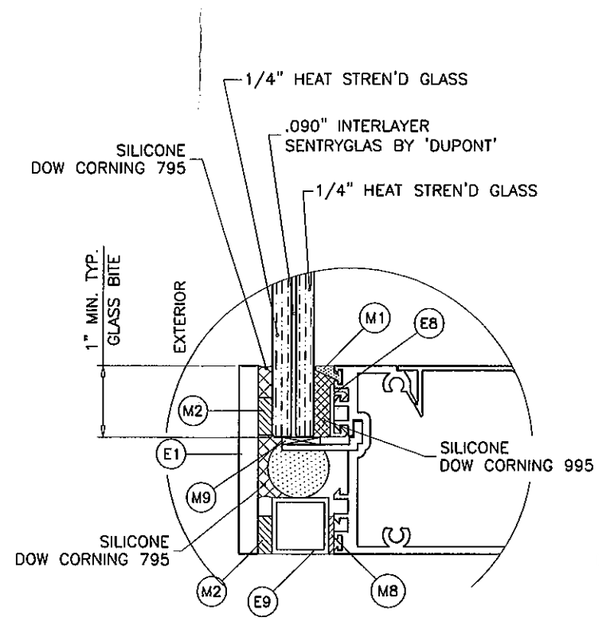

GLASS TYPE 'A'
9/16" LAM. GLASS

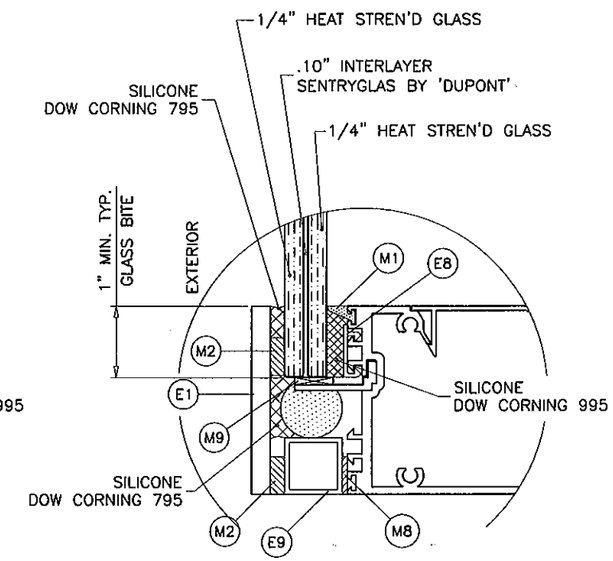

GLASS TYPE 'B'
9/16" LAM. GLASS

GLAZING OPTIONS

NOTE:
GLASS CAPACITIES ON THIS SHEET ARE BASED ON ASTM E1300-04 (3 SEC. GUSTS).

PRODUCT REVISED
as complying with the Florida
Building Code
Acceptance No 12-0330.13
Expiration Date 12/30/2015
By
Miami Dade Product Control

Engr: JAVAD AHMAD
CIVIL
FLA. PE # 70592
C.A.N. 3538

MAR 09 2012

AL-FAROOQ CORPORATION
ENGINEERS & PRODUCT DEVELOPMENT
1235 S.W. 87 AVE
MIAMI, FLORIDA 33174
TEL. (305) 264-8100 FAX. (305) 262-6978

STORE\W09-64RC

S-5250 ALUM. WINDOW WALL SYSTEM (L.M.I.)

R.C. ALUMINUM INDUSTRIES INC.
2805 N.W. 75 TH AVE.
MIAMI, FL. 33122
TEL. (305) 592-1515 FAX. (305) 592-2184

revisions:

no	date	by	description
A	11.24.10		REV. PER BCCO COMMENTS
B	03.05.12		UPDATED TO 2010 FBC

date: 12-30-09
scale: -
dr. by: HAMID
chk. by:

drawing no.
W09-64

sheet 2 of 8

MULLION LOAD CAPACITY – PSF				
NOMINAL DIMS.		REINF. OPTION #1 JAMB 'J1' MULLION 'M2'	REINF. OPTION #2 JAMB 'J2' MULLION 'M1'	REINF. OPTION #3 JAMB 'J3' MULLION 'M3'
WIDTH (W)	FRAME HEIGHT	EXT. (+) INT. (–)	EXT. (+) INT. (–)	EXT. (+) INT. (–)
30"	72"	107.0	75.0	126.0
36"		107.0	75.0	126.0
42"		107.0	75.0	126.0
48"		107.0	75.0	126.0
54"		107.0	75.0	126.0
60"		107.0	75.0	126.0
66"		107.0	75.0	126.0
72"		107.0	–	–
30"	78"	107.0	75.0	126.0
36"		107.0	75.0	126.0
42"		107.0	75.0	126.0
48"		107.0	75.0	126.0
54"		107.0	75.0	126.0
60"		107.0	75.0	126.0
66"		107.0	–	–
72"		107.0	–	–
30"	84"	107.0	75.0	126.0
36"		107.0	75.0	126.0
42"		107.0	75.0	126.0
48"		107.0	75.0	126.0
54"		107.0	75.0	126.0
60"		107.0	–	–
66"		107.0	–	–
72"		70.0	–	–
30"	90"	107.0	75.0	126.0
36"		107.0	75.0	126.0
42"		107.0	75.0	126.0
48"		107.0	75.0	126.0
54"		107.0	75.0	126.0
60"		107.0	–	–
66"		70.0	–	–
72"		70.0	–	–
30"	96"	107.0	75.0	126.0
36"		107.0	75.0	126.0
42"		107.0	75.0	126.0
48"		107.0	75.0	126.0
54"		107.0	–	–
60"		107.0	–	–
66"		70.0	–	–
72"		70.0	–	–
30"	102"	107.0	75.0	126.0
36"		107.0	75.0	126.0
42"		107.0	75.0	126.0
48"		107.0	75.0	126.0
54"		107.0	–	–
60"		70.0	–	–
66"		70.0	–	–
72"		70.0	–	–

MULLION LOAD CAPACITY – PSF				
NOMINAL DIMS.		REINF. OPTION #1 JAMB 'J1' MULLION 'M2'	REINF. OPTION #2 JAMB 'J2' MULLION 'M1'	REINF. OPTION #3 JAMB 'J3' MULLION 'M3'
WIDTH (W)	FRAME HEIGHT	EXT. (+) INT. (–)	EXT. (+) INT. (–)	EXT. (+) INT. (–)
30"	108"	107.0	75.0	126.0
36"		107.0	75.0	126.0
42"		107.0	75.0	126.0
48"		107.0	–	–
54"		70.0	–	–
60"		70.0	–	–
66"		70.0	–	–
30"	114"	107.0	75.0	126.0
36"		107.0	75.0	126.0
42"		107.0	75.0	126.0
48"		107.0	–	–
54"		70.0	–	–
60"		70.0	–	–
30"	120"	107.0	75.0	126.0
36"		107.0	75.0	126.0
42"		107.0	–	–
48"		106.1	–	–
54"		70.0	–	–
60"		70.0	–	–
30"	126"	–	75.0	126.0
36"		–	75.0	126.0
30"	132"	–	75.0	126.0
36"		–	75.0	126.0
30"	135"	–	75.0	126.0
36"		–	75.0	126.0

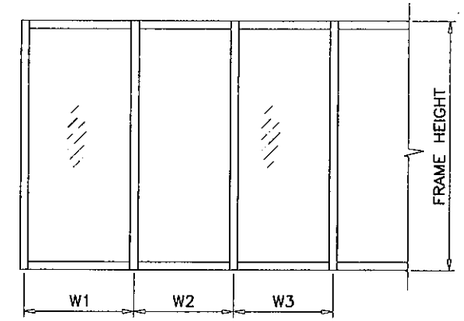

WIDTH (W) = W1
AT FRAME JAMB

WIDTH (W) = $\frac{W2 + W3}{2}$
AT FRAME MULLION

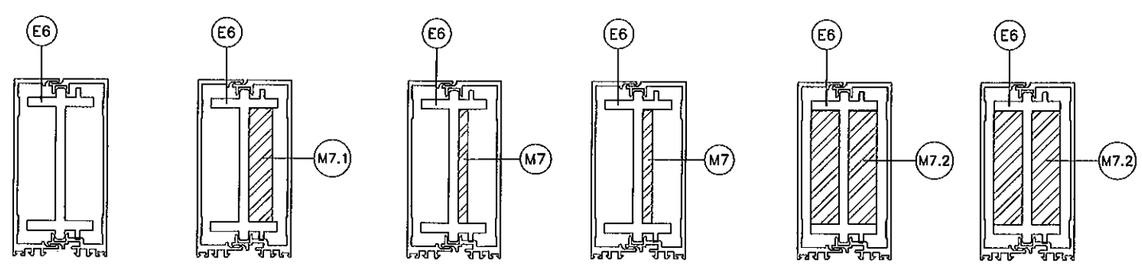

REINF. OPTION '1' REINF. OPTION '2' REINF. OPTION '3'

REINF. LENGTHS = FRAME HEIGHT – 24"

PRODUCT REVISED
as complying with the Florida
Building Code
Acceptance No 12-0330.13
Expiration Date 12/30/2015
By
Miami Dade Product Control

Engr: JAVAD AHMAD
CIVIL
FLA. PE # 70592
C.A.N. 3538

MAR 09 2012

AL-FAROOQ CORPORATION
ENGINEERS & PRODUCT DEVELOPMENT
1235 S.W. 87 AVE
MIAMI, FLORIDA 33174
TEL. (305) 264-8100 FAX. (305) 262-6978
STORE\W09-64RC

S-5250 ALUM. WINDOW WALL SYSTEM (L.M.I.)

R.C. ALUMINUM INDUSTRIES INC.
2805 N.W. 75 TH AVE.
MIAMI, FL. 33122
TEL. (305) 592-1515 FAX. (305) 592-2184

revisions:

no	date	by	description
A	11.24.10		NO CHANGE THIS SHEET
B	03.05.12		NO CHANGE THIS SHEET

date: 12-30-09
scale: –
dr. by: HAMID
chk. by:

drawing no. W09-64

ANCHORS:

TYPE 'A'– 1/4" DIA. KWIK-CON II BY 'HILTI' (Fu=163 KSI, Fy=157 KSI)
DIRECTLY INTO CONCRETE (3000 PSI MIN.)
1-3/4" MIN. EMBED INTO CONC.
2-1/2" MIN. EDGE DISTANCE
3" MIN. CL TO CL SPACING

TYPE 'B'– 1/4" DIA. DRIL-FLEX SELF DRILLING SCREWS (Fu=92 KSI, Fy=120 KSI)
INTO METAL STRUCTURES (STEEL 1/4" MIN. THK.)
3/4" MIN. EDGE DISTANCE
1" MIN. CL TO CL SPACING

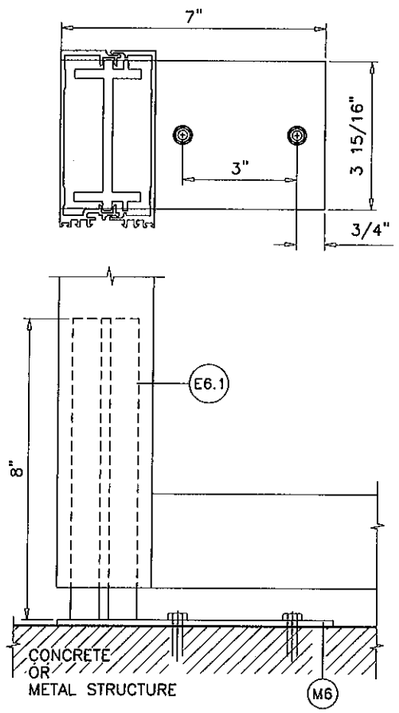

DETAIL '1'
AT JAMB

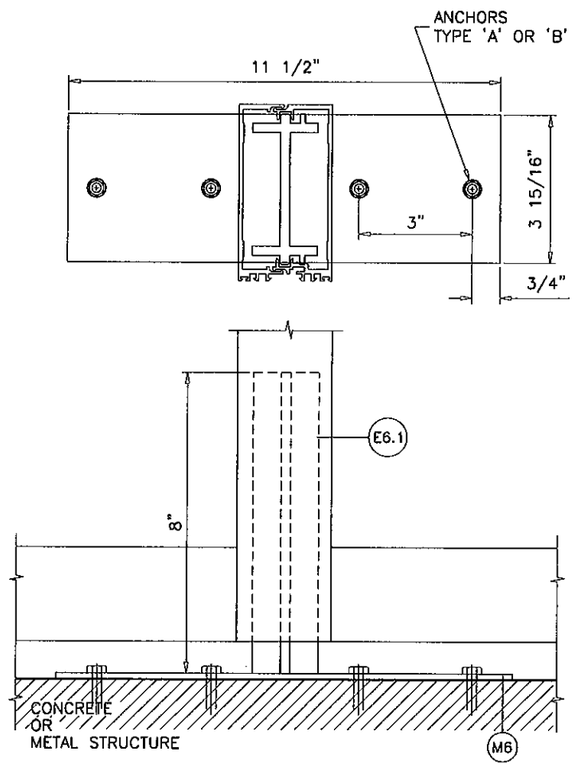

DETAIL '2'
AT MULLION

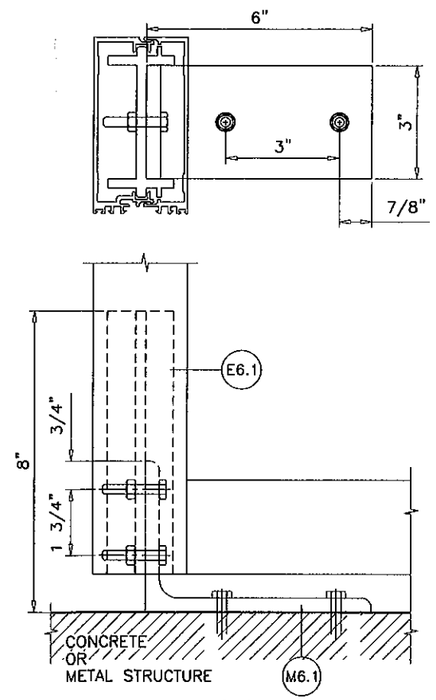

ALT. DETAIL '1'
AT JAMB

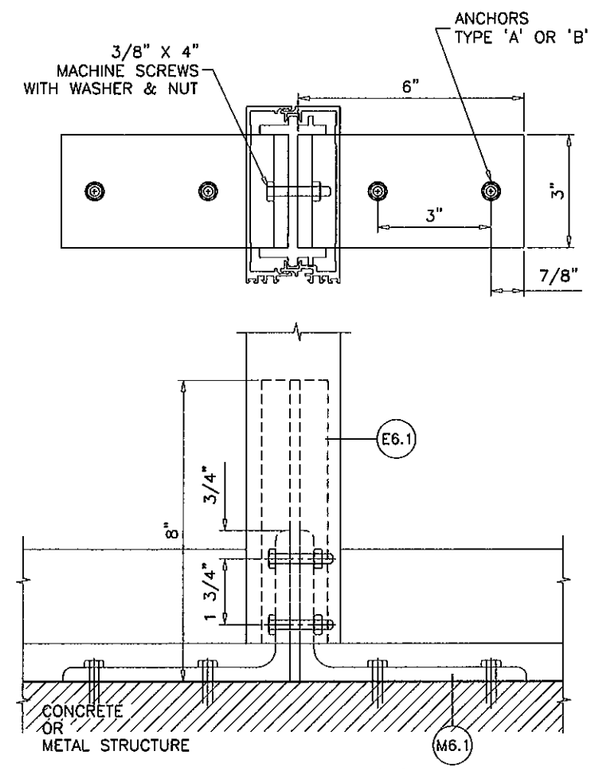

ALT. DETAIL '2'
AT MULLION

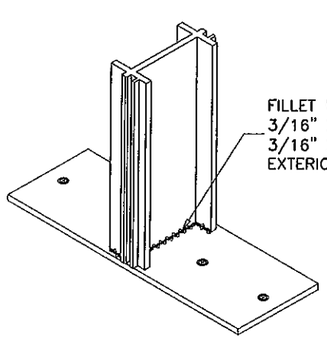

FILLET WELDS (ER4043 ALLOY)
3/16" X 3" AT BOTH SIDES OF WEB
3/16" X 3/4" AT INTERIOR OR
EXTERIOR SIDE OF FLANGE

PRODUCT REVISED
as complying with the Florida
Building Code
Acceptance No 12-0330.13
Expiration Date 12/30/2015
By
Miami Dade Product Control

Engr: JAVAD AHMAD
CIVIL
FLA. PE # 70592
C.A.N. 3538

MAR 09 2012

AL-FAROOQ CORPORATION
ENGINEERS & PRODUCT DEVELOPMENT
1235 S.W. 87 AVE
MIAMI, FLORIDA 33174
TEL. (305) 264-8100 FAX. (305) 262-6978
STORE\W09-64RC

S-5250 ALUM. WINDOW WALL SYSTEM (L.M.I.)

R.C. ALUMINUM INDUSTRIES INC.
2805 N.W. 75 TH AVE.
MIAMI, FL. 33122
TEL. (305) 592-1515 FAX. (305) 592-2184

revisions:

no	date	by	description
A	11.24.10		REV. PER BCCO COMMENTS
B	03.05.12		NO CHANGE THIS SHEET

date: 12-30-09
scale: –
dr. by: HAMID
chk. by:

drawing no.
W09-64

sheet 4 of 8

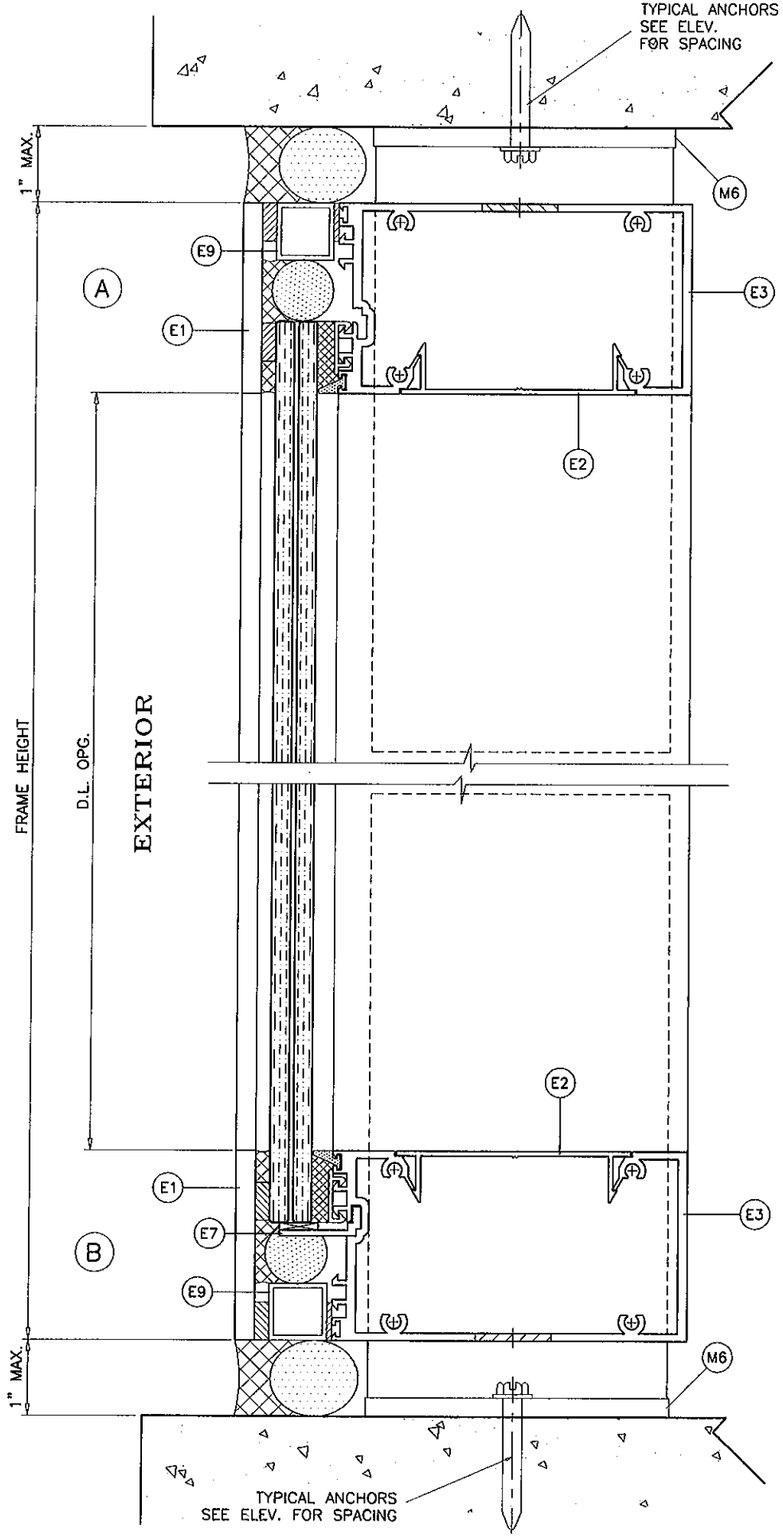

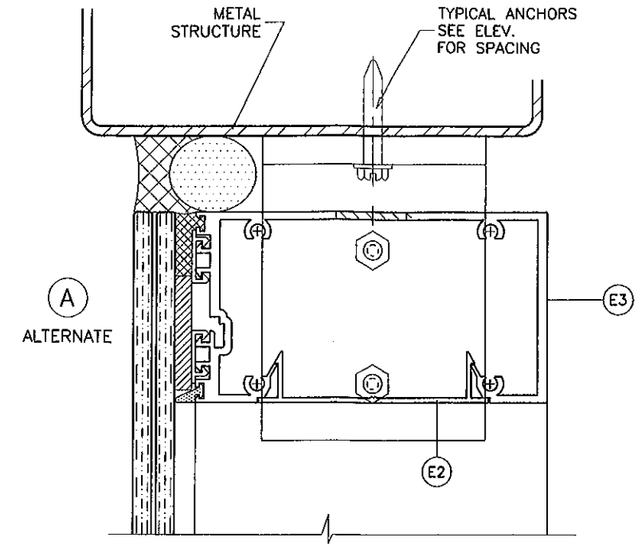

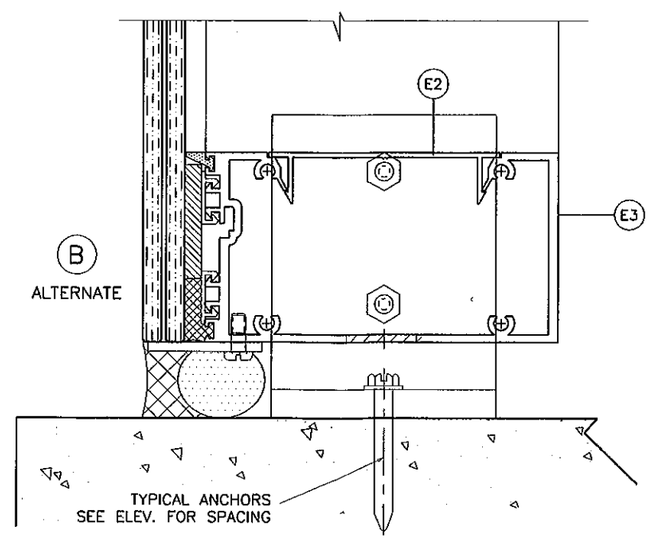

METAL STRUCTURES NOT BY RC ALUMINUM
MUST SUPPORT LOADS IMPOSED BY GLAZING SYSTEM AND TRANSFER THEM TO THE BUILDING STRUCTURE.

SEALANTS:

ALL FRAME CORNERS AND MULLION SEAMS SEALED WITH SILICONE.

PRODUCT REVISED
as complying with the Florida
Building Code 12-0330.13
Acceptance No
Expiration Date 12/30/2015
By
Miami Dade Product Control

Engr: JAVAD AHMAD
CIVIL
FLA. PE # 70592
C.A.N. 3538

MAR 09 2012

AL-FAROOQ CORPORATION
ENGINEERS & PRODUCT DEVELOPMENT
1235 S.W. 87 AVE
MIAMI, FLORIDA 33174
TEL. (305) 264-8100 FAX. (305) 262-6978

STORE\W09-64RC

S-5250 ALUM. WINDOW WALL SYSTEM (L.M.I.)

R.C. ALUMINUM INDUSTRIES INC.
2805 N.W. 75 TH AVE.
MIAMI, FL. 33122
TEL. (305) 592-1515 FAX. (305) 592-2184

revisions:

no	date	by	description
A	11.24.10		NO CHANGE THIS SHEET
B	03.05.12		NO CHANGE THIS SHEET

date: 12-30-09
scale: 1/2" = 1"
dr. by: HAMID
chk. by:

drawing no.
W09-64

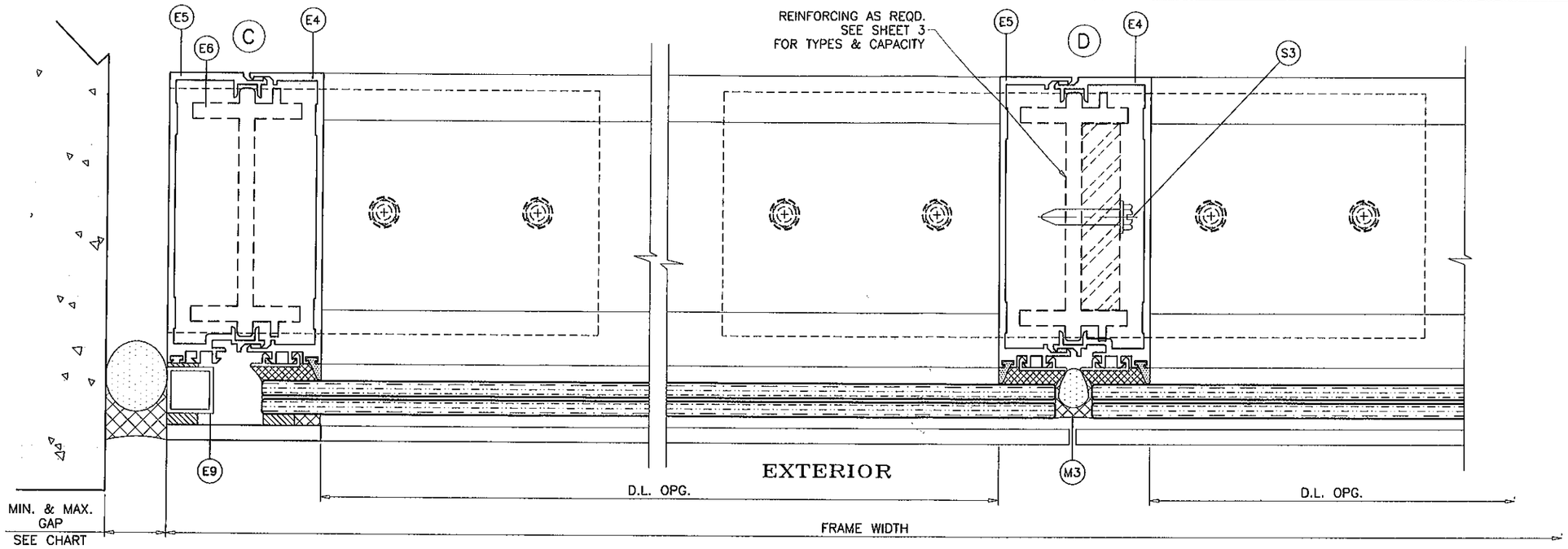

USE ALUMINUM OR STEEL REINFORCEMENTS AS REQD.
SEE SHEET 3 FOR REINFORCING DETAILS AND DESIGN
LOAD CAPACITY.

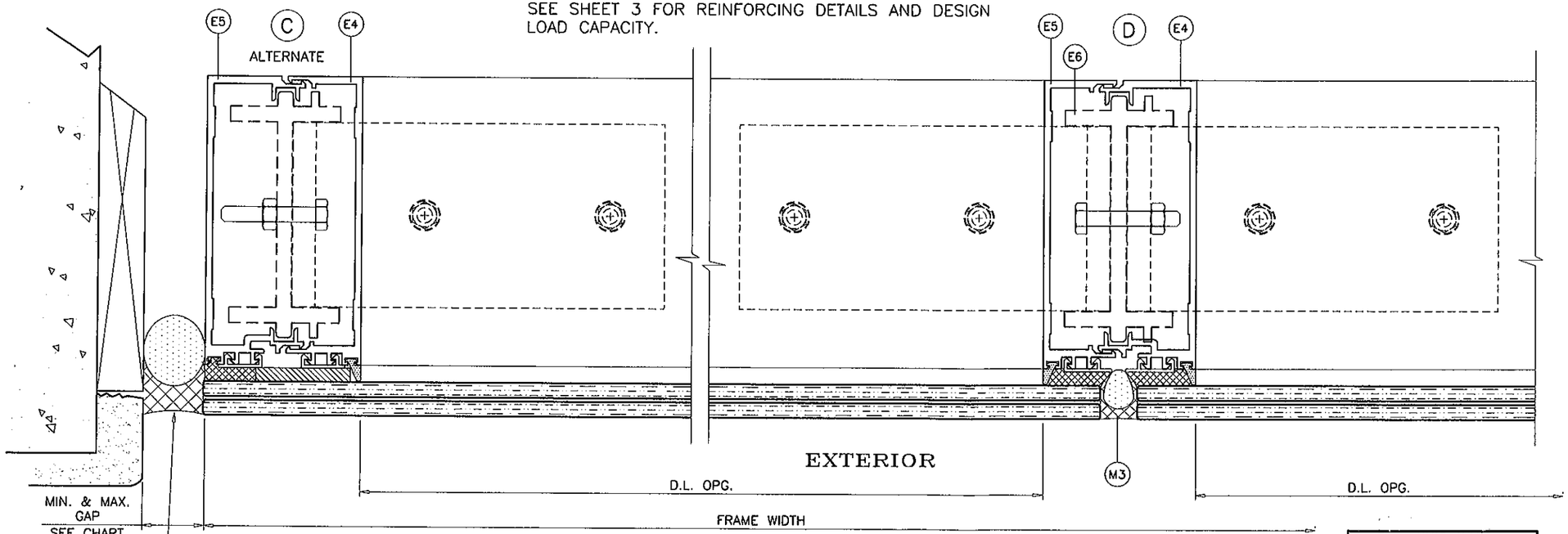

MAX. FRAME HEIGHT	GAP	
	MIN.	MAX.
84"	1/4"	1"
120"	3/8"	1"
135"	1/2"	1"

PRODUCT REVISED
as complying with the Florida
Building Code 12-0330.13
Acceptance No
Expiration Date 12/30/2015
By
Miami Dade Product Control

Engr: JAVAD AHMAD
CIVIL
FLA. PE # 70592
C.A.N: 3538

MAR 09 2012

AL-FAROOQ CORPORATION
ENGINEERS & PRODUCT DEVELOPMENT
1235 S.W. 87 AVE
MIAMI, FLORIDA 33174
TEL. (305) 264-8100 FAX. (305) 262-6978
STORE\W09-64RC

S-5250 ALUM. WINDOW WALL SYSTEM (L.M.I.)

R.C. ALUMINUM INDUSTRIES INC.
2805 N.W. 75 TH AVE.
MIAMI, FL. 33122
TEL (305) 592-1515 FAX. (305) 592-2184

revisions:

no	date	by	description
A	11.24.10		REV. PER BCCO COMMENTS
B	03.05.12		NO CHANGE THIS SHEET

date: 12-30-09
scale: 1/2" = 1"
dr. by: HAMID
chk. by:

drawing no.
W09-64

sheet 6 of 8

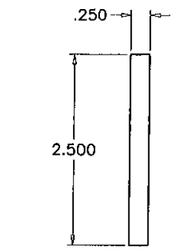

E1 COVER HEAD/SILL/JAMB

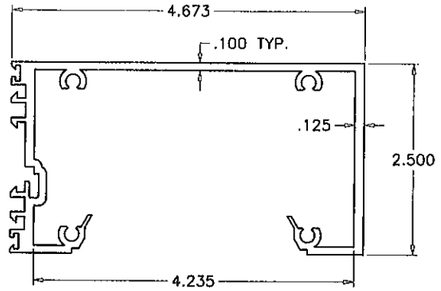

E3 HORIZONTAL HEAD/SILL

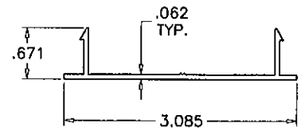

E2 INTERIOR SNAP COVER

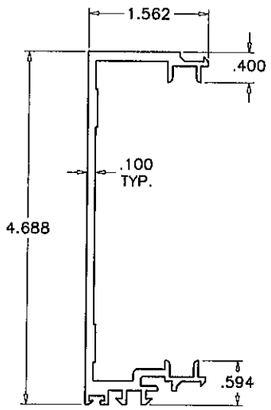

E5 MALE MULLION

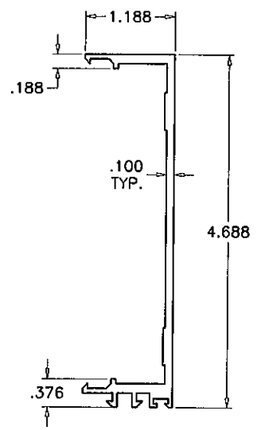

E4 FEMALE MULLION

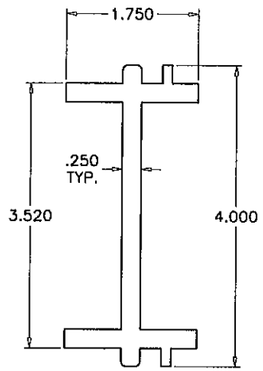

E6 SPLICE REINF/ANCHOR

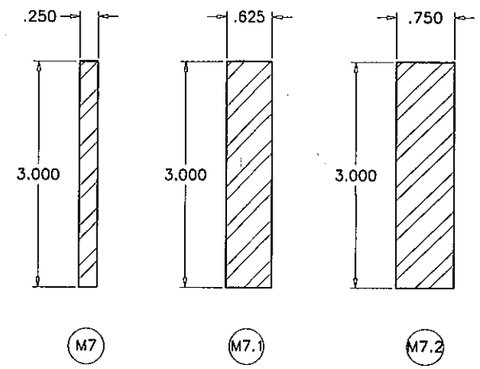

REINFORCING BAR

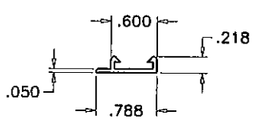

E8 INSERT BASE

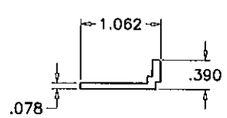

E7 SETTING PIECE

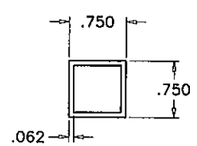

E9 FILLER TUBE

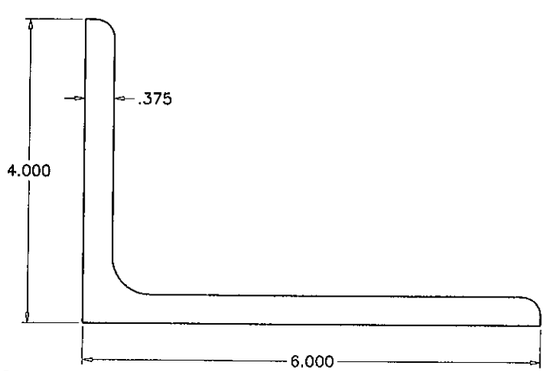

M6.1 ANCHOR ANGLE

PRODUCT REVISED
as complying with the Florida
Building Code
Acceptance No 12-0330.13
Expiration Date 12/30/2015
By
Miami Dade Product Control

Engr: JAVAD AHMAD
CIVIL
FLA. PE # 70592
C.A.N. 3538

MAR 09 2012

AL-FAROOQ CORPORATION
ENGINEERS & PROJECT DEVELOPMENT
1235 S.W. 87 AVE
MIAMI, FLORIDA 33174
TEL. (305) 264-8100 FAX. (305) 262-6978

STORE\W09-64RC

S-5250 ALUM. WINDOW WALL SYSTEM (L.M.I.)

R.C. ALUMINUM INDUSTRIES INC.
2805 N.W. 75 TH AVE.
MIAMI, FL. 33122
TEL. (305) 592-1515 FAX. (305) 592-2184

revisions:

no	date	by	description
A	11.24.10		NO CHANGE THIS SHEET
B	03.05.12		NO CHANGE THIS SHEET

date: 12-30-09
scale: 1/2" = 1"
dr. by: HAMID
chk. by:

drawing no.
W09-64

sheet 7 of 8

ITEM NO.	PART NUMBER	QUANTITY	DESCRIPTION	MATERIAL	MANUF./SUPPLIER/REMARKS
E1	CW-5250-007	AS REQD.	2 1/2" X 1/4" ALUMINUM COVER @ HEAD, SILL & JAMBS	6063-T5	FISA
E2	CW-5250-004	AS REQD.	INTERIOR SNAP COVER	6063-T5	FISA
E3	CW-5250-030	AS REQD.	HORIZONTAL HEAD & SILL	6063-T5	FISA
E4	CW-5250-005	AS REQD.	FEMALE MULLION	6063-T6	FISA
E5	CW-5250-006	AS REQD.	MALE MULLION	6063-T6	FISA
E6	CW-5250-035	AS REQD.	REINFORCEMENT SPLICE (LENGTH = FR. HT. - 22 IN.)	6063-T6	FISA
E6.1	CW-5250-035	AS REQD.	ANCHOR SPLICE (8" LONG)	6063-T6	FISA
E7	CW-5250-017	AS REQD.	COVER CLIP (RIP 3/4" FROM FRONT)	6063-T5	FISA
E8	5250-007	AS REQD.	INSERT BASE	6063-T5	-
E9	-	AS REQD.	FILLER TUBE	6063-T5	-
M1	WV-7038 (V-015)	AS REQD.	VINYL BLACK (GLAZING GASKET)	-	DUROMETER 85±5 SHORE A
M2	-	AS REQD.	1/2" X 3/16" DOUBLE FACE TAPE	-	-
M2.1	-	AS REQD.	1-1/2" X 1/4" DOUBLE FACE TAPE	-	-
M3	-	-	DC 795 SILICONE	-	-
M4	-	-	DC 995 STRUCTURAL SILICONE	-	-
M5	-	-	DC 790 SILICONE	-	-
M6	-	AS REQD.	3 15/16" X 1/4" THK. ALUMINUM ANCHOR PLATE	6063-T6	-
M6.1	-	AS REQD.	ANCHOR ANGLE	6061-T6	-
M7	-	AS REQD.	1/4" THK. X 3" REINFORCEMENT BAR (LENGTH = FR. HT. - 24")	STEEL	ASTM A36, Fy 36 KSI
M7.1	-	AS REQD.	5/8" THK. X 3" REINFORCEMENT BAR (LENGTH = FR. HT. - 24")	STEEL	ASTM A36, Fy 36 KSI
M7.2	-	AS REQD.	3/4" THK. X 3" REINFORCEMENT BAR (LENGTH = FR. HT. - 24")	STEEL	ASTM A36, Fy 36 KSI
M8	-	AS REQD.	1/16" X 1/2" SINGLE FACE TAPE	-	-
M9	-	2/ LITE	1/8" X 1/2" X 4" LONG SETTING BLOCK	NEOPRENE	DUROMETER 85±5 SHORE A
M10	-	-	1/8" X 1-1/2" X 4" LONG PLATE AT 1/4 POINTS	6063-T5	-
S2	-	4/ CORNER	#12 X 1 1/4" LG. HX. HD. SMS ASSEMBLY	ST/ST	-
S3	-	AS REQD.	#14 X 1 1/4" LG. HX. HD. SMS	ST/ST	AT 9" FROM ENDS AND AT MIDSPAN
S4	-	2/ PLATE	#10 X 3/4" LG. PH. HD. SMS	ST/ST	AT 3" O.C.

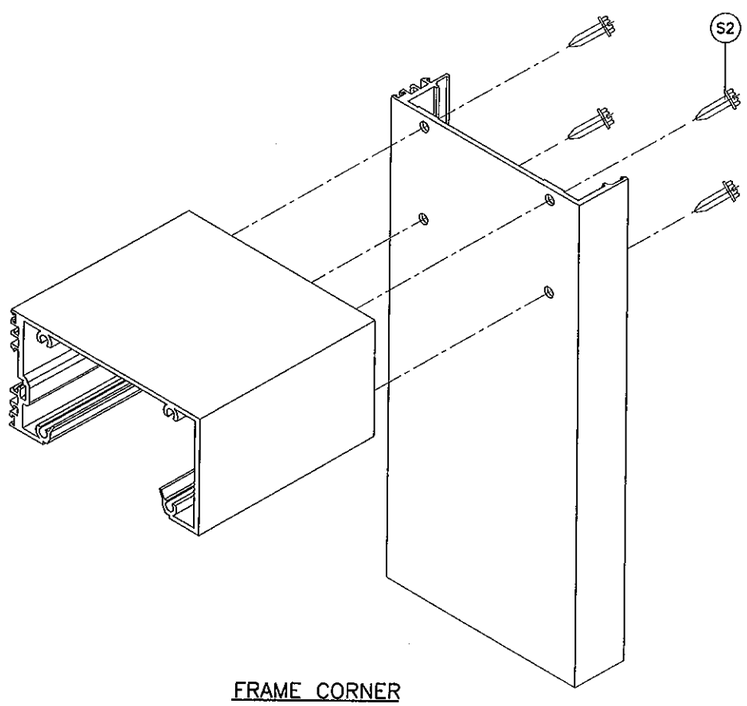

FRAME CORNER

PRODUCT REVISED
as complying with the Florida
Building Code
Acceptance No 12-0330.13
Expiration Date 12/30/2015
By
Miami Dade Product Control

Engr: JAVAD AHMAD
CIVIL
FLA. PE # 70592
C.A.N: 3538

MAR 09 2012

AL-FAROOQ CORPORATION
ENGINEERS & PRODUCT DEVELOPMENT
1235 S.W. 87 AVE
MIAMI, FLORIDA 33174
TEL. (305) 264-8100 FAX. (305) 262-6978
STORE\W09-64RC

S-5250 ALUM. WINDOW WALL SYSTEM (L.M.I.)

R.C. ALUMINUM INDUSTRIES INC.
2805 N.W. 75 TH AVE.
MIAMI, FL. 33122
TEL. (305) 592-1515 FAX. (305) 592-2184

revisions:

no	date	by	description
A	11.24.10		REV. PER BCCO COMMENTS
B	03.05.12		NO CHANGE THIS SHEET

date: 12-30-09
scale: 1/2" = 1"
dr. by: HAMID
chk. by:

drawing no. W09-64

sheet 8 of 8