MIAMI-DADE COUNTY
DEPARTMENT OF PERMITTING, ENVIRONMENT, AND REGULATORY AFFAIRS (PERA)
BOARD AND CODE ADMINISTRATION DIVISION

MIAMI-DADE COUNTY
PRODUCT CONTROL SECTION
11805 SW 26 Street, Room 208
Miami, Florida 33175-2474
T (786) 315-2590 F (786) 315-2599
www.miamidade.gov/pera

NOTICE OF ACCEPTANCE (NOA)

Hartman Windows and Doors, LLC
531 Southern Blvd
West Palm Beach, FL 33405

SCOPE:

This NOA is being issued under the applicable rules and regulations governing the use of construction materials. The documentation submitted has been reviewed and accepted by Miami-Dade County PERA - Product Control Section to be used in Miami Dade County and other areas where allowed by the Authority Having Jurisdiction (AHJ).

This NOA shall not be valid after the expiration date stated below. The Miami-Dade County Product Control Section (In Miami Dade County) and/or the AHJ (in areas other than Miami Dade County) reserve the right to have this product or material tested for quality assurance purposes. If this product or material fails to perform in the accepted manner, the manufacturer will incur the expense of such testing and the AHJ may immediately revoke, modify, or suspend the use of such product or material within their jurisdiction. PERA reserves the right to revoke this acceptance, if it is determined by Miami-Dade County Product Control Section that this product or material fails to meet the requirements of the applicable building code.

This product is approved as described herein, and has been designed to comply with the Florida Building Code, including the High Velocity Hurricane Zone.

DESCRIPTION: Series "American Style Clipped/Unclipped" Steel Reinforced Wood Mullion – L.M.I.

APPROVAL DOCUMENT: Drawing No. **M08-03**, titled "Clipped/ Unclipped" Wood & Steel Mullion", sheets 1 through 10 of 10, dated 06/27/08, with revision C dated 02/20/12, prepared by Al-Farooq Corporation, signed and sealed by Javad Ahmad, P.E., bearing the Miami-Dade County Product Control Revision stamp with the Notice of Acceptance number and expiration date by the Miami-Dade County Product Control Section.

MISSILE IMPACT RATING: Large and Small Missile Impact Resistant

LABELING: Each unit shall bear a permanent label with the manufacturer's name or logo, city, state, series, and following statement: "Miami-Dade County Product Control Approved", unless otherwise noted herein.

RENEWAL of this NOA shall be considered after a renewal application has been filed and there has been no change in the applicable building code negatively affecting the performance of this product.

TERMINATION of this NOA will occur after the expiration date or if there has been a revision or change in the materials, use, and/or manufacture of the product or process. Misuse of this NOA as an endorsement of any product, for sales, advertising or any other purposes shall automatically terminate this NOA. Failure to comply with any section of this NOA shall be cause for termination and removal of NOA.

ADVERTISEMENT: The NOA number preceded by the words Miami-Dade County, Florida, and followed by the expiration date may be displayed in advertising literature. If any portion of the NOA is displayed, then it shall be done in its entirety.

INSPECTION: A copy of this entire NOA shall be provided to the user by the manufacturer or its distributors and shall be available for inspection at the job site at the request of the Building Official.

This NOA **revises NOA # 08-1008.06** and consists of this page 1 and evidence page E-1, as well as approval document mentioned above.

The submitted documentation was reviewed by **Jaime D. Gascon, P.E.**

MIAMI-DADE COUNTY APPROVED

J. Gascon
6/5/12

NOTICE OF ACCEPTANCE: EVIDENCE SUBMITTED

A. DRAWINGS

1. Manufacturer's die drawings and sections.
   (Submitted under previous NOA #08-1008.06)
2. Drawing No. **M08-03**, titled "Clipped/ Unclipped" Wood & Steel Mullion", sheets 1 through 10 of 10, dated 06/27/08, with revision C dated 02/20/12, prepared by Al-Farooq Corporation, signed and sealed by Javad Ahmad, P.E.

B. TESTS

1. Test reports on: 1) Air Infiltration Test, per FBC, TAS 202-94
   2) Uniform Static Air Pressure Test, Loading per FBC TAS 202-94
   3) Water Resistance Test, per FBC, TAS 202-94
   4) Large Missile Impact Test per FBC, TAS 201-94
   5) Cyclic Wind Pressure Loading per FBC, TAS 203-94
   6) Forced Entry Test, per FBC 2411 3.2.1, TAS 202-94

   along with marked-up drawings and installation diagram, prepared by Hurricane Test Laboratory, LLC, Test Report No. **HTL-0137-0328-05**, dated 09/13/06, signed and sealed by Vinu J. Abraham, P.E.
   (Submitted under previous NOA #08-1008.06)

C. CALCULATIONS:

1. Anchor verification calculations and structural analysis, complying with FBC-2010, prepared by Al-Farooq Corporation, dated 03/07/12, signed and sealed by Javad Ahmad, P.E.

D. QUALITY ASSURANCE

1. Miami-Dade Department of Permitting, Environment, and Regulatory Affairs (PERA)

E. MATERIAL CERTIFICATIONS

1. None.

F. STATEMENTS

1. Statement letter of conformance, complying with FBC-2010, and no financial interest, dated 02/13/12, signed and sealed by Javad Ahmad, P.E.
2. Laboratory compliance letter for Test Report No. **HTL-0137-0328-05**, issued by Hurricane Test Laboratory, Inc., dated 09/05/06, signed and sealed by Vinu J. Abraham, P.E. ***(Submitted under previous NOA #08-1008.06)***

G. OTHERS

1. Notice of Acceptance No. **08-1008.06**, issued to Hartman Windows and Doors, LLC for their **Series "American Style Clipped/Unclipped" Steel Reinforced Wood Mullion–L.M.I.**, approved on 06/24/09 and expiring on 06/24/14.

Jaime D. Gascon, P.E.
Product Control Section Supervisor
NOA No. 12-0403.04
Expiration Date: June 24, 2014
Approval Date: June 14, 2012

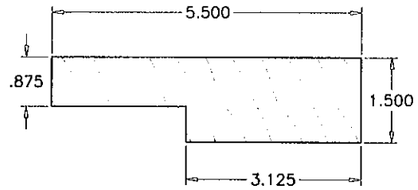

OUT-SWING DOOR
FRAME HEAD/JAMB
OPERATING DOOR
FIX. DOOR
SIDELITE UNIT

1

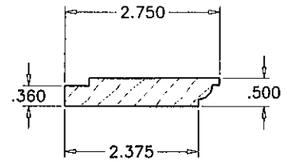

2 OUT-SWING DOOR
DOOR STOP

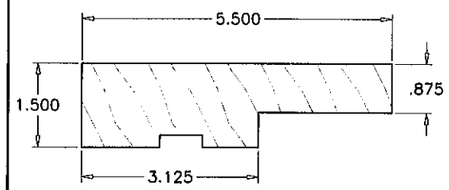

IN-SWING DOOR
FRAME HEAD/JAMB
OPERATING DOOR
FIX. DOOR
SIDELITE UNIT

3

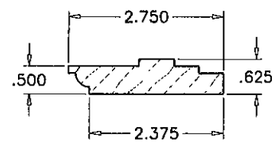

4 IN-SWING DOOR
DOOR STOP

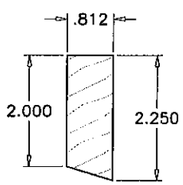

5 EXTERIOR GLASS STOP

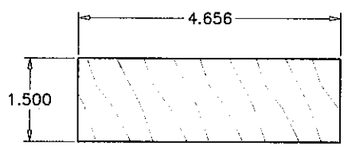

6 TRANSOM WINDOW

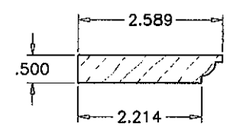

7 INTERIOR TRIM

ITEM #	PART #	REQD.	DESCRIPTION	MATERIAL	MANF./SUPPLIER/REMARKS
1	–	AS REQD.	OUTSWING DOOR FRAME HEAD/JAMB (OPERATING DOOR, FIX. DOOR)	WOOD	MAHOGANY
2	–	AS REQD.	OUTSWING DOOR INTERIOR STOP	WOOD	MAHOGANY
3	–	AS REQD.	INSWING DOOR FRAME HEAD/JAMB (OPERATING DOOR, FIX. DOOR)	WOOD	MAHOGANY
4	–	AS REQD.	INSWING DOOR EXTERIOR STOP	WOOD	MAHOGANY
5	–	AS REQD.	TRANSOM EXT. GLASS STOP	WOOD	MAHOGANY
6	–	AS REQD.	TRANSOM FRAME (HEAD/SILL/JAMB)	WOOD	MAHOGANY
7	–	AS REQD.	TRANSOM INTERIOR TRIM	WOOD	MAHOGANY
8	–	AS REQD.	3" MULLION	STEEL	–
9	–	AS REQD.	4" MULLION	STEEL	–
10	–	AS REQD.	5" MULLION	STEEL	–

TYPICAL WOOD–HONDURES MAHOGANY LUMBER
SPECIFIC GRAVITY = 0.45 MIN.
GRADE = 2 MIN.
MOISTURE CONTENT = 19% MAX.

MULLION SYSTEM IS RATED FOR LARGE MISSILE IMPACT.

CLIPPED/UNCLIPPED WOOD & STEEL MULLION SYSTEM WINDOW/DOOR FRAME MEMBERS INCLUDED IN PROPERTIES

DESIGN LOAD RATING FOR THIS MULLION TO BE AS PER CHARTS SHOWN ON SHEETS 2 THRU 7.

APPROVAL APPLIES TO MULLIONS COMBINATIONS WITH FRAME MEMBERS OF SERIES AMERICAN TRANSOMS, SIDELITES AND DOORS IN ANY COMBINATIONS.

SEE HARTMAN WINDOWS SEPARATE NOA FOR WINDOW/DOOR ANCHORS AND DESIGN LOAD CAPACITY.

LOWEST VALUE RESULTING FROM MULLION, WINDOW OR DOOR APPROVAL WILL APPLY TO ENTIRE SYSTEM.

THIS PRODUCT HAS BEEN DESIGNED AND TESTED TO COMPLY WITH THE REQUIREMENTS OF THE FLORIDA BUILDING CODE INCLUDING HIGH VELOCITY HURRICANE ZONE (HVHZ).

ALL GLAZING PRODUCTS USED WITH THESE MULLIONS MUST MEET THE APPLICABLE BUILDING CODE REQUIREMENTS I.E: WIND LOAD, WATER INFILTRATION, FORCED ENTRY RESISTANCE, SAFEGUARDS ETC.

WOOD BUCKS BY OTHERS, MUST BE ANCHORED PROPERLY TO TRANSFER LOADS TO THE STRUCTURE.

ANCHORS SHALL BE AS LISTED, SPACED AS SHOWN ON DETAILS, EMBEDMENT TO BASE MATERIAL SHALL BE BEYOND WALL COVERING (STUCCO, TILE ETC.).

ANCHORING CONDITIONS OTHER THAN THOSE SHOWN IN THESE DETAILS ARE NOT PART OF THIS APPROVAL.

A LOAD DURATION INCREASE IS USED IN DESIGN OF ANCHORS INTO WOOD ONLY.

MATERIALS INCLUDING BUT NOT LIMITED TO STEEL/METAL SCREWS, THAT COME INTO CONTACT WITH OTHER DISSIMILAR MATERIALS SHALL MEET THE REQUIREMENTS OF THE FLORIDA BLDG. CODE SECTION 2003.8.4.

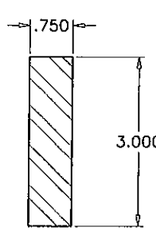

8 3" STEEL MULLION

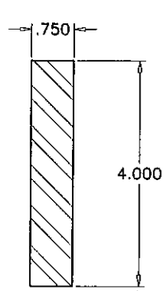

9 4" STEEL MULLION

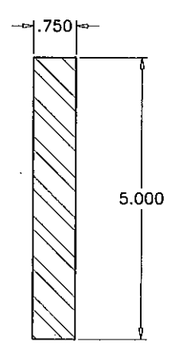

10 5" STEEL MULLION

THE APPROVED PRODUCTS NOTED HEREIN ARE EXEMPT FROM PRESERVATIVE TREATMENT PER 2326.2.1 OF THE FLORIDA BUILDING CODE WHICH EXEMPTS WOOD SPECIES LISTED AS 'DURABLE'.
THE SPECIFIC PRODUCTS HEREIN ARE EXEMPTED HONDURAN MAHOGANY–SWIETENIA MACROPHYLLA OR EQUIVALENT SPECIES BASED ON USDA LISTING AND MUST HAVE A SPECIFIC GRAVITY EQUAL TO OR HIGHER THAT THE REFERENCED SPECIES.

Engr: JAVAD AHMAD
CIVIL
FLA. PE # 70592
C.A.N. 3538

PRODUCT REVISED
as complying with the Florida
Building Code
Acceptance No. 12-0403.04
Expiration Date 6/24/2014
By
Miami Dade Product Control

MAR 07 2012

AL-FAROOQ CORPORATION
ENGINEERS & PRODUCT DEVELOPMENT
1235 S.W. 87 AVE
MIAMI, FLORIDA 33174
TEL (305) 264-8100 FAX. (305) 262-6978
COMP–ANL\M08–03HWD

CLIPPED/UNCLIPPED WOOD & STEEL MULLION

HARTMAN WINDOWS & DOORS, LLC
531 SOUTHERN BLVD.
WEST PALM BEACH, FL 33405
TEL. (561) 296-9600 FAX. (561) 296-9601

revisions:

no	date	by	description
A	02.27.09		REV. PER BCCO COMMENTS
B	05.01.09		NO CHANGE THIS SHEET
C	02.20.12		UPDATED TO 2010 FBC

date: 06–27–08
scale: 3/8" = 1"
dr. by: HAMID
chk. by:

drawing no.
M08–03

DESIGN LOAD CAPACITY - PSF		
NOMINAL DIMS.		MULLION W/O STEEL
WIDTH (W)	MULL SPAN	ANCHORS TYPE 'A'
24"	66"	70.0
30"		70.0
36"		70.0
42"		70.0
48"		70.0
24"	72"	70.0
30"		70.0
36"		70.0
42"		70.0
48"		66.7
24"	78"	70.0
30"		70.0
36"		70.0
42"		70.0
48"		61.5
24"	84"	70.0
30"		70.0
36"		70.0
42"		65.3
48"		57.1
24"	90"	70.0
30"		70.0
36"		70.0
42"		61.0
48"		53.3
24"	96"	70.0
30"		70.0
36"		66.7
42"		57.1
48"		50.0
24"	102"	70.0
30"		70.0
36"		62.6
42"		53.8
48"		47.1
24"	108"	70.0
30"		66.0
36"		55.6
42"		48.3
48"		42.9
24"	114"	70.0
30"		59.1
36"		49.7
42"		43.1
48"		38.3
24"	120"	63.9
30"		51.6
36"		43.5
42"		37.7
48"		33.5

SEE SHEET 8 FOR ANCHORS TYPE 'A'.

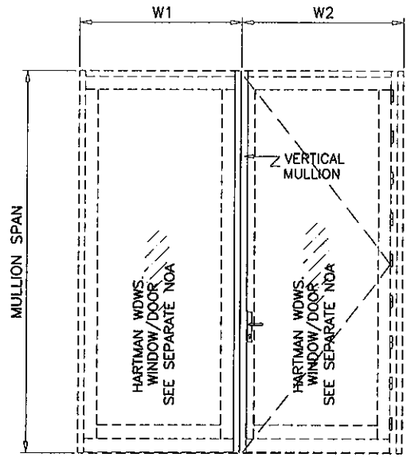

$$\text{WIDTH (W)} = \frac{W1 + W2}{2}$$

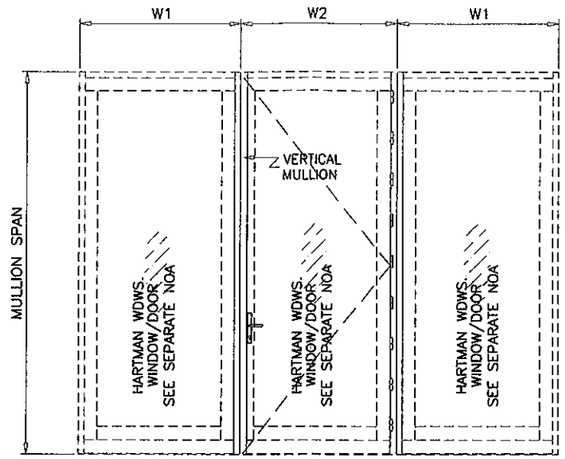

$$\text{WIDTH (W)} = \frac{W1 + W2}{2}$$

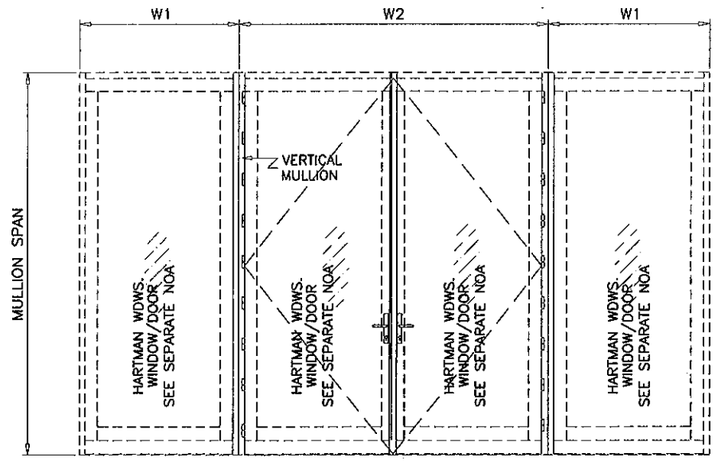

$$\text{WIDTH (W)} = \frac{W1}{2} + \frac{W2}{4}$$

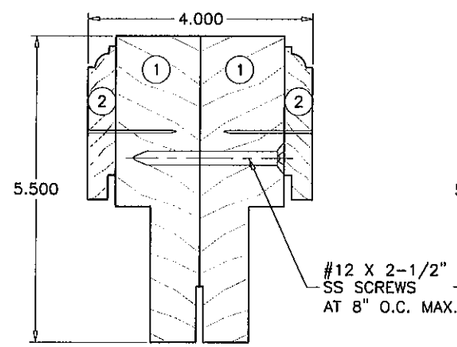

OUT-SWING TO OUT-SWING
VERTICAL JOIN

Ix IN^4	31.746
Sx IN^3	10.171

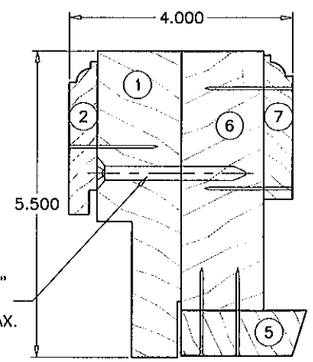

OUT-SWING TO FIXED
VERTICAL JOIN

Ix IN^4	29.176
Sx IN^3	9.378

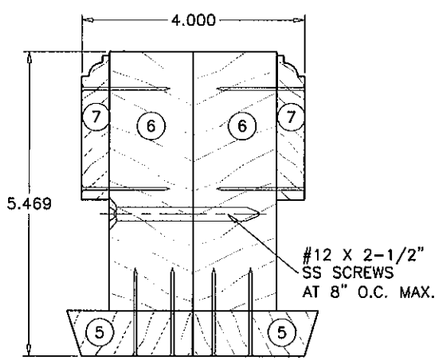

FIXED TO FIXED
VERTICAL JOIN

Ix IN^4	26.544
Sx IN^3	11.400

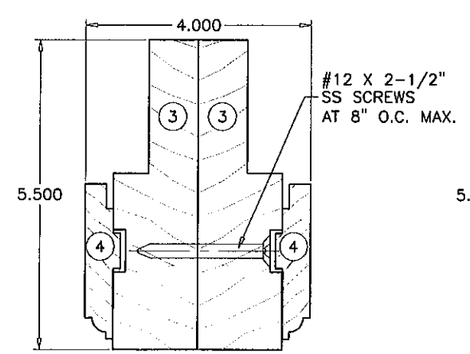

IN-SWING TO IN-SWING
VERTICAL JOIN

Ix IN^4	32.511
Sx IN^3	10.568

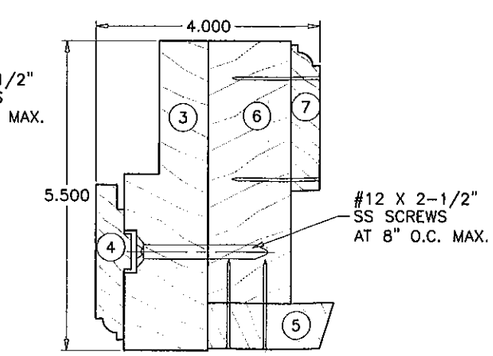

IN-SWING TO FIXED
VERTICAL JOIN

Ix IN^4	29.550
Sx IN^3	9.600

Engr: JAVAD AHMAD
CIVIL
FLA. PE # 70592
C.A.N. 3538

MAR 07 2012

PRODUCT REVISED
as complying with the Florida Building Code
Acceptance No 12-0403.04
Expiration Date 6/24/2014
By
Miami Dade Product Control

AL-FAROOQ CORPORATION
ENGINEERS & PRODUCT DEVELOPMENT
1235 S.W. 87 AVE
MIAMI, FLORIDA 33174
TEL. (305) 264-8100 FAX. (305) 262-6978

COMP-ANL\M08-03HWD

CLIPPED/UNCLIPPED WOOD & STEEL MULLION

HARTMAN WINDOWS & DOORS, LLC
531 SOUTHERN BLVD.
WEST PALM BEACH, FL 33405
TEL. (561) 296-9600 FAX. (561) 296-9601

revisions:

no	date	by	description
A	02.27.09		NO CHANGE THIS SHEET
B	05.01.09		REV. PER BCCO COMMENTS
C	02.20.12		NO CHANGE THIS SHEET

date: 06-27-08
scale: 3/8" = 1"
dr. by: HAMID
chk. by:

drawing no.
M08-03

DESIGN LOAD CAPACITY - PSF							
NOMINAL DIMS.		3" MULLION			4" MULLION		
WIDTH (W)	MULL SPAN	ANCHORS TYPE 'A'	ANCHORS TYPE 'B'	ANCHORS TYPE 'C'	ANCHORS TYPE 'A'	ANCHORS TYPE 'B'	ANCHORS TYPE 'C'
24"	84"	70.0	70.0	70.0	70.0	70.0	70.0
30"		70.0	70.0	70.0	70.0	70.0	70.0
36"		70.0	70.0	70.0	70.0	70.0	70.0
42"		65.3	70.0	70.0	65.3	70.0	70.0
48"		57.1	70.0	70.0	57.1	70.0	70.0
24"	96"	70.0	70.0	70.0	70.0	70.0	70.0
30"		70.0	70.0	70.0	70.0	70.0	70.0
36"		66.7	70.0	70.0	66.7	70.0	70.0
42"		57.1	70.0	70.0	57.1	70.0	70.0
48"		50.0	70.0	70.0	50.0	70.0	70.0
24"	108"	70.0	70.0	70.0	70.0	70.0	70.0
30"		70.0	70.0	70.0	70.0	70.0	70.0
36"		59.3	70.0	70.0	59.3	70.0	70.0
42"		50.8	70.0	70.0	50.8	70.0	70.0
48"		44.4	68.9	70.0	44.4	68.9	70.0
24"	120"	70.0	70.0	70.0	70.0	70.0	70.0
30"		64.0	70.0	70.0	64.0	70.0	70.0
36"		53.3	70.0	70.0	53.3	70.0	70.0
42"		45.7	70.0	70.0	45.7	70.0	70.0
48"		40.0	62.0	69.7	40.0	62.0	70.0

SEE SHEET 8 FOR ANCHORS TYPE 'A'.
SEE SHEET 9 FOR ANCHORS TYPE 'B'.
SEE SHEET 10 FOR ANCHORS TYPE 'C'.

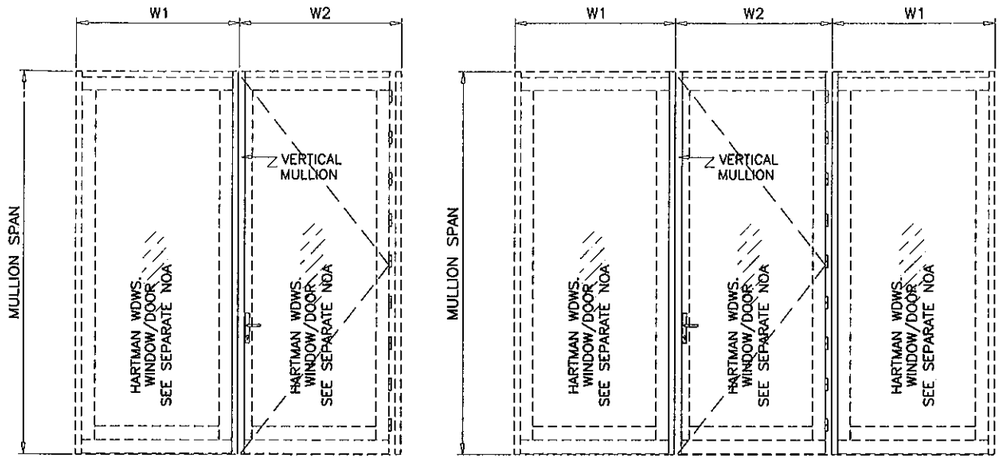

WIDTH (W) = $\frac{W1 + W2}{2}$

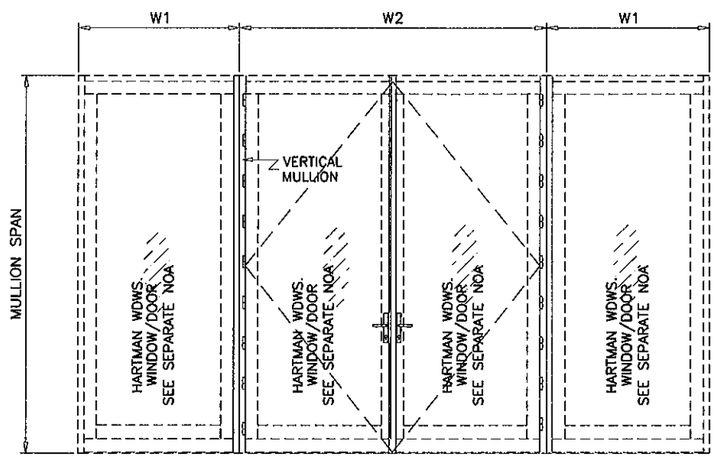

WIDTH (W) = $\frac{W1}{2} + \frac{W2}{4}$

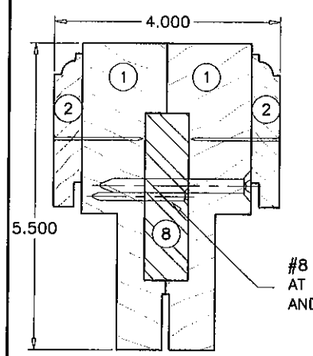

OUT-SWING TO OUT-SWING
VERTICAL JOIN

	WOOD	STEEL
Ix IN^4	29.582	1.688
Sx IN^3	9.241	1.125

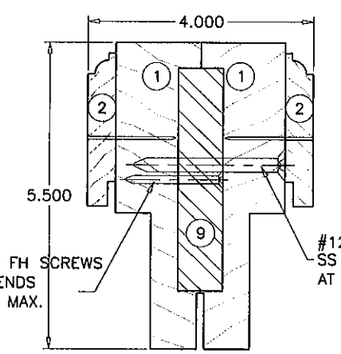

OUT-SWING TO OUT-SWING
VERTICAL JOIN

	WOOD	STEEL
Ix IN^4	27.530	4.000
Sx IN^3	8.752	2.000

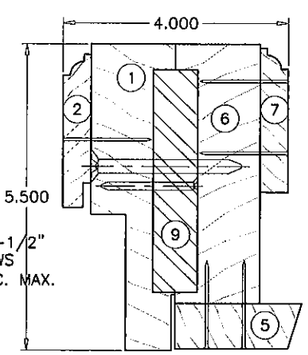

OUT-SWING TO FIXED
VERTICAL JOIN

	WOOD	STEEL
Ix IN^4	24.842	4.000
Sx IN^3	7.898	2.000

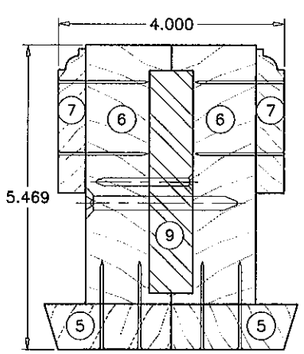

FIXED TO FIXED
VERTICAL JOIN

	WOOD	STEEL
Ix IN^4	22.352	4.000
Sx IN^3	9.447	2.000

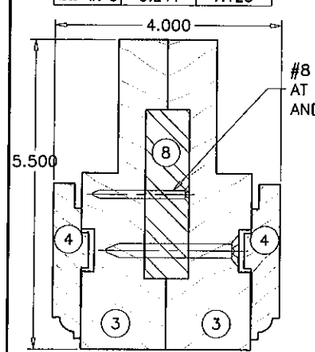

IN-SWING TO IN-SWING
VERTICAL JOIN

	WOOD	STEEL
Ix IN^4	30.440	1.688
Sx IN^3	9.676	1.125

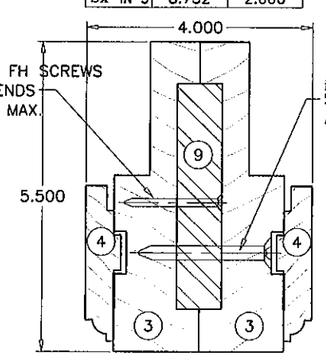

IN-SWING TO IN-SWING
VERTICAL JOIN

	WOOD	STEEL
Ix IN^4	27.887	4.000
Sx IN^3	8.775	2.000

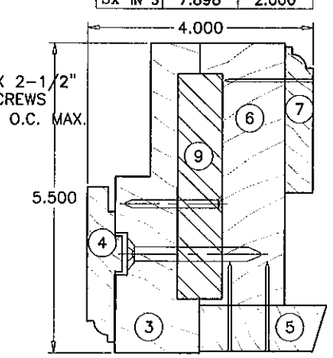

IN-SWING TO FIXED
VERTICAL JOIN

	WOOD	STEEL
Ix IN^4	24.916	4.000
Sx IN^3	7.838	2.000

Engr: JAVAD AHMAD
CIVIL
FLA. PE # 70592
C.A.N. 3538

PRODUCT REVISED
as complying with the Florida Building Code
Acceptance No 12-040304
Expiration Date 6/24/2014
By
Miami Dade Product Control

MAR 07 2012

AL-FAROOQ CORPORATION
ENGINEERS & PRODUCT DEVELOPMENT
1235 S.W. 87 AVE
MIAMI, FLORIDA 33174
TEL. (305) 264-8100 FAX. (305) 262-6978

COMP-ANL\M08-03HWD

CLIPPED/UNCLIPPED WOOD & STEEL MULLION

HARTMAN WINDOWS & DOORS, LLC
531 SOUTHERN BLVD.
WEST PALM BEACH, FL 33405
TEL. (561) 296-9600 FAX. (561) 296-9601

revisions:

no	date	by	description
A	02.27.09		NO CHANGE THIS SHEET
B	05.01.09		REV. PER BCCO COMMENTS
C	02.20.12		NO CHANGE THIS SHEET

date: 06-27-08
scale: 3/8" = 1"
dr. by: HAMID
chk. by:

drawing no.
M08-03

sheet 3 of 10

DESIGN LOAD CAPACITY			
NOMINAL DIMS.			MULLION W/O STEEL ANCHORS TYPE 'A'
OPNG. WIDTH INCHES	FIX. WDW. HT. DOOR HEIGHT INCHES	TRANSOM HEIGHT INCHES	TRANSOM TO FIXED WINDOW
30	108	24	70.0
		36	70.0
		48	70.0
36		24	70.0
		36	70.0
		48	70.0
42		24	70.0
		36	70.0
		48	70.0
48		24	70.0
		36	70.0
		48	70.0
54		24	70.0
		36	70.0
		48	70.0

SEE SHEET 8 FOR ANCHORS TYPE 'A'.

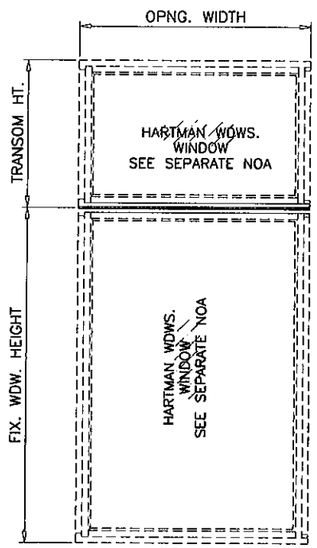

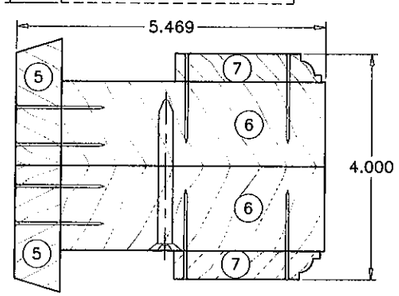

TRANSOM TO FIXED WDW.
HORIZONTAL JOIN

Ix IN^4	26.544
Sx IN^3	11.402

DESIGN LOAD CAPACITY			
NOMINAL DIMS.			MULLION W/O STEEL ANCHORS TYPE 'A'
OPNG. WIDTH INCHES	FIX. WDW. HT. DOOR HEIGHT INCHES	TRANSOM HEIGHT INCHES	TRANSOM TO FIXED WINDOW
72	84	12	70.0
		18	70.0
		24	70.0
		30	70.0
		36	70.0
		42	70.0
		48	70.0
84		12	70.0
		18	70.0
		24	66.6
		30	63.4
		36	60.7
		42	58.3
		48	56.3
96		12	57.1
		18	53.8
		24	50.9
		30	48.4
		36	46.2
		42	44.4
		48	42.7
72	96	12	70.0
		18	70.0
		24	70.0
		30	70.0
		36	70.0
		42	70.0
		48	70.0
84		12	66.2
		18	62.9
		24	59.9
		30	57.3
		36	55.0
		42	53.1
		48	51.5
96		12	50.7
		18	48.1
		24	45.8
		30	43.8
		36	42.0
		42	40.4
		48	39.1

DESIGN LOAD CAPACITY			
NOMINAL DIMS.			MULLION W/O STEEL ANCHORS TYPE 'A'
OPNG. WIDTH INCHES	FIX. WDW. HT. DOOR HEIGHT INCHES	TRANSOM HEIGHT INCHES	TRANSOM TO FIXED WINDOW
72	108	12	70.0
		18	70.0
		24	70.0
		30	70.0
		36	69.0
		42	67.0
		48	65.3
84		12	59.6
		18	56.9
		24	54.4
		30	52.3
		36	50.4
		42	48.8
		48	47.4
96		12	45.6
		18	43.5
		24	41.6
		30	39.9
		36	38.4
		42	37.1
		48	36.0
72	120	12	70.0
		18	70.0
		24	68.0
		30	65.6
		36	63.6
		42	61.8
		48	60.4
84		12	54.2
		18	51.9
		24	49.9
		30	48.1
		36	46.5
		42	45.1
		48	43.9
96		12	41.5
		18	39.7
		24	38.1
		30	36.7
		36	35.5
		42	34.3
		48	33.4

SEE SHEET 8 FOR ANCHORS TYPE 'A'.

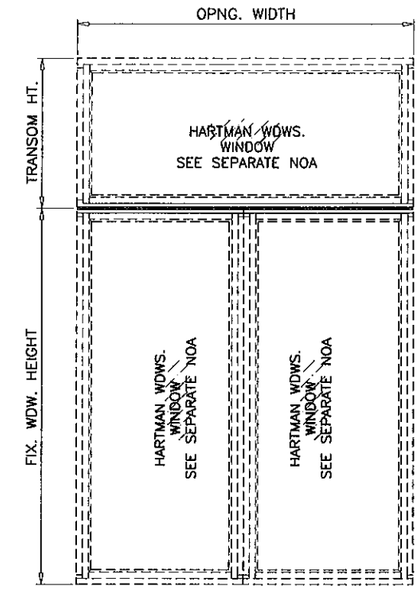

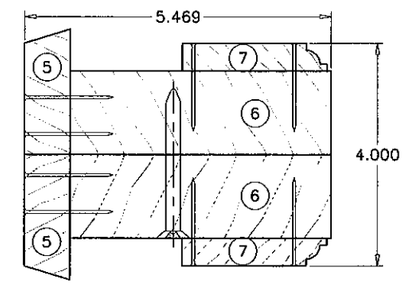

TRANSOM TO FIXED WDW.
HORIZONTAL JOIN

Ix IN^4	26.544
Sx IN^3	11.402

Engr: JAVAD AHMAD
CIVIL
FLA. PE # 70592
C.A.N. 3538

MAR 07 2012

PRODUCT REVISED
as complying with the Florida Building Code
Acceptance No 12-0403.04
Expiration Date 6/24/2014
By
Miami Dade Product Control

AL-FAROOQ CORPORATION
ENGINEERS & PRODUCT DEVELOPMENT
1235 S.W. 87 AVE
MIAMI, FLORIDA 33174
TEL. (305) 264-8100 FAX. (305) 262-6978

COMP-ANL\M08-03HWD

CLIPPED/UNCLIPPED WOOD & STEEL MULLION

HARTMAN WINDOWS & DOORS, LLC
531 SOUTHERN BLVD.
WEST PALM BEACH, FL 33405
TEL. (561) 296-9600 FAX. (561) 296-9601

revisions:

no	date	by	description
A	02.27.09		NO CHANGE THIS SHEET
B	05.01.09		REV. PER BCCO COMMENTS
C	02.20.12		NO CHANGE THIS SHEET

date: 06-27-08
scale: 3/8" = 1"
dr. by: HAMID
chk. by:

drawing no.
M08-03

DESIGN LOAD CAPACITY			
NOMINAL DIMS.			MULLION W/O STEEL ANCHORS TYPE 'A'
OPNG. WIDTH INCHES	FIX. WDW. HT. DOOR HEIGHT INCHES	TRANSOM HEIGHT INCHES	TRANSOM TO OUTSWING/INSWING DOOR
72	84	12	70.0
		18	70.0
		24	70.0
		30	67.8
		36	65.0
		42	62.8
		48	60.9
84		12	58.3
		18	55.0
		24	52.1
		30	49.6
		36	47.5
		42	45.6
		48	44.1
96		12	44.6
		18	42.1
		24	39.8
		30	37.9
		36	36.2
		42	34.7
		48	33.4
72	96	12	70.0
		18	67.0
		24	63.9
		30	61.2
		36	59.0
		42	57.1
		48	55.6
84		12	51.8
		18	49.2
		24	46.9
		30	44.8
		36	43.1
		42	41.6
		48	40.3
96		12	39.7
		18	37.6
		24	35.8
		30	34.2
		36	32.9
		42	31.6
		48	30.6

DESIGN LOAD CAPACITY			
NOMINAL DIMS.			MULLION W/O STEEL ANCHORS TYPE 'A'
OPNG. WIDTH INCHES	FIX. WDW. HT. DOOR HEIGHT INCHES	TRANSOM HEIGHT INCHES	TRANSOM TO OUTSWING/INSWING DOOR
72	108	12	63.5
		18	60.6
		24	58.1
		30	55.9
		36	54.0
		42	52.4
		48	51.1
84		12	46.6
		18	44.5
		24	42.6
		30	40.9
		36	39.4
		42	38.2
		48	37.1
96		12	35.7
		18	34.0
		24	32.6
		30	31.3
		36	30.1
		42	29.1
		48	28.2
72	120	12	57.7
		18	55.3
		24	53.2
		30	51.3
		36	49.7
		42	48.4
		48	47.3
84		12	42.4
		18	40.6
		24	39.0
		30	37.6
		36	36.4
		42	35.3
		48	34.3
96		12	32.5
		18	31.1
		24	29.8
		30	28.7
		36	27.7
		42	26.9
		48	26.1

SEE SHEET 8 FOR ANCHORS TYPE 'A'.

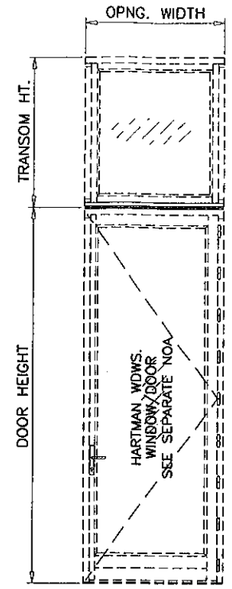

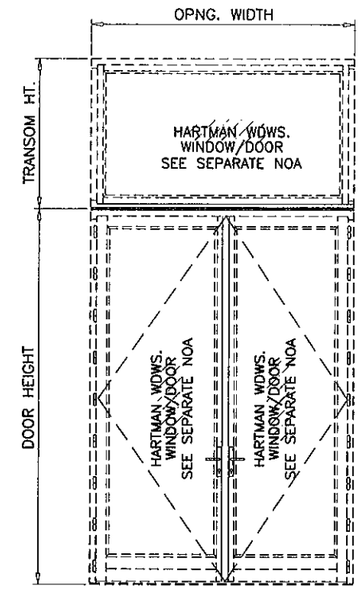

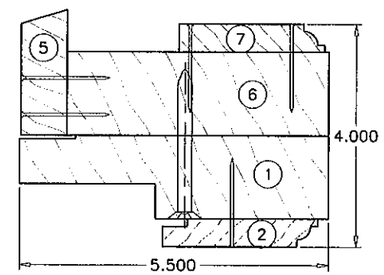

TRANSOM TO OUT-SWING
HORIZONTAL JOIN

Ix IN^4	29.176
Sx IN^3	9.348

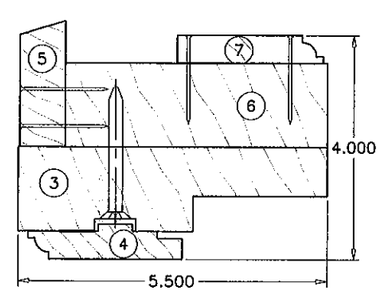

TRANSOM TO IN-SWING
HORIZONTAL JOIN

Ix IN^4	29.550
Sx IN^3	9.601

Engr: JAVAD AHMAD
CIVIL
FLA. PE # 70592
C.A.N. 3538

MAR 07 2012

PRODUCT REVISED
as complying with the Florida Building Code
Acceptance No 12-0403.04
Expiration Date 6/24/2014
By
Miami Dade Product Control

AL-FAROOQ CORPORATION
ENGINEERS & PRODUCT DEVELOPMENT
1235 S.W. 87 AVE
MIAMI, FLORIDA 33174
TEL. (305) 264-8100 FAX. (305) 262-6978

COMP-ANL\M08-03HWD

CLIPPED/UNCLIPPED WOOD & STEEL MULLION

HARTMAN WINDOWS & DOORS, LLC
531 SOUTHERN BLVD.
WEST PALM BEACH, FL 33405
TEL. (561) 296-9600 FAX. (561) 296-9601

revisions:

no	date	by	description
A	02.27.09		NO CHANGE THIS SHEET
B	05.01.09		REV. PER BCCO COMMENTS
C	02.20.12		NO CHANGE THIS SHEET

date: 06-27-08
scale: 3/8" = 1"
dr. by: HAMID
chk. by:

drawing no.
M08-03

DESIGN LOAD CAPACITY						
NOMINAL DIMS.			3" MULLION		4" MULLION	
OPNG. WIDTH INCHES	DOOR HEIGHT INCHES	TRANSOM HEIGHT INCHES	ANCHOR TYPE 'A'	ANCHOR TYPE 'B'	ANCHOR TYPE 'A'	ANCHOR TYPE 'B'
72	84	12	70.0	70.0	70.0	70.0
		18	70.0	70.0	70.0	70.0
		24	70.0	70.0	70.0	70.0
		30	70.0	70.0	70.0	70.0
		36	70.0	70.0	70.0	70.0
		42	70.0	70.0	70.0	70.0
		48	70.0	70.0	70.0	70.0
84		12	70.0	70.0	70.0	70.0
		18	70.0	70.0	70.0	70.0
		24	70.0	70.0	70.0	70.0
		30	70.0	70.0	70.0	70.0
		36	70.0	70.0	70.0	70.0
		42	70.0	70.0	70.0	70.0
		48	70.0	70.0	70.0	70.0
96		12	70.0	70.0	70.0	70.0
		18	70.0	70.0	70.0	70.0
		24	70.0	70.0	70.0	70.0
		30	70.0	70.0	70.0	70.0
		36	67.4	70.0	67.4	70.0
		42	64.2	70.0	64.2	70.0
		48	61.5	70.0	61.5	70.0
72	96	12	70.0	70.0	70.0	70.0
		18	70.0	70.0	70.0	70.0
		24	70.0	70.0	70.0	70.0
		30	70.0	70.0	70.0	70.0
		36	70.0	70.0	70.0	70.0
		42	70.0	70.0	70.0	70.0
		48	70.0	70.0	70.0	70.0
84		12	70.0	70.0	70.0	70.0
		18	70.0	70.0	70.0	70.0
		24	70.0	70.0	70.0	70.0
		30	70.0	70.0	70.0	70.0
		36	70.0	70.0	70.0	70.0
		42	69.0	70.0	69.0	70.0
		48	66.7	70.0	66.7	70.0
96		12	70.0	70.0	70.0	70.0
		18	70.0	70.0	70.0	70.0
		24	69.6	70.0	69.6	70.0
		30	65.5	70.0	65.5	70.0
		36	62.1	70.0	62.1	70.0
		42	59.4	70.0	59.4	70.0
		48	57.1	67.8	57.1	70.0

DESIGN LOAD CAPACITY						
NOMINAL DIMS.			3" MULLION		4" MULLION	
OPNG. WIDTH INCHES	DOOR HEIGHT INCHES	TRANSOM HEIGHT INCHES	ANCHOR TYPE 'A'	ANCHOR TYPE 'B'	ANCHOR TYPE 'A'	ANCHOR TYPE 'B'
72	108	12	70.0	70.0	70.0	70.0
		18	70.0	70.0	70.0	70.0
		24	70.0	70.0	70.0	70.0
		30	70.0	70.0	70.0	70.0
		36	70.0	70.0	70.0	70.0
		42	70.0	70.0	70.0	70.0
		48	70.0	70.0	70.0	70.0
84		12	70.0	70.0	70.0	70.0
		18	70.0	70.0	70.0	70.0
		24	70.0	70.0	70.0	70.0
		30	69.8	70.0	69.8	70.0
		36	66.7	70.0	66.7	70.0
		42	64.2	70.0	64.2	70.0
		48	62.1	70.0	62.1	70.0
96		12	70.0	70.0	70.0	70.0
		18	68.3	70.0	68.3	70.0
		24	64.0	70.0	64.0	70.0
		30	60.5	69.3	60.5	70.0
		36	57.7	66.7	57.7	70.0
		42	55.3	64.5	55.3	70.0
		48	53.3	62.5	53.3	70.0
72	120	12	70.0	70.0	70.0	70.0
		18	70.0	70.0	70.0	70.0
		24	70.0	70.0	70.0	70.0
		30	70.0	70.0	70.0	70.0
		36	70.0	70.0	70.0	70.0
		42	70.0	70.0	70.0	70.0
		48	69.6	70.0	69.6	70.0
84		12	70.0	70.0	70.0	70.0
		18	70.0	70.0	70.0	70.0
		24	68.1	70.0	68.1	70.0
		30	64.8	70.0	64.8	70.0
		36	62.1	70.0	62.1	70.0
		42	60.0	70.0	60.0	70.0
		48	58.2	70.0	58.2	70.0
96		12	67.4	70.0	67.4	70.0
		18	62.9	69.0	62.9	70.0
		24	59.3	66.2	59.3	70.0
		30	56.3	63.7	56.3	70.0
		36	53.8	61.6	53.8	70.0
		42	51.7	59.6	51.7	70.0
		48	50.0	57.9	50.0	70.0

SEE SHEET 8 FOR ANCHORS TYPE 'A'.
SEE SHEET 9 FOR ANCHORS TYPE 'B'.

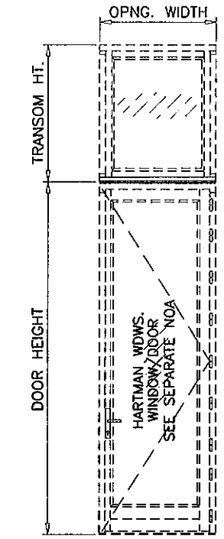

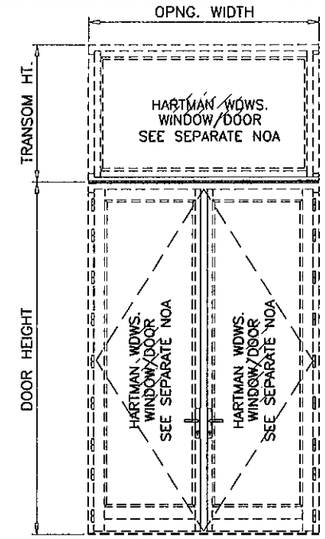

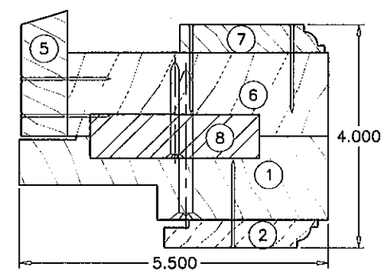

TRANSOM TO OUT-SWING
HORIZONTAL JOIN

	WOOD	STEEL
Ix IN^4	26.863	1.688
Sx IN^3	8.392	1.125

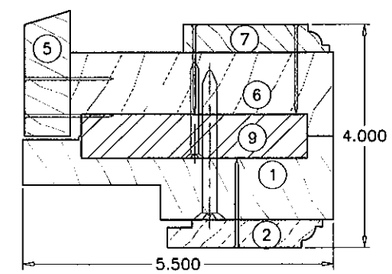

TRANSOM TO OUT-SWING
HORIZONTAL JOIN

	WOOD	STEEL
Ix IN^4	24.812	4.000
Sx IN^3	7.898	2.000

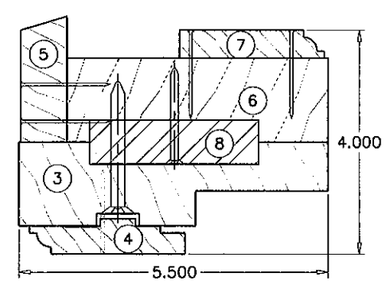

TRANSOM TO IN-SWING
HORIZONTAL JOIN

	WOOD	STEEL
Ix IN^4	27.289	1.688
Sx IN^3	8.669	1.125

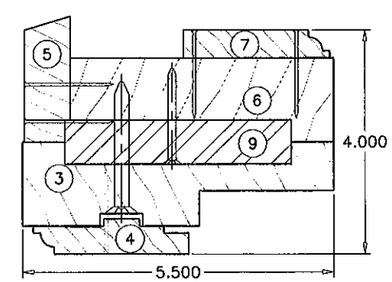

TRANSOM TO IN-SWING
HORIZONTAL JOIN

	WOOD	STEEL
Ix IN^4	24.916	4.000
Sx IN^3	7.838	2.000

PRODUCT REVISED
as complying with the Florida
Building Code
Acceptance No. 12-0403.04
Expiration Date 6/24/2014
By
Miami Dade Product Control

Engr: JAVAD AHMAD
CIVIL
FLA. PE # 70592
C.A.N. 3538

MAR 07 2012

AL-FAROOQ CORPORATION
ENGINEERS & PRODUCT DEVELOPMENT
1235 S.W. 87 AVE
MIAMI, FLORIDA 33174
TEL. (305) 264-8100 FAX. (305) 262-6978

COMP-ANL\M08-03HWD

CLIPPED/UNCLIPPED WOOD & STEEL MULLION

HARTMAN WINDOWS & DOORS, LLC
531 SOUTHERN BLVD.
WEST PALM BEACH, FL 33405
TEL. (561) 296-9600 FAX. (561) 296-9601

revisions:

no	date	by	description
A	02.27.09		NO CHANGE THIS SHEET
B	05.01.09		REV. PER BCCO COMMENTS
C	02.20.12		NO CHANGE THIS SHEET

date: 06-27-08
scale: 3/8" = 1"
dr. by: HAMID
chk. by:

drawing no.
M08-03

DESIGN LOAD CAPACITY – PSF					
NOMINAL DIMS.		4" MULLION		5" MULLION	
WIDTH (W)	MULL SPAN	ANCHOR TYPE 'B'	ANCHOR TYPE 'C'	ANCHOR TYPE 'B'	ANCHOR TYPE 'C'
48"	96"	70.0	70.0	70.0	70.0
54"		68.9	70.0	68.9	70.0
60"		62.0	70.0	62.0	70.0
66"		56.4	70.0	56.4	70.0
72"		51.7	70.0	51.7	70.0
78"		47.7	69.2	47.7	70.0
84"		44.3	64.3	44.3	66.4
48"	108"	68.9	70.0	68.9	70.0
54"		61.2	70.0	61.2	70.0
60"		55.1	70.0	55.1	70.0
66"		50.1	64.6	50.1	70.0
72"		45.9	59.3	45.9	68.9
78"		42.4	54.7	42.4	63.6
84"		39.4	50.8	39.4	59.0
48"	120"	62.0	70.0	62.0	70.0
54"		55.1	64.0	55.1	70.0
60"		49.6	57.6	49.6	70.0
66"		45.1	52.4	45.1	67.6
72"		41.3	48.0	41.3	62.0
78"		38.2	44.3	38.2	57.2
84"		35.4	41.1	35.4	53.1
48"	132"	56.4	59.5	56.4	70.0
54"		50.1	52.9	50.1	70.0
60"		45.1	47.6	45.1	67.6
66"		41.0	43.3	41.0	61.5
72"		37.6	39.7	37.6	56.4
78"		34.7	36.6	34.7	52.0
84"		32.2	34.0	32.2	48.3
48"	144"	49.7	49.7	51.7	70.0
54"		44.2	44.2	45.9	68.9
60"		39.8	39.8	41.3	62.0
66"		36.2	36.2	37.6	56.4
72"		33.2	33.2	34.4	51.7
78"		30.6	30.6	31.8	47.7
84"		–	–	–	44.3
48"	156"	39.1	39.1	47.7	66.6
54"		34.8	34.8	42.4	59.2
60"		31.3	31.3	38.2	53.3
66"		–	–	34.7	48.4
72"		–	–	31.8	44.4
78"		–	–	–	41.0
84"		–	–	–	38.0

SEE SHEET 9 FOR ANCHORS TYPE 'B'.
SEE SHEET 10 FOR ANCHORS TYPE 'C'.

NOTE:
DESIGN LOAD CAPACITY IN CHART ABOVE IS BASED ON STEEL BARS ONLY. WOOD VALUES NOT USED.

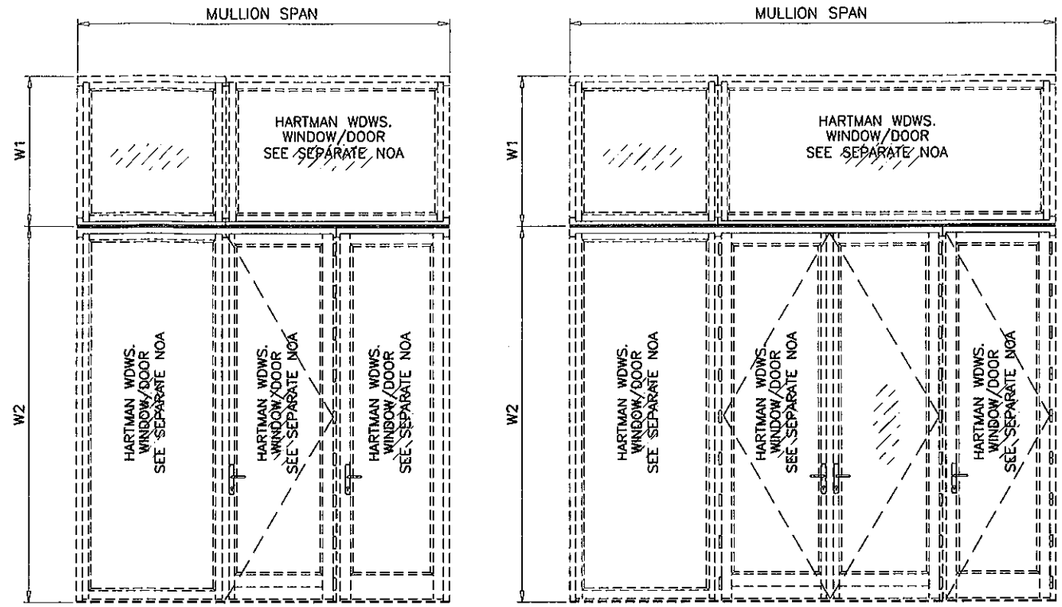

$$\text{WIDTH (W)} = \frac{W1 + W2}{2}$$

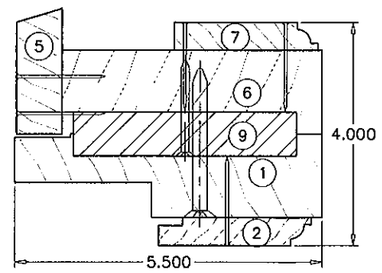

TRANSOM TO OUT-SWING
HORIZONTAL JOIN

	STEEL
Ix IN^4	4.000
Sx IN^3	2.000

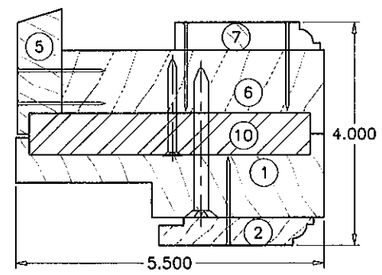

TRANSOM TO OUT-SWING
HORIZONTAL JOIN

	STEEL
Ix IN^4	7.813
Sx IN^3	3.125

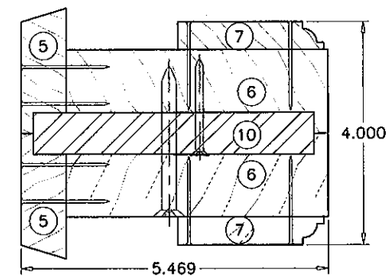

TRANSOM TO FIXED WDW.
HORIZONTAL JOIN

	STEEL
Ix IN^4	7.813
Sx IN^3	3.125

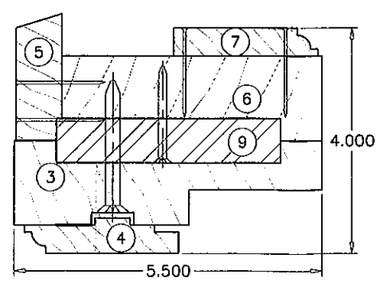

TRANSOM TO IN-SWING
HORIZONTAL JOIN

	STEEL
Ix IN^4	4.000
Sx IN^3	2.000

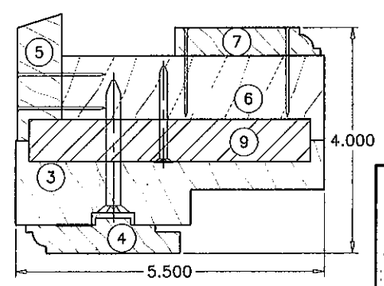

TRANSOM TO IN-SWING
HORIZONTAL JOIN

	STEEL
Ix IN^4	7.813
Sx IN^3	3.125

Engr: JAVAD AHMAD
CIVIL
FLA. PE # 70592
C.A.N. 3538

PRODUCT REVISED
as complying with the Florida Building Code
Acceptance No. 12-0403.04
Expiration Date 6/24/2014
By
Miami Dade Product Control

MAR 07 2012

AL-FAROOQ CORPORATION
ENGINEERS & PROJECT DEVELOPMENT
1235 S.W. 87 AVE
MIAMI, FLORIDA 33174
TEL. (305) 264-8100 FAX. (305) 262-6978

COMP-ANL\M08-03HWD

CLIPPED/UNCLIPPED WOOD & STEEL MULLION

HARTMAN WINDOWS & DOORS, LLC
531 SOUTHERN BLVD.
WEST PALM BEACH, FL 33405
TEL. (561) 296-9600 FAX. (561) 296-9601

revisions:

no	date	by	description
A	02.27.09		NO CHANGE THIS SHEET
B	05.01.09		REV. PER BCCO COMMENTS
C	02.20.12		NO CHANGE THIS SHEET

date: 06-27-08
scale: 3/8" = 1"
dr. by: HAMID
chk. by:

drawing no.
M08-03

HEAD & SILL ANCHORS FOR MULLED WINDOWS & DOORS WITH MULLION CLIP

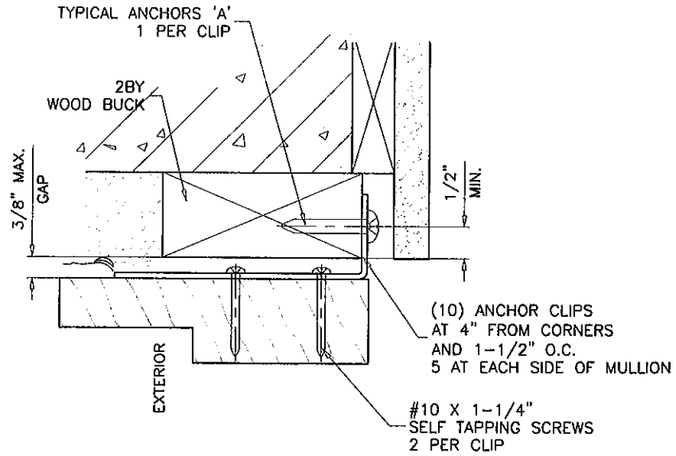

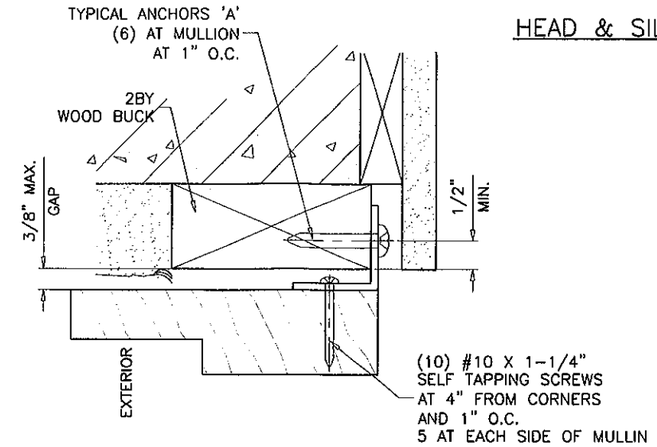

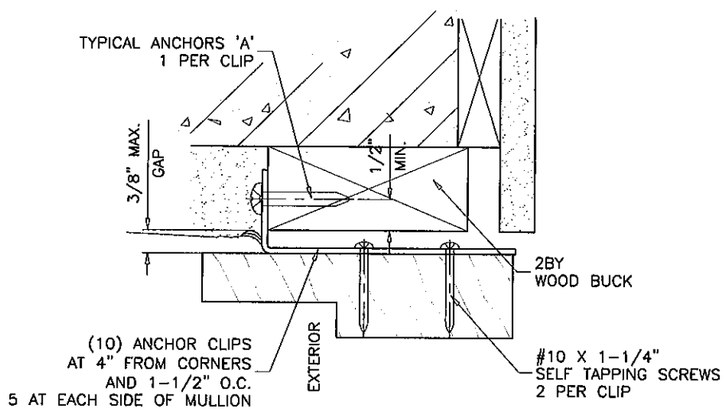

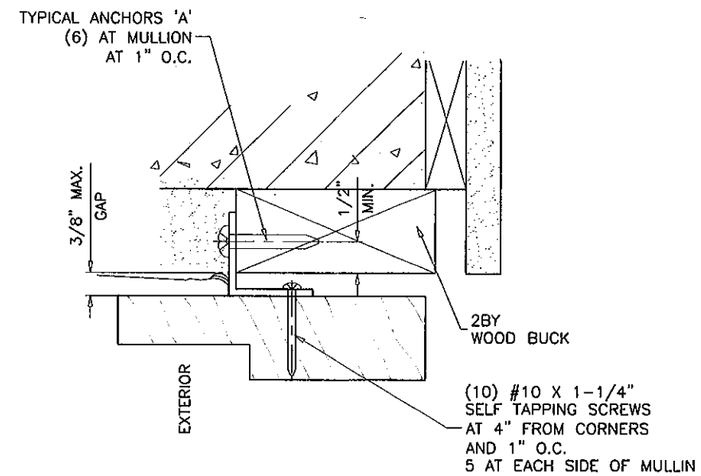

ANCHORS TYPE 'A'

ANCHORS THRU STRAP CLIPS & ALUM ANGLE

#10 SMS

INTO 2BY WOOD BUCKS OR WOOD STRUCTURE
1-1/2" MIN. PENETRATION INTO WOOD

ANCHOR EDGE DISTANCES

INTO WOOD STRUCTURE = 3/4" MIN. (UNLESS SPECIFIED)

ANCHORS CL TO CL DISTANCE

INTO WOOD STRUCTURE = 3/4" MIN. (UNLESS SPECIFIED)

ALL OTHER ANCHORS NOT DESCRIBED HEREIN TO BE AS PER DOOR OR FIXED LITE NOA'S.

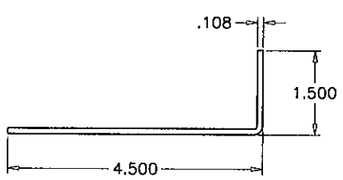

STRAP CLIP, 1-3/8" WIDE
12 GA. GALV. STEEL

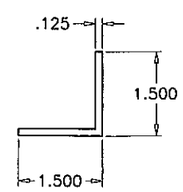

ALUMINUM ANGLE CONT.
(6063-T6)

Engr: JAVAD AHMAD
CIVIL
FLA. PE # 70592
C.A.N. 3538

MAR 07 2012

PRODUCT REVISED
as complying with the Florida Building Code
Acceptance No 12-0403.04
Expiration Date 6/24/2014
By
Miami Dade Product Control

AL-FAROOQ CORPORATION
ENGINEERS & PRODUCT DEVELOPMENT
1235 S.W. 87 AVE
MIAMI, FLORIDA 33174
TEL. (305) 264-8100 FAX. (305) 262-6978

COMP-ANL\M08-03HWD

CLIPPED/UNCLIPPED WOOD & STEEL MULLION

HARTMAN WINDOWS & DOORS, LLC
531 SOUTHERN BLVD.
WEST PALM BEACH, FL 33405
TEL. (561) 296-9600 FAX. (561) 296-9601

revisions:

no	date	by	description
A	02.27.09		NO CHANGE THIS SHEET
B	05.01.09		NO CHANGE THIS SHEET
C	02.20.12		NO CHANGE THIS SHEET

date: 06-27-08
scale: 3/8" = 1"
dr. by: HAMID
chk. by:

drawing no.
M08-03

HEAD & SILL ANCHORS FOR MULLED WINDOWS & DOORS WITH STEEL PLATE

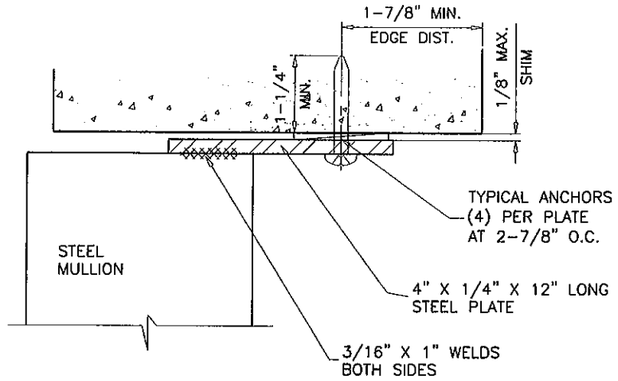

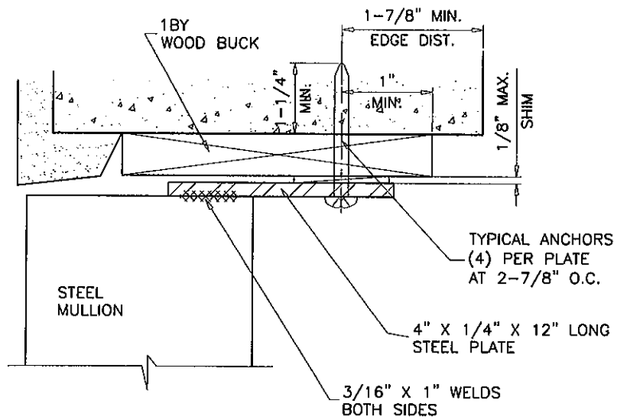

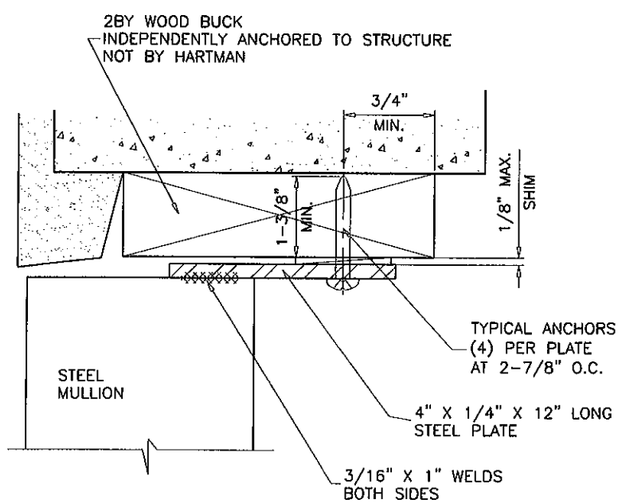

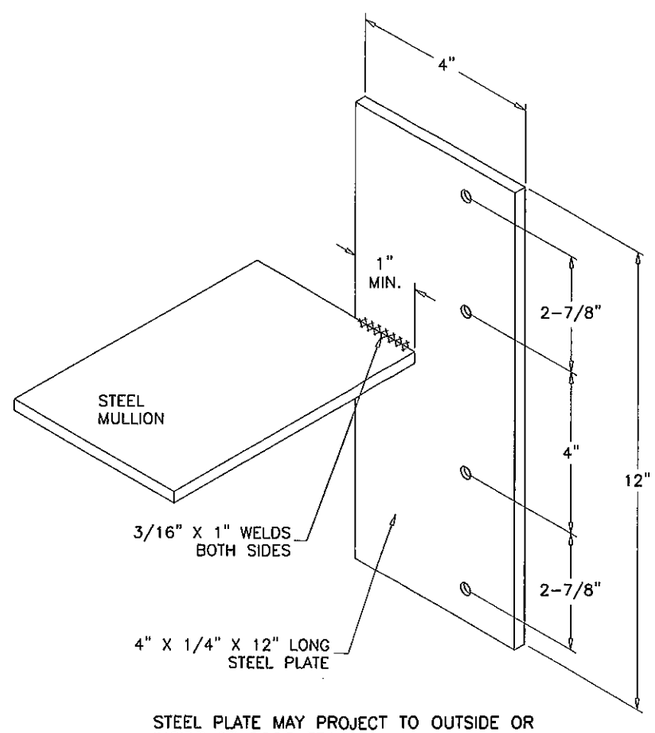

STEEL PLATE MAY PROJECT TO OUTSIDE OR INSIDE OF DOOR FRAME.

ANCHORS TYPE 'B'

ANCHORS THRU STEEL PLATE

1/4" DIA. ULTRACON BY 'ELCO' (Fu=177 KSI, Fy=155 KSI)

INTO 2BY WOOD BUCKS OR WOOD STRUCTURES
1-1/2" MIN. PENETRATION INTO WOOD

THRU 1BY BUCKS INTO CONC. OR MASONRY
1-1/4" MIN. EMBED INTO CONC. OR MASONRY

DIRECTLY INTO CONC. OR MASONRY
1-1/4" MIN. EMBED INTO CONC. OR MASONRY

TYPICAL EDGE DISTANCE

INTO CONCRETE AND MASONRY = 2-1/2" MIN.
INTO WOOD STRUCTURE = 1" MIN.

CONCRETE f'c = 3000 PSI MIN.
MASONRY f'm = 2000 PSI MIN.

ALL OTHER ANCHORS NOT DESCRIBED HEREIN TO BE AS PER DOOR OR FIXED LITE NOA'S.

Engr: JAVAD AHMAD
CIVIL
FLA. PE # 70592
C.A.N. 3538

PRODUCT REVISED
as complying with the Florida Building Code
Acceptance No. 12-0403.04
Expiration Date 6/24/2014
By
Miami Dade Product Control

MAR 07 2012

AL-FAROOQ CORPORATION
ENGINEERS & PRODUCT DEVELOPMENT
1235 S.W. 87 AVE
MIAMI, FLORIDA 33174
TEL. (305) 264-8100 FAX. (305) 262-6978

COMP-ANL\M08-03HWD

CLIPPED/UNCLIPPED WOOD & STEEL MULLION

HARTMAN WINDOWS & DOORS, LLC
531 SOUTHERN BLVD.
WEST PALM BEACH, FL 33405
TEL. (561) 296-9600 FAX. (561) 296-9601

revisions:

no	date	by	description
A	02.27.09		NO CHANGE THIS SHEET
B	05.01.09		NO CHANGE THIS SHEET
C	02.20.12		NO CHANGE THIS SHEET

date: 06-27-08
scale: 3/8" = 1"
dr. by: HAMID
chk. by:

drawing no.
M08-03

HEAD & SILL ANCHORS FOR MULLED WINDOWS & DOORS WITH STEEL PLATE

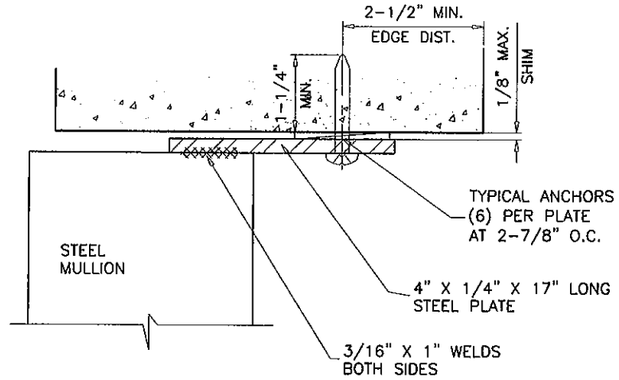

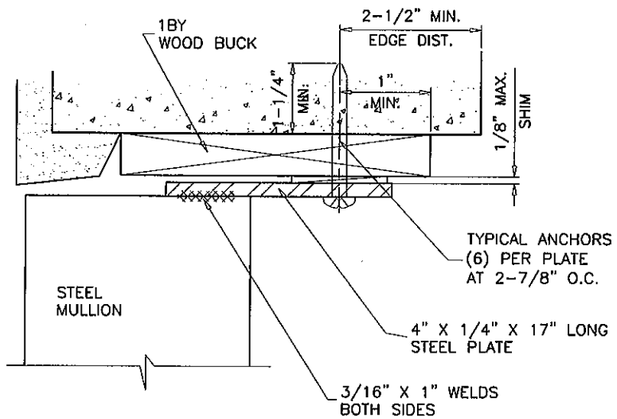

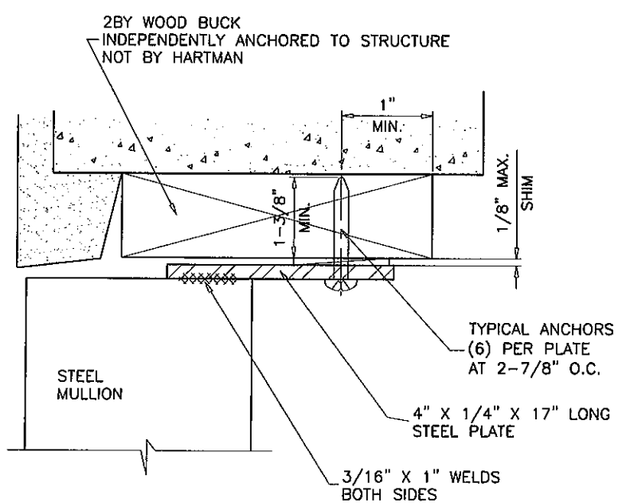

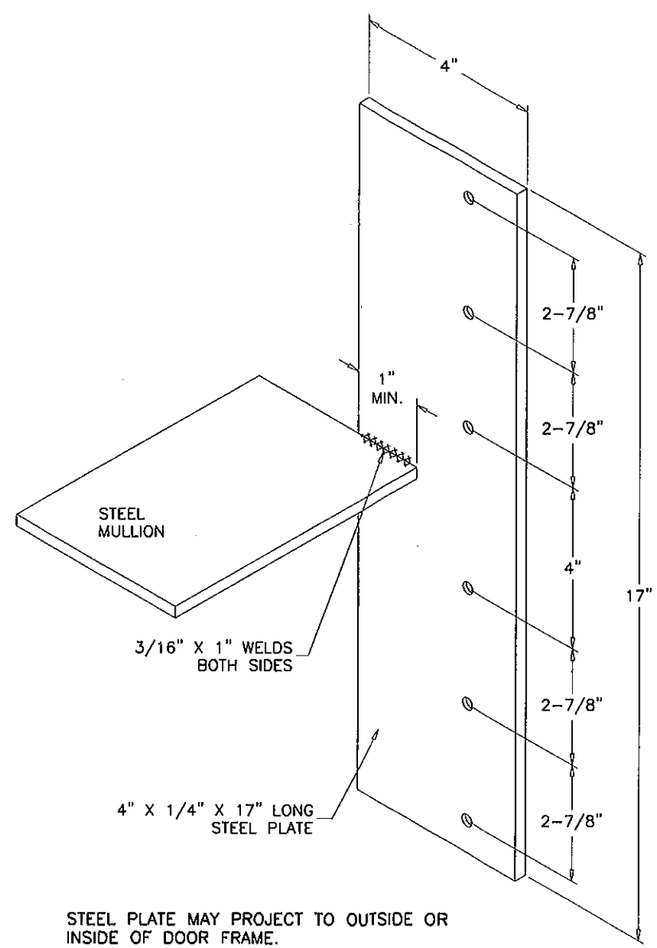

STEEL PLATE MAY PROJECT TO OUTSIDE OR INSIDE OF DOOR FRAME.

ANCHORS TYPE 'C'

ANCHORS THRU STEEL PLATE

1/4" DIA. ULTRACON BY 'ELCO' (Fu=177 KSI, Fy=155 KSI)

INTO 2BY WOOD BUCKS OR WOOD STRUCTURES
1-1/2" MIN. PENETRATION INTO WOOD

THRU 1BY BUCKS INTO CONC. OR MASONRY
1-1/4" MIN. EMBED INTO CONC. OR MASONRY

DIRECTLY INTO CONC. OR MASONRY
1-1/4" MIN. EMBED INTO CONC. OR MASONRY

TYPICAL EDGE DISTANCE

INTO CONCRETE AND MASONRY = 2-1/2" MIN.
INTO WOOD STRUCTURE = 1" MIN.

CONCRETE f'c = 3000 PSI MIN.
MASONRY f'm = 2000 PSI MIN.

ALL OTHER ANCHORS NOT DESCRIBED HEREIN TO BE AS PER DOOR OR FIXED LITE NOA'S.

PRODUCT REVISED
as complying with the Florida Building Code
Acceptance No 12-0403.04
Expiration Date 6/24/2014
By
Miami Dade Product Control

Engr: JAVAD AHMAD
CIVIL
FLA. PE # 70592
C.A.N. 3538

MAR 07 2012

AL-FAROOQ CORPORATION
ENGINEERS & PRODUCT DEVELOPMENT
1235 S.W. 87 AVE
MIAMI, FLORIDA 33174
TEL. (305) 264-8100 FAX. (305) 262-6978

COMP-ANL\M08-03HWD

CLIPPED/UNCLIPPED WOOD & STEEL MULLION

HARTMAN WINDOWS & DOORS, LLC
531 SOUTHERN BLVD.
WEST PALM BEACH, FL 33405
TEL. (561) 296-9600 FAX. (561) 296-9601

revisions:

no	date	by	description
A	02.27.09		NO CHANGE THIS SHEET
B	05.01.09		NO CHANGE THIS SHEET
C	02.20.12		NO CHANGE THIS SHEET

date: 06-27-08
scale: 3/8" = 1"
dr. by: HAMID
chk. by:

drawing no.
M08-03