MIAMI-DADE COUNTY
DEPARTMENT OF PERMITTING, ENVIRONMENT, AND REGULATORY AFFAIRS (PERA)
BOARD AND CODE ADMINISTRATION DIVISION

MIAMI-DADE COUNTY
PRODUCT CONTROL SECTION
11805 SW 26 Street, Room 208
Miami, Florida 33175-2474
T (786) 315-2590 F (786) 315-2599
www.miamidade.gov/pera/

NOTICE OF ACCEPTANCE (NOA)

Record-USA, Inc.
4324 Phil Hargett Court
Monroe, NC 28110

SCOPE:

This NOA is being issued under the applicable rules and regulations governing the use of construction materials. The documentation submitted has been reviewed and accepted by Miami-Dade County PERA -Product Control Section to be used in Miami Dade County and other areas where allowed by the Authority Having Jurisdiction (AHJ).

This NOA shall not be valid after the expiration date stated below. The Miami-Dade County Product Control Section (In Miami Dade County) and/or the AHJ (in areas other than Miami Dade County) reserve the right to have this product or material tested for quality assurance purposes. If this product or material fails to perform in the accepted manner, the manufacturer will incur the expense of such testing and the AHJ may immediately revoke, modify, or suspend the use of such product or material within their jurisdiction. PERA reserves the right to revoke this acceptance, if it is determined by Miami-Dade County Product Control Section that this product or material fails to meet the requirements of the applicable building code.

This product is approved as described herein, and has been designed to comply with the Florida Building Code, including the High Velocity Hurricane Zone.

DESCRIPTION: Series "5400" Aluminum Automatic Sliding Glass Door w/ Breakout-LMI

APPROVAL DOCUMENT: Drawing No. **09-REU-0001**, titled "Series 5400 Automatic Sliding Glass Door", sheets 1 through 23 of 23 prepared by Engineering Express, dated 06-26-2009 and last revised on 03/27/2012, signed and sealed by Frank L. Bernando, P.E., bearing the Miami-Dade County Product Control revision stamp with the Notice of Acceptance number and expiration date by the Miami-Dade County Product Control section.

MISSILE IMPACT RATING: Large and Small Missile Impact

LIMITATIONS:

1. Not approved where water infiltration is required.
2. Full length steel channel reinforcements at stiles are required

LABELING: Each unit shall bear a permanent label with the manufacturer's name or logo, city, state and series and following statement: "Miami-Dade County Product Control Approved", unless otherwise noted herein.

RENEWAL of this NOA shall be considered after a renewal application has been filed and there has been no change in the applicable building code negatively affecting the performance of this product.

TERMINATION of this NOA will occur after the expiration date or if there has been a revision or change in the materials, use, and/or manufacture of the product or process. Misuse of this NOA as an endorsement of any product, for sales, advertising or any other purposes shall automatically terminate this NOA. Failure to comply with any section of this NOA shall be cause for termination and removal of NOA.

ADVERTISEMENT: The NOA number preceded by the words Miami-Dade County, Florida, and followed by the expiration date may be displayed in advertising literature. If any portion of the NOA is displayed, then it shall be done in its entirety.

INSPECTION: A copy of this entire NOA shall be provided to the user by the manufacturer or its distributors and shall be available for inspection at the job site at the request of the Building Official.

This NOA **revises NOA # 09-0712.12** and consists of this page 1 and evidence pages E-1, as well as approval document mentioned above.

The submitted documentation was reviewed by **Ishaq I. Chanda, P.E.**

MIAMI-DADE COUNTY APPROVED

6/21/12

NOTICE OF ACCEPTANCE: EVIDENCE SUBMITTED

A. DRAWINGS

1. Manufacturer's die drawings and sections (submitted under file # **09-0712.12**)
2. Drawing No. **09-REU-0001**, titled "Series 5400 Automatic Sliding Glass Door", sheets 1 through 23 of 23 prepared by Engineering Express, dated 06-26-2009 and last revised on 03/27/2012, signed and sealed by Frank L. Bernando, P.E.

Note: This revision consists of FBC 2010 notes only.

B. TESTS (submitted under file # **09-0712.12**)

1. Test reports on 1) Air Infiltration Test, per FBC, TAS 202-94
   2) Uniform Static Air Pressure Test, per FBC, TAS 202-94
   3) Water Resistance Test, per FBC, TAS 202-94 (Not Performed)
   4) Large Missile Impact Test per FBC, TAS 201-94
   5) Cyclic Wind Pressure Loading per FBC, TAS 203-94
   6) Forced Entry Test, per FBC 2411 3.2.1 and TAS 202-94

along with installation diagram of aluminum automatic entrance door, prepared by American Testing Lab, Inc. Test Report No. **ATLNC 0428.01-08,** dated 04/29/09, signed and sealed by David Johnson, P.E.

Note: This test report has been revised by an addendum letter dated 01/20/10, issued by American Testing Lab, signed and sealed by David Johnson, P.E.

C. CALCULATIONS

1. Anchor Verification Calculations, complying w/ FBC-2007, dated 07-02/09 and last revised on 01/13/10, prepared by Engineering Express, signed and sealed by Frank L. Bennardo, P.E. (submitted under file # **09-0712.12**)
2. Glazing complies w/ ASTME-1300-02 & -04

D. QUALITY ASSURANCE

1. Miami Dade Department of Permitting, Environment, and Regulatory Affairs (PERA).

E. MATERIAL CERTIFICATIONS

1. Notice of Acceptance No. **08-1224.04** issued to Solutia, for "**Saflex composite glass w/ PET core**", expiring on 12/11/13.

F. STATEMENTS

1. Statement letter of conformance to FBC 2010 and letter of no financial interest, prepared by Engineering Express, both dated 03/15/12, signed and sealed by Frank L. Bennardo, P.E.
2. Lab compliance as part of the above referenced test report.

G. OTHER

1. This NOA **revises** NOA # **09-0712.12**, expiring on 03/17/15.
2. Test proposal **#08-0238**, approved by BCCO.

Ishaq I. Chanda

Ishaq I. Chanda, P.E.
Product Control Examiner
NOA No 12-0403.06
Expiration Date: March 17, 2015
Approval Date: June 28, 2012

SERIES 5400 AUTOMATIC SLIDING GLASS DOOR

LARGE MISSILE IMPACT RESISTANT

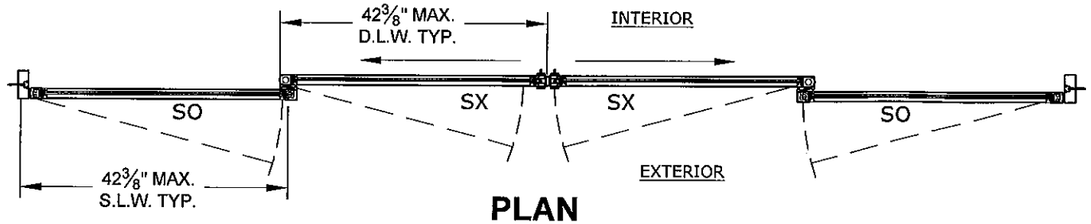

PLAN

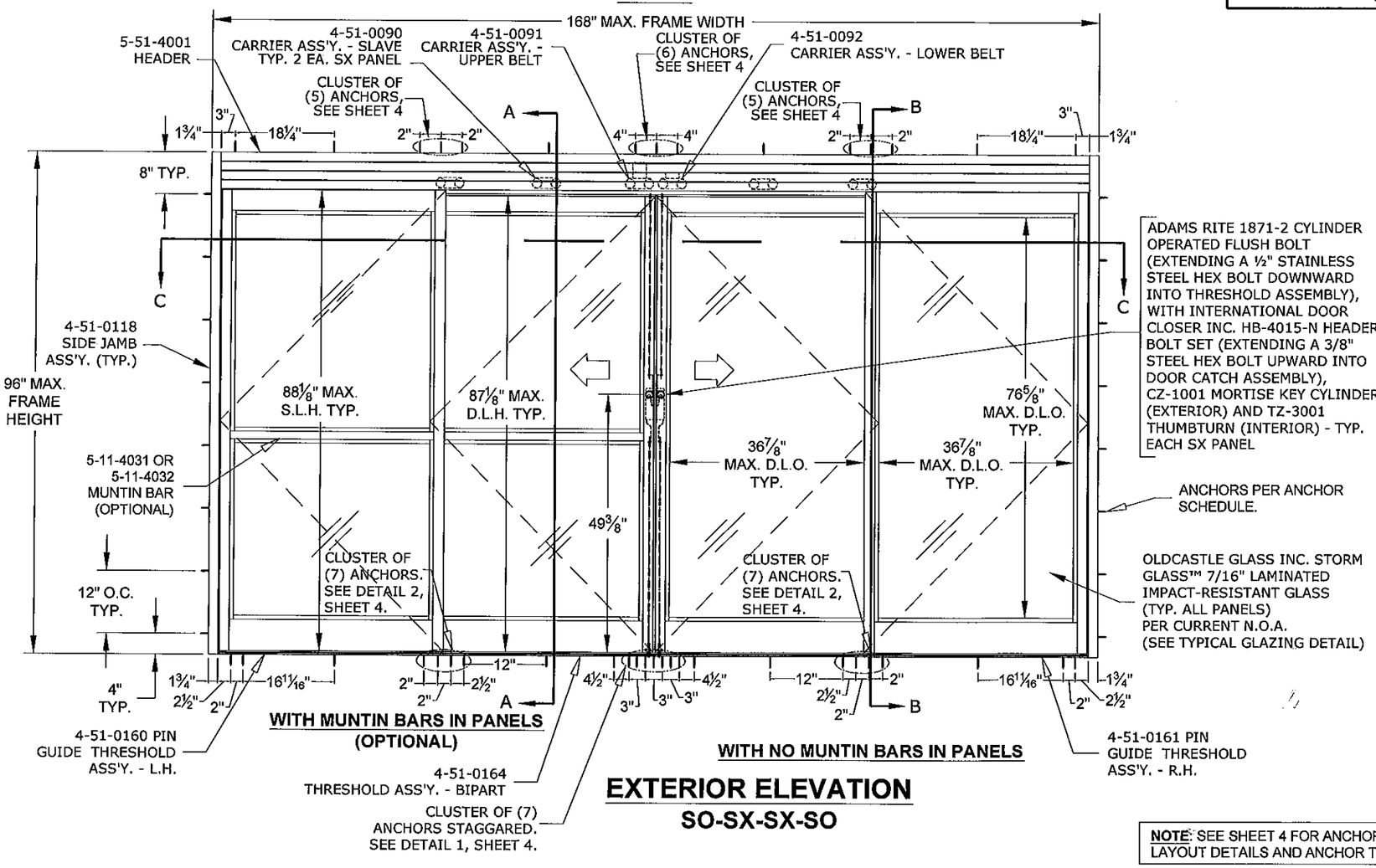

EXTERIOR ELEVATION

SO-SX-SX-SO

DESIGN PRESSURE RATING		IMPACT RATING
POSITIVE	+65 PSF	LARGE AND SMALL MISSILE IMPACT
NEGATIVE	-70 PSF	
NOTE: THIS SYSTEM WAS NOT TESTED FOR WATER INFILTRATION AND IS TO BE INSTALLED ONLY WHERE THE WATER REQUIREMENT IS NOT NEEDED.		

NOTE: SEE SHEET 4 FOR ANCHOR LAYOUT DETAILS AND ANCHOR TYPES.

GENERAL NOTES

1. THE SYSTEM DESCRIBED HEREIN HAS BEEN DESIGNED AND TESTED IN ACCORDANCE WITH THE 2010 FLORIDA BUILDING CODE, FOR USE WITHIN AND OUTSIDE THE HIGH VELOCITY HURRICANE ZONE, PER TAS 201, 202, AND 203 STANDARDS.
2. NO 33-1/3% INCREASE IN ALLOWABLE STRESS HAS BEEN USED IN THE DESIGN OF THIS SYSTEM. WIND LOAD DURATION FACTOR Cd=1.6 HAS BEEN USED FOR WOOD ANCHOR DESIGN.
3. POSITIVE AND NEGATIVE DESIGN PRESSURES CALCULATED FOR USE WITH THIS SYSTEM SHALL BE DETERMINED BY OTHERS ON A JOB-SPECIFIC BASIS IN ACCORDANCE WITH THE GOVERNING CODE.
4. THE SYSTEM DETAILED HEREIN IS GENERIC AND DOES NOT PROVIDE INFORMATION FOR A SPECIFIC SITE. FOR SITE CONDITIONS DIFFERENT FROM THE CONDITIONS DETAILED HEREIN WITHIN THE HVHZ, A ONE-TIME SITE-SPECIFIC NOTICE OF ACCEPTANCE SHALL BE APPLIED FOR AND SECURED FROM THE MIAMI-DADE BUILDING CODE COMPLIANCE OFFICE PRODUCT CONTROL DIVISION. FOR SITE CONDITIONS DIFFERENT FROM THE CONDITIONS DETAILED HEREIN OUTSIDE THE HVHZ, THE BUILDING OFFICIAL MAY REQUIRE A ONE-TIME SITE-SPECIFIC NOTICE OF ACCEPTANCE BE OBTAINED, OR THAT SITE SPECIFIC DOCUMENTS BE PREPARED, SIGNED, DATED AND SEALED BY A LICENSED ENGINEER OR REGISTERED ARCHITECT, WHICH DETAIL AND JUSTIFY THE DEVIATION.
5. PERMIT HOLDER SHALL VERIFY THE ADEQUACY OF THE EXISTING STRUCTURE TO WITHSTAND SUPERIMPOSED LOADS. WOOD BUCKS (BY OTHERS) SHALL BE ANCHORED PROPERLY TO TRANSFER LOADS TO THE EXISTING STRUCTURE.
6. ALL EXTRUSIONS SHALL BE 6063-T5 ALUMINUM ALLOY, UNLESS NOTED OTHERWISE.
7. EXTERIOR SEAM OF FRAME CORNERS SHALL BE SEALED WITH SILICONE.
8. ALL BOLTS & WASHERS SHALL BE ZINC COATED STEEL, GALVANIZED STEEL, OR STAINLESS STEEL WITH A MINIMUM TENSILE YIELD STRENGTH OF 60 KSI. ALL 3/16"Ø OR 1/4"Ø POP RIVETS SHALL BE 5056-H32 ALUMINUM ALLOY OR STRONGER UNLESS OTHERWISE NOTED.
9. ALL STEEL IN CONTACT WITH ALUMINUM SHALL BE PAINTED OR PLATED AS PRESCRIBED IN THE ABOVE-NOTED BUILDING CODE.

PRODUCT REVISED
in complying with the Florida Building Code
Acceptance No 12-0403.06
Expiration Date MAR 17 2015
By Shaq I. Chung
Miami Dade Product Control

FRANK L. BENNARDO, P.E.
PE0046549
STATE OF FLORIDA
PROFESSIONAL ENGINEER
FRANK L. BENNARDO
No. 46549
03/27/2012

ENGINEERING EXPRESS®
160 SW 12th AVENUE, #106
DEERFIELD BEACH, FL 33442
Ph: (954) 354-0660 FAX: (954) 354-0443
WWW.ENGEXP.COM
CERT OF AUTH #9985
A. FRANK L. BENNARDO, P.E., INC. INNOVATION

RECORD-USA
4324 HARGETT COURT
MONROE, NC 28110
(704) 289 - 9212

SERIES 5400 ALUMINUM AUTOMATIC SLIDING GLASS DOORS
LARGE MISSILE IMPACT RESISTANT
MIAMI-DADE NOTICE OF ACCEPTANCE

REMARKS	DRWN	CHKD	DATE
INIT ISSUE	AML	KL	06/28/09
REV. PER BCCO COMMENT	KL	FLB	12/01/09
2010 FBC	KL	FLB	03/19/12

09-REU-0001

SCALE: - 02

PAGE DESCRIPTION:
-
-

23

1

03/27/2012 - 11:43am keithl F:\01 Project Files\Record-USA (REU)\2009\09-REU-0001 5400 LMI HR Sliders\09-REU-0001_02a 5400 LMI HR Sliders (NOA) - Revised Per Comments.dwg

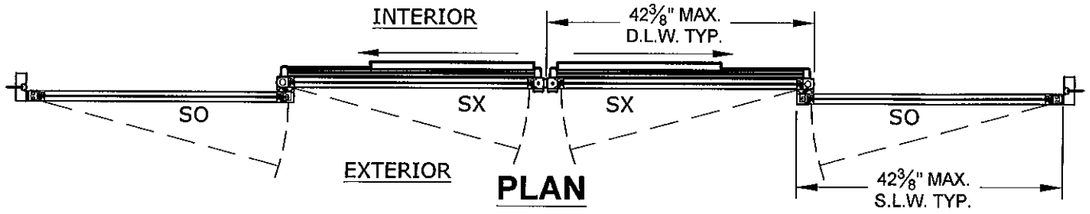

PLAN

ANCHORS PER
ANCHOR SCHEDULE.

INTERIOR:
ADAMS RITE G86 CONCEALED VERTICAL ROD EXIT DEVICE EXTENDING A ⅜" STEEL HEX BOLT UPWARD INTO DOOR CATCH ASSEMBLY AND A ½" STAINLESS STEEL HEX BOLT DOWNWARD IN THRESHOLD ASSEMBLY

EXTERIOR:
ADAMS RITE 8651 ESCUTCHEON WITH INTERNATIONAL DOOR CLOSER, INC. CZ-1001 MORTISE KEY CYLINDER TYP. BOTH SX PANELS

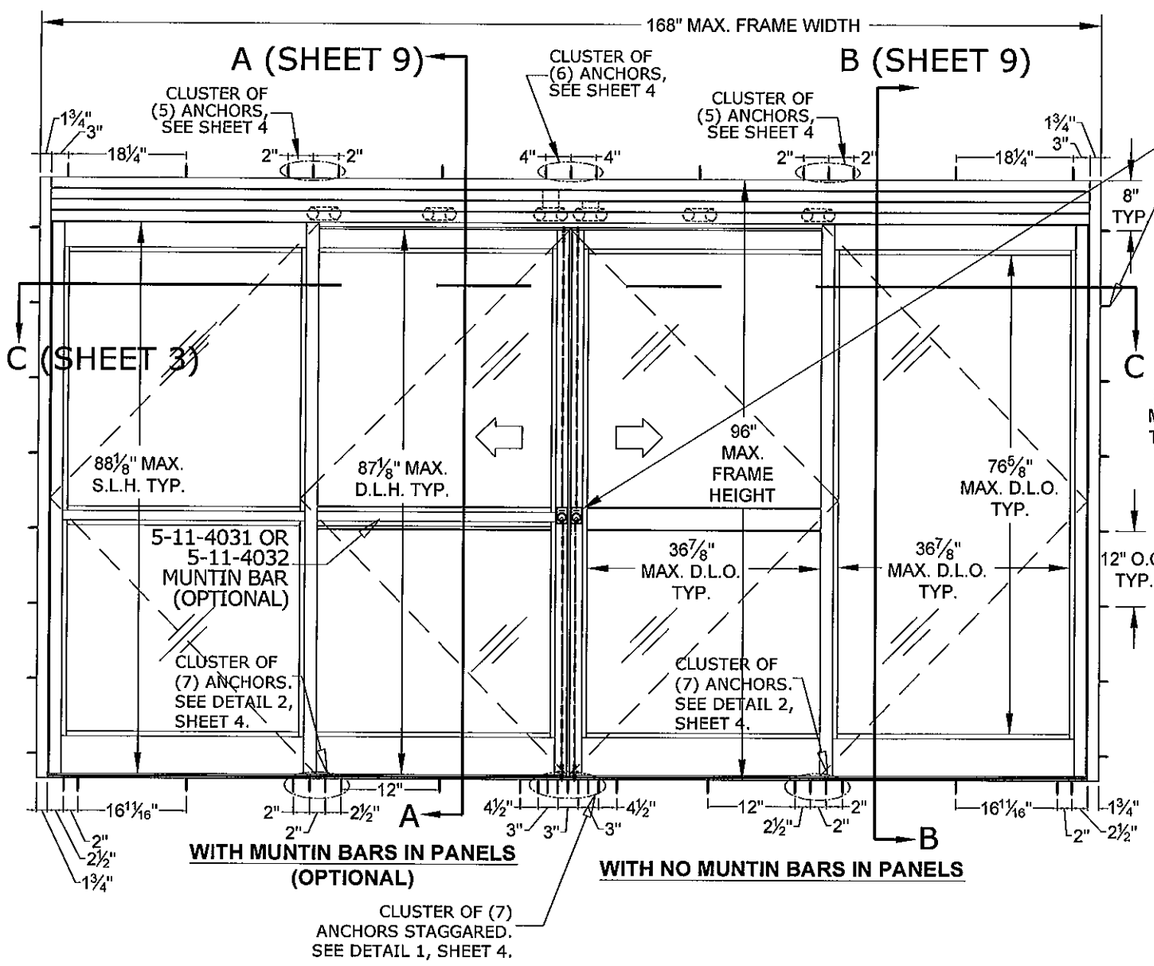

EXTERIOR ELEVATION
SO-SX-SX-SO

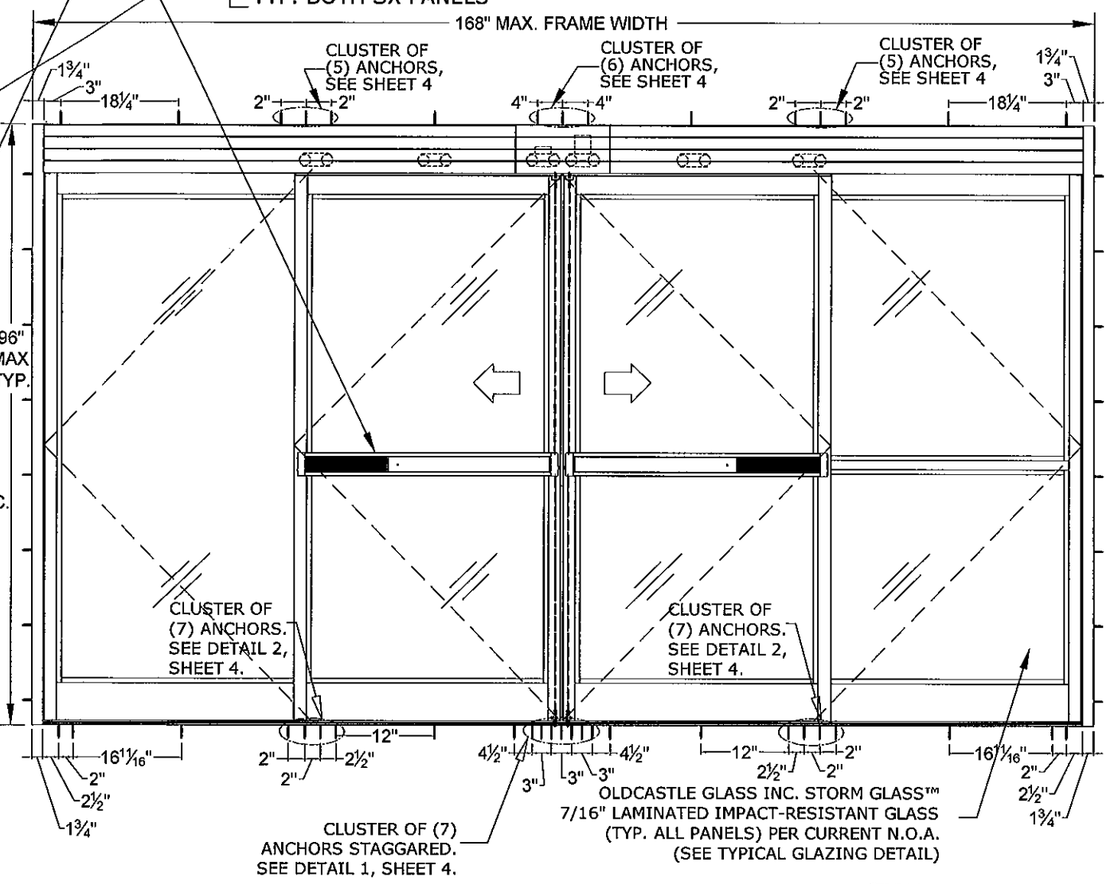

INTERIOR ELEVATION
SO-SX-SX-SO

DESIGN PRESSURE RATING		IMPACT RATING
POSITIVE	+65 PSF	LARGE AND SMALL MISSILE IMPACT
NEGATIVE	-70 PSF	
NOTE: THIS SYSTEM WAS NOT TESTED FOR WATER INFILTRATION AND IS TO BE INSTALLED ONLY WHERE THE WATER REQUIREMENT IS NOT NEEDED.		

NOTE: SEE SHEET 4 FOR ANCHOR LAYOUT DETAILS AND ANCHOR TYPES.

PRODUCT REVISED
In complying with the Florida Building Code
Acceptance No 12-0403.06
Expiration Date 3/7/12
By Ishaq I. Chanda
Miami Dade Product Control

FRANK L. BENNARDO, P.E.
LICENSE No 46549
03/27/2012
STATE OF FLORIDA
PROFESSIONAL ENGINEER

ENGINEERING EXPRESS®
160 SW 12th AVENUE, SUITE 106
DEERFIELD BEACH, FL 33442
PH: (954) 354-0660 FAX: (954) 354-0443
WWW.ENGEXP.COM
CERT OF AUTH #9985
A FRANK L. BENNARDO, P.E., INC. INNOVATION

RECORD-USA
4324 HARGETT COURT
MONROE, NC 28110
(704) 289 - 9212

SERIES 5400 ALUMINUM AUTOMATIC SLIDING GLASS DOORS
LARGE MISSILE IMPACT RESISTANT
MIAMI-DADE NOTICE OF ACCEPTANCE

REMARKS	DRWN	CHKD	DATE
INIT ISSUE	AML	KL	06/26/09
REV. PER BCCO COMMENT	KL	FLB	12/01/09
2010 FBC	KL	FLB	03/19/12

09-REU-0001
SCALE: - 02
PAGE DESCRIPTION:
-
-

23

2

03/27/2012 - 11:43am keithl F:\01 Project Files\Record-USA (REU)\2009\09-REU-0001 5400 LMI HR Sliders\09-REU-0001_02a 5400 LMI HR Sliders (NOA) - Revised Per Comments.dwg

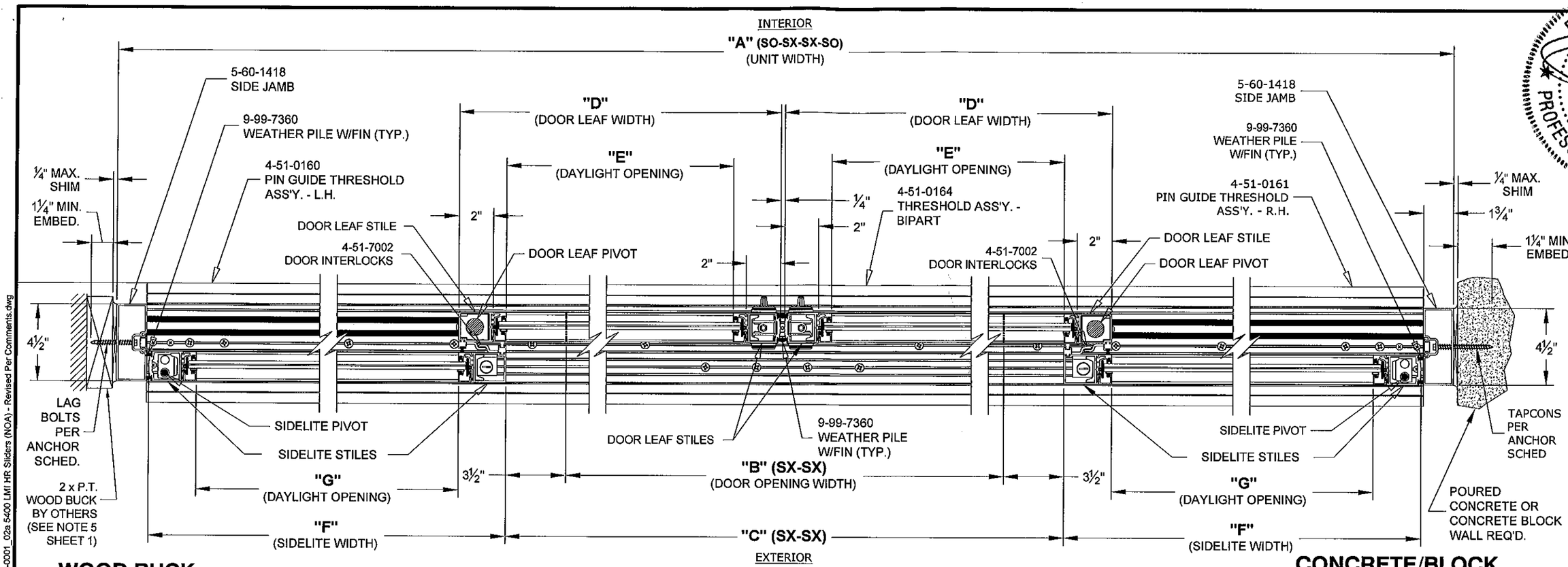

WOOD BUCK ALTERNATIVE

SECTION C-C

CONCRETE/BLOCK ALTERNATIVE

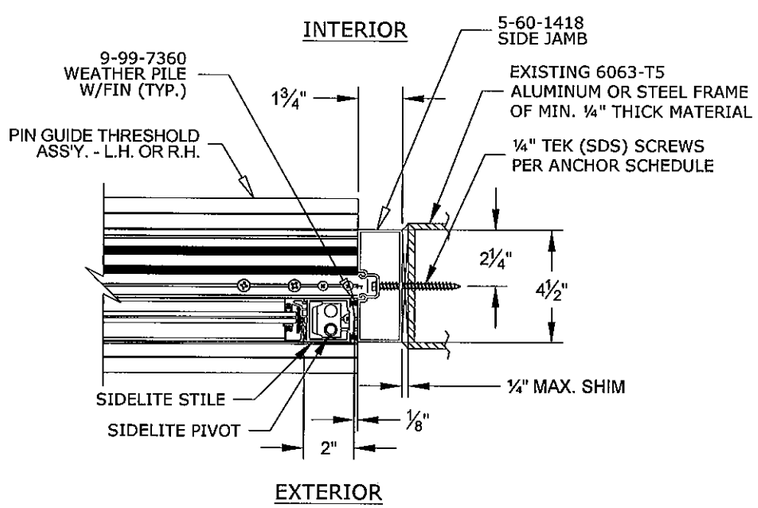

METAL STRUCTURE ALTERNATIVE

UNIT WIDTH "A" (SO-SX-SX-SO)	DOOR OPENING WIDTH "B" (SX-SX)	DIMENSION "C" (SX-SX)	DOOR LEAF SIZE		DAYLIGHT OPENING (DOOR LEAF)		SIDELITE SIZE		DAYLIGHT OPENING (SIDELITE)		UNIT HEIGHT (MAX.)	ROUGH OPENING WIDTH (INCL. ¼" SHIM SPACE BOTH SIDES) (SO-SX-SX-SO)
			WIDTH "D"	HEIGHT	WIDTH "E"	HEIGHT	WIDTH "F"	HEIGHT	WIDTH "G"	HEIGHT		
9' 0"	42½"	49½"	27⅜"	87⅛"	21⅞"	76⅝"	27⅜"	88⅛"	21⅞"	76⅝"	8' 0"	9' ½"
10' 0"	48½"	55½"	30⅜"	87⅛"	24⅞"	76⅝"	30⅜"	88⅛"	24⅞"	76⅝"	8' 0"	10' ½"
12' 0"	60½"	67½"	36⅜"	87⅛"	30⅞"	76⅝"	36⅜"	88⅛"	30⅞"	76⅝"	8' 0"	12' ½"
14' 0"	72½"	79½"	42⅜"	87⅛"	36⅞"	76⅝"	42⅜"	88⅛"	36⅞"	76⅝"	8' 0"	14' ½"

NOTE: DOOR WIDTH AND HEIGHT SHALL COMPLY WITH THE MINIMUM REQUIREMENTS OF THE FLORIDA BUILDING CODE.

PRODUCT REVISED
in complying with the Florida
Building Code
Acceptance No. 12-0403.06
Expiration Date 3/17/15
By [signature]
Miami Dade Product Control

FRANK L. BENNARDO, P.E.
LICENSE No. 34543
STATE OF FLORIDA
PROFESSIONAL ENGINEER
03/26/2012
ENGINEERING EXPRESS, INC.
160 SW 12th AVENUE #106
DEERFIELD BEACH, FL 33442
PH: (954) 354-0660 FAX: (954) 354-0943
WWW.ENGEXP.COM
CERT OF AUTH #8985
A. FRANK L. BENNARDO, P.E., INC. INNOVATION

RECORD-USA
4324 HARGETT COURT
MONROE, NC 28110
(704) 289 - 9212

SERIES 5400 ALUMINUM AUTOMATIC SLIDING GLASS DOORS
LARGE MISSILE IMPACT RESISTANT
MIAMI-DADE NOTICE OF ACCEPTANCE

REMARKS	DRWN	CHKD	DATE
INIT ISSUE	AML	KL	06/26/09
REV. PER BOCO COMMENT	KL	FLB	12/01/09
2010 FBC	KL	FLB	03/19/12

09-REU-0001
SCALE: - 02
PAGE DESCRIPTION:
-
-

23

3

F:\01 Project Files\Record-USA (REU)\2009\09-REU-0001 5400 LMI HR Sliders\09-REU-0001_02a 5400 LMI HR Sliders (NOA) - Revised Per Comments.dwg
03/27/2012 - 11:43am keithl

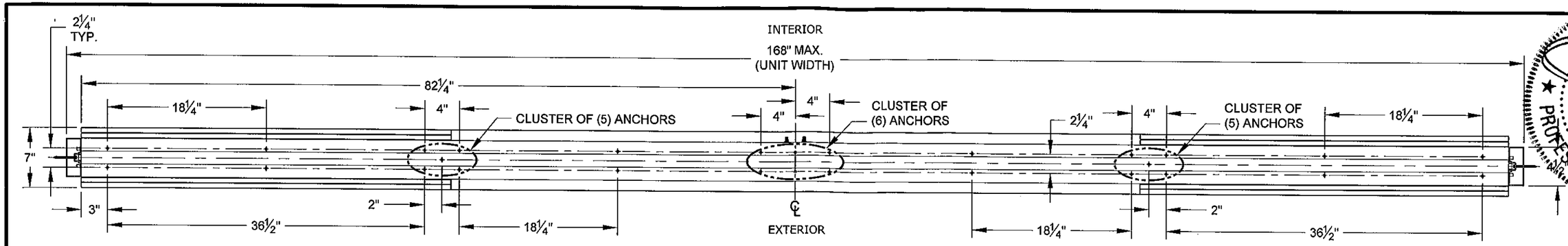

ANCHOR LAYOUT AT HEADER (SO-SX-SX-SO)

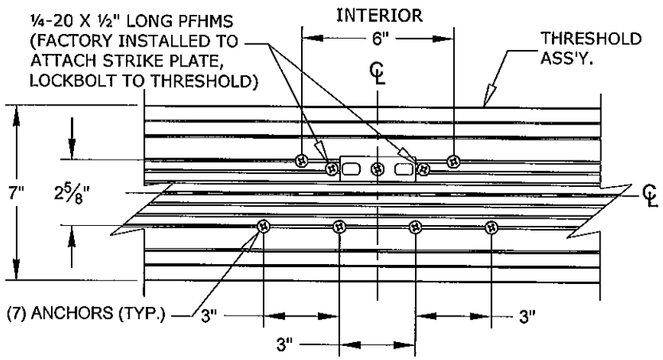

DETAIL 1

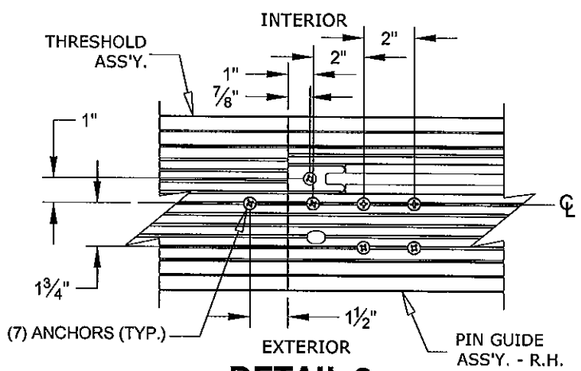

DETAIL 2

ANCHOR SCHEDULE		
LOCATION	SUBSTRATE	ANCHOR TYPE
HEAD	CONCRETE (3192 PSI MIN) OR CONCRETE BLOCK	1/4" ITW TAPCONS W/ 1-1/4" MIN. EMBEDMENT AND 2-1/2" MIN. EDGE DISTANCE
	WOOD (G=0.55 MIN)	#14 WOOD SCREWS W/ 1-1/2" MIN. THREAD PENETRATION AND 1" MIN. EDGE DISTANCE
	1/4" MINIMUM 6063-T5 ALUMINUM OR STEEL	1/4" 316 STAINLESS STEEL SELF DRILLING SCREWS W/ 1/2" MIN. EDGE DISTANCE
JAMBS	CONCRETE (3192 PSI MIN) OR CONCRETE BLOCK	1/4" ITW TAPCONS W/ 1-1/4" MIN. EMBEDMENT AND 2-1/2" MIN. EDGE DISTANCE
	WOOD (G=0.55 MIN)	#14 WOOD SCREWS W/ 1-1/2" MIN. THREAD PENETRATION AND 1" MIN. EDGE DISTANCE
	1/4" MINIMUM 6063-T5 ALUMINUM OR STEEL	1/4" 316 STAINLESS STEEL SELF DRILLING SCREWS W/ 1/2" MIN. EDGE DISTANCE
SILL	CONCRETE (3192 PSI MIN) OR CONCRETE BLOCK	1/4" ITW TAPCONS W/ 1-1/2" MIN. EMBEDMENT AND 2-1/2" MIN. EDGE DISTANCE
	WOOD (G=0.55 MIN)	1/4" ITW TAPCONS W/ 1-1/2" MIN. THREAD PENETRATION AND 3/4" MIN. EDGE DISTANCE
	1/4" MINIMUM 6063-T5 ALUMINUM OR STEEL	1/4" 316 STAINLESS STEEL SELF DRILLING SCREWS W/ 1/2" MIN. EDGE DISTANCE

NOTE: FOR SO-SX OR SX-SO ANCHOR LAYOUTS, SEE SHEET 8.

ANCHOR NOTES:

1. SEE EXTERIOR ELEVATIONS AND ANCHOR LAYOUT DETAILS FOR ANCHOR LOCATIONS AND/OR SPACING.
2. ANCHORS SHALL BE INSTALLED IN ACCORDANCE WITH MANUFACTURERS' RECOMMENDATIONS.
3. ENSURE MINIMUM 2-1/2" EDGE DISTANCE FOR ALL ANCHORS TO CONCRETE & TO CONCRETE BLOCK. EDGE DISTANCE OF 1/2" IS ACCEPTABLE FOR ANCHORS TO STEEL OR ALUMINUM.
4. WHERE ANCHORS FASTEN TO NARROW FACE OF STUD FRAMING, ANCHOR SHALL BE LOCATED IN CENTER OF NOMINAL 2x (MIN) WOOD STUD (i.e. 3/4" EDGE DISTANCE IS ACCEPTABLE FOR ANCHORS TO WOOD FRAMING).
5. WOOD HOST STRUCTURE SHALL BE "SOUTHERN PINE" G=0.55 OR GREATER DENSITY.
6. ANCHOR REQUIREMENTS AS SHOWN HEREIN, INCLUDING MINIMUM EMBEDMENT AND EDGE DISTANCE, EXCLUDES STUCCO, FOAM, BRICK, AND OTHER WALL FINISHES. FOR SITE CONDITIONS DIFFERENT FROM THE CONDITIONS DETAILED HEREIN WITHIN THE HVHZ, A ONE-TIME SITE-SPECIFIC NOTICE OF ACCEPTANCE SHALL BE APPLIED FOR AND SECURED FROM THE MIAMI-DADE BUILDING CODE COMPLIANCE OFFICE PRODUCT CONTROL DIVISION. FOR SITE CONDITIONS DIFFERENT FROM THE CONDITIONS DETAILED HEREIN OUTSIDE THE HVHZ, THE BUILDING OFFICIAL MAY REQUIRE A ONE-TIME SITE-SPECIFIC NOTICE OF ACCEPTANCE BE OBTAINED, OR THAT SITE SPECIFIC DOCUMENTS BE PREPARED, SIGNED, DATED AND SEALED BY A LICENSED ENGINEER OR REGISTERED ARCHITECT, WHICH DETAIL AND JUSTIFY THE DEVIATION.
7. WHERE EXISTING STRUCTURE IS WOOD FRAMING, EXISTING CONDITIONS MAY VARY. FIELD VERIFY THAT FASTENERS ARE INTO ADEQUATE WOOD FRAMING MEMBERS, NOT INTO PLYWOOD.
8. WOOD BUCKS (BY OTHERS) SHALL BE ANCHORED PROPERLY TO TRANSFER LOADS TO THE EXISTING STRUCTURE.
9. SELF DRILLING SCREWS SCREWS SHALL BE INSTALLED WITH FULL ENGAGEMENT OF THREADS INTO METAL HOST STRUCTURE AND MAY HAVE EITHER A FLAT HEAD, PAN HEAD, TRUSS HEAD, OR OTHER HEAD STYLES.

PRODUCT REVISED
as complying with the Florida Building Code
Acceptance No. 12-0403.06
Expiration Date 3/17/15
By Miami Dade Product Control

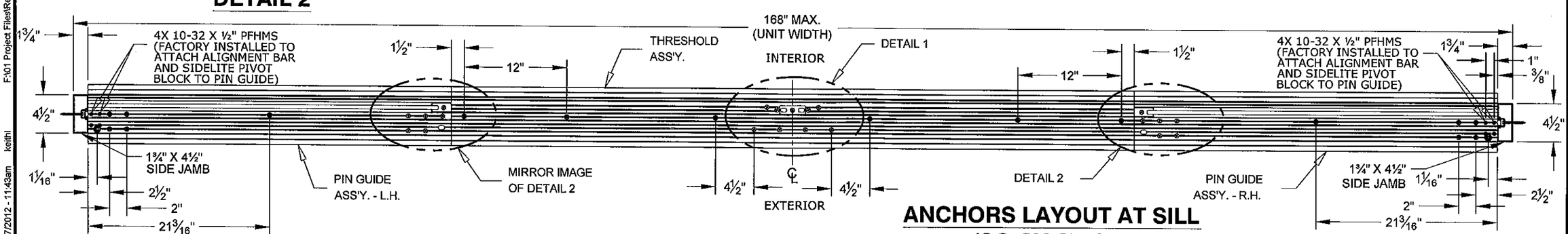

ANCHORS LAYOUT AT SILL (SO-SX-SX-SO)

FRANK L. BENNARDO, P.E.
LICENSE No. 46549
STATE OF FLORIDA
ENGINEERING EXPRESS, INC.
160 SW 12th AVENUE
DEERFIELD BEACH, FL 33442
Ph: (954) 354-0660 Fax: (954) 354-0943
WWW.ENGEXP.COM
CERT OF AUTH #8605
A. FRANK L. BENNARDO, P.E., INC. INNOVATION

RECORD-USA
4324 HARGETT COURT
MONROE, NC 28110
(704) 289 - 9212

SERIES 5400 ALUMINUM AUTOMATIC SLIDING GLASS DOORS
LARGE MISSILE IMPACT RESISTANT
MIAMI-DADE NOTICE OF ACCEPTANCE

REMARKS	DRWN	CHKD	DATE
INIT ISSUE	AML	KL	06/26/09
REV. PER BOCO COMMENT	KL	FLB	12/01/09
2010 FBC	KL	FLB	03/19/12

09-REU-0001
SCALE: - 02
PAGE DESCRIPTION:
23
4

F:\01 Project Files\Record-USA (REU)\2009\09-REU-0001 5400 LMI HR Sliders\09-REU-0001_02a 5400 LMI HR Sliders (NOA) - Revised Per Comments.dwg
03/27/2012 - 11:43am keithl

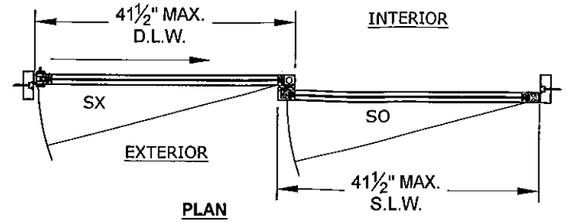

PLAN

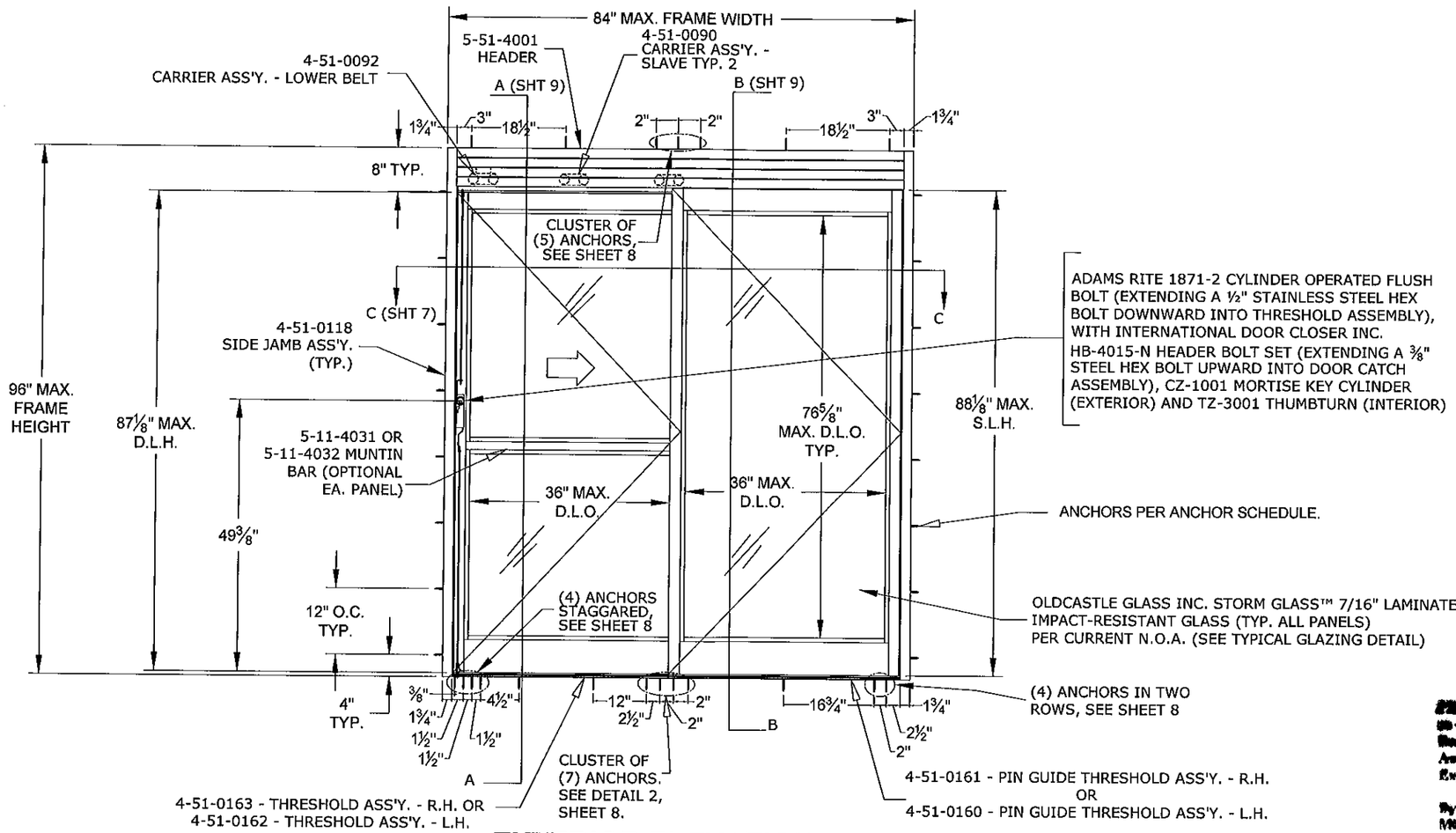

EXTERIOR ELEVATION

5405 SX-SO R.H. SHOWN
5404 SO-SX L.H. OPPOSITE

	DESIGN PRESSURE RATING	IMPACT RATING
POSITIVE	+65 PSF	LARGE AND SMALL MISSILE IMPACT
NEGATIVE	-70 PSF	
NOTE: THIS SYSTEM WAS NOT TESTED FOR WATER INFILTRATION AND IS TO BE INSTALLED ONLY WHERE THE WATER REQUIREMENT IS NOT NEEDED.		

NOTE: SEE SHEET 8 FOR ANCHOR LAYOUT DETAILS AND ANCHOR TYPES.

PRODUCT APPROVED
as complying with the Florida
Building Code
Acceptance No. 12-0403.06
Expiration Date: 3/17/15
By: Shaun L. Chandler
Miami-Dade Approval

FRANK L. BENNARDO, P.E.
#PE0046549
LICENSE
No. 46549
03/26/2012
STATE OF FLORIDA
PROFESSIONAL ENGINEER
ENGINEERING EXPRESS
160 SW 12th AVENUE
DEERFIELD BEACH, FL 33442
Ph: (954) 354-0660 Fax: (954) 354-0662
WWW.ENGEXP.COM
CERT OF AUTH #9885
A FRANK L. BENNARDO, P.E., INC. INNOVATION

RECORD-USA
4324 HARGETT COURT
MONROE, NC 28110
(704) 289 - 9212

SERIES 5400 ALUMINUM AUTOMATIC SLIDING GLASS DOORS
LARGE MISSILE IMPACT RESISTANT
MIAMI-DADE NOTICE OF ACCEPTANCE

REMARKS	DRWN	CHKD	DATE
INIT ISSUE	AML	KL	06/26/09
REV. PER BCCO COMMENT	KL	FLB	12/01/09
2010 FBC	KL	FLB	03/19/12

09-REU-0001
SCALE: - 02
PAGE DESCRIPTION:
-
-

23

5

03/27/2012 - 11:43am keithl F:\01 Project Files\Record-USA (REU)\2009\09-REU-0001 5400 LMI HR Sliders\09-REU-0001_02a 5400 LMI HR Sliders (NOA) - Revised Per Comments.dwg

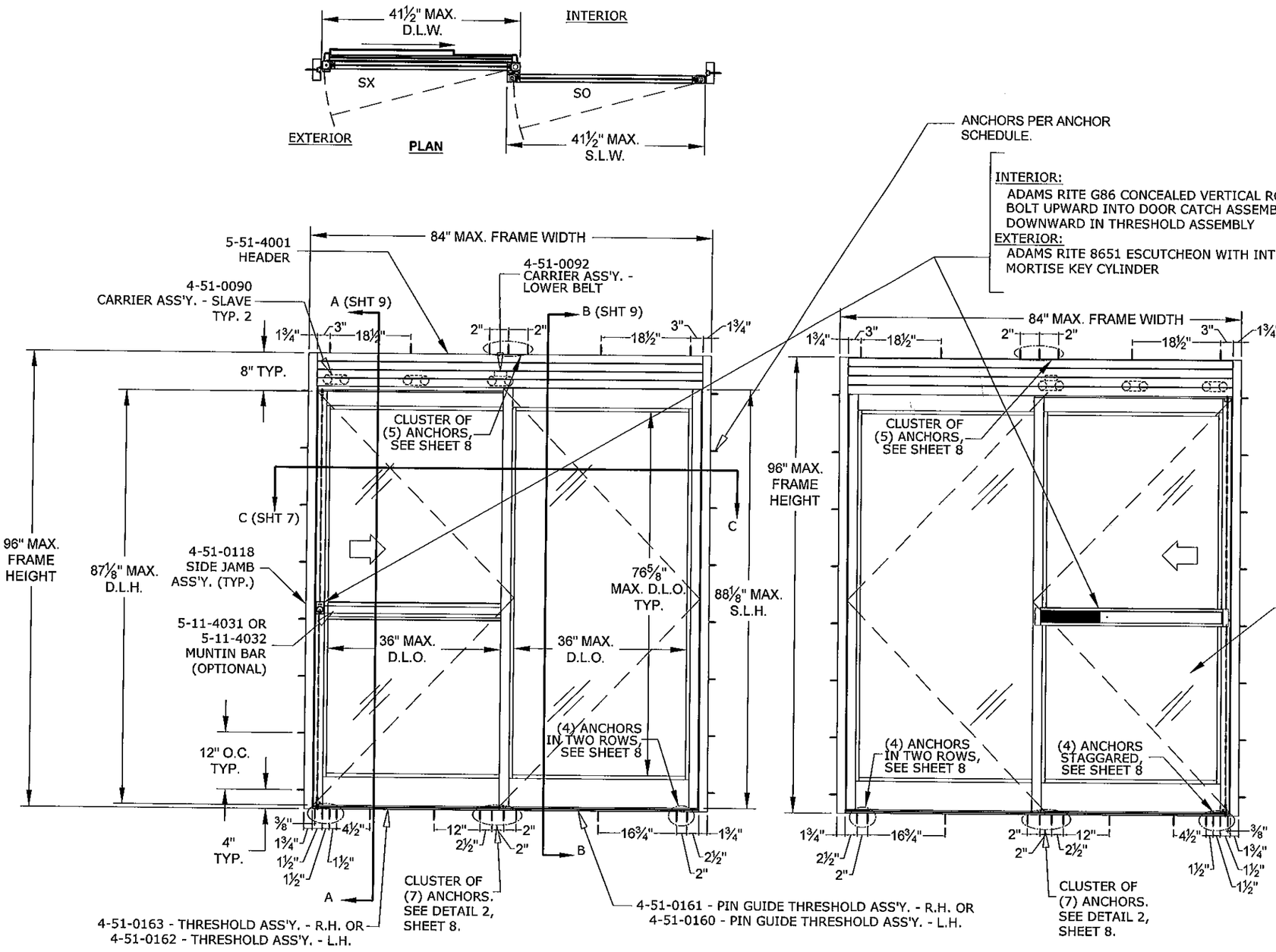

EXTERIOR ELEVATION

5405 SX-SO R.H. SHOWN
5404 SO-SX L.H. OPPOSITE

DESIGN PRESSURE RATING		IMPACT RATING
POSITIVE	+65 PSF	LARGE AND SMALL MISSILE IMPACT
NEGATIVE	-70 PSF	
NOTE: THIS SYSTEM WAS NOT TESTED FOR WATER INFILTRATION AND IS TO BE INSTALLED ONLY WHERE THE WATER REQUIREMENT IS NOT NEEDED.		

NOTE: SEE SHEET 8 FOR ANCHOR LAYOUT DETAILS AND ANCHOR TYPES.

PRODUCT REVISED
in complying with the Florida Building Code
Acceptance No 12-0403.06
Expiration Date 3/7/15
By Isheng L. Chan
Miami Dade Product Control

FRANK L. BENNARDO, P.E.
LICENSE No. 46540
STATE OF FLORIDA
03/27/2012

ENGINEERING EXPRESS
160 SW 12th AVENUE
DEERFIELD BEACH, FL 33442
Ph: (954) 354-0660 Fax: (954) 354-0443
WWW.ENGEXP.COM
CERT OF AUTH #6685
A FRANK L. BENNARDO, P.E., INC. INNOVATION

RECORD-USA
4324 HARGETT COURT
MONROE, NC 28110
(704) 289 - 9212

SERIES 5400 ALUMINUM AUTOMATIC SLIDING GLASS DOORS
LARGE MISSILE IMPACT RESISTANT
MIAMI-DADE NOTICE OF ACCEPTANCE

REMARKS	DRWN	CHKD	DATE
INIT ISSUE	AML	KL	06/26/09
REV. PER BCCO COMMENT	KL	FLB	12/01/09
2010 FBC	KL	FLB	03/19/12

09-REU-0001
SCALE: - 02
PAGE DESCRIPTION:
-
-

23

6

F:\01 Project Files\Record-USA (REU)\2009\09-REU-0001 5400 LMI HR Sliders\09-REU-0001_02a 5400 LMI HR Sliders (NOA) - Revised Per Comments.dwg
03/27/2012 - 11:43am keithl

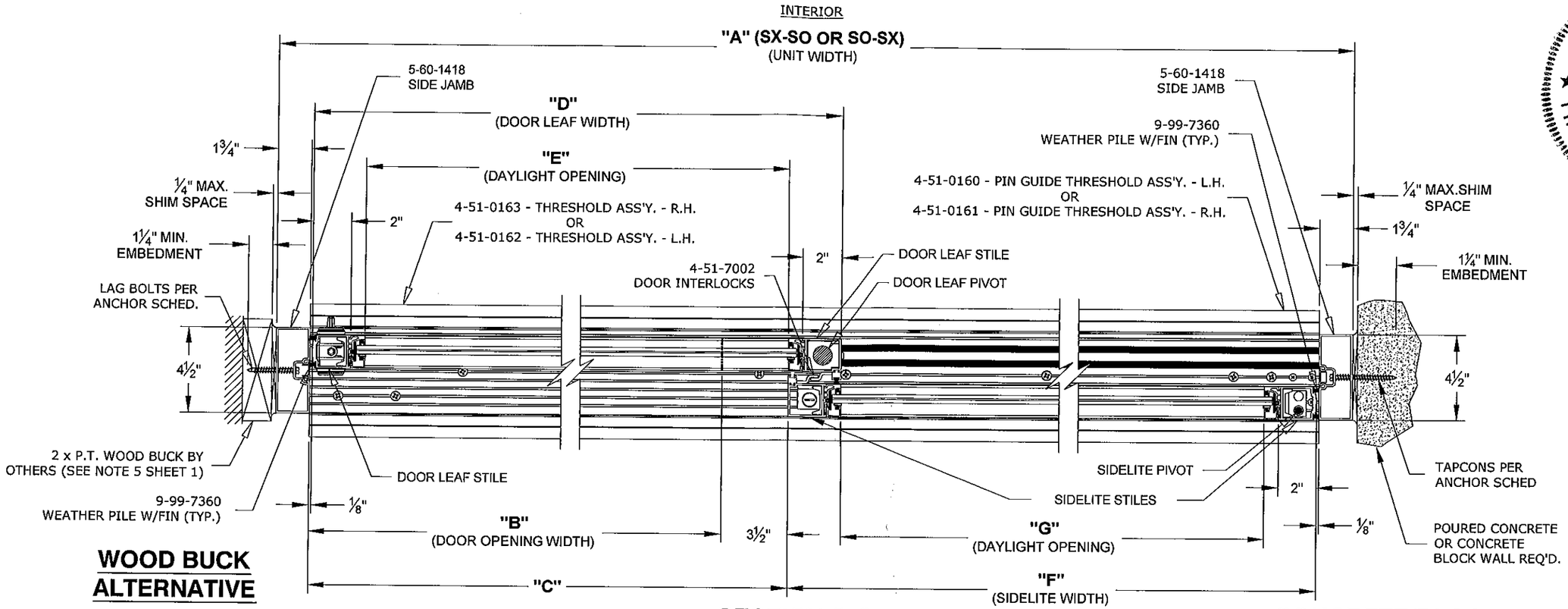

WOOD BUCK ALTERNATIVE

SECTION C-C
5405 SX-SO R.H. SHOWN
5404 SO-SX L.H. OPPOSITE

CONCRETE/BLOCK ALTERNATIVE

NOTE: SEE ELEVATIONS ON SHEET 6 AND ANCHOR DETAILS ON SHEET 8.

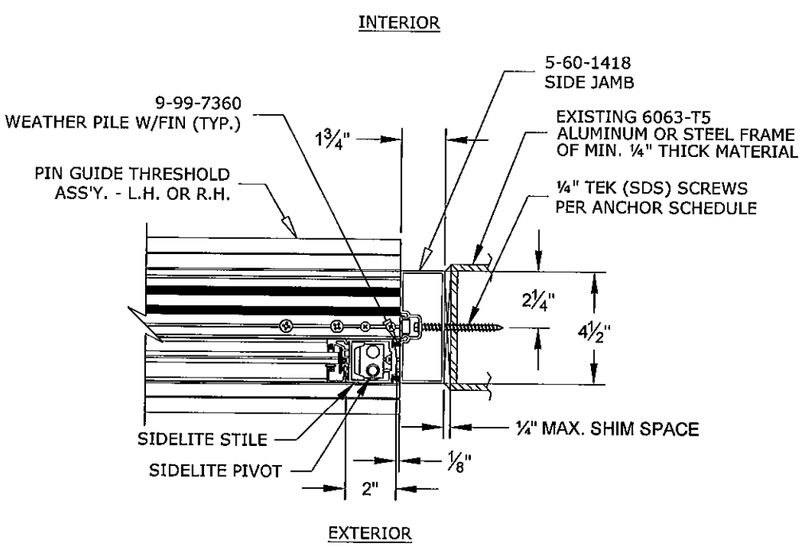

METAL STRUCTURE ALTERNATIVE

UNIT WIDTH "A" (SX-SO OR SO-SX)	DOOR OPENING WIDTH "B"	DIMENSION "C"	DOOR LEAF SIZE		DAYLIGHT OPENING (DOOR LEAF)		SIDELITE SIZE		DAYLIGHT OPENING (SIDELITE)		UNIT HEIGHT (MAX.)	ROUGH OPENING WIDTH (INCL. ¼" SHIM SPACE BOTH SIDES)
			WIDTH "D"	HEIGHT	WIDTH "E"	HEIGHT	WIDTH "F"	HEIGHT	WIDTH "G"	HEIGHT		
6' 6"	32⅜"	36"	38½"	87⅛"	33"	76⅝"	38½"	88⅛"	33"	76⅝"	8' 0"	6' 6½"
7' 0"	35⅜"	39"	41½"	87⅛"	36"	76⅝"	41½"	88⅛"	36"	76⅝"	8' 0"	7' ½"

NOTE: DOOR WIDTH AND HEIGHT SHALL COMPLY WITH THE MINIMUM REQUIREMENTS OF THE FLORIDA BUILDING CODE.

PRODUCT REVISED
as complying with the Florida
Building Code
Acceptance No. 12-0403.06
Expiration Date 3/17/15
By Ishaq I. Chauk
Miami Dade Product Control

FRANK L. BENNARDO, P.E.
PE0046549
LICENSE
No. 46549
STATE OF FLORIDA
PROFESSIONAL ENGINEER
03/27/2012

ENGINEERING EXPRESS
160 SW 12th AVENUE, #106
DEERFIELD BEACH, FL 33442
PH: (954) 354-0660 FAX: (954) 354-0443
WWW.ENGEXP.COM
CERT OF AUTH #9885
A FRANK L. BENNARDO, P.E., INC. INNOVATION

RECORD-USA
4324 HARGETT COURT
MONROE, NC 28110
(704) 289 - 9212

SERIES 5400 ALUMINUM AUTOMATIC SLIDING GLASS DOORS
LARGE MISSILE IMPACT RESISTANT
MIAMI-DADE NOTICE OF ACCEPTANCE

REMARKS	DRWN	CHKD	DATE
INIT ISSUE	AML	KL	06/26/09
REV. PER BCCO COMMENT	KL	FLB	12/01/09
2010 FBC	KL	FLB	03/19/12

09-REU-0001
SCALE: - 02
PAGE DESCRIPTION:

F:\01 Project Files\Record-USA (REU)\2009\09-REU-0001 5400 LMI HR Sliders\09-REU-0001_02a 5400 LMI HR Sliders (NOA) - Revised Per Comments.dwg
03/27/2012 - 11:43am keithl

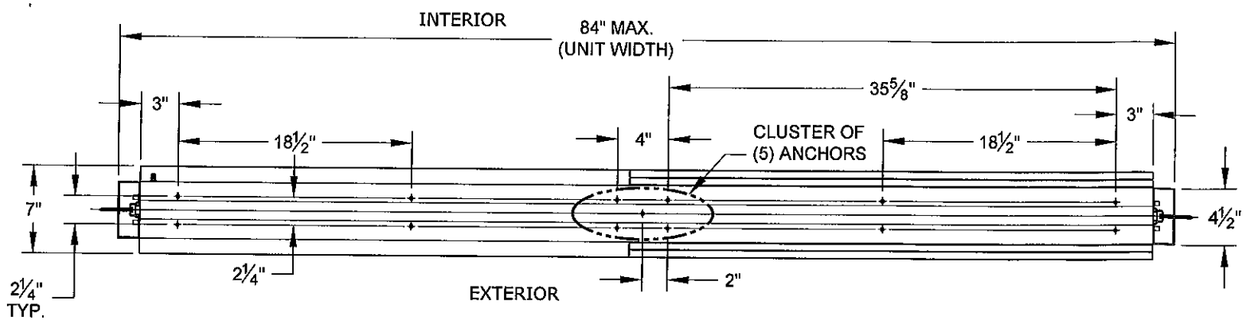

ANCHOR LAYOUT AT HEADER
(TYP. FOR SO-SX OR SX-SO)

ANCHOR SCHEDULE

LOCATION	SUBSTRATE	ANCHOR TYPE
HEAD	CONCRETE (3192 PSI MIN) OR CONCRETE BLOCK	1/4" ITW TAPCONS W/ 1-1/4" MIN. EMBEDMENT AND 2-1/2" MIN. EDGE DISTANCE
	WOOD (G=0.55 MIN)	#14 WOOD SCREWS W/ 1-1/2" MIN. THREAD PENETRATION AND 1" MIN. EDGE DISTANCE
	1/4" MINIMUM 6063-T5 ALUMINUM OR STEEL	1/4" 316 STAINLESS STEEL SELF DRILLING SCREWS W/ 1/2" MIN. EDGE DISTANCE
JAMBS	CONCRETE (3192 PSI MIN) OR CONCRETE BLOCK	1/4" ITW TAPCONS W/ 1-1/4" MIN. EMBEDMENT AND 2-1/2" MIN. EDGE DISTANCE
	WOOD (G=0.55 MIN)	#14 WOOD SCREWS W/ 1-1/2" MIN. THREAD PENETRATION AND 1" MIN. EDGE DISTANCE
	1/4" MINIMUM 6063-T5 ALUMINUM OR STEEL	1/4" 316 STAINLESS STEEL SELF DRILLING SCREWS W/ 1/2" MIN. EDGE DISTANCE
SILL	CONCRETE (3192 PSI MIN) OR CONCRETE BLOCK	1/4" ITW TAPCONS W/ 1-1/2" MIN. EMBEDMENT AND 2-1/2" MIN. EDGE DISTANCE
	WOOD (G=0.55 MIN)	1/4" ITW TAPCONS W/ 1-1/2" MIN. THREAD PENETRATION AND 3/4" MIN. EDGE DISTANCE
	1/4" MINIMUM 6063-T5 ALUMINUM OR STEEL	1/4" 316 STAINLESS STEEL SELF DRILLING SCREWS W/ 1/2" MIN. EDGE DISTANCE

ANCHOR NOTES:

1. SEE EXTERIOR ELEVATIONS AND ANCHOR LAYOUT DETAILS FOR ANCHOR LOCATIONS AND/OR SPACING.
2. ANCHORS SHALL BE INSTALLED IN ACCORDANCE WITH MANUFACTURERS' RECOMMENDATIONS.
3. ENSURE MINIMUM 2-1/2" EDGE DISTANCE FOR ALL ANCHORS TO CONCRETE & TO CONCRETE BLOCK. EDGE DISTANCE OF 1/2" IS ACCEPTABLE FOR ANCHORS TO STEEL OR ALUMINUM.
4. WHERE ANCHORS FASTEN TO NARROW FACE OF STUD FRAMING, ANCHOR SHALL BE LOCATED IN CENTER OF NOMINAL 2x (MIN) WOOD STUD (i.e. 3/4" EDGE DISTANCE IS ACCEPTABLE FOR ANCHORS TO WOOD FRAMING).
5. WOOD HOST STRUCTURE SHALL BE "SOUTHERN PINE" G=0.55 OR GREATER DENSITY.
6. ANCHOR REQUIREMENTS AS SHOWN HEREIN, INCLUDING MINIMUM EMBEDMENT AND EDGE DISTANCE, EXCLUDES STUCCO, FOAM, BRICK, AND OTHER WALL FINISHES. FOR SITE CONDITIONS DIFFERENT FROM THE CONDITIONS DETAILED HEREIN WITHIN THE HVHZ, A ONE-TIME SITE-SPECIFIC NOTICE OF ACCEPTANCE SHALL BE APPLIED FOR AND SECURED FROM THE MIAMI-DADE BUILDING CODE COMPLIANCE OFFICE PRODUCT CONTROL DIVISION. FOR SITE CONDITIONS DIFFERENT FROM THE CONDITIONS DETAILED HEREIN OUTSIDE THE HVHZ, THE BUILDING OFFICIAL MAY REQUIRE A ONE-TIME SITE-SPECIFIC NOTICE OF ACCEPTANCE BE OBTAINED, OR THAT SITE SPECIFIC DOCUMENTS BE PREPARED, SIGNED, DATED AND SEALED BY A LICENSED ENGINEER OR REGISTERED ARCHITECT, WHICH DETAIL AND JUSTIFY THE DEVIATION.
7. WHERE EXISTING STRUCTURE IS WOOD FRAMING, EXISTING CONDITIONS MAY VARY. FIELD VERIFY THAT FASTENERS ARE INTO ADEQUATE WOOD FRAMING MEMBERS, NOT INTO PLYWOOD.
8. WOOD BUCKS (BY OTHERS) SHALL BE ANCHORED PROPERLY TO TRANSFER LOADS TO THE EXISTING STRUCTURE.
9. SELF DRILLING SCREWS SCREWS SHALL BE INSTALLED WITH FULL ENGAGEMENT OF THREADS INTO METAL HOST STRUCTURE AND MAY HAVE EITHER A FLAT HEAD, PAN HEAD, TRUSS HEAD, OR OTHER HEAD STYLES.

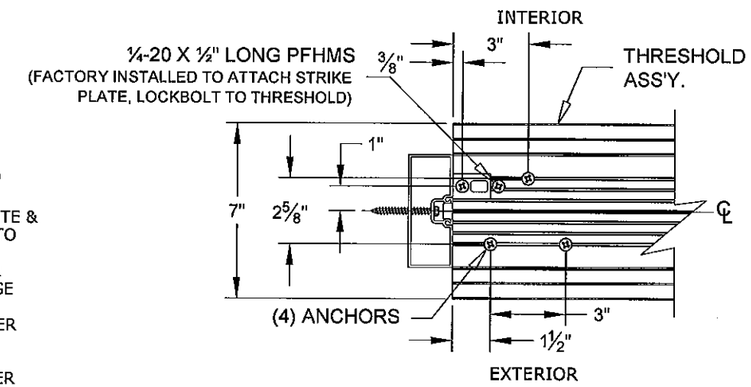

DETAIL 1

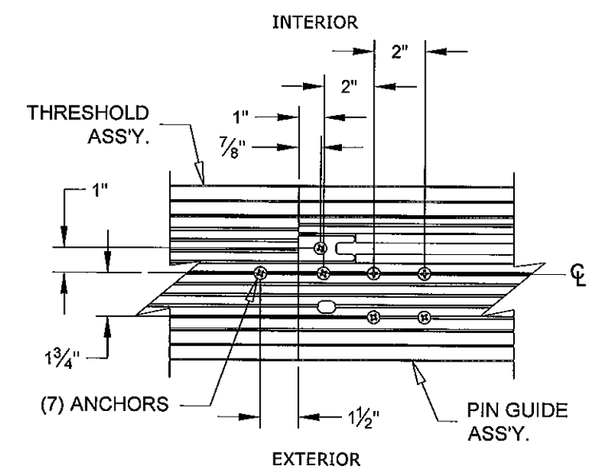

DETAIL 2

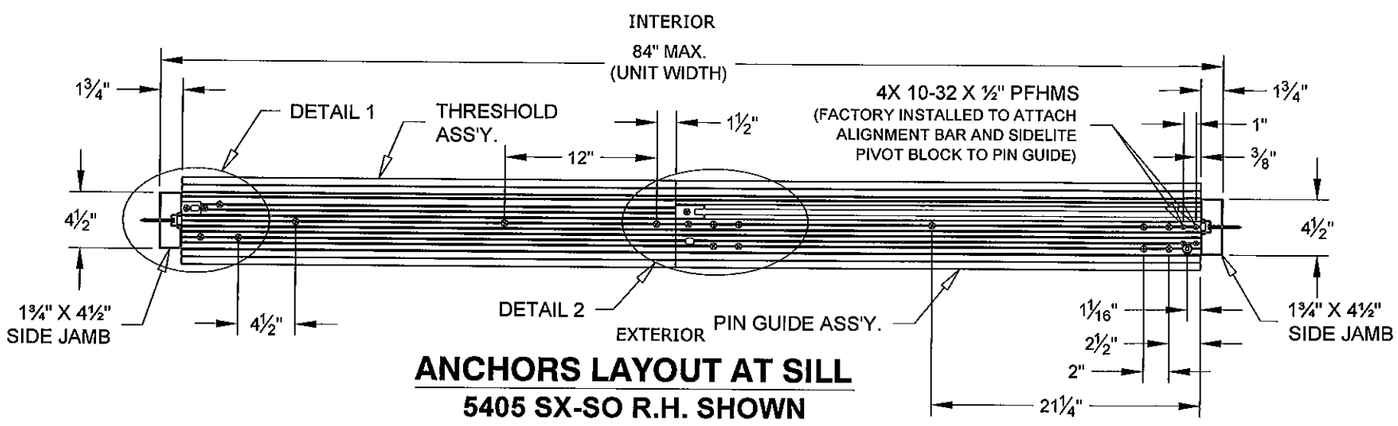

ANCHORS LAYOUT AT SILL
5405 SX-SO R.H. SHOWN
5404 SO-SX L.H. OPPOSITE

PRODUCT REVISED
as complying with the Florida
Building Code
Acceptance No 12-0403.06
Expiration Date 3/19/15
By Isha Lechuga
Miami Dade Product Control

FRANK L. BENNARDO, P.E.
LICENSE No. 43057
STATE OF FLORIDA
PROFESSIONAL ENGINEER
03/27/2012
ENGINEERING EXPRESS
160 SW 12th AVENUE, #206
DEERFIELD BEACH, FL 33442
PH: (954) 354-0660 FAX: (954) 354-0445
WWW.ENGEXP.COM
CERT OF AUTH #9885
A. FRANK L. BENNARDO, P.E., INC. INNOVATION

RECORD-USA
4324 HARGETT COURT
MONROE, NC 28110
(704) 289 - 9212

SERIES 5400 ALUMINUM AUTOMATIC SLIDING GLASS DOORS
LARGE MISSILE IMPACT RESISTANT
MIAMI-DADE NOTICE OF ACCEPTANCE

REMARKS	DRWN	CH'KD	DATE
INIT ISSUE	AML	KL	06/26/09
REV. PER BCCO COMMENT	KL	FLB	12/01/09
2010 FBC	KL	FLB	03/19/12

09-REU-0001
SCALE: - 02
PAGE DESCRIPTION:
23
8

03/27/2012 - 11:43am keith! F:\01 Project Files\Record-USA (REU)\2009\09-REU-0001 5400 LMI HR Sliders\09-REU-0001_02a 5400 LMI HR Sliders (NOA) - Revised Per Comments.dwg

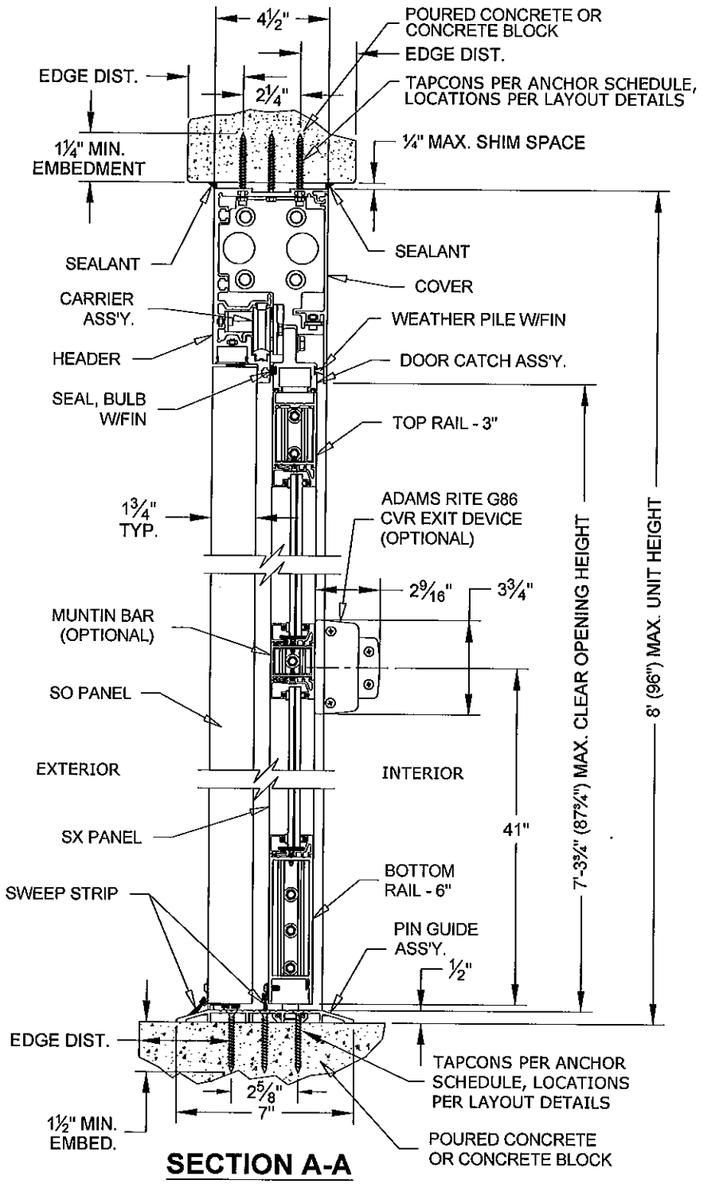

SECTION A-A

(SEE SECTION C-C FOR ADDITIONAL FASTENER DETAIL IN THRESHOLD)

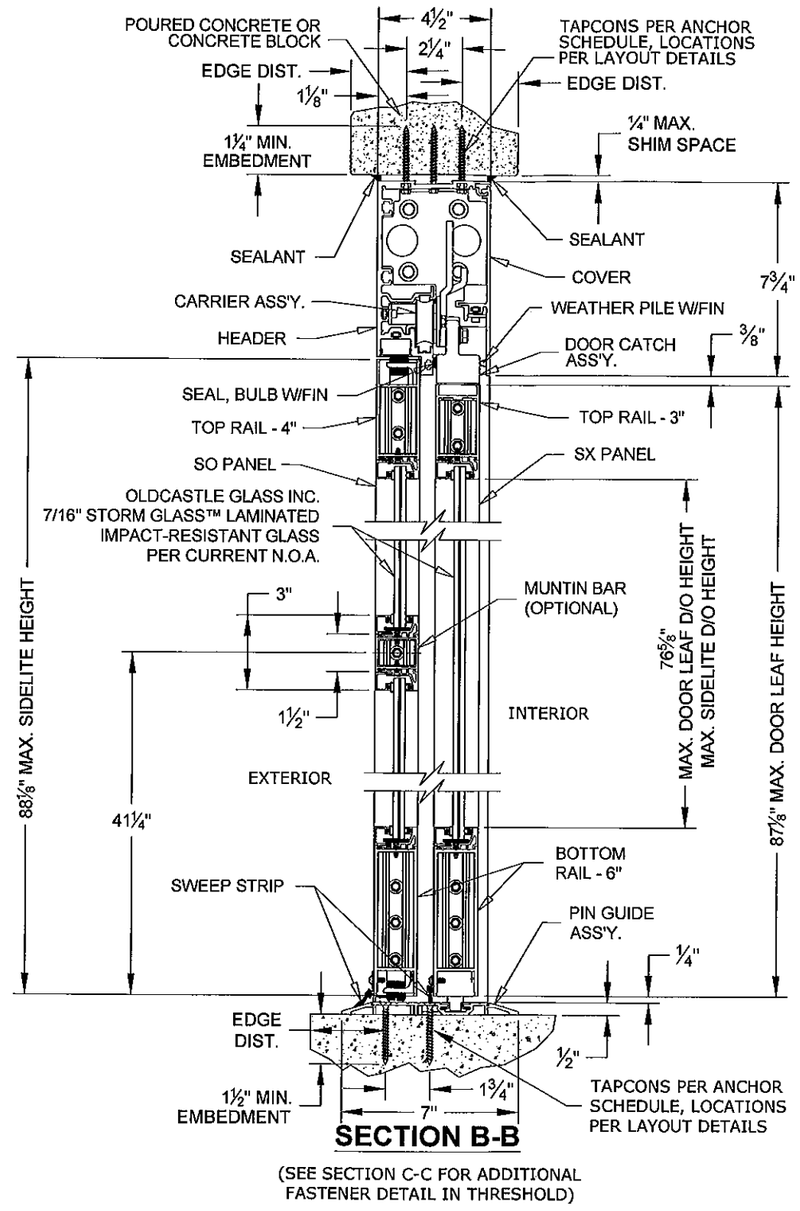

SECTION B-B

(SEE SECTION C-C FOR ADDITIONAL FASTENER DETAIL IN THRESHOLD)

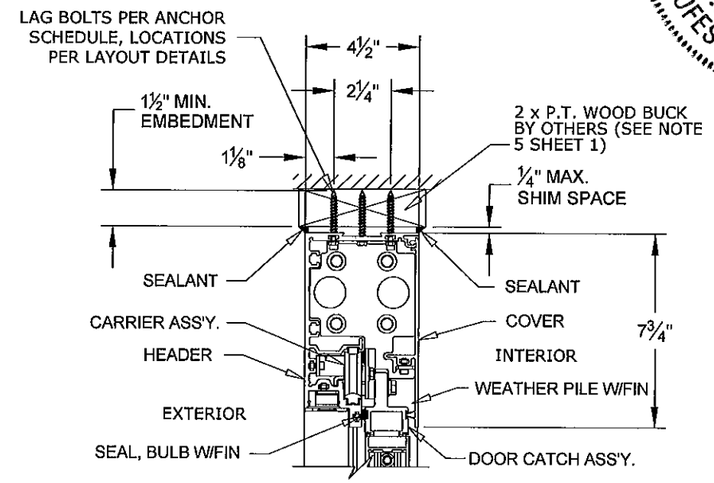

WOOD ALTERNATIVE

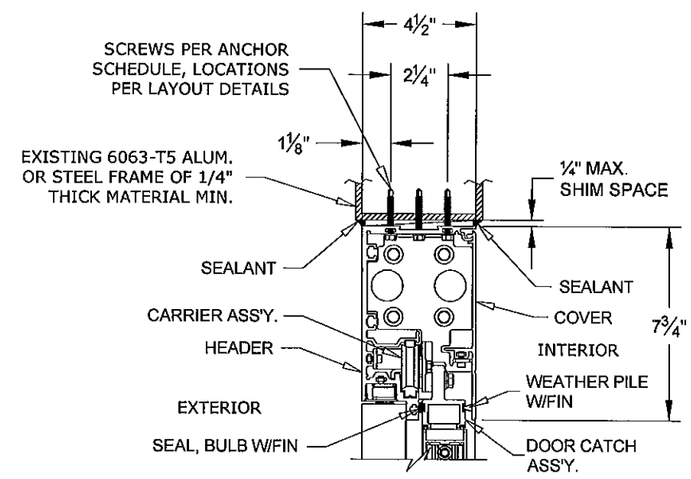

METAL STRUCTURE ALTERNATIVE

PRODUCT REVISED
in complying with the Florida Building Code
Acceptance No 12-0403.06
Expiration Date 3/17/15
By Ishwar L. Chande
Miami Dade/Product Control

FRANK L. BENNARDO, P.E.
#PE0056149
LICENSE
No 34762
STATE OF FLORIDA
PROFESSIONAL ENGINEER

ENGINEERING EXPRESS®
160 SW 12th AVENUE #100
DEERFIELD BEACH, FL 33442
Ph: (954) 354-0660 Fax: (954) 354-0669
WWW.ENGEXP.COM
CERT OF AUTH #9885
A. FRANK L. BENNARDO, P.E., INC. INNOVATION

RECORD-USA
4324 HARGETT COURT
MONROE, NC 28110
(704) 289 - 9212

SERIES 5400 ALUMINUM AUTOMATIC SLIDING GLASS DOORS
LARGE MISSILE IMPACT RESISTANT
MIAMI-DADE NOTICE OF ACCEPTANCE

REMARKS	DRWN	CHKD	DATE
INIT ISSUE	AML	KL	06/26/09
REV. PER BCCO COMMENT	KL	FLB	12/01/09
2010 FBC	KL	FLB	03/19/12

09-REU-0001

SCALE: - 02

PAGE DESCRIPTION:
-
-

9

23

03/27/2012 - 11:43am keithl F:\01 Project Files\Record-USA (REU)\2009\09-REU-0001 5400 LMI HR Sliders\09-REU-0001_02a 5400 LMI HR Sliders (NOA) - Revised Per Comments.dwg

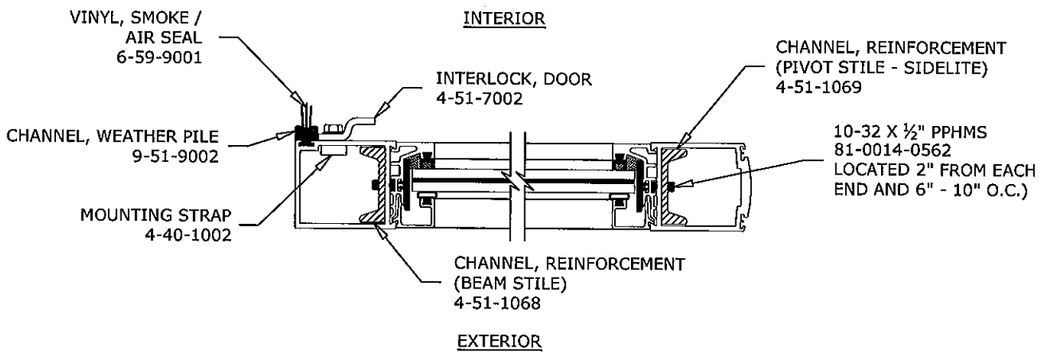

REINFORCEMENT DETAIL AT SO PANELS

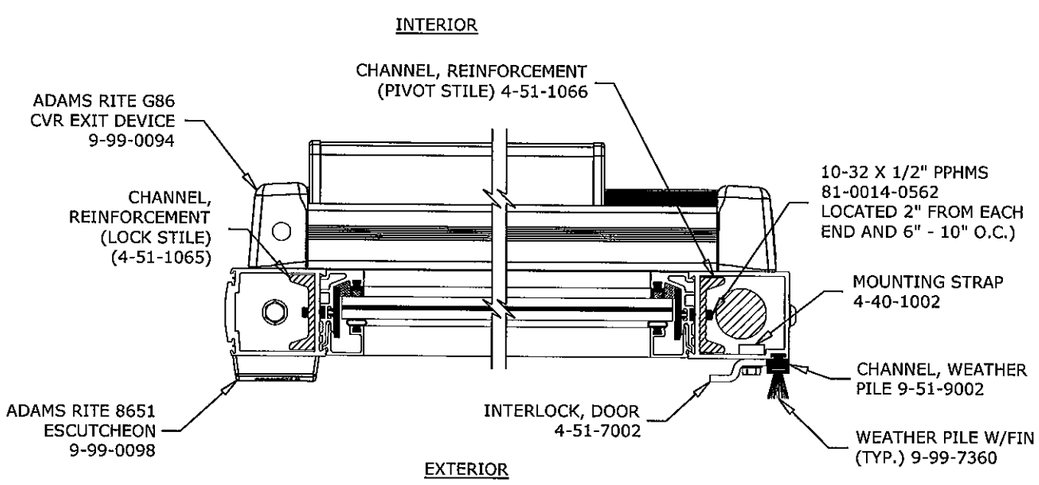

LOCK AND REINFORCEMENT DETAIL AT SX PANELS

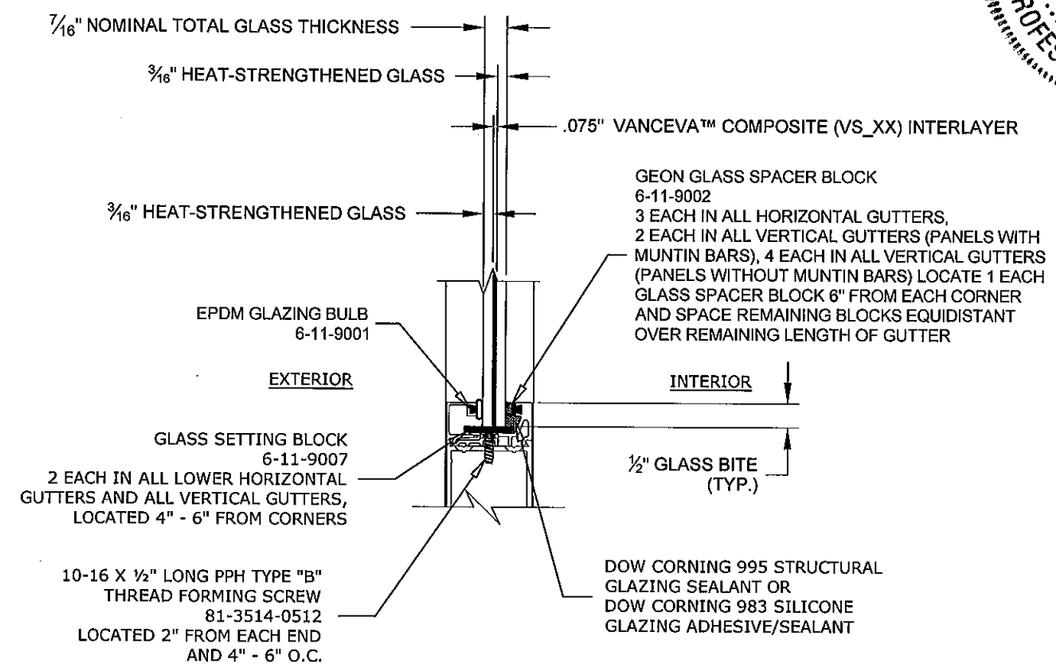

TYPICAL GLAZING DETAIL
(ALL LITES)

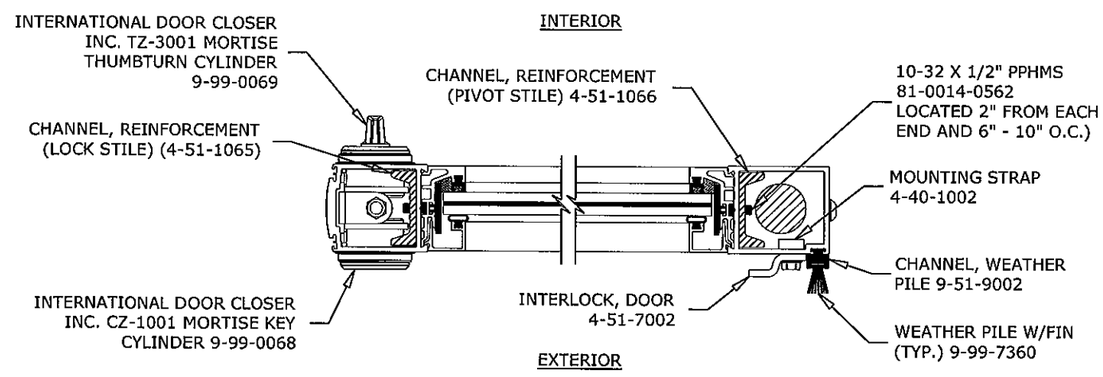

LOCK AND REINFORCEMENT DETAIL AT SX PANELS

PRODUCT REVISED
in complying with the Florida Building Code
Acceptance No. 12-0403.06
Expiration Date 8/17/15
By [signature]
Miami Dade Product Control

FRANK L. BENNARDO, P.E.
#PE0046549
LICENSE
03/27/2012
STATE OF FLORIDA
PROFESSIONAL ENGINEER
ENGINEERING EXPRESS, INC.
160 SW 12th AVENUE, #100
DEERFIELD BEACH, FL 33442
Ph: (954) 354-0660 Fax: (954) 354-0943
WWW.ENGEXP.COM
CERT OF AUTH #8685
A. FRANK L. BENNARDO, P.E., INC. INNOVATION

RECORD-USA
4324 HARGETT COURT
MONROE, NC 28110
(704) 289 - 9212

SERIES 5400 ALUMINUM AUTOMATIC SLIDING GLASS DOORS
LARGE MISSILE IMPACT RESISTANT
MIAMI-DADE NOTICE OF ACCEPTANCE

REMARKS	DRWN	CHKD	DATE
INIT ISSUE	AML	KL	06/26/09
REV. PER BOCO COMMENT	KL	FLB	12/01/09
2010 FBC	KL	FLB	03/19/12

09-REU-0001
SCALE: - 02
PAGE DESCRIPTION:
-
-

23

10

03/27/2012 - 11:43am keithl F:\01 Project Files\Record-USA (REU)\2009\09-REU-0001 5400 LMI HR Sliders\09-REU-0001_02a 5400 LMI HR Sliders (NOA) - Revised Per Comments.dwg

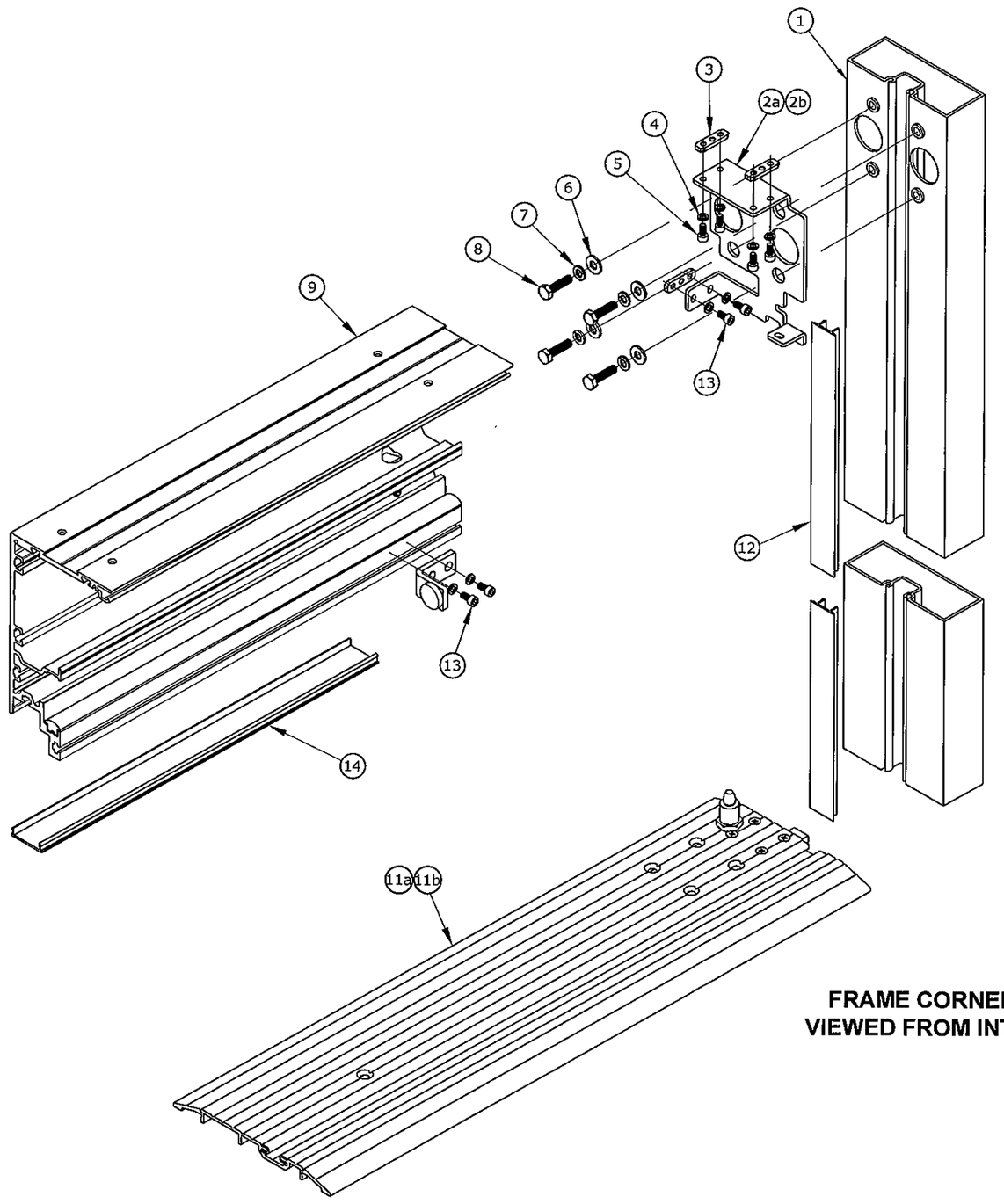

FRAME CORNER DETAILS
VIEWED FROM INTERIOR SIDE

HEADER / SIDE JAMB CORNER ATTACHMENT DETAIL			
ITEM NO.	PART NO.	DESCRIPTION	QUANTITY
1	5-60-1418	SIDE JAMB	2
2a	4-51-1055	BRACKET, HEADER MOUNTING - R.H.	1
2b	4-51-1056	BRACKET, HEADER MOUNTING - L.H.	1
3	4-51-1037	PLATE, NUT	8
4	9-99-7249	LOCK WASHER, SPLIT, #10	16
5	81-0016-2258	SCREW,10-32 X ⅜" SHCS	8
6	9-99-7346	WASHER, ¼" FLAT	8
7	9-99-7161	WASHER, ¼" LOCK SPLIT	8
8	81-0088-3670	SCREW, ¼-20 X 1" HHMS - GR. 8	8
9	5-51-4001	HEADER	1
10	4-51-0020	DOOR STOP ASS'Y.	2
11a	4-51-0150	PIN GUIDE THRESHOLD ASS'Y. - L.H.	1
11b	4-51-0151	PIN GUIDE THRESHOLD ASS'Y. - R.H.	1
12	5-60-1532	JAMB FILLER	2
13	81-0016-2562	SCREW, 10-32 X ½" SHCS	8
14	5-51-4003	FILLER, HEADER SOFFIT	3

PRODUCT REVISED
as complying with the Florida
Building Code
Acceptance No 12-0403.06
Expiration Date 3/17/15
By [signature]
Miami Dade Product Control

FRANK L. BENNARDO, P.E.
PE0046349
LICENSE
No. 46549
03/27/2012
STATE OF FLORIDA
PROFESSIONAL ENGINEER

ENGINEERING EXPRESS
160 SW 12th AVENUE #106
DEERFIELD BEACH, FL 33442
PH: (954) 354-0660 FAX: (954) 354-0443
WWW.ENGEXP.COM
CERT OF AUTH #9885
A FRANK L. BENNARDO, P.E., INC. INNOVATION

RECORD-USA
4324 HARGETT COURT
MONROE, NC 28110
(704) 289 - 9212

SERIES 5400 ALUMINUM AUTOMATIC SLIDING GLASS DOORS
LARGE MISSILE IMPACT RESISTANT
MIAMI-DADE NOTICE OF ACCEPTANCE

REMARKS	DRWN	CHKD	DATE
INIT ISSUE	AML	KL	06/26/09
REV. PER BCCO COMMENT	KL	FLB	12/01/09
2010 FBC	KL	FLB	03/19/12
-	-	-	-
-	-	-	-

09-REU-0001
SCALE: - 02
PAGE DESCRIPTION:
-
-

23

11

03/27/2012 - 11:44am keithl F:\01 Project Files\Record-USA (REU)\2009\09-REU-0001 5400 LMI HR Sliders\09-REU-0001_02a 5400 LMI HR Sliders (NOA) - Revised Per Comments.dwg

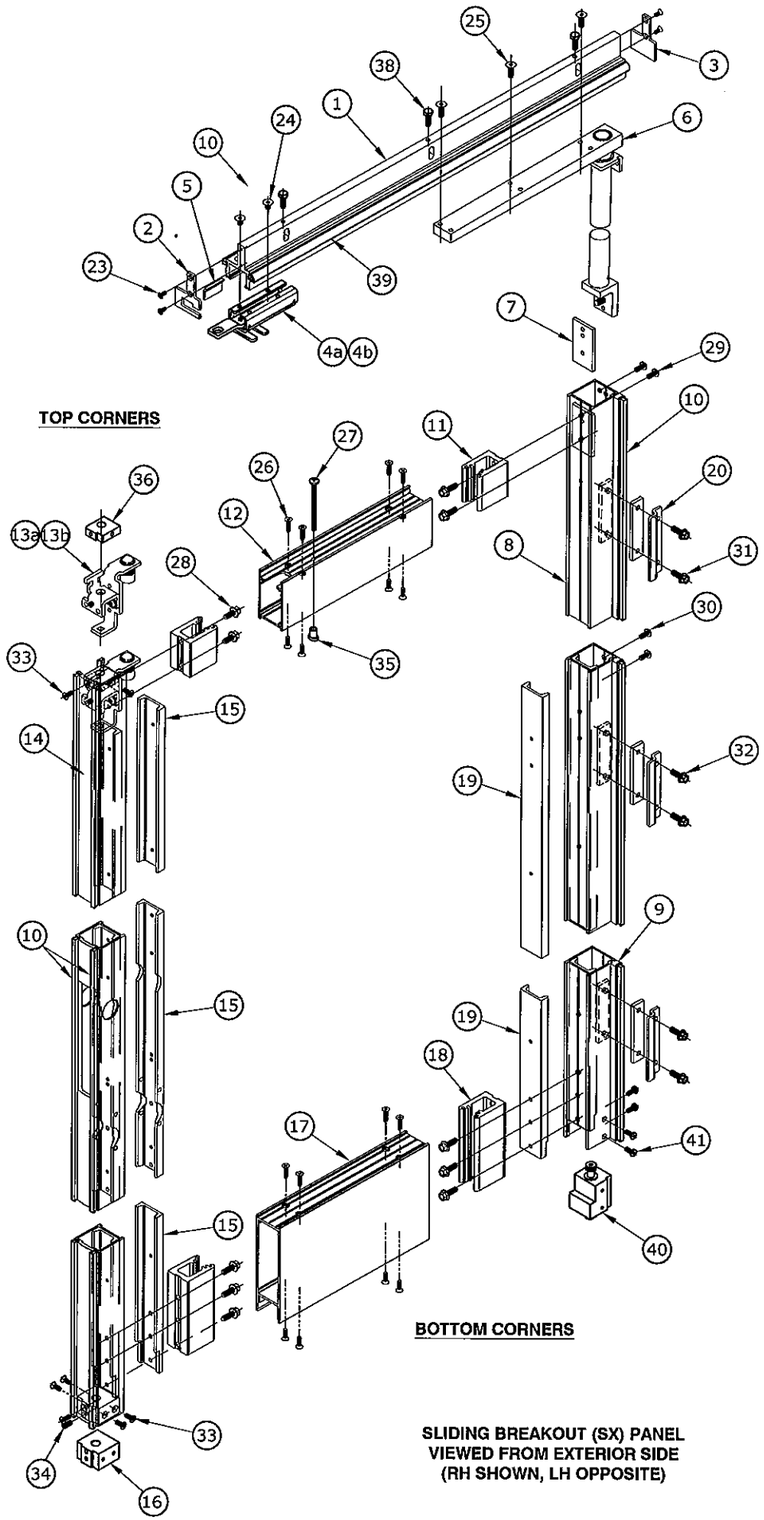

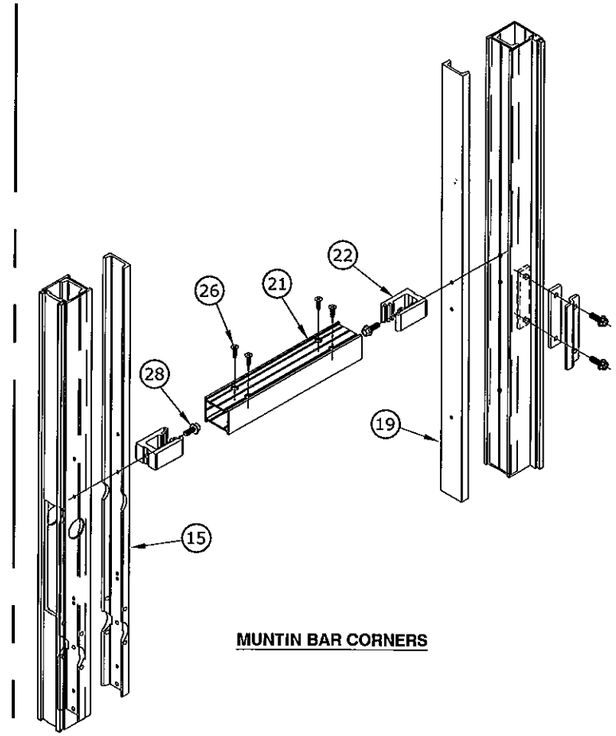

PRODUCT REVISED
in complying with the Florida
Building Code
Acceptance No 12-0403.06
Expiration Date 3/7/15
By Ishar I. Chauhan
Miami-Dade Product Control

SLIDING BREAKOUT (SX) PANEL						
ITEM NO.	PART NO.	DESCRIPTION	QUANTITY			
			W/O MUNTIN BAR		W/MUNTIN BAR	
			L.H.	R.H.	L.H.	R.H.
1	5-51-4006	DOOR CATCH	1	1	1	1
2	4-59-1020	END CAP, DOOR CATCH (POSITIVE LATCH)	1	1	1	1
3	4-51-1049	END CAP, DOOR CATCH	1	1	1	1
4a	4-51-0027	DOOR CATCH ASS'Y. - L.H.	1	-	1	-
4b	4-51-0014	DOOR CATCH ASS'Y. - R.H.	-	1	-	1
5	4-51-9004	COVER, DOOR CATCH	1	1	1	1
6	4-51-0011	TORQUE BAR ASS'Y.	1	1	1	1
7	4-11-1082	PLATE, BACKER	1	1	1	1
8	5-11-4022	STILE, FIXED (NARROW)	1	1	1	1
9	6-51-9002	CHANNEL, WEATHER PILE	1	1	1	1
10	9-99-7360	WEATHER PILE W/FIN	A/R	A/R	A/R	A/R
11	4-11-4097	BLOCK, SHEAR	2	2	2	2
12	5-51-4009	RAIL - 3"	1	1	1	1
13a	4-51-0015	INTERLOCK ASS'Y. - L.H.	1	-	1	-
13b	4-51-0016	INTERLOCK ASS'Y. - R.H.	-	1	-	1
14	5-11-4021	STILE, TANDEM (NARROW)	1	1	1	1
15	4-51-1065	CHANNEL, REINFORCEMENT (LOCK STILE)	1	1	1	1
16	4-51-9007	BLOCK, FLUSHBOLT SUPPORT	1	1	1	1
17	5-11-4036	RAIL - 6"	1	1	1	1
18	4-51-4151	BLOCK, SHEAR	2	2	2	2
19	4-51-1066	CHANNEL, REINFORCEMENT (PIVOT STILE)	1	1	1	1
20	4-51-7002	INTERLOCK, DOOR	5	5	5	5
21	5-11-4031	MUNTIN BAR	-	-	1	1
22	4-11-4096	BLOCK, SHEAR	-	-	2	2
23	81-3511-0412-DB	SCREW, 8-18 X ½" PFHSMS, TYPE B	4	4	4	4
24	81-0011-2658	SCREW, ¼-20 X ⅜" SFCHCS	2	2	2	2
25	81-0011-2670	SCREW, ¼-20 X 1" SFCHCS	3	3	3	3
26	81-4411-0516	SCREW, 10-24 X ¾" PFHSMS, TYPE 23	16	16	20	20
27	81-0014-0688	SCREW, ¼-20 X 3" PPHMS	1	1	1	1
28	81-0017-3666	SCREW, ¼-20 X ¾" HWHMS, GR. 8	10	10	12	12
29	81-0016-2658	SCREW, ¼-20 X ⅜" BSHCS - S.S.	2	2	2	2
30	81-0014-2670	SCREW, ¼-20 X 1" BSHCS - S.S.	2	2	2	2
31	81-0017-3662	SCREW, ¼-20 X ½" HWHMS, GR. 8	2	2	2	2
32	81-0017-3664	SCREW, ¼-20 X ⅝" HWHMS, GR. 8	8	8	8	8
33	81-0011-0562	SCREW, 10-32 X ½" PFHMS	7	7	7	7
34	9-99-0113	PLUNGER, SPRING LOADED	1	1	1	1
35	9-99-2596	BLOCK, GLASS JACKING	1	1	1	1
36	4-51-4265	BLOCK, HEX BOLT GUIDE	1	1	1	1
37	4-40-1002	MOUNTING STRAP	5	5	5	5
38	81-0718-3666	SCREW, ¼-20 X ¾" HHMS, GR. 5 W/NYLOC STRIP	3	3	3	3
39	6-11-9009	SEAL, BULB W/FIN	A/R	A/R	A/R	A/R
40	4-51-0093	BOTTOM GUIDE ASS'Y.	1	1	1	1
41	81-0074-0562	SCREW, 10-32 X ½" PPHMS - STAINLESS STEEL	4	4	4	4

FRANK L. BENNARDO
LICENSE
No. 46549
03/27/2012
STATE OF FLORIDA
PROFESSIONAL ENGINEER

FRANK L. BENNARDO, P.E.
LICENSE #46549
ENGINEERING EXPRESS, INC.
160 SW 12th AVENUE, #106
DEERFIELD BEACH, FL 33442
PH: (954) 354-0660 FAX: (954) 354-0445
WWW.ENGEXP.COM
CERT OF AUTH #9695
A. FRANK L. BENNARDO, P.E., INC. INNOVATION

RECORD-USA
4324 HARGETT COURT
MONROE, NC 28110
(704) 289 - 9212

SERIES 5400 ALUMINUM AUTOMATIC SLIDING GLASS DOORS
LARGE MISSILE IMPACT RESISTANT
MIAMI-DADE NOTICE OF ACCEPTANCE

REMARKS	DRWN	CHKD	DATE
INIT ISSUE	AML	KL	06/26/09
REV. PER BCCO COMMENT	KL	FLB	12/01/09
2010 FBC	KL	FLB	03/19/12
-	-	-	-
-	-	-	-

09-REU-0001
SCALE: - 02
PAGE DESCRIPTION:
-
-

23

12

03/27/2012 - 11:44am keithl F:\01 Project Files\Record-USA (REU)\2009\09-REU-0001 5400 LMI HR Sliders (NOA) - Revised Per Comments.dwg

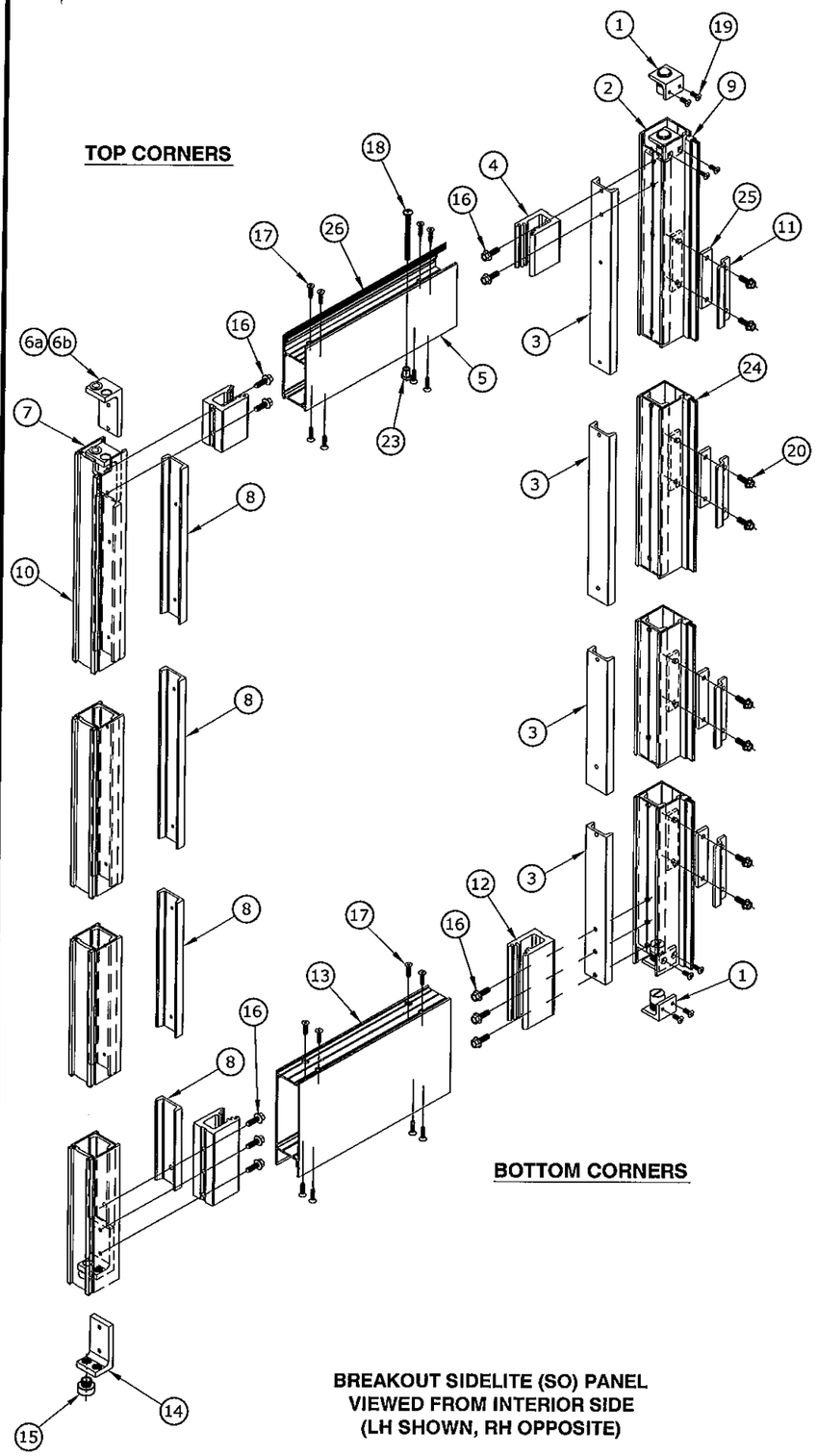

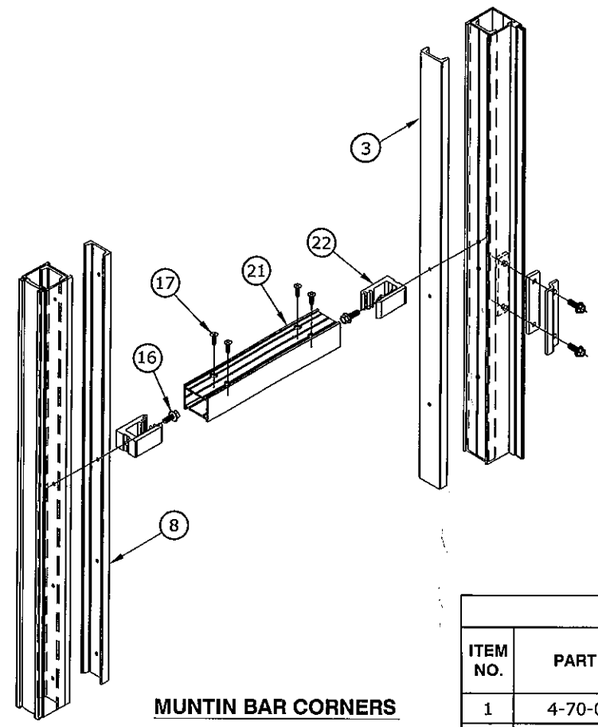

PRODUCT REVISED
to complying with the Florida
Building Code
Acceptance No. 12-0403.06
Expiration Date 3/17/15
By Lyhsey L. Quinn
Product Code/Product Control

BREAKAWAY SIDELITE (SO) PANEL						
ITEM NO.	PART NO.	DESCRIPTION	QUANTITY			
			W/O MUNTIN BAR		W/MUNTIN BAR	
			L.H.	R.H.	L.H.	R.H.
1	4-70-0672	ROLLER CATCH ASS'Y.	2	2	2	2
2	5-11-4022	STILE, FIXED (NARROW)	1	1	1	1
3	4-51-1068	CHANNEL, REINFORCEMENT (BEAM STILE)	1	1	1	1
4	4-11-4098	BLOCK, SHEAR	2	2	2	2
5	5-11-4034	RAIL - 4"	1	1	1	1
6a	4-11-0432	ANGLE ASS'Y., SIDELITE PIVOT (TOP) - L.H.	1	-	1	-
6b	4-11-0433	ANGLE ASS'Y., SIDELITE PIVOT (TOP) - R.H.	-	1	-	1
7	5-11-4021	STILE, TANDEM (NARROW)	1	1	1	1
8	4-51-1069	CHANNEL, REINFORCEMENT (PIVOT STILE)	1	1	1	1
9	6-51-9002	CHANNEL, WEATHER PILE	1	1	1	1
10	9-99-7360	WEATHER PILE W/FIN	A/R	A/R	A/R	A/R
11	4-51-7002	INTERLOCK, DOOR	5	5	5	5
12	4-51-4151	BLOCK, SHEAR	1	1	1	1
13	5-11-4036	RAIL - 6"	1	1	1	1
14	4-51-1067	ANGLE, SIDELITE PIVOT (BOTTOM)	1	1	1	1
15	4-51-7003	BUSHING, SIDELITE PIVOT (BOTTOM)	1	1	1	1
16	81-0017-3666	SCREW, ¼-20 X ¾" HWHMS, GR. 8	10	10	12	12
17	81-4411-0516	SCREW, 10-24 X ¾" PFHSMS, TYPE 23	16	16	20	20
18	81-0014-0690	SCREW, ¼-20 X 3½" PPHMS	1	1	1	1
19	81-0012-0562	SCREW, 10-32 X 5/16" PFUHMS	4	4	4	4
20	81-0017-3664	SCREW, ¼-20 X 5/8" HWHMS, GR. 8	10	10	10	10
21	5-11-4031	MUNTIN BAR	-	-	1	1
22	4-11-4096	BLOCK, SHEAR	-	-	2	2
23	9-99-2596	BLOCK, GLASS JACKING	1	1	1	1
24	6-59-9001	VINYL, SMOKE / AIR SEAL	A/R	A/R	A/R	A/R
25	4-40-1002	MOUNTING STRAP	5	5	5	5
26	9-99-7361	SEAL, SIDELITE (TOP)	1	1	1	1

FRANK L. BENNARDO, P.E.
LICENSE No. 46549
STATE OF FLORIDA
PROFESSIONAL ENGINEER
03/27/2012
ENGINEERING EXPRESS, INC.
160 SW 12th AVENUE
DEERFIELD BEACH, FL 33442
Ph: (954) 354-0660 Fax: (954) 354-0443
WWW.ENGEXP.COM
CERT OF AUTH #9885
A. FRANK L. BENNARDO, P.E., INC. INNOVATION.

RECORD-USA
4324 HARGETT COURT
MONROE, NC 28110
(704) 289 - 9212

SERIES 5400 ALUMINUM AUTOMATIC SLIDING GLASS DOORS
LARGE MISSILE IMPACT RESISTANT
MIAMI-DADE NOTICE OF ACCEPTANCE

REMARKS	DRWN	CHKD	DATE
INIT ISSUE	AML	KL	06/26/09
REV. PER BCCO COMMENT	KL	FLB	12/01/09
2010 FBC	KL	FLB	03/19/12

09-REU-0001
SCALE: - 02
PAGE DESCRIPTION:
-
-

13 / 23

03/27/2012 - 11:44am keithl F:\01 Project Files\Record-USA (REU)\2009\09-REU-0001 5400 LMI HR Sliders\09-REU-0001_02a 5400 LMI HR Sliders (NOA) - Revised Per Comments.dwg

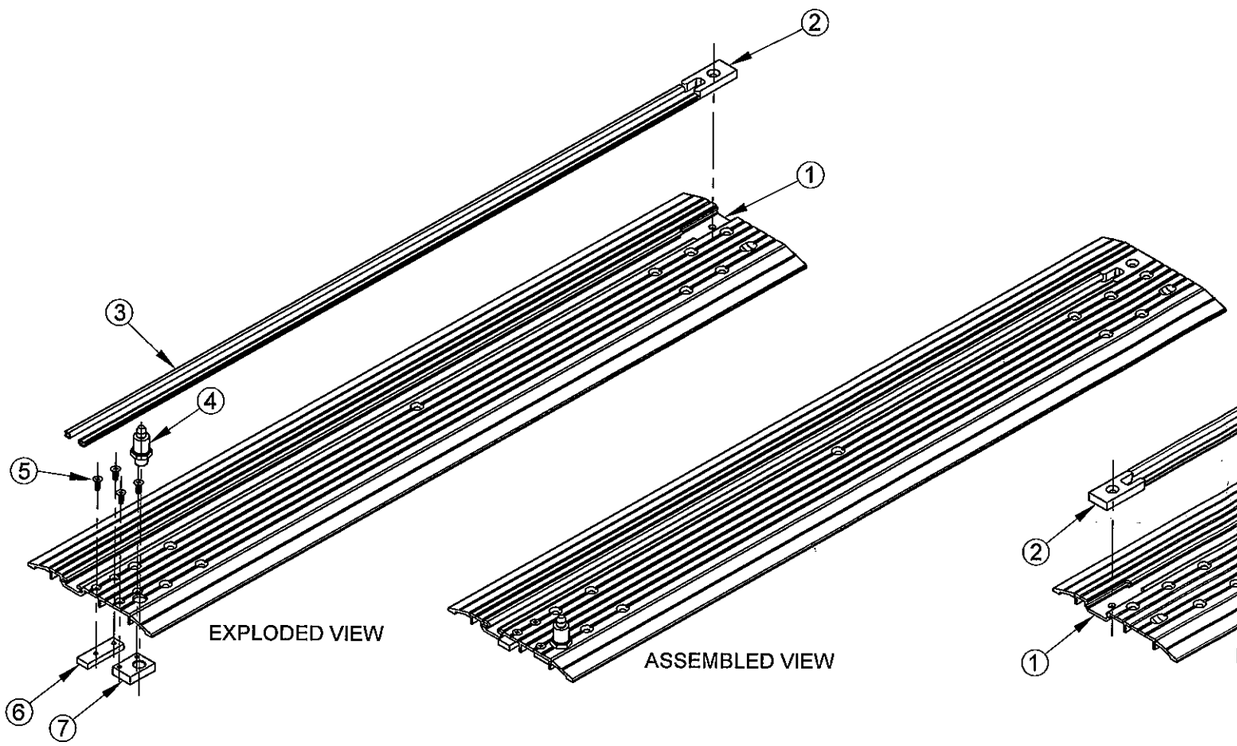

PIN GUIDE THRESHOLD ASS'Y. - L.H.

PART NO.: 4-51-0160
SCALE: 1" = 6"

BILL OF MATERIALS			
ITEM NO.	PART NO.	DESCRIPTION	QTY.
1	4-51-4260	PIN GUIDE THRESHOLD MACHINING - L.H.	1
2	4-51-7005	PLATE, PIN GUIDE SUPPORT	1
3	9-70-0077	BUMPER, PIN GUIDE	2
4	4-11-1031	PIN, SIDELITE PIVOT (BOTTOM)	1
5	81-0011-0562	SCREW, 10-32 X ½" FFHMS	4
6	4-51-4009	BAR, ALIGNMENT (PIN GUIDE THRESHOLD)	1
7	4-51-4265	BLOCK, SIDELITE PIVOT (BOTTOM)	1

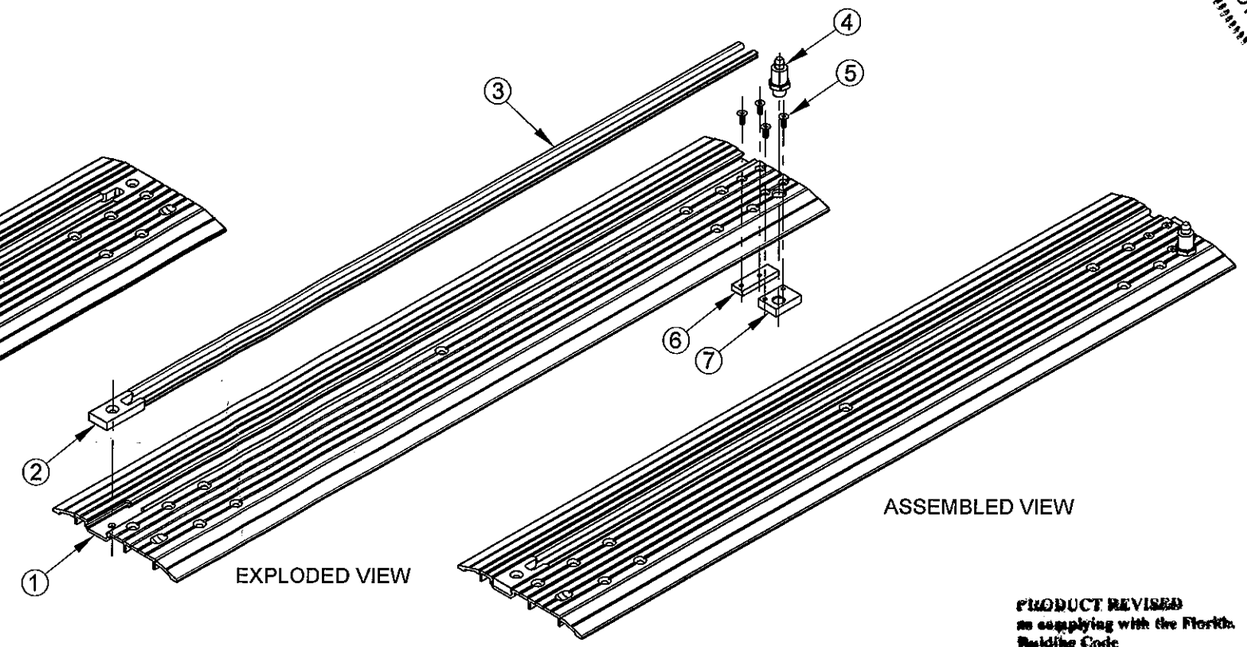

PIN GUIDE THRESHOLD ASS'Y. - R.H.

PART NO.: 4-51-0161
SCALE: 1" = 6"

BILL OF MATERIALS			
ITEM NO.	PART NO.	DESCRIPTION	QTY.
1	4-51-4261	PIN GUIDE THRESHOLD MACHINING - R.H.	1
2	4-51-7005	PLATE, PIN GUIDE SUPPORT	1
3	9-70-0077	BUMPER, PIN GUIDE	2
4	4-11-1031	PIN, SIDELITE PIVOT (BOTTOM)	1
5	81-0011-0562	SCREW, 10-32 X ½" FFHMS	4
6	4-51-4009	BAR, ALIGNMENT (PIN GUIDE THRESHOLD)	1
7	4-51-4265	BLOCK, SIDELITE PIVOT (BOTTOM)	1

PRODUCT REVISED
as complying with the Florida
Building Code
Acceptance No 12-0403.06
Expiration Date 3/17/15
By Shang L. Chang
Miami Dade Product Control

FRANK L. BENNARDO, P.E.
LICENSE #46549
STATE OF FLORIDA
PROFESSIONAL ENGINEER
03/27/2012

ENGINEERING EXPRESS
160 SW 12th AVENUE
DEERFIELD BEACH, FL 33442
PH: (954) 354-0660 FAX: (954) 354-0443
WWW.ENGEXP.COM
CERT OF AUTH #8885
A. FRANK L. BENNARDO, P.E., INC. INNOVATION

RECORD-USA
4324 HARGETT COURT
MONROE, NC 28110
(704) 289 - 9212

SERIES 5400 ALUMINUM AUTOMATIC SLIDING GLASS DOORS
LARGE MISSILE IMPACT RESISTANT
MIAMI-DADE NOTICE OF ACCEPTANCE

REMARKS	DRWN	CHKD	DATE
INIT ISSUE	AML	KL	06/26/09
REV. PER BOCO COMMENT	KL	FLB	12/01/09
2010 TBC	KL	FLB	03/19/12

09-REU-0001
SCALE: - 02
PAGE DESCRIPTION:

23
14

03/27/2012 - 11:44am keithl F:\01 Project Files\Record-USA (REU)\2009\09-REU-0001 5400 LMI HR Sliders\09-REU-0001 5400 LMI HR Sliders (NOA) - Revised Per Comments.dwg

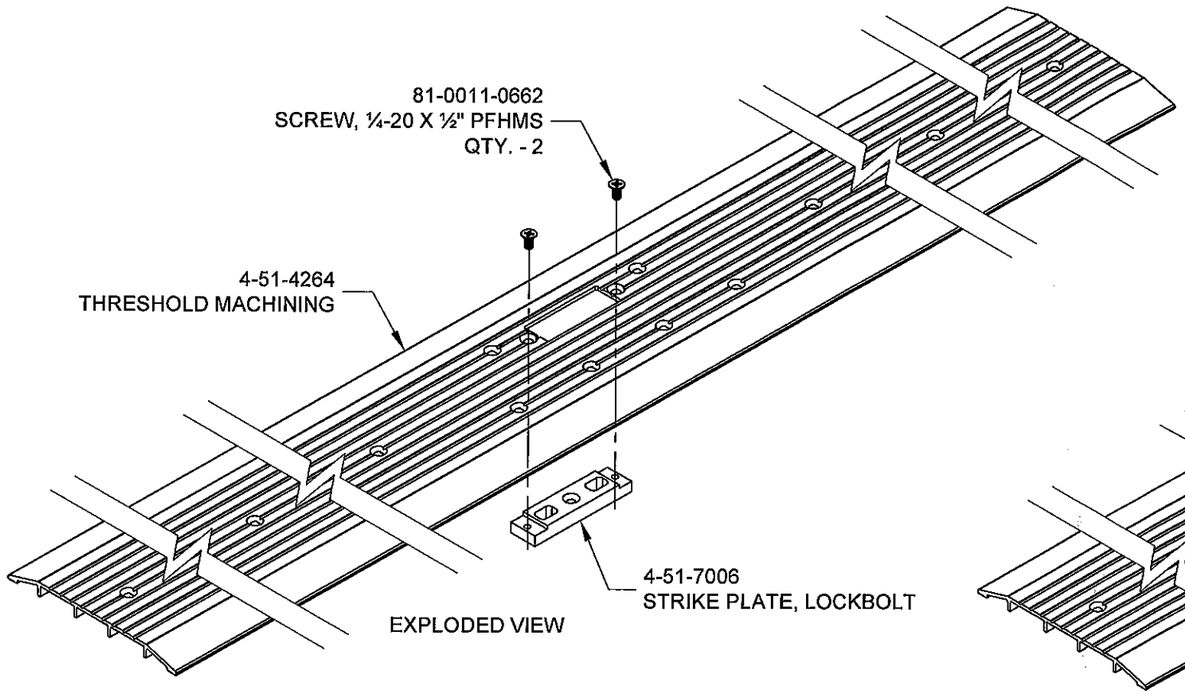

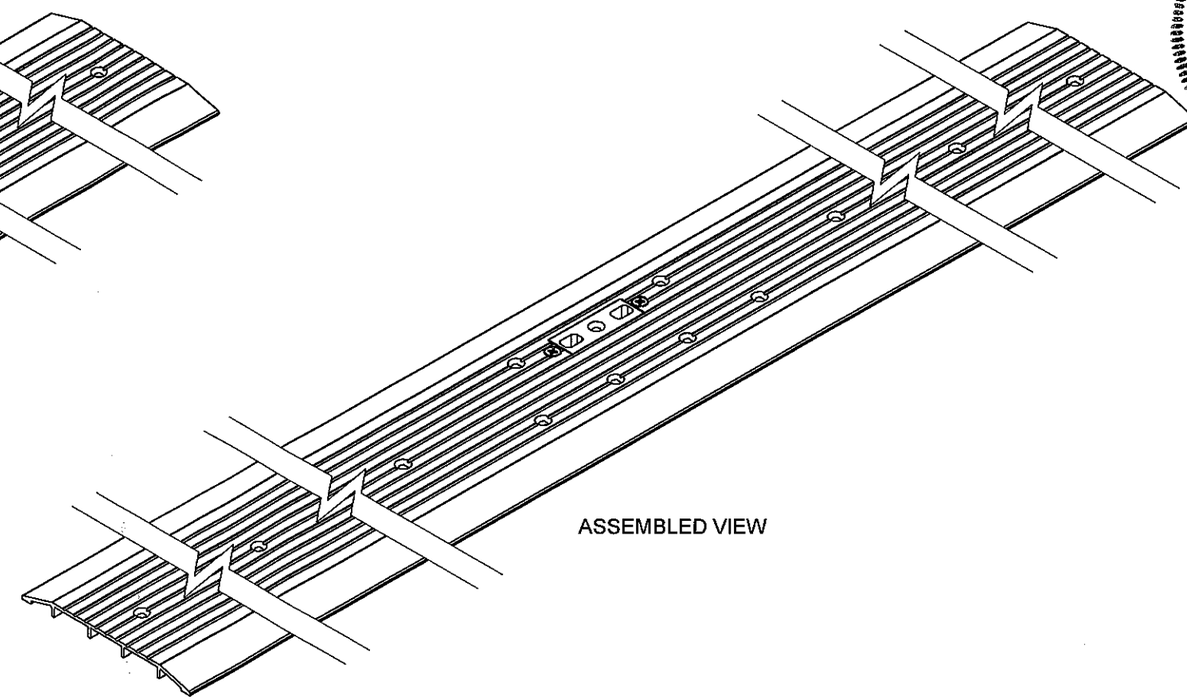

THRESHOLD ASS'Y. - BIPART

PART NO.: 4-51-0164
SCALE: ¼" = 1"

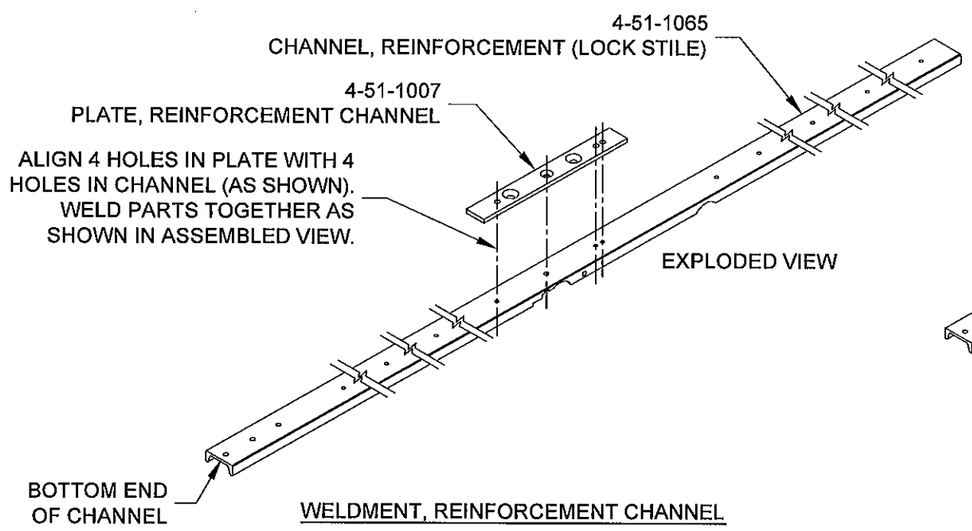

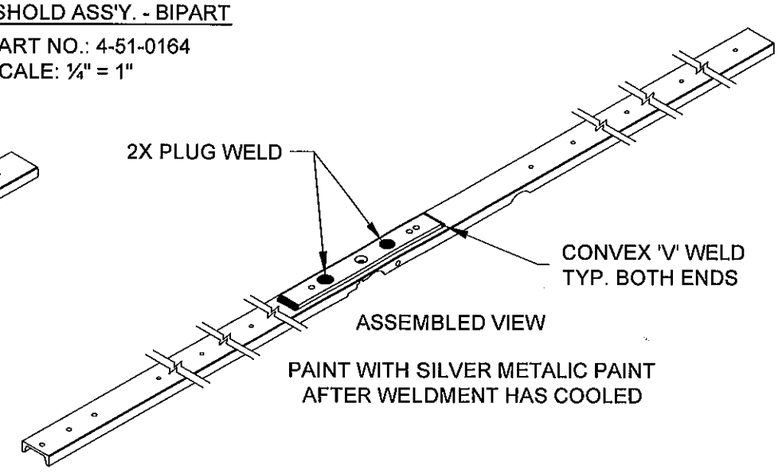

PAINT WITH SILVER METALIC PAINT
AFTER WELDMENT HAS COOLED

WELDMENT, REINFORCEMENT CHANNEL

PART NO.: 4-51-0029
SCALE: 1" = 6"

PRODUCT REVISED
as complying with the Florida
Building Code
Acceptance No 12-0403.06
Expiration Date 3/17/15
By Ishag J. Chaudhary
Miami Dade Product Control

FRANK L. BENNARDO, P.E.
P2004-6669
LICENSE
No. 46549
03/27/2012
STATE OF FLORIDA
PROFESSIONAL ENGINEER

ENGINEERING EXPRESS
160 SW 12th AVENUE, #1386
DEERFIELD BEACH, FL 33442
PH: (954) 354-0660 FAX: (954) 354-0663
WWW.ENGEXP.COM
CERT OF AUTH #9885
A FRANK L. BENNARDO, P.E., INC. INNOVATION

RECORD-USA
4324 HARGETT COURT
MONROE, NC 28110
(704) 289 - 9212

SERIES 5400 ALUMINUM AUTOMATIC SLIDING GLASS DOORS
LARGE MISSILE IMPACT RESISTANT
MIAMI-DADE NOTICE OF ACCEPTANCE

REMARKS	DRWN	CHKD	DATE
INIT ISSUE	AML	KL	06/26/09
REV. PER BCCO COMMENT	KL	FLB	12/01/09
2010 FBC	KL	FLB	03/19/12
-	-	-	-
-	-	-	-

09-REU-0001
SCALE: - 02
PAGE DESCRIPTION:
-
-

23

15

F:\01 Project Files\Record-USA (REU)\2009\09-REU-0001 5400 LMI HR Sliders\09-REU-0001_02a 5400 LMI HR Sliders (NOA) - Revised Per Comments.dwg
03/27/2012 - 11:44am keithl

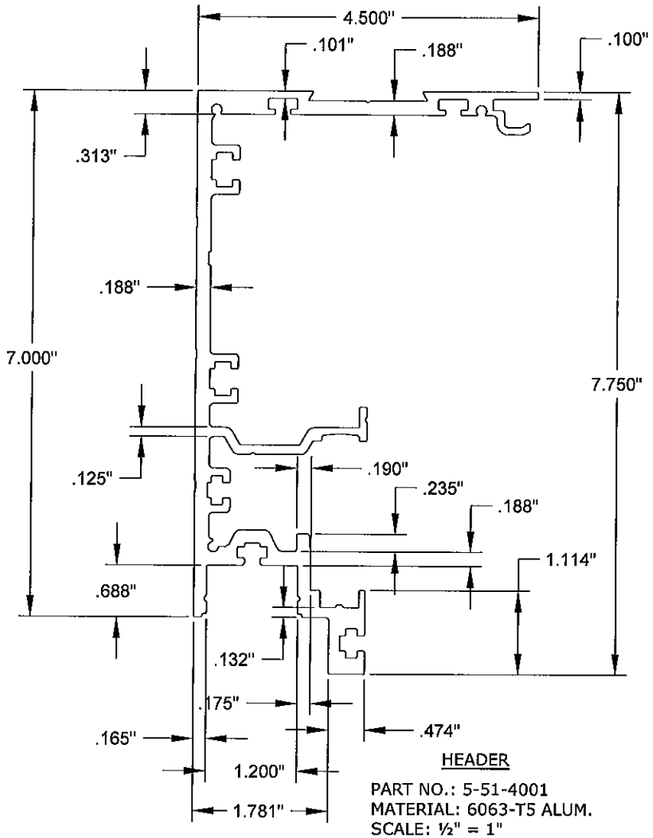

HEADER

PART NO.: 5-51-4001
MATERIAL: 6063-T5 ALUM.
SCALE: ½" = 1"

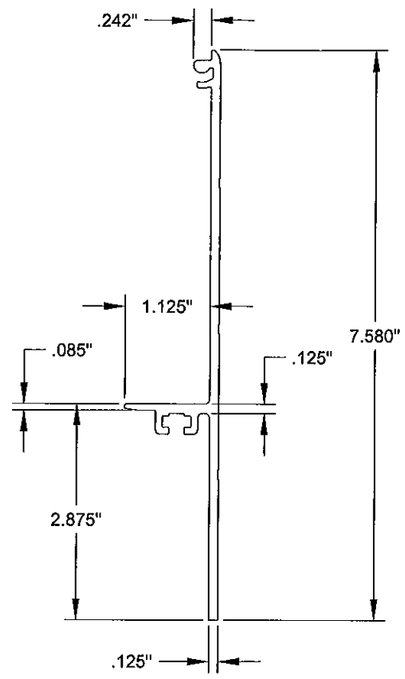

COVER, HEADER

PART NO.: 5-51-4002
MATERIAL: 6063-T5 ALUM.
SCALE: ½" = 1"

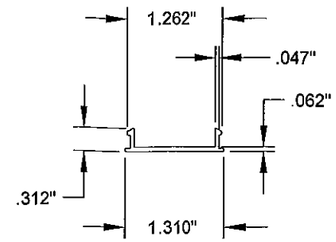

FILLER, HEADER SOFFIT

PART NO.: 5-51-4003
MATERIAL: 6063-T5 ALUM.
SCALE: ½" = 1"

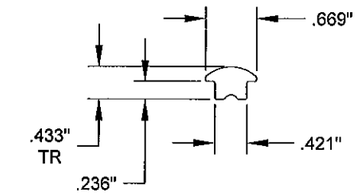

ROLLER TRACK

PART NO.: 5-51-4004
MATERIAL: 6063-T5 ALUM.
SCALE: ½" = 1"

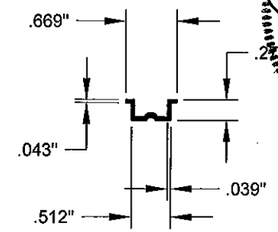

DAMPER, ROLLER TRACK

PART NO.: 9-51-0001
MATERIAL: EPDM
SCALE: ½" = 1"

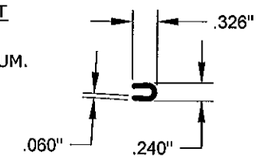

BUMPER, PIN GUIDE

PART NO.: 9-70-0077
MATERIAL: NYLATRON® GS
SCALE: ½" = 1"

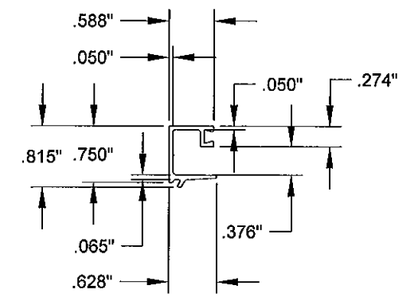

SASH, SQUARE

PART NO.: 5-11-4040
MATERIAL: 6063-T5 ALUM.
SCALE: ½" = 1"

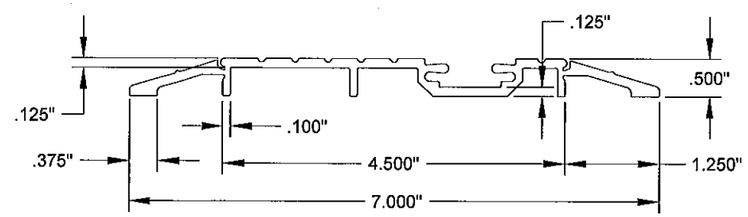

PIN GUIDE, RAMPED

PART NO.: 5-11-4008
MATERIAL: 6063-T5 ALUM.
SCALE: ½" = 1"

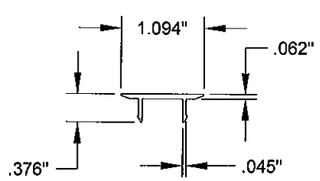

FILLER, SIDE JAMB

PART NO.: 5-60-1532
MATERIAL: 6063-T5 ALUM.
SCALE: ½" = 1"

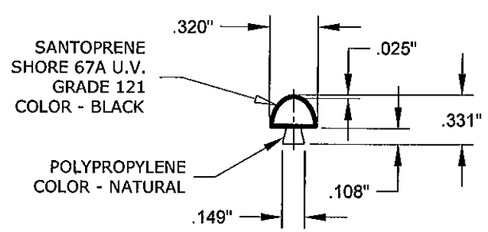

GLAZING BULB COEXTRUSION

PART NO.: 6-11-9011
MATERIAL: SEE ABOVE
SCALE: FULL

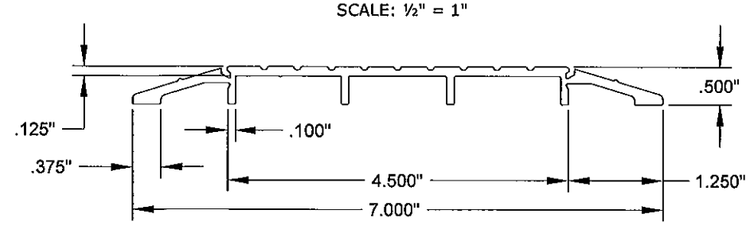

THRESHOLD, SADDLE

PART NO.: 5-51-4021
MATERIAL: 6063-T5 ALUM.
SCALE: ½" = 1"

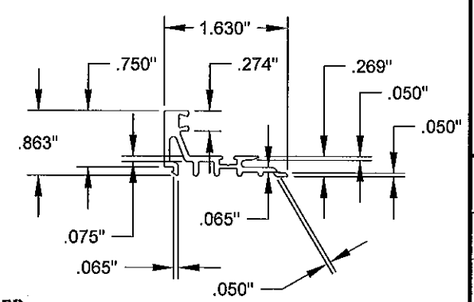

GUTTER, HURRICANE

PART NO.: 5-11-4044
MATERIAL: 6063-T5 ALUM.
SCALE: ½" = 1"

PRODUCT REVISED
in complying with the Florida Building Code
Acceptance No 12-0403.06
Expiration Date 3/17/15
By Ibrag L. Chanda
Miami Dade Product Control

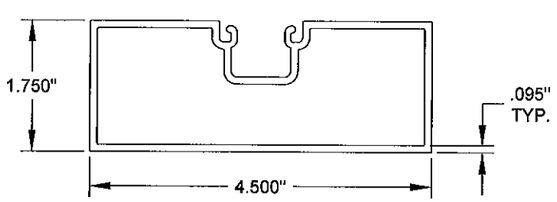

SIDE JAMB

PART NO.: 5-60-1418
MATERIAL: 6063-T5 ALUM.
SCALE: ½" = 1"

NOTE: ALL ALUMINUM EXTRUSIONS SHALL HAVE A MINIMUM Fu=31 ksi & Fy=26200 psi.

FRANK L. BENNARDO, P.E.
#PE46549
STATE OF FLORIDA
PROFESSIONAL ENGINEER
03/27/2012

ENGINEERING EXPRESS®
160 SW 12th AVENUE, #100
DEERFIELD BEACH, FL 33442
Ph: (954) 354-0660 Fax: (954) 354-0443
WWW.ENGEXP.COM
CERT OF AUTH #9885
A FRANK L. BENNARDO, P.E., INC. INNOVATION

RECORD-USA
4324 HARGETT COURT
MONROE, NC 28110
(704) 289 - 9212

SERIES 5400 ALUMINUM AUTOMATIC SLIDING GLASS DOORS
LARGE MISSILE IMPACT RESISTANT
MIAMI-DADE NOTICE OF ACCEPTANCE

REMARKS	DRWN	CHKD	DATE
INIT ISSUE	AML	KL	06/26/09
REV. PER BCCO COMMENT	KL	FLB	12/01/09
2/10 FBC	KL	FLB	03/19/12

09-REU-0001
SCALE: - 02
PAGE DESCRIPTION:
-
-

23

16

03/27/2012 - 11:44am keith! F:\01 Project Files\Record-USA (REU)\2009\09-REU-0001 5400 LMI HR Sliders\09-REU-0001_02a 5400 LMI HR Sliders (NOA) - Revised Per Comments.dwg

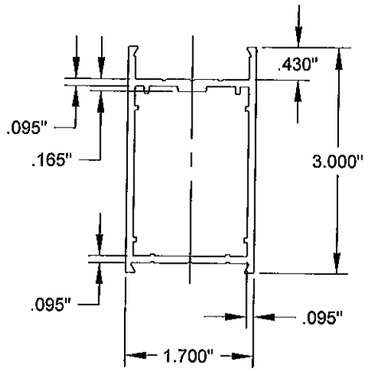

RAIL, TOP (SX PANEL)

PART NO.: 5-51-4009
MATERIAL: 6063-T5 ALUM.
SCALE: ½" = 1"

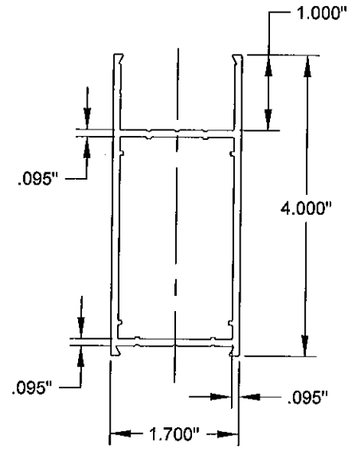

RAIL, TOP (SO PANEL)

PART NO.: 5-11-4034
MATERIAL: 6063-T5 ALUM.
SCALE: ½" = 1"

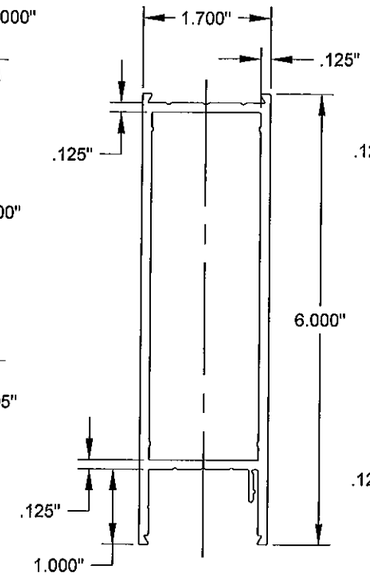

RAIL, BOTTOM - 6"

PART NO.: 5-11-4036
MATERIAL: 6063-T5 ALUM.
SCALE: ½" = 1"

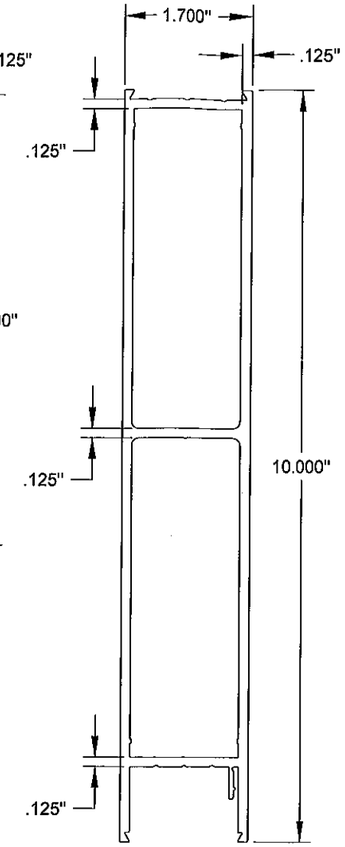

RAIL, BOTTOM - 10" (OPTIONAL)

PART NO.: 5-51-4011
MATERIAL: 6063-T5 ALUM.
SCALE: ½" = 1"

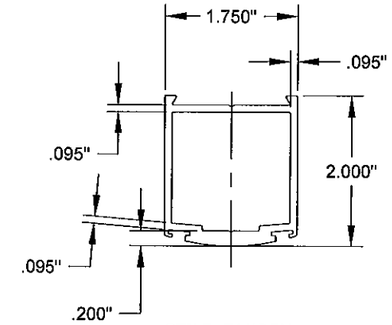

STILE, TANDEM

PART NO.: 5-11-4021
MATERIAL: 6063-T5 ALUM.
SCALE: ½" = 1"

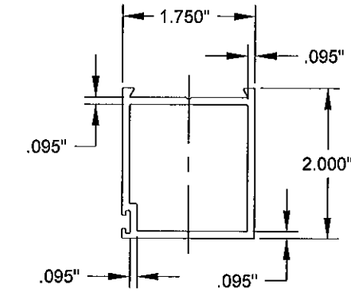

STILE, FIXED

PART NO.: 5-11-4022
MATERIAL: 6063-T5 ALUM.
SCALE: ½" = 1"

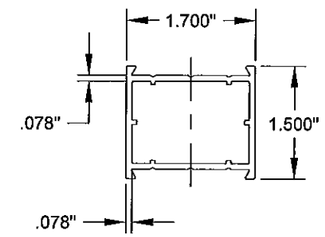

MUNTIN BAR

PART NO.: 5-11-4031
MATERIAL: 6063-T5 ALUM.
SCALE: ½" = 1"

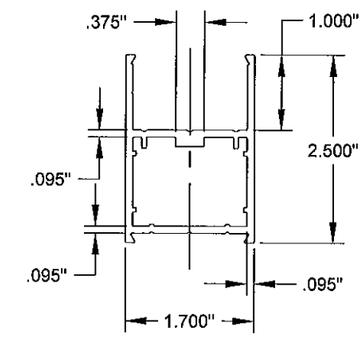

MUNTIN BAR (OPTIONAL)

PART NO.: 5-11-4032
MATERIAL: 6063-T5 ALUM.
SCALE: ½" = 1"

PRODUCT REVISED
in complying with the Florida Building Code
Acceptance No. 12-0403.06
Expiration Date 3/17/15
By Ishaq I. Chaudhri
Miami Date/Product Control

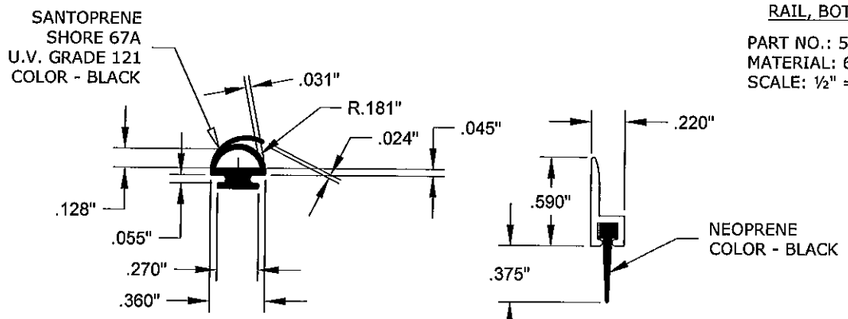

SEAL, BULB W/FIN

PART NO.: 6-11-9009
MATERIAL: ZERO INT'L. #870N
SCALE: FULL

SEAL, SIDELITE (TOP)

PART NO.: 9-99-7361
MATERIAL: ZERO INT'L. 8194AA
SCALE: FULL

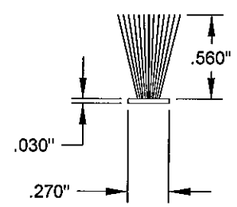

WEATHER PILE W/FIN

PART NO.: 9-99-7360
MATERIAL: ULTRAFAB SOFT
TOUCH FIN SCALE: FULL

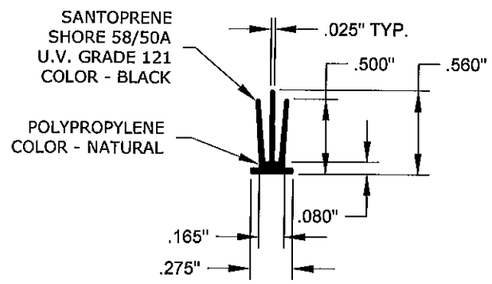

VINYL, SMOKE / AIR SEAL

PART NO.: 6-59-9001
MATERIAL: SEE ABOVE
SCALE: FULL

NOTE: ALL ALUMINUM EXTRUSIONS SHALL HAVE A MINIMUM Fu=31 ksi & Fy=26200 psi.

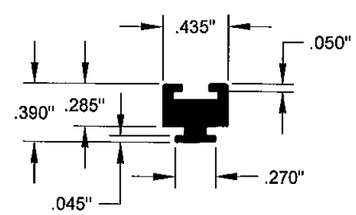

CHANNEL, WEATHER PILE

PART NO.: 6-51-9002
MATERIAL: GEON 8700 PVC
SCALE: FULL

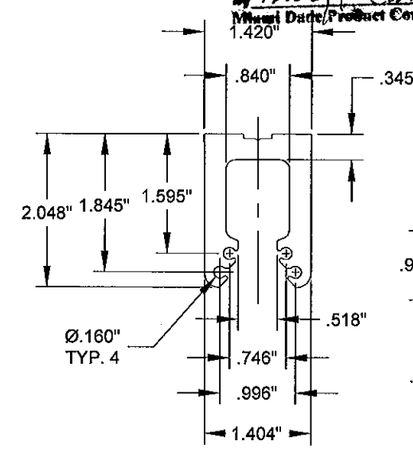

BLOCK, SHEAR

PART NO.: 5-11-4027
MATERIAL: 6063-T5 ALUM.
SCALE: ½" = 1"

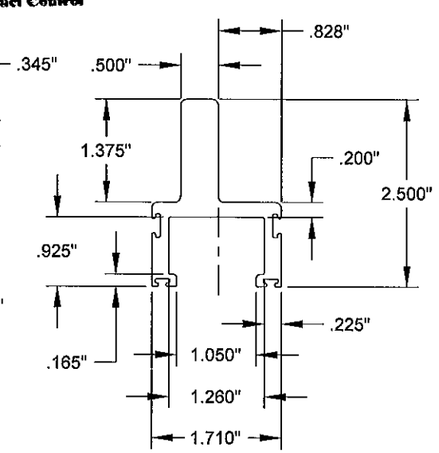

DOOR CATCH

PART NO.: 5-51-4006
MATERIAL: 6063-T5 ALUM.
SCALE: ½" = 1"

FRANK L. BENNARDO, P.E.
LICENSE
No. 46546
03/26/2012
STATE OF FLORIDA
PROFESSIONAL ENGINEER

ENGINEERING EXPRESS, INC.
160 SW 12th AVENUE
DEERFIELD BEACH, FL 33442
PH: (954) 354-0660 FAX: (954) 354-0693
WWW.ENGEXP.COM
CERT OF AUTH #9885
A FRANK L. BENNARDO, P.E., INC. INNOVATION

RECORD-USA
4324 HARGETT COURT
MONROE, NC 28110
(704) 289 - 9212

SERIES 5400 ALUMINUM AUTOMATIC SLIDING GLASS DOORS
LARGE MISSILE IMPACT RESISTANT
MIAMI-DADE NOTICE OF ACCEPTANCE

REMARKS	DRWN	CHKD	DATE
INT ISSUE	AML	KL	06/26/09
REV. PER BOCO COMMENT	KL	FLB	12/01/09
2010 FBC	KL	FLB	03/19/12

09-REU-0001
SCALE: - 02
PAGE DESCRIPTION:
-
-

17 / 23

NOTE: ALL ALUMINUM EXTRUSIONS SHALL HAVE A MINIMUM Fu=31 ksi & Fy=26200 psi.

03/27/2012 - 11:44am keithl F:\01 Project Files\Record-USA (REU)\2009\09-REU-0001 5400 LMI HR Sliders\09-REU-0001_02a 5400 LMI HR Sliders (NOA) - Revised Per Comments.dwg

CONSOLIDATED BILL OF MATERIALS

DESCRIPTION	*record-usa* PART NO.	MATERIAL	MANUFACTURER / REMARKS
TORQUE BAR ASS'Y.	4-51-0011		
WELDMENT, TORQUE BAR	4-51-0001		
PIVOT, TORQUE BAR BOTTOM	4-70-4104	2" X 2" X 3/8" ALUMINUM ANGLE	
PIVOT PIN, TORQUE BAR	4-70-1034	Ø3/8" x 1 3/8" STEEL CLEVIS PIN	
PIN, SPRING (TORQUE BAR)	9-99-3922	Ø3/16" X 1" STEEL SLOTTED SPRING PIN	
RETAINING RING, TORQUE BAR ASS'Y.	9-99-4625		ROTOR CLIP #SHR-98
BRACKET, TORQUE BAR SUPPORT	4-51-1003	3/16" C.R.S., ZINC PLATE	
PLATE, TORQUE BAR	4-51-1013	3/4" X 1 1/4" AISI 1018 COLD FINISHED FLAT BAR	
BAR, TORQUE	4-51-1014	Ø1.00" AISI 1018 ROUND STEEL BAR	
DOOR CATCH ASS'Y. - L.H.	4-51-0013		
DOOR CATCH ASS'Y. - R.H.	4-51-0027		
HOUSING, DOOR CATCH ASS'Y. - L.H.	4-51-1038	11 GA. (.1196) C.R.S., ZINC PLATE	
HOUSING, DOOR CATCH ASS'Y. - R.H.	4-51-1036	MAKE FROM 4-51-1038	
INTERLOCK, DOOR CATCH - L.H.	4-51-1039	10 GA. (.1345) C.R.S., ZINC PLATE	
INTERLOCK, DOOR CATCH - R.H.	4-51-1040	10 GA. (.1345) C.R.S., ZINC PLATE	
PLATE, DOOR INTERLOCK	4-51-1064	3/16" H.R.P.O., ZINC PLATE	
BALL PLUNGER ASS'Y.	4-70-0582		
PLUG, BALL PLUNGER	4-11-4090	Ø1 1/16" 6061-T6511 ALUMINUM ROUND BAR	
SPRING, BALL PLUNGER	9-99-5689	Ø.080 STEEL MUSIC WIRE, ZINC PLATE	
BALL, SPRING PLUNGER	9-99-0104	BALL, CHROME ALLOY STEEL, Ø 5/8"	
HOUSING, BALL PLUNGER	4-11-2001	Ø3/4" FREE CUTTING BRASS ROUND ROD	
DOOR STOP ASS'Y.	4-51-0020		
BUMPER, DOOR STOP	9-99-2598	MEDIUM-HARD SRB RUBBER, SHORE 55A, BLACK	McMASTER CARR P/N 9310K124
BRACKET, DOOR STOP	4-51-1006	3/16" C.R.S., BLACK OXIDE	
DOOR INTERLOCK ASS'Y. - L.H.	4-51-0015		
DOOR INTERLOCK ASS'Y. - R.H.	4-51-0016		
PLATE, DOOR INTERLOCK ASS'Y.	4-51-1042	7 GA. (.1793) C.R.S., ZINC PLATE	
BRACKET, INTERLOCK ASS'Y.	4-51-1041	3/16" (.1875) C.R.S., ZINC PLATE	
PLUNGER, SPRING LOADED	9-99-0113		VLIER P/N NM-55N
CARRIER ROLLER ASS'Y.	4-51-0005		
BODY, CARRIER ROLLER	9-51-0002	PA6 - POLYAMIDE (NYLON) 6	

PRODUCT REVISED
as complying with the Florida Building Code
Acceptance No. 12-0403.06
Expiration Date 3/17/15
By Miami Dade Product Control

FRANK L. BENNARDO, P.E.
#FL0043149
LICENSE
STATE OF FLORIDA
PROFESSIONAL ENGINEER
03/27/2012

ENGINEERING EXPRESS®, INC.
160 SW 12th AVENUE, #206
DEERFIELD BEACH, FL 33442
Ph: (954) 354-0660 Fax: (954) 354-0445
WWW.ENGEXP.COM
CERT OF AUTH #9885
A. FRANK L. BENNARDO, P.E., INC. INNOVATION

RECORD-USA
4324 HARGETT COURT
MONROE, NC 28110
(704) 289 - 9212

SERIES 5400 ALUMINUM AUTOMATIC SLIDING GLASS DOORS
LARGE MISSILE IMPACT RESISTANT
MIAMI-DADE NOTICE OF ACCEPTANCE

REMARKS	DRWN	CHKD	DATE
INIT ISSUE	AML	KL	06/26/09
REV. PER BOCO COMMENT	KL	FLB	12/01/09
2010 FBC	KL	FLB	03/19/12

09-REU-0001
SCALE: - 02
PAGE DESCRIPTION:
-
-

03/27/2012 - 11:44am keithl F:\01 Project Files\Record-USA (REU)\2009\09-REU-0001 5400 LMI HR Sliders\09-REU-0001_02a 5400 LMI HR Sliders (NOA) - Revised Per Comments.dwg

CONSOLIDATED BILL OF MATERIALS

DESCRIPTION	*record-usa* PART NO.	MATERIAL	MANUFACTURER / REMARKS
BALL BEARING, CARRIER ROLLER	9-07-0049	6201-Z BALL BEARING	JESA W2
RETAINING RING, CARRIER ROLLER	9-99-4624		ROTOR CLIP #DHO-32
ROLLER ASS'Y., ANTI-RISE	9-99-3922		
ROLLER, ANTI-RISE	9-51-9006	DELRIN, WHITE	
AXLE, ANTI-RISE ROLLER	4-51-7001	Ø½" TYPE 303 STAINLESS STEEL ROUND BAR	
RETAINING RING, ANTI-RISE ROLLER	9-99-4629		ROTOR CLIP #PO-50ST PA
PLATE ASS'Y. - CARRIER ROLLER	4-51-0002		
PLATE, CARRIER ROLLER	4-51-1020	10 GA. (.1345) C.R.S., ZINC PLATE	
NUT, PEM	9-99-6193		PEM #S0518-3, ZINC PLATE
PLATE SUB-ASS'Y., CARRIER ROLLER	4-51-0017		
SPACER, CARRIER ROLLER	4-51-1017	Ø⅝" O.D. X 13 GA. (.095) WALL MECHANICAL STEEL TUBING (D.O.M.)	
AXLE, CARRIER ROLLER	4-51-1021	Ø⅝" TYPE 303 STAINLESS STEEL ROUND BAR	
BRACKET, BELT BASE	4-51-1001	14 GA. (.0747) C.R.S., ZINC PLATE	
BRACKET, BELT CLASP	4-51-1002	14 GA. (.0747) C.R.S., ZINC PLATE	
CARRIER ASS'Y., SLAVE	4-51-0090		
CARRIER ASS'Y., UPPER BELT	4-51-0091		
CARRIER ASS'Y., LOWER BELT	4-51-0092		
SCREW, M6 X 10 HFHCS	9-99-1812		
SCREW, M6 X 12 HFHCS	9-99-1820		
WASHER, LOCK - 5/16"	9-99-7235		
WASHER, FLAT - 5/16"	9-99-7311		
SCREW, 5/16-18 X 1½" HHCS, GR. 8	81-0018-3726		
BRACKET, ANTI-DERAIL	4-51-1063	10 GA. (.1345) C.R.S., ZINC PLATE	
PLATE, CARRIER ASS'Y. - SLAVE	4-51-1001	¼" C.R.S., ZINC PLATE	
PLATE, BELT RETAINER (LOWER)	4-51-1019	¼" C.R.S., ZINC PLATE	
PLATE, BELT RETAINER (UPPER)	4-51-1018	¼" C.R.S., ZINC PLATE	
BRACKET, SIDELITE STRIKE	4-51-1010	11 GA. (.1196) TYPE 304 STAINLESS STEEL	
BLOCK, UPPER SIDELITE PIVOT	4-51-4152	⅝" X 1¼" 6061-T6511 EXTRUDED ALUMINUM RECTANGULAR BAR	
PLATE, NUT	4-51-1037	10 GA. (.1345) C.R.S., ZINC PLATE	
BRACKET, HEADER MOUNTING - L.H.	4-51-1055	11 GA. (.1196) C.R.S., ZINC PLATE	
BRACKET, HEADER MOUNTING - R.H.	4-51-1056	11 GA. (.1196) C.R.S., ZINC PLATE	

PRODUCT REVISED
as complying with the Florida
Building Code
Acceptance No 12-0403.06
Expiration Date 3/17/15
By Ishac L. Chaude
Miami Dade Product Control

FRANK L. BENNARDO, P.E.
LICENSE
No. 46549
STATE OF FLORIDA
PROFESSIONAL ENGINEER
03/27/2012

ENGINEERING EXPRESS
160 SW 12th AVENUE, #1106
DEERFIELD BEACH, FL 33442
PH: (954) 354-0660 FAX: (954) 354-0443
WWW.ENGEXP.COM
CERT OF AUTH #9885
A FRANK L. BENNARDO, P.E., INC. INNOVATION

RECORD-USA
4324 HARGETT COURT
MONROE, NC 28110
(704) 289 - 9212

SERIES 5400 ALUMINUM AUTOMATIC SLIDING GLASS DOORS
LARGE MISSILE IMPACT RESISTANT
MIAMI-DADE NOTICE OF ACCEPTANCE

REMARKS	DRWN	CHKD	DATE
INIT ISSUE	AML	KL	06/26/09
REV. PER BCCO COMMENT	KL	FLB	12/01/09
2010 FBC	KL	FLB	03/19/12
-	-	-	-
-	-	-	-

09-REU-0001
SCALE: - 02
PAGE DESCRIPTION:
-
-

03/27/2012 - 11:44am keithl F:\01 Project Files\Record-USA (REU)\2009\09-REU-0001 5400 LMI HR Sliders\09-REU-0001_02a 5400 LMI HR Sliders (NOA) - Revised Per Comments.dwg

CONSOLIDATED BILL OF MATERIALS

DESCRIPTION	*record-usa* PART NO.	MATERIAL	MANUFACTURER / REMARKS
END CAP, DOOR CATCH	4-51-1049	11 GA. (.1196) C.R.S., BLACK POWDER COAT	
END CAP, DOOR CATCH (POSITIVE LATCH)	4-59-1020	MAKE FROM 4-51-1019	
BRACKET, BALL PLUNGER	4-70-4342	1¼" X 1¼" X 3/16" 6063-T52 ALUMINUM ANGLE	
BLOCK, GLASS SETTING	6-11-9007	GEON 8700 PVC, DUROMETER 97 SHORE A, BLACK	
BLOCK, GLASS SPACER	6-11-9002	GEON 8700 PVC, DUROMETER 97 SHORE A, BLACK	
BOTTOM GUIDE ASS'Y.	4-51-0093		
BLOCK, BOTTOM GUIDE ASS'Y.	4-51-4267	1¾" 6061-T6 EXTRUDED ALUMINUM SQUARE BAR	
PIN, BOTTOM GUIDE	4-51-7007	Ø5/8" TYPE 304 STAINLESS STEEL ROUND BAR	
SPRING, COMPRESSION (BOTTOM GUIDE)	9-99-5693	Ø.045 TYPE 302 STAINLESS STEEL WIRE	McMASTER CARR P/N 9435K126
SCREW, SHOULDER (BOTTOM GUIDE)	9-99-1820	TYPE 18-8 STAINLESS STEEL	McMASTER CARR P/N 91327A165
BUSHING, FLANGED (BRONZE)	9-99-0233	ALLOY 932 (SAE 660) BRONZE	McMASTER CARR P/N 7815K18
BLOCK, FLUSHBOLT SUPPORT	4-51-4265	1¾" 6061-T6 EXTRUDED ALUMINUM SQUARE BAR	
BLOCK, HEX BOLT GUIDE	4-51-4266	½" X 1¼" 6061-T6511 EXTRUDED ALUMINUM RECTANGULAR BAR	
SPRING, COMPRESSION (EXIT DEVICE TOP BOLT)	9-99-5692	Ø.042 STEEL MUSIC WIRE, ZINC PLATE	McMASTER CARR P/N 9434K8
LOCK BOLT, EXIT DEVICE	4-11-1059	3/8" AISI 12L14 STEEL HEX BAR STOCK, ZINC PLATE	
HEX BOLT, THRESHOLD	4-51-7008	Ø½" TYPE 304 STAINLESS STEEL HEX BAR STOCK	
BLOCK, SHEAR (MACHINED)	4-11-4098	MAKE FROM 5-11-4027	
BLOCK, SHEAR (MACHINED)	4-51-4151	MAKE FROM 5-11-4027	
BLOCK, SHEAR (MACHINED)	4-11-4096	MAKE FROM 5-11-4027	
PLATE, BACKER	4-11-1082	7 GA. (.1793) C.R.S., ZINC PLATE	
BRACKET, ANTI-DERAIL	4-51-1063	10 GA. (.1345) C.R.S., ZINC PLATE	
ANGLE, SIDELITE PIVOT (TOP)	4-11-1086	3" X 2" X 5/16" STEEL ANGLE, SILVER METALLIC PAINT	
BUSHING, SIDELITE PIVOT (TOP)	9-99-0203	SAE 841 SINTERED BRONZE	
ANGLE, SIDELITE PIVOT (BOTTOM)	4-51-1067	3" X 2" X 5/16" STEEL ANGLE, SAFETY YELLOW PAINT	
BUSHING, SIDELITE PIVOT (BOTTOM)	4-51-7003	Ø7/8" TYPE 304 STAINLESS STEEL ROUND BAR	
DOOR INTERLOCK	4-51-7002	10 GA. (.1345) TYPE 304 STAINLESS STEEL	
MOUNTING STRAP	4-40-1002	3/16" H.R.P.O., ZINC PLATE	
WELDMENT, REINFORCEMENT CHANNEL	4-51-0029		SILVER METALLIC PAINT
CHANNEL, REINFORCEMENT (LOCK STILE)	4-51-1065	1½" X ½" X ⅛" BAR CHANNEL, M 1020 - MERCHANT QUALITY	
PLATE, REINFORCEMENT CHANNEL	4-51-1007	3/8" X 1" AISI 1018 C.R.S. FLAT BAR	
CHANNEL, REINFORCEMENT (PIVOT STILE)	4-51-1066	1½" X ½" X ⅛" BAR CHANNEL, M 1020 - MERCHANT QUALITY	SILVER METALLIC PAINT

PRODUCT REVISED
In complying with the Florida Building Code
Acceptance No 12-0403.06
Expiration Date 3/7/15
Miami Dade Product Control

FRANK L. BENNARDO, P.E.
LICENSE No. 36749
STATE OF FLORIDA
PROFESSIONAL ENGINEER
03/27/2012

ENGINEERING EXPRESS, INC.
160 SW 12th AVENUE, #205
DEERFIELD BEACH, FL 33442
Ph: (954) 354-0660 Fax: (954) 354-0442
WWW.ENGEXP.COM
CERT OF AUTH #9895
A. FRANK L. BENNARDO, P.E., INC. INNOVATION

RECORD-USA
4324 HARGETT COURT
MONROE, NC 28110
(704) 289 - 9212

SERIES 5400 ALUMINUM AUTOMATIC SLIDING GLASS DOORS
LARGE MISSILE IMPACT RESISTANT
MIAMI-DADE NOTICE OF ACCEPTANCE

REMARKS	DRWN	CHKD	DATE
INIT ISSUE	AML	KL	06/26/09
REV. PER BOCO COMMENT	KL	FLB	12/01/09
2010 FBC	KL	FLB	03/19/12

09-REU-0001
SCALE: - 02
PAGE DESCRIPTION:
-
-

03/27/2012 - 11:44am keithl F:\01 Project Files\Record-USA (REU)\2009\09-REU-0001 5400 LMI HR Sliders\09-REU-0001_02a 5400 LMI HR Sliders (NOA) - Revised Per Comments.dwg

CONSOLIDATED BILL OF MATERIALS

DESCRIPTION	*record-usa* PART NO.	MATERIAL	MANUFACTURER / REMARKS
CHANNEL, REINFORCEMENT (BEAM STILE)	4-51-1068	1½" X ½" X ⅛" BAR CHANNEL, M 1020 - MERCHANT QUALITY	SILVER METALLIC PAINT
CHANNEL, REINFORCEMENT (PIVOT STILE - SIDELITE)	4-51-1069	1½" X ½" X ⅛" BAR CHANNEL, M 1020 - MERCHANT QUALITY	SILVER METALLIC PAINT
PIN GUIDE THRESHOLD ASS'Y. - L.H.	4-51-0160		
PIN GUIDE THRESHOLD ASS'Y. - R.H.	4-51-0161		
PIN GUIDE THRESHOLD MACHINING - L.H.	4-51-4260	MAKE FROM 5-11-4008	
PIN GUIDE THRESHOLD MACHINING - R.H.	4-51-4261	MAKE FROM 5-11-4008	
PLATE, PIN GUIDE SUPPORT	4-51-7005	⅜" X 1" TYPE 303 STAINLESS STEEL RECTANGULAR BAR	
BUMPER, PIN GUIDE	9-70-0077	NYLATRON ® GS	
PIN, SIDELITE PIVOT (BOTTOM)	4-11-1031	¾" AISI 12L14 STEEL HEX BAR STOCK, ZINC PLATE	
BAR, ALIGNMENT (PIN GUIDE THRESHOLD	4-51-4009	¼" X ⅝" 6061-T5 ALUMINUM RECTANGULAR BAR	
BLOCK, SIDELITE PIVOT (BOTTOM)	4-51-4265	⅜" X 1" 6061-T5 ALUMINUM RECTANGULAR BAR	
THRESHOLD ASS'Y., BIPART	4-51-0164		
THRESHOLD MACHINING	4-51-4264	MAKE FROM 5-51-4021	
STRIKE PLATE, LOCKBOLT	4-51-7006	½" X 1" TYPE 303 STAINLESS STEEL RECTANGULAR BAR	POLYMER CORP. PROFILE 40-101
HEADER	5-51-4001	6063-T5 ALUMINUM	BONNELL ALUMINUM, INC.
COVER, HEADER	5-51-4002	6063-T5 ALUMINUM	BONNELL ALUMINUM, INC.
FILLER, HEADER SOFFIT	5-51-4003	6063-T5 ALUMINUM	BONNELL ALUMINUM, INC.
ROLLER TRACK	5-51-4004	6063-T5 ALUMINUM	BONNELL ALUMINUM, INC.
SIDE JAMB	5-60-1418	6063-T5 ALUMINUM	BONNELL ALUMINUM, INC.
FILLER, SIDE JAMB	5-60-1532	6063-T5 ALUMINUM	BONNELL ALUMINUM, INC.
PIN GUIDE, RAMPED	5-11-4008	6063-T5 ALUMINUM	BONNELL ALUMINUM, INC.
THRESHOLD, SADDLE	5-51-4021	6063-T5 ALUMINUM	BONNELL ALUMINUM, INC.
RAIL, TOP (SX PANEL)	5-51-4009	6063-T5 ALUMINUM	BONNELL ALUMINUM, INC.
RAIL, TOP (SO PANEL)	5-11-4034	6063-T5 ALUMINUM	BONNELL ALUMINUM, INC.
RAIL, BOTTOM - 6"	5-11-4036	6063-T5 ALUMINUM	BONNELL ALUMINUM, INC.
RAIL, BOTTOM - 10" (OPTIONAL)	5-51-4011	6063-T5 ALUMINUM	BONNELL ALUMINUM, INC.
STILE, TANDEM	5-11-4021	6063-T5 ALUMINUM	BONNELL ALUMINUM, INC.
STILE, FIXED	5-11-4022	6063-T5 ALUMINUM	BONNELL ALUMINUM, INC.
MUNTIN BAR	5-11-4031	6063-T5 ALUMINUM	BONNELL ALUMINUM, INC.
MUNTIN BAR (OPTIONAL)	5-11-4032	6063-T5 ALUMINUM	BONNELL ALUMINUM, INC.
DOOR CATCH	5-51-4006	6063-T5 ALUMINUM	BONNELL ALUMINUM, INC.

PRODUCT REVISED
in complying with the Florida
Building Code
Acceptance No. 12-0403.06
Expiration Date 3/17/15
By Ishaq I. Chaudhary
Miami-Dade Product Control

FRANK L. BENNARDO, P.E.
LICENSE NO. FE0046549
03/27/2012
STATE OF FLORIDA
PROFESSIONAL ENGINEER

ENGINEERING EXPRESS
160 SW 12th AVENUE, SUITE 106
DEERFIELD BEACH, FL 33442
Ph: (954) 354-0660 Fax: (954) 354-0443
WWW.ENGEXP.COM
CERT OF AUTH #8685
A. FRANK L. BENNARDO, P.E., INC. INNOVATION

RECORD-USA
4324 HARGETT COURT
MONROE, NC 28110
(704) 289 - 9212

SERIES 5400 ALUMINUM AUTOMATIC SLIDING GLASS DOORS
LARGE MISSILE IMPACT RESISTANT
MIAMI-DADE NOTICE OF ACCEPTANCE

REMARKS	DRWN	CHKD	DATE
INIT ISSUE	AML	KL	06/26/09
REV. PER BCCO COMMENT	KL	FLB	12/01/09
2010 FBC	KL	FLB	03/19/12
-	-	-	-
-	-	-	-

09-REU-0001
SCALE: - 02
PAGE DESCRIPTION:
-
-

03/27/2012 - 11:44am keithl F:\01 Project Files\Record-USA (REU)\2009\09-REU-0001 5400 LMI HR Sliders\09-REU-0001_02a 5400 LMI HR Sliders (NOA) - Revised Per Comments.dwg

CONSOLIDATED BILL OF MATERIALS

DESCRIPTION	*record-usa* PART NO.	MATERIAL	MANUFACTURER / REMARKS
BLOCK, SHEAR	5-11-4027	6063-T5 ALUMINUM	BONNELL ALUMINUM, INC.
GUTTER, HURRICANE	5-11-4044	6063-T5 ALUMINUM	BONNELL ALUMINUM, INC.
SASH, SQUARE	5-11-4040	6063-T5 ALUMINUM	BONNELL ALUMINUM, INC.
GLAZING BULB	6-11-9011	SANTOPRENE / POLYPROPYLENE COEXTRUSION	CENTRAL PLASTICS, INC.
CHANNEL, WEATHER PILE	6-51-9002	GEON 8700 PVC	UNITED PLASTICS CORP.
WEATHER PILE W/FIN	9-99-7360	ULTRAFAB SOFT TOUCH FIN	ULTRAFAB, INC. P/N W31565NK0000
VINYL, SMOKE / AIR SEAL	6-59-9001	SANTOPRENE / POLYPROPYLENE COEXTRUSION	CENTRAL PLASTICS, INC.
SEAL, BULB W/FIN	6-11-9009	SANTOPRENE SHORE 67A, U.V. GRADE 121	ZERO INTERNATIONAL #870N
SEAL, SIDELITE (TOP)	9-99-7361	NEOPRENE FIN WITH ALUMINUM HOUSING	ZERO INTERNATIONAL #8194AA
DAMPER, ROLLER TRACK	9-51-0001	EPDM SHORE 85±5A, BLACK	CENTRAL PLASTICS, INC.
FLUSHBOLT, CYLINDER OPERATED	9-99-0067	ADAMS RITE 1871-2	ADAMS RITE MANUFACTURING CO.
HEADER BOLT SET	9-99-0075	INTERNATIONAL DOOR CLOSER INC. HB-4015-N	INTERNATIONAL DOOR CLOSER INC.
MORTISE KEY CYLINDER	9-99-0068	INTERNATIONAL DOOR CLOSER INC. CZ-1001	INTERNATIONAL DOOR CLOSER INC.
MORTISE THUMBTURN	9-99-0069	INTERNATIONAL DOOR CLOSER INC. TZ-3001	INTERNATIONAL DOOR CLOSER INC.
EXIT DEVICE, G86 C.V.R.	9-99-0094	ADAMS RITE G86 C.V.R. EXIT DEVICE	ADAMS RITE MANUFACTURING CO.
ESCUTCHEON, MORTISE KEY CYLINDER	9-99-0098	ADAMS RITE 8651 ESCUTCHEON	ADAMS RITE MANUFACTURING CO.
SCREW, 5/16-18 X 1" FSHCS	81-0011-2720		
SCREW, 10-32 X 3/8" PFHMS	81-0011-0558		
SCREW, 10-32 X 1/4" PFHMS	81-0011-0554		
SCREW, 10-32 X 1/2" PFHMS	81-0011-0562		
SCREW, 1/4-20 X 3/8" BFHCS	81-0017-2658		
SCREW, M6 X 16 HFHCS	9-99-1813		
SCREW, 1/4-20 X 1/2" PFHMS	81-0011-0662		
LOCK WASHER, SPLIT, #10	9-99-7249		
SCREW,10-32 X 3/8" SHCS	81-0016-2258		
WASHER, 1/4" FLAT	9-99-7346		
WASHER, 1/4" LOCK SPLIT	9-99-7161		
SCREW, 1/4-20 X 1" HHMS - GR. 8	81-0088-3670		
SCREW, 10-32 X 1/2" SHCS	81-0016-2562		
SCREW, 8-18 X 1/2" PFHSMS, TYPE B	81-3511-0412-DB		
SCREW, 1/4-20 X 3/8" SFCHCS	81-0011-2658		

PRODUCT REVISED
In complying with the Florida
Building Code
Acceptance No. 12-0403.06
Expiration Date 3/17/15
By Ishaq I. Chanda
Miami Dade Product Control

FRANK L. BENNARDO, P.E.
LICENSE No. 46549
STATE OF FLORIDA
PROFESSIONAL ENGINEER
03/27/2012

ENGINEERING EXPRESS®
160 SW 12th AVENUE #106
DEERFIELD BEACH, FL 33442
PH: (954) 354-0660 FAX: (954) 354-0443
WWW.ENGEXP.COM
CERT OF AUTH #9885
A FRANK L. BENNARDO, P.E., INC. INNOVATION

RECORD-USA
4324 HARGETT COURT
MONROE, NC 28110
(704) 289 - 9212

SERIES 5400 ALUMINUM AUTOMATIC SLIDING GLASS DOORS
LARGE MISSILE IMPACT RESISTANT
MIAMI-DADE NOTICE OF ACCEPTANCE

REMARKS	DRWN	CHKD	DATE
INIT ISSUE	AML	KL	06/26/09
REV. PER BCCO COMMENT	KL	FLB	12/01/09
2010 FBC	KL	FLB	03/19/12
-	-	-	-
-	-	-	-

09-REU-0001
SCALE: - 02
PAGE DESCRIPTION:
-
-

23
22

F:\01 Project Files\Record-USA (REU)\2009\09-REU-0001 5400 LMI HR Sliders\09-REU-0001_02a 5400 LMI HR Sliders (NOA) - Revised Per Comments.dwg
03/27/2012 - 11:44am keithl

CONSOLIDATED BILL OF MATERIALS

DESCRIPTION	*record-usa* PART NO.	MATERIAL	MANUFACTURER / REMARKS
SCREW, ¼-20 X 1" SFCHCS	81-0011-2670		
SCREW, 10-24 X ¾" PFHSMS, TYPE 23	81-4411-0516		
SCREW, ¼-20 X 3" PPHMS	81-0014-0688		
SCREW, ¼-20 X ¾" HWHMS, GR. 8	81-0017-3666		
SCREW, ¼-20 X ⅜" BSHCS - S.S.	81-0016-2658		
SCREW, ¼-20 X 1" BSHCS - S.S.	81-0014-2670		
SCREW, ¼-20 X ½" HWHMS, GR. 8	81-0017-3662		
SCREW, ¼-20 X ⅝" HWHMS, GR. 8	81-0017-3664		
SCREW, 10-32 X ½" PFHMS	81-0011-0562		
SCREW, ¼-20 X ¾" HHMS, GR. 5 W/NYLOC STRIP	81-0718-3666		

PRODUCT REVISED
In complying with the Florida
Building Code
Acceptance No. 12-0403.06
Expiration Date MAR 19, 2015
By Ishay I. Chavez
Miami Dade Product Control

FRANK L. BENNARDO, P.E.
LICENSE No. 46549
STATE OF FLORIDA
PROFESSIONAL ENGINEER
03/27/2012

ENGINEERING EXPRESS, INC.
160 SW 12th AVENUE, SUITE 106
DEERFIELD BEACH, FL 33442
Ph: (954) 354-0660 Fax: (954) 354-0443
WWW.ENGEXP.COM
CERT OF AUTH #9885
A. FRANK L. BENNARDO, P.E., INC. INNOVATION

RECORD-USA
4324 HARGETT COURT
MONROE, NC 28110
(704) 289 - 9212

SERIES 5400 ALUMINUM AUTOMATIC SLIDING GLASS DOORS
LARGE MISSILE IMPACT RESISTANT
MIAMI-DADE NOTICE OF ACCEPTANCE

REMARKS	DRWN	CHKD	DATE
INIT ISSUE	AML	KL	06/28/09
REV. PER BCCO COMMENT	KL	FLB	12/01/09
2010 FBC	KL	FLB	03/19/12
-	-	-	-
-	-	-	-

09-REU-0001
SCALE: - 02
PAGE DESCRIPTION:
-
-

03/27/2012 - 11:45am keithl F:\01 Project Files\Record-USA (REU)\2009\09-REU-0001 5400 LMI HR Sliders\09-REU-0001_02a 5400 LMI HR Sliders (NOA) - Revised Per Comments.dwg