MIAMI-DADE COUNTY
PRODUCT CONTROL SECTION
11805 SW 26 Street, Room 208
Miami, Florida 33175-2474
T (786) 315-2590 F (786) 315-2599
www.miamidade.gov/economy

DEPARTMENT OF REGULATORY AND ECONOMIC RESOURCES (RER)
BOARD AND CODE ADMINISTRATION DIVISION

NOTICE OF ACCEPTANCE (NOA)

HMF Express, LLC
2501 Northcase Parkway, S. E.
Wilmington, NC 28405

SCOPE:

This NOA is being issued under the applicable rules and regulations governing the use of construction materials. The documentation submitted has been reviewed and accepted by Miami-Dade County RER - Product Control Section to be used in Miami Dade County and other areas where allowed by the Authority Having Jurisdiction (AHJ).

This NOA shall not be valid after the expiration date stated below. The Miami-Dade County Product Control Section (In Miami Dade County) and/or the AHJ (in areas other than Miami Dade County) reserve the right to have this product or material tested for quality assurance purposes. If this product or material fails to perform in the accepted manner, the manufacturer will incur the expense of such testing and the AHJ may immediately revoke, modify, or suspend the use of such product or material within their jurisdiction. RER reserves the right to revoke this acceptance, if it is determined by Miami-Dade County Product Control Section that this product or material fails to meet the requirements of the applicable building code.

This product is approved as described herein, and has been designed to comply with the Florida Building Code, including the High Velocity Hurricane Zone.

DESCRIPTION: HMF Series Outswing Steel Commercial Door-LMI

APPROVAL DOCUMENT: Drawing No. **HMF001**, titled "Series OS Flush Steel Door"", sheets 1 through 15 of 15, prepared by Building Drops Inc., dated 10/12/09 and last revised on 11-20-2012, signed and sealed by Hermes F. Norero, P.E., bearing the Miami-Dade County Product Control Revision stamp with the Notice of Acceptance number and expiration date by the Miami-Dade County Product Control Section.

MISSILE IMPACT RATING: Large and Small Missile Impact Resistant

Limitations:

1. Steel Door frame must be min 16 ga (.053") and door slab can be 16 ga or 18 ga steel (see spec sheet 1).
2. Dorma HC1300 removable mullion thickness must be min 5/16" w/ min Fy= 46 ksi, installed per sheet 6.
3. Up to 4" face grouted Header may be used within the overall frame height = 87.875"

LABELING: Each unit shall bear a permanent label with the manufacturer's name or logo, city, state and series and following statement: "Miami-Dade County Product Control Approved", noted herein.

RENEWAL of this NOA shall be considered after a renewal application has been filed and there has been no change in the applicable building code negatively affecting the performance of this product.

TERMINATION of this NOA will occur after the expiration date or if there has been a revision or change in the materials, use, and/or manufacture of the product or process. Misuse of this NOA as an endorsement of any product, for sales, advertising or any other purposes shall automatically terminate this NOA. Failure to comply with any section of this NOA shall be cause for termination and removal of NOA.

ADVERTISEMENT: The NOA number preceded by the words Miami-Dade County, Florida, and followed by the expiration date may be displayed in advertising literature. If any portion of the NOA is displayed, then it shall be done in its entirety.

INSPECTION: A copy of this entire NOA shall be provided to the user by the manufacturer or its distributors and shall be available for inspection at the job site at the request of the Building Official.

This NOA **revises & supersedes NOA # 09-0615.02** and consists of this page 1 and evidence pages E-1, as well as approval document mentioned above.

The submitted documentation was reviewed by **Ishaq I. Chanda, P.E.**

MIAMI-DADE COUNTY APPROVED

12/16/12

NOTICE OF ACCEPTANCE: EVIDENCE SUBMITTED

A. DRAWINGS

1. Manufacturer's parts drawings and sections (Submitted under file # **09-0615.02**)
2. Drawing No. **HMF001**, titled "Series OS Flush Steel Door"", sheets 1 through 15 of 15, prepared by Building Drops Inc., dated 10/12/09 and last revised on 11-20-2012, signed and sealed by Hermes F. Norero, P. E.

B. TESTS (Submitted under file # **09-0615.02 / #03-0916.01)**

1. Test reports on: 1) Air Infiltration Test, per FBC, TAS 202-94
   2) Uniform Static Air Pressure Test, Loading per FBC TAS 202-94
   3) Water Resistance Test, per FBC, TAS 202-94
   4) Large Missile Impact Test per FBC, TAS 201-94
   5) Cyclic Wind Pressure Loading per FBC, TAS 203-94
   6) Forced Entry Test, per FBC 2411 3.2.1, TAS 202-94

   along with marked-up drawings and installation diagram of outswing steel door, prepared by Certified Testing Laboratories Architectural Division, Test Report No. **CTLA–1089W** dated 04/21/03, signed and sealed by Ramesh Patel, P. E.

C. CALCULATIONS

1. Anchor verification calculations and structural analysis, complying with FBC-2010, prepared Building Drops Inc., dated 04/03/12 and last revised on 11-20-2012, signed and sealed by Hermes F. Norero. P. E.

D. QUALITY ASSURANCE

1. Miami Dade Department of Regulatory and Economic Resources (RER).

E. MATERIAL CERTIFICATIONS

1. Tensile test report prepared by prepared by Certified Testing Lab., Test Report No. CTL# **0574J,** dated June 26, 2003, signed and sealed by Ramesh, P. E.
2. Notice of Acceptance No. **11-1222.01** issued to Carpenter Company for "EPS Insulation", expiring on 04/11/17

F. STATEMENTS

1. Statement letter of conformance and letter of no financial interest, prepared by Building Drops Inc., dated 04/03/12, signed and sealed by Hermes F. Norero, P. E.
2. Statement letter dated 11/13/12, issued by HMF Express, LLC of legal acquisition of NOA # 03-0916.01(Benchmark HMF) and test report CTLA-1009W(R), machinery, along know how fabrication of product since June 02, 2006 through Asset Purchase Agreement, signed by Bob Darch, President, HMF Express.
3. Statement letter dated 11/16/12, issued by Benchmark HMF, Therma Tru Corp. of legal sales of asset of NOA # 03-0916.01(BenchMark HMF) and test report CTLA-1009W(R), machinery, along know how fabrication of product since June 02, 2006 through Asset Purchase Agreement and as part of sale given up all rights to the referenced documents and request to rescind the referenced NOA, signed by Steve Jasperson, Code & Regulatory Compliance Manager.
4. Lab compliance as part of the above referenced test report.

G. OTHER

1. This NOA **revises & supersedes NOA # 09-0615.02**, expiring on AUG 26, 2014.
2. Asset Purchase Agreement dated June 02, 2006 between HMF Express, LLC (Buyer) & Benchmark HMF, Therma-Tru Corp (Seller).

Ishaq I. Chanda

Ishaq I. Chanda, P.E.
Product Control Examiner
NOA No. 12-0410.13
Expiration Date: August 26, 2014
Approval Date: December 13, 2012

HMF EXPRESS, LLC

OUTSWING FLUSH STEEL COMMERCIAL DOOR

INSTALLATION NOTES:

1. ONE (1) INSTALLATION ANCHOR IS REQUIRED AT EACH ANCHOR LOCATION SHOWN.
2. THE NUMBER OF INSTALLATION ANCHORS DEPICTED IS THE MINIMUM NUMBER OF ANCHORS TO BE USED FOR PRODUCT INSTALLATION.
3. INSTALL INDIVIDUAL INSTALLATION ANCHORS WITHIN A TOLERANCE OF ±1/16 INCH OF THE DEPICTED LOCATION IN THE ANCHOR LAYOUT DETAIL (I.E., WITHOUT CONSIDERATION OF TOLERANCES). TOLERANCES ARE NOT CUMULATIVE FROM ONE INSTALLATION ANCHOR TO THE NEXT.
4. SHIM AS REQUIRED AT EACH INSTALLATION ANCHOR WITH LOAD BEARING SHIM(S). MAXIMUM ALLOWABLE SHIM STACK TO BE 1/4 INCH. SHIM WHERE SPACE OF 1/16 INCH OR GREATER OCCURS. SHIM(S) SHALL BE CONSTRUCTED OF HIGH DENSITY PLASTIC OR BETTER.
5. REFER TO SHEET 3 & 4 FOR ANCHOR TYPE AND SPACING DETAILS.
6. MINIMUM EMBEDMENT AND EDGE DISTANCE EXCLUDE WALL FINISHES, INCLUDING BUT NOT LIMITED TO STUCCO, FOAM, BRICK VENEER, AND SIDING.
7. INSTALLATION ANCHORS AND ASSOCIATED HARDWARE MUST BE MADE OF CORROSION RESISTANT MATERIAL OR HAVE A CORROSION RESISTANT COATING.
8. FOR HOLLOW BLOCK AND GROUT FILLED BLOCK, DO NOT INSTALL INSTALLATION ANCHORS INTO MORTAR JOINTS. EDGE DISTANCE IS MEASURED FROM FREE EDGE OF BLOCK OR EDGE OF MORTAR JOINT INTO FACE SHELL OF BLOCK.
9. INSTALLATION ANCHORS SHALL BE INSTALLED IN ACCORDANCE WITH ANCHOR MANUFACTURER'S INSTALLATION INSTRUCTIONS, AND ANCHORS SHALL NOT BE USED IN SUBSTRATES WITH STRENGTHS LESS THAN THE MINIMUM STRENGTH SPECIFIED BY THE ANCHOR MANUFACTURER.
10. INSTALLATION ANCHOR CAPACITIES FOR PRODUCTS HEREIN ARE BASED ON SUBSTRATE MATERIALS WITH THE FOLLOWING PROPERTIES:
    A. WOOD - MINIMUM SPECIFIC GRAVITY OF 0.55.
    B. CONCRETE -MINIMUM COMPRESSIVE STRENGTH OF 3000 PSI.
    C. CMU - UNIT STRENGTH CONFORMS TO ASTM C-90 (MIN 2.0 KSI COMPRESSIVE STRENGTH).
    D. GROUT-FILLED CMU - UNIT STRENGTH CONFORMS TO ASTM C-90 (MIN 2.0 KSI COMPRESSIVE STRENGTH) & GROUT CONFORMS TO ASTM C 476. GROUT SHALL HAVE MINIMUM COMPRESSIVE STRENGTH OF 2000 PSI. SEE FBC SECTION 2105.2.2.1.2 (3) FOR GROUTED MASONRY REQUIREMENTS.
    E. STEEL - MINIMUM 20 GA. (33 MILS), MINIMUM 33 KSI TENSILE YIELD STRENGTH.

GENERAL NOTES:

1. THE PRODUCT SHOWN HEREIN IS DESIGNED AND MANUFACTURED TO COMPLY WITH THE 2010 FLORIDA BUILDING CODE (FBC), INCLUDING HVHZ AND HAS BEEN EVALUATED ACCORDING TO THE FOLLOWING:
    - TAS 201-94
    - TAS 202-94
    - TAS 203-94
2. ADEQUACY OF THE EXISTING STRUCTURAL CONCRETE/MASONRY AND 2X FRAMING AS A MAIN WIND FORCE RESISTING SYSTEM CAPABLE OF WITHSTANDING AND TRANSFERRING APPLIED PRODUCT LOADS TO THE FOUNDATION IS THE RESPONSIBILITY OF THE ENGINEER OR ARCHITECT OF RECORD FOR THE PROJECT OF INSTALLATION.
3. 1X AND 2X BUCKS (WHEN USED) SHALL BE DESIGNED AND ANCHORED TO PROPERLY TRANSFER ALL LOADS TO THE STRUCTURE. BUCK DESIGN AND ANCHOR LAYOUT IS THE RESPONSIBILITY OF THE ENGINEER OR ARCHITECT OF RECORD FOR THE PROJECT OF INSTALLATION.
4. THE INSTALLATION DETAILS DESCRIBED HEREIN ARE GENERIC AND MAY NOT REFLECT ACTUAL CONDITIONS FOR A SPECIFIC IF SITE CONDITIONS CAUSE INSTALLATION TO DEVIATE FROM THE REQUIREMENTS DETAILED HEREIN, A LICENSED ENGINEER OR ARCHITECT SHALL PREPARE SITE SPECIFIC DOCUMENTS FOR USE WITH THIS DOCUMENT IN NON-HVHZ AREA. IN HVHZ AREA, ONE TIME PRODUCT APPROVAL TO BE OBTAINED FROM MIAMI-DADE (PERA) OR AUTHORITY HAVING JURSIDICTION (AHJ).
5. THIS PRODUCT IS LARGE AND SMALL MISSILE IMPACT RESISTANT APPROVED IMPACT PROTECTIVE SYSTEM **IS NOT REQUIRED** ON THIS PRODUCT IN AREAS REQUIRING IMPACT RESISTANCE.
6. STEEL COMPONENTS SHALL BE COATED OR PROVIDED WITH CORROSION RESISTANCE PROTECTION IN CONFORMANCE WITH THE MATERIAL PROTECTION PROVISIONS OF FBC SECTION 2220.
7. DOOR FRAME MATERIAL:
    7.1. MIN. 16 GA. STEEL (.053" MIN.)
        - MIN. Fy = 39,200 PSI
        - MIN. Fu = 52,100 PSI
8. DOOR PANEL
    8.1. 18 GA. FACE SHEET
        - MIN. Fy = 21,400 PSI
        - MIN. Fu = 41,900 PSI
    8.2 16 GA. FACE SHEET
        - MIN. Fy = 39,200 PSI
        - MIN. Fu = 52,100 PSI
9. SEE SHEET 4 FOR DOOR LEAF CONSTRUCTION, SEE SHEET 5 FOR DOOR FRAME CONSTRUCTION.
10. DESIGNATION "X" STANDS FOR THE FOLLOWING:
    "X" - OPERABLE PANEL

TABLE OF CONTENTS		
SHEET	REVISION	SHEET DESCRIPTION
1	D	INSTALLATION & GENERAL NOTES
2	D	ELEVATIONS
3	D	ANCHOR LAYOUTS & NOTES (I)
4	D	ANCHOR LAYOUTS & NOTES (II)
5	D	18 GA. & 16 GA. DOOR PANEL CONSTRUCTION
6	D	FRAME NOTES & MULLION DETAILS
7	D	VERTICAL SECTIONS
8	D	HORIZONTAL SECTIONS (I)
9	D	HORIZONTAL SECTIONS (II)
10	D	HORIZONTAL SECTIONS (III)
11	D	COMPONENTS (I)
12	D	COMPONENTS (II)
13	D	STIFFENER DETAILS
14	D	COMPONENTS, DETAILS & BILL OF MATERIALS
15	D	QUALIFIED EMBOSSED PANEL CONFIGURATIONS

MIAMI DADE/FLORIDA BUILDING CODE DESIGN PRESSURES			
HARDWARE	*WHERE WATER INFILTRATION IS NOT REQUIRED OR IS PROTECTED BY OVERHANG	WHERE WATER INFILTRATION REQUIREMENT IS NEEDED OR IS NOT PROTECTED BY OVERHANG	MISSILE IMPACT RATING
Z E CORBIN/RUSSWIN 26D HEAVY DUTY LOCKSET CORBIN/RUSSWIN DL3000 SERIES CYLINDRICAL DEAD LOCK	*+/- 80 PSF	NOT APPROVED	LARGE AND SMALL MISSILE IMPACT RATED
CORBIN/RUSSWIN ML2000 SERIES MORTISE LOCK & DEADBOLT W/ LEVER	*+/- 80 PSF	NOT APPROVED	
DORMA 9300 SERIES RIM DEVICE W/ PANIC BAR & REMOVABLE F1300 MULLION	*+/- 80 PSF	NOT APPROVED	
DORMA 9400 SERIES SURFACE VERTICAL RODS W/ PANIC BAR	*+/- 80 PSF	NOT APPROVED	

*NOTE: UNIT SHALL BE INSTALLED AT LOCATION PROTECTED BY OVERHANG SUCH THAT OVERHANG RATIO (OH) = OH LENGTH /OH HEIGHT GREATER THAN 1.

PRODUCT REVISED as complying with the Florida Building Code
Acceptance No. 12-0410.03
Expiration Date Aug 26 2014
By Isley L. Lacayo
Miami Dade Product Control

HMF EXPRESS
2501 NORTHCHASE PKWY SE
WILMINGTON, NC 28405
PH: (866) 452-1845 FX: (910) 452-1848

TITLE: OS FLUSH STEEL DOOR INSTALLATION & GENERAL NOTES

PREPARED BY:
BUILDING DROPS, INC.
398 E. DANIA BEACH BLVD. #338
DANIA BEACH, FL 33004
PH: (954) 399-8478 FX: (954) 744-4738

REVISIONS

NO.	DESCRIPTION	BY	DATE
A	UPDATED TABLE OF CONTENTS	JLR	10.02.09
B	UPDATED PER MD COMMENT	JLA	01.14.10
D	2010 FBC CODE UPDATES + OPTIONS	MS	02.24.12

11-20-2012
HERMES F. NORENO, P.E.
FLORIDA P. E. NO. 73778
BUILDING DROPS, INC.
398 E. DANIA BEACH BLVD. #338
DANIA BEACH, FLORIDA 33004
FBPE CERT. OF AUTHORIZATION NO. 29578

DATE: 06.09.09
DWN BY: GRN
CHK BY: HN
SCALE: NTS

DWG #: HMF001

SHEET: 1 OF 15

s:\projects\hmf express\mdp-12-0215 (18 ga. flush 72 outswing opaque steel commercial door)\dwgs\hmf001-opaque flush steel commercial door.dwg 11/20/2012 9:04:49 AM gr

NOTE: SEE SHEET 14 FOR QUALIFIED EMBOSSED PANEL CONFIGURATIONS

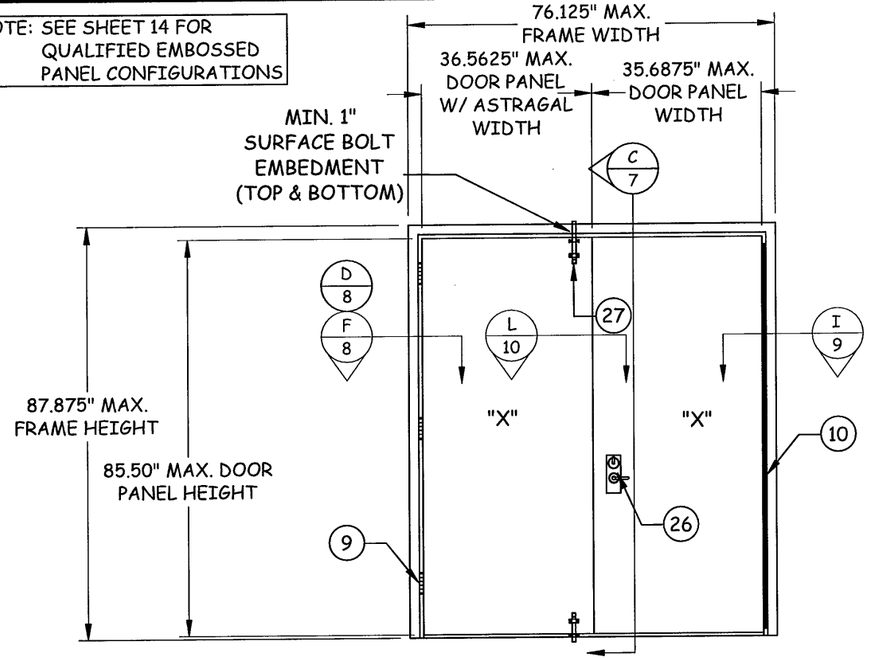

ELEVATION

(INTERIOR VIEW)

CORBIN/RUSSWIN ML2000 SERIES MORTISE LOCK

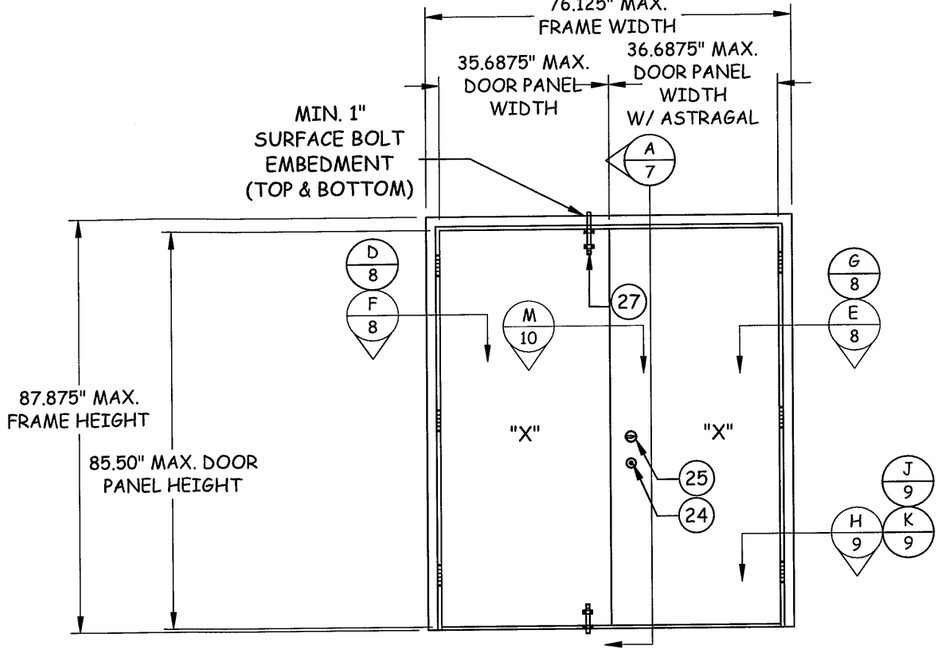

ELEVATION

(INTERIOR VIEW)

CORBIN/RUSSWIN CORB 26D HEAVY DUTY CYLINDRICAL LOCKSET DL3000 26DSS CYLINDRICAL DEAD LOCK

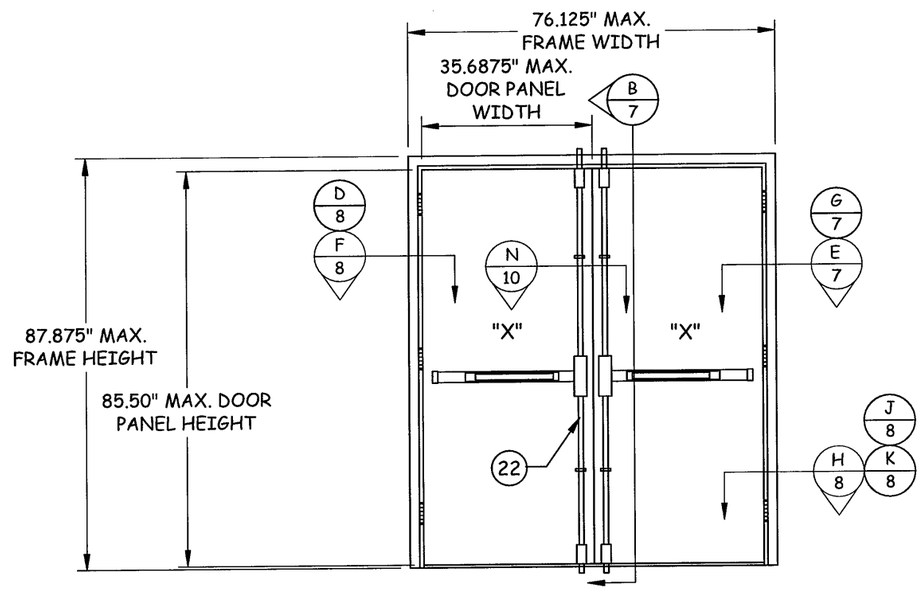

ELEVATION

(INTERIOR VIEW)

DORMA 9400 VERTICAL RODS W/ PUSH BAR

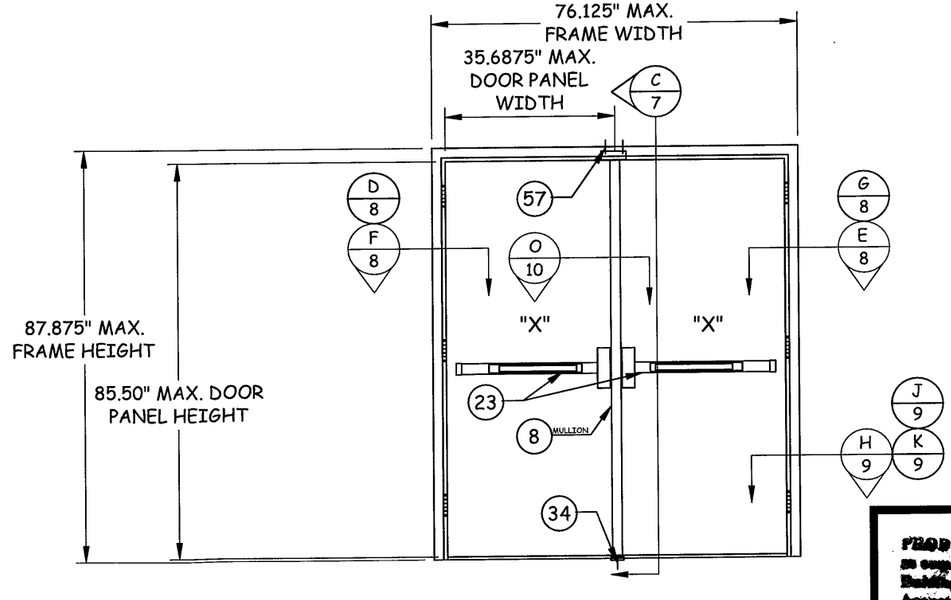

ELEVATION

(INTERIOR VIEW)

DORMA 9300 RIM DEVICE W/ PANIC BAR & DORMA REMOVABLE MULLION F-1300

PRODUCT REVISED
as complying with the Florida Building Code
Acceptance No 12-0410.03
Expiration Date 8/26/14
By Kheg L. Chanda
Miami Dade Product Control

HMF EXPRESS
2501 NORTHCHASE PKWY SE
WILMINGTON, NC 28405
PH: (866) 452-1845 FX: (910) 452-1848

TITLE: OS FLUSH STEEL DOOR ELEVATIONS

PREPARED BY:
BUILDING DROPS, INC.
398 E. DANIA BEACH BLVD. #338
DANIA BEACH, FL 33004
PH: (954) 399-8478 FX: (954) 744-4738

REVISIONS

NO.	DESCRIPTION	BY	DATE
B	UPDATED PER MD COMMENT	MS	01.13.10
C	UPDATED PER MD COMMENT	KSD	02.11.10
D	2010 FBC CODE UPDATES + OPTIONS	MS	02.24.12

11-20-2012
HERMES F. NORERO, P.E.
FLORIDA P. E. NO. 73778
BUILDING DROPS, INC.
398 E. DANIA BEACH BLVD. #338
DANIA BEACH, FL 33004
FBPE CERT. OF AUTHORIZATION NO. 29578

DATE: 15
DWN BY: GRN
CHK BY: HN
SCALE: NTS

DWG #: HMF001

SHEET: 2 OF 15

s:\projects\hmf express\md-p-12-0215 (18 ga. flush 72 outswing opaque steel commercial door)\dwgs\hmf001-opaque flush steel comm\rev2012\04-03.dwg

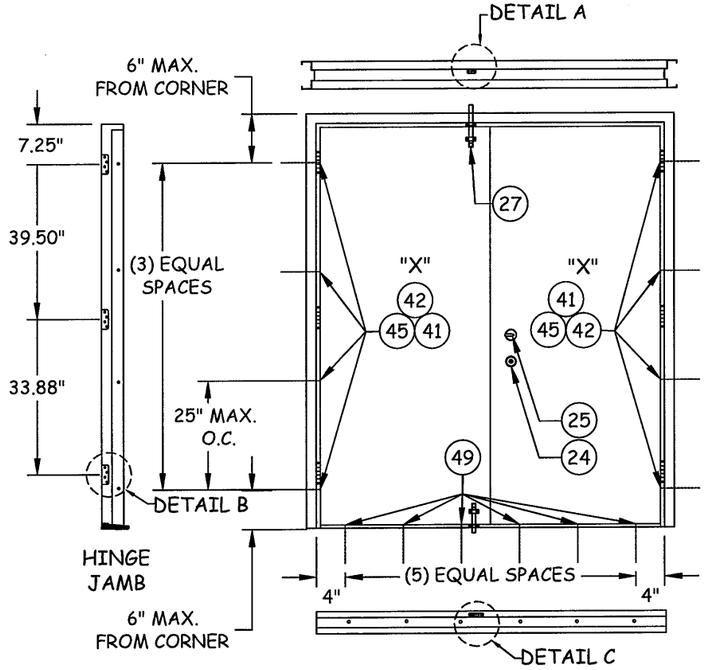

ANCHOR LAYOUT

WELDED EMA ANCHORS OR BUTTERFLY ANCHORS INTO CONCRETE/MASONRY, SEE NOTE 1.

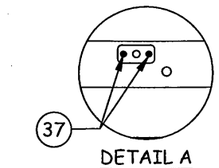

DETAIL A
SURFACE BOLT
STRIKE AT HEADER

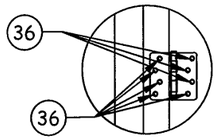

DETAIL B
TYP. HINGE DETAIL

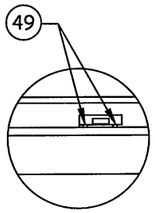

DETAIL C
SURFACE BOLT
STRIKE AT THRESHOLD

NOTE: THE SURFACE BOLTS MUST BE USED WITH CORBIN/RUSSWIN ML2000 SERIES MORTISE LOCK & CORBIN/RUSSWIN CORB 26D HEAVY DUTY CYLINDRICAL LOCK LOCKSET & DL3000 HEAVY DUTY CYLINDRICAL DEAD LOCK

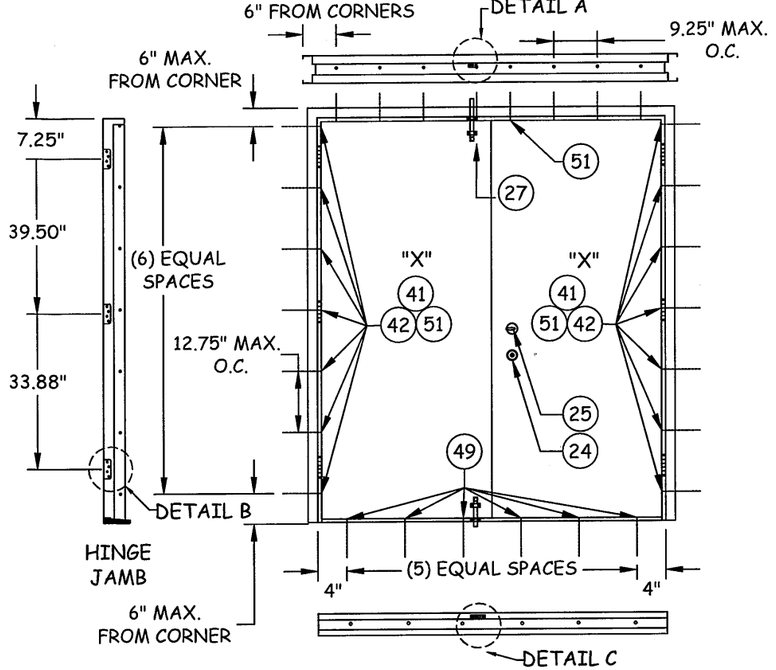

ANCHOR LAYOUT

WELDED EMA ANCHORS OR BUTTERFLY ANCHORS INTO WOOD SUBSTRATES, SEE NOTE 2.

INSTALLATION NOTES:

1. INSTALLATION INTO CONCRETE/MASONRY SUBSTRATES WHICH UTILIZE HMF EXPRESS EMA WELDED ANCHORS (ITEM #41) OR EMA BUTTERFLY ANCHORS (ITEM #42) SHALL BE FASTENED WITH 3/8" DYNA BOLTS BY ITW RED HEAD. INSTALLATION SHALL MAINTAIN THE FOLLOWING:
   1.1. MINIMUM EMBEDMENT OF 1 1/2"
   1.2. MINIMUM EDGE DISTANCE OF 2 1/4"

2. INSTALLATION INTO WOOD SUBSTRATES WHICH UTILIZE HMF EXPRESS EMA WELDED ANCHORS (ITEM #41) OR EMA BUTTERFLY ANCHORS (ITEM #42) SHALL BE FASTENED WITH 3/8" SLOTTED FLAT HEAD LAG SCREWS. INSTALLATION SHALL MAINTAIN THE FOLLOWING:
   2.1. MINIMUM EMBEDMENT OF 3"
   2.2. MINIMUM EDGE DISTANCE OF 1 1/2"

3. INSTALLATION INTO MIN. 20 GA. STEEL STUD SUBSTRATES WHICH UTILIZE HMF EXPRESS WOOD/METAL STUD ANCHORS (ITEM #44) SHALL BE FASTENED WITH FOUR (4) 1/4-14 ITW TEK SCREWS PER WOOD/METAL STUD ANCHOR. INSTALLATION SHALL MAINTAIN THE FOLLOWING:
   3.1. MINIMUM PENETRATION OF 3 THREADS BEYOND STEEL STRUCTURE
   3.2. MINIMUM EDGE DISTANCE OF 1/2"

4. INSTALLATION INTO WOOD SUBSTRATES WHICH UTILIZE HMF EXPRESS WOOD/METAL STUD ANCHORS (ITEM #44) SHALL BE FASTENED WITH FOUR (4) #8 WOOD SCREWS PER WOOD/METAL STUD ANCHOR. INSTALLATION SHALL MAINTAIN THE FOLLOWING:
   4.1. MINIMUM EMBEDMENT OF 1 1/2"
   4.2. MINIMUM EDGE DISTANCE OF 3/4"

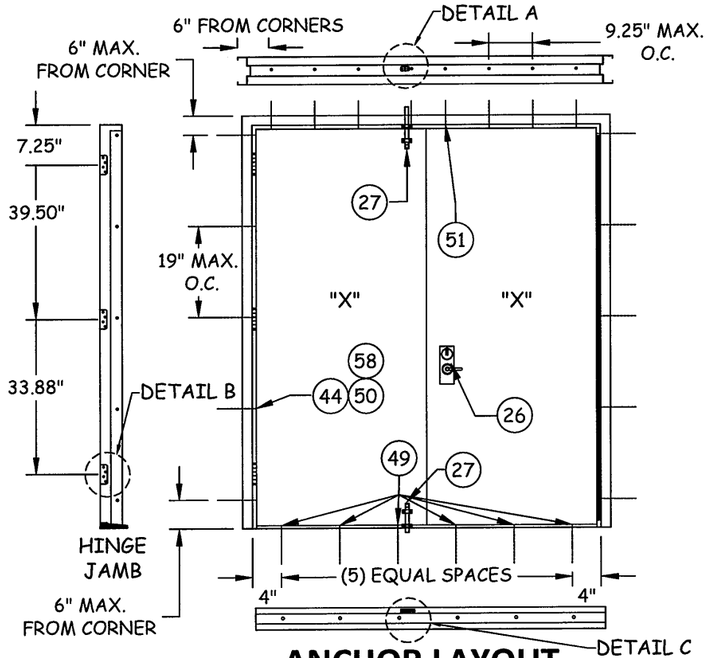

ANCHOR LAYOUT

JAMBS WOOD/METAL STUD ANCHORS, SEE NOTES 3 OR 4
HEAD 3/8" LAG SCREW SEE NOTE 2

PRODUCT REVISED
to complying with the Florida Building Code
Acceptance No. 12-0410.13
Expiration Date 9/26/17
By Ghag L. Chavda
Miami Dade Product Control

HMF EXPRESS
2501 NORTHCHASE PKWY SE
WILMINGTON, NC 28405
PH: (866) 452-1845 FX: (910) 452-1848

TITLE: OS FLUSH STEEL DOOR ANCHOR LAYOUTS & NOTES (I)

PREPARED BY:
BUILDING DROPS, INC.
398 E. DANIA BEACH BLVD. #338
DANIA BEACH, FL 33004
PH: (954) 399-8478 FX: (954) 744-4738

REVISIONS

NO.	DESCRIPTION	BY	DATE
A	UPDATED NOTES 7. PER M-D COMMENT	JLR	10.02.09
B	UPDATED PER MD COMMENT	MS	01.13.10
C	UPDATED PER MD COMMENT	KSD	02.11.10
D	2010 FBC CODE UPDATES + OPTIONS	MS	02.24.12

12-30-2012

HERMES F. NORERO, P.E.
FLORIDA P.E. NO. 75776
BUILDING DROPS, INC.
398 E. DANIA BEACH BLVD. #338
DANIA BEACH, FLORIDA 33004
FBPE CERT. OF AUTHORIZATION NO. 29578

DATE: 06.09.09
DWN BY: GRN
CHK BY: HN
SCALE: NTS

DWG #: HMF001

SHEET: 3 OF 15

s:\projects\hmf express\md-p-12-0215 (18 ga. flush 72 outswing opaque steel commercial door)\dwgs\hmf001 -opaque flush steel commercial door 2012.dwg

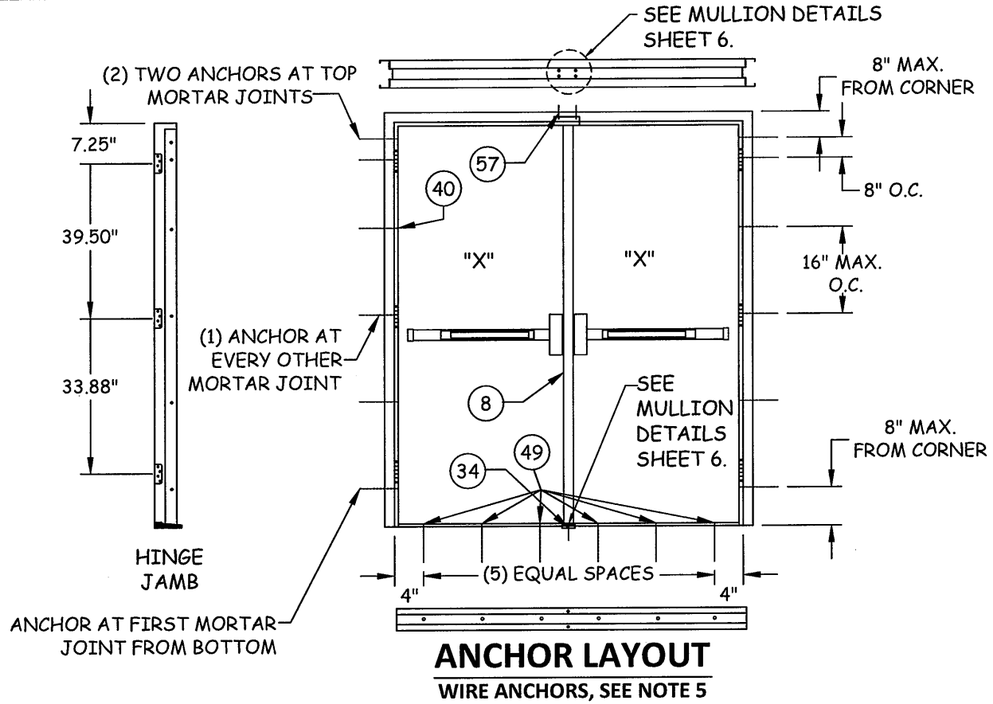

ANCHOR LAYOUT

WIRE ANCHORS, SEE NOTE 5

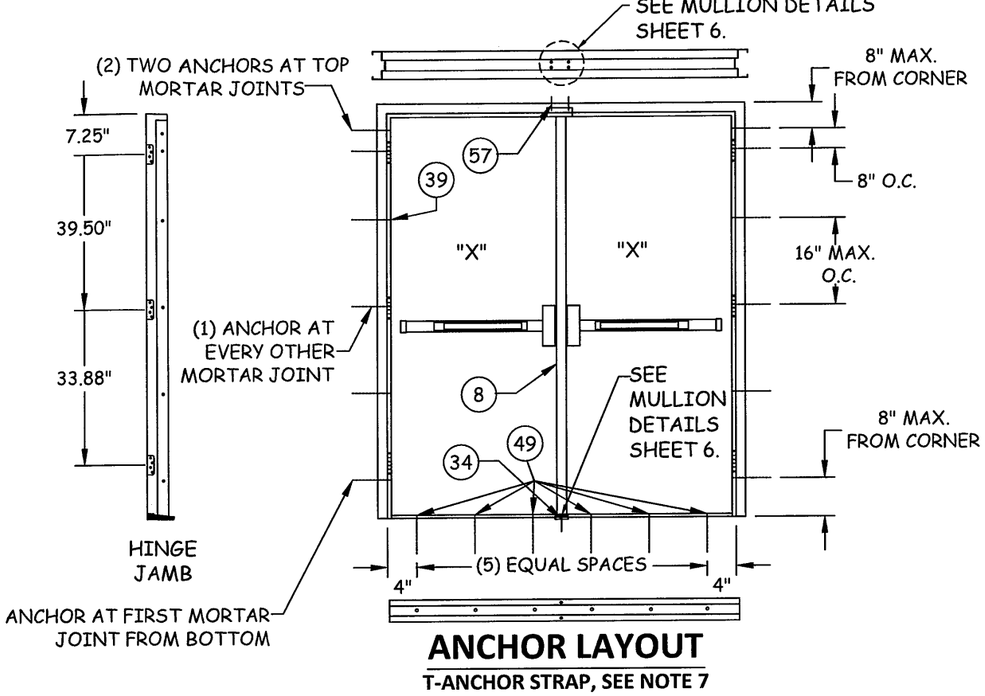

ANCHOR LAYOUT

T-ANCHOR STRAP, SEE NOTE 7

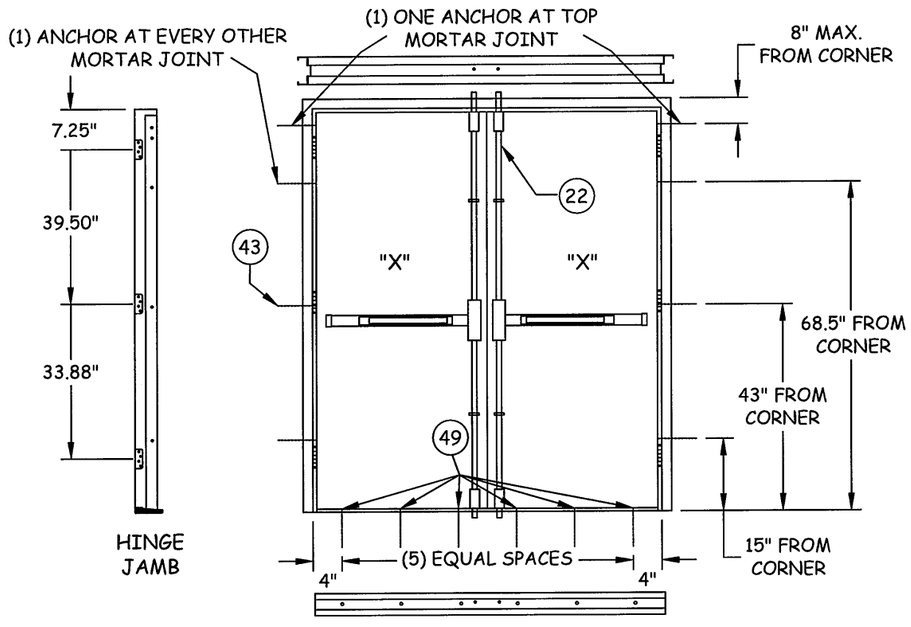

ANCHOR LAYOUT

ADJUSTABLE STRAP ANCHORS, SEE NOTE 6

INSTALLATION NOTES (CONTINUED):

5. INSTALLATION INTO GROUT FILLED CMU BLOCK SUBSTRATES WHICH UTILIZE HMF EXPRESS WIRE ANCHORS (ITEM #40) SHALL MAINTAIN THE FOLLOWING:
   5.1. MINIMUM EMBEDMENT OF 7 1/2"
   5.2. MINIMUM EDGE DISTANCE OF 1 5/16"
6. INSTALLATION INTO GROUT FILLED CMU BLOCK SUBSTRATES WHICH UTILIZE HMF EXPRESS ADJUSTABLE STRAP ANCHORS (ITEM #43) SHALL MAINTAIN THE FOLLOWING:
   6.1. MINIMUM EMBEDMENT OF 2"
   6.2. MINIMUM EDGE DISTANCE OF 2 1/2"
7. INSTALLATION INTO GROUT FILLED CMU BLOCK SUBSTRATES WHICH UTILIZE HMF EXPRESS TEE ANCHOR STRAPS (ITEM #39) SHALL MAINTAIN THE FOLLOWING:
   7.1. MINIMUM EMBEDMENT OF 2"
   7.2. MINIMUM EDGE DISTANCE OF 2 1/2"
8. ALL ANCHORS; WELDED EMA (ITEM #41), WELDED EMA BUTTERFLY (ITEM #42), TEE STRAP ANCHOR (ITEM #39), WIRE ANCHOR (ITEM #40), AND ADJUSTABLE STRAP ANCHORS (ITEM #43) SHALL BE SUPPLIED BY HMF EXPRESS, LLC.

PRODUCT REVISED
as complying with the Florida Building Code
Acceptance No. 12-0410.13
Expiration Date 8/26/14
By Ishaq I. Chanda
Miami Dade Product Control

HMF EXPRESS
2501 NORTHCHASE PKWY SE
WILMINGTON, NC 28405
PH: (866) 452-1845 FX: (910) 452-1848

TITLE: OS FLUSH STEEL DOOR ANCHOR LAYOUTS & NOTES (II)

PREPARED BY:
BUILDING DROPS, INC.
398 E. DANIA BEACH BLVD. #338
DANIA BEACH, FL 33004
PH: (954) 399-8478 FX: (954) 744-4738

REVISIONS

NO.	DESCRIPTION	BY	DATE
A	UPDATED NOTES 7. PER M-D COMMENT	JLR	10.02.09
B	UPDATED PER MD COMMENT	MS	01.13.10
C	UPDATED PER MD COMMENT	KSD	02.11.10
D	2010 FBC CODE UPDATES + OPTIONS	MS	02.24.12

11-30-2012
HERMES F. NORERO, P.E.
FLORIDA P. E. NO. 73778
BUILDING DROPS, INC.
398 E. DANIA BEACH BLVD. #338
DANIA BEACH, FL 33004
FBPE CERT. OF AUTHORIZATION NO. 29578

DATE: 06.09.09
DWN BY: GRN
CHK BY: HN
SCALE: NTS
DWG #: HMF001
SHEET: 4 OF 15

s:\projects\hmf express\md-p-12-0215 (18 ga. flush 7'2 outswing opaque steel commercial door)\dwgs\hmf001-opaque flush steel commercial 2/03/2012

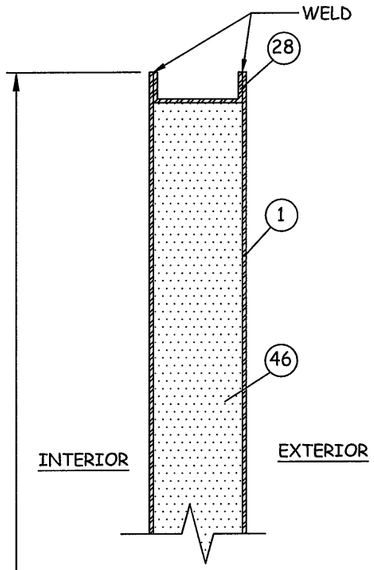

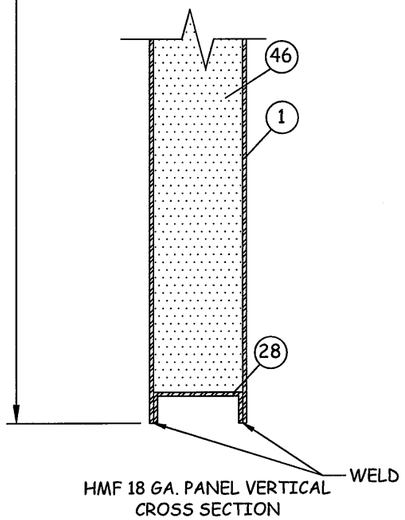

HMF 18 GA. PANEL VERTICAL
CROSS SECTION

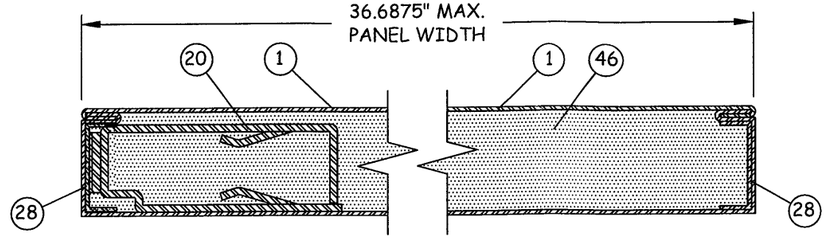

HMF 18 GA. PANEL HORIZONTAL CROSS SECTION
(FOR ILLUSTRATION ONLY)

18 GA. DOOR PANEL CONSTRUCTION NOTE:

THE HMF 18 GA. PANELS ARE CONSTRUCTED FROM (2) 18 GA. (0.048" MIN.) COLD ROLLED OR A60 GALVANNEALED STEEL FACE SHEETS, ITEM #2. THE VERTICAL EDGES OF THE FACE SHEETS HAVE ROLL FORMED EDGES AND ARE PLACED TOGETHER AT PANEL CONSTRUCTION TO FORM A MECHANICAL INTERLOCK. THE VERTICAL EDGES AT THE HINGE AND LOCK STILES ARE REINFORCED WITH THE 14 GA. (0.074") "U" CHANNEL WITH OPEN END FACING INWARD. EACH FACE SHEET IS SPOT WELDED TO THE VERTICAL CHANNELS 0.430" IN FROM THE EDGE AND 2" FROM THE BOTTOM AND 4" MAX. O.C. THEREAFTER. THE HORIZONTAL EDGES ARE CUT STRAIGHT AND ARE CLOSED WITH A 14 GA.(0.074") STEEL TOP & BOTTOM "U" CHANNEL CLOSER, ITEM #28. THE TOP AND BOTTOM "U" CHANNELS ARE PLACED IN THE PANEL WITH OPEN EDGE FACING OUTWARD.THE "U" CHANNEL IS 0.125" BELOW THE HORIZONTAL EDGES OF THE PANEL AND IS SPOT/PROJECTION WELDED IN (5) PLACES ON EACH SIDE OF THE PANEL. THE INTERIOR CAVITY OF EACH PANEL IS FILLED WITH EXPANDED POLYSTYRENE (EPS)1.0lbs. DENSITY, ITEM #46. THERE ARE THREE HINGE REINFORCEMENTS, ITEM #18, WELDED TO THE FACE SHEETS BEFORE BOTH FACE SHEETS ARE ASSEMBLED. THE REINFORCEMENT IS CONSTRUCTED FROM 7 GA. (0.179") HOT ROLLED STEEL MEASURING 1.25" X 8.5". THE REINFORCEMENTS ARE LOCATED AT 7.125", 39.375" AND 71.625" FROM TOP OF THE DOOR TO THE CENTER OF THE REINFORCEMENTS.

*NOTE: HINGE LOCATIONS VARY WITH HEIGHT OF DOOR WITH MAX. 39.5" O.C. SPACING.

16 GA. DOOR PANEL CONSTRUCTION NOTE:

THE HMF 22 GA. STEEL STIFFENED PANELS, ARE CONSTRUCTED FROM (2) 16 GA. (0.053" MIN.) COLD ROLLED STEEL FACE SHEETS ITEM #2. THE VERTICAL EDGES OF THE FACE SHEETS ARE BENT 90° x 0.860" IN TOWARD THE CENTER. THE HORIZONTAL EDGES ARE CUT STRAIGHT. THE OUTSIDE PERIMETER OF THE PANEL, ON THE INTERIOR, IS REINFORCED WITH A 14 GA. (0.074" MIN.) STEEL "U" CHANNEL ITEM #28. THE "U" CHANNEL IS PLACED IN THE PANEL ON THE HINGE AND LOCK STILES WITH THE OPEN END FACING INWARD AGAINST THE 90° x 0.860" BEND IN THE FACE SHEETS. EACH FACE SHEET IS SPOT WELDED TO THE "U" CHANNEL 0.430" IN FROM THE EDGE AND 2.0" UP FROM THE BOTTOM AND 4.0" MAXIMUM OF CENTER. THE TOP AND BOTTOM "U" CHANNELS ARE PLACED IN THE PANEL WITH THE OPEN EDGE FACING OUTWARD. THE "U" CHANNEL IS 0.125" BELOW THE HORIZONTAL EDGES OF THE PANEL AND IS SPOT/PROJECTION WELDED IN (5) PLACES ON EACH SIDE OF THE PANEL. THE PANEL IS REINFORCED ON THE INTERIOR WITH (3) 22 GA. (0.025" MIN.) STEEL STIFFENERS, ITEM #48, RUNNING VERTICAL FROM TOP TO BOTTOM. THE TWO OUTBOARD STIFFENERS ARE LOCATED 6.5" MAXIMUM IN FROM THE EDGE OF THE PANEL. THE MIDDLE STIFFENER IS LOCATED IN THE CENTER OF THE PANEL. THE THREE STIFFENERS CAN ONLY BE A MAXIMUM 6.0" APART. THE STIFFENERS ARE WELDED AT EACH SIDE OF THE STIFFENER UP 3.0" FROM THE BOTTOM AND A MAXIMUM OF 6.0" ON CENTER. THE SPACES BETWEEN THE THREE STIFFENERS AND THE EDGES OF THE PANEL ARE FILLED WITH FIBERGLASS INSULATION, ITEM #47. EACH PANEL HAS THREE STEEL HINGE REINFORCEMENTS, ITEM #18, WELDED TO ONE OF THE FACE SHEETS BEFORE BOTH FACE SHEETS ARE ASSEMBLED. THE REINFORCEMENT IS CONSTRUCTED FROM A 7 GA. (0.171" MIN.) HOT ROLLED STEEL.THE REINFORCEMENTS ARE LOCATED 7.125", 39.375" AND 71.625" FROM THE TOP OF THE DOOR TO THE CENTER OF THE REINFORCEMENTS.

*HINGE LOCATIONS VARY WITH HEIGHT OF DOOR WITH MAX. 39.5" O.C. SPACING.

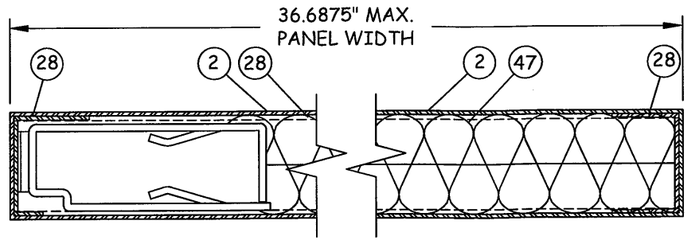

HMF 16 GA. PANEL HORIZONTAL CROSS SECTION
(FOR ILLUSTRATION ONLY)

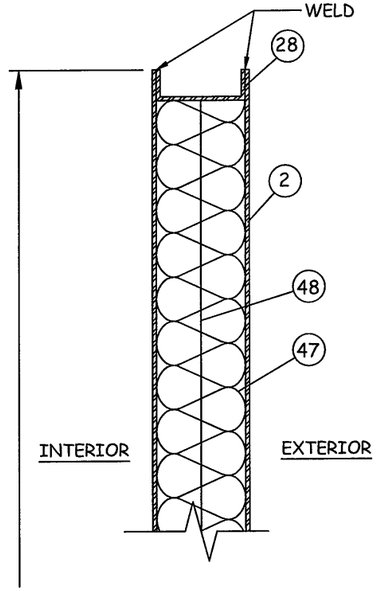

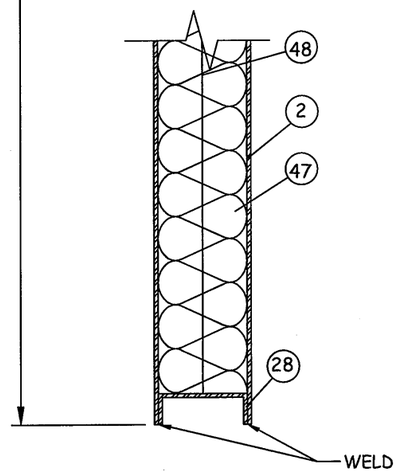

HMF 16 GA. PANEL VERTICAL
CROSS SECTION

HMF EXPRESS
2501 NORTHCHASE PKWY SE
WILMINGTON, NC 28405
PH: (866) 452-1845 FX: (910) 452-1848

TITLE:
OS FLUSH STEEL DOOR
18 GA. & 16 GA. DOOR PANEL
CONSTRUCTION

PREPARED BY:
BUILDING DROPS, INC.
398 E. DANIA BEACH BLVD. #338
DANIA BEACH, FL 33004
PH: (954) 399-8478 FX: (954) 744-4738

REVISIONS

NO.	DESCRIPTION	BY	DATE
A	UPDATED 18 GA. NOTES	JLR	10.02.09
D	2010 FBC CODE UPDATES + OPTIONS	MS	02.24.12

11-20-2012
HERMES F. NORERO, P.E.
FLORIDA P. E. NO. 73778
BUILDING DROPS, INC.
398 E. DANIA BEACH BLVD. #338
DANIA BEACH, FL 33004
FBPE CERT. OF AUTHORIZATION NO. 29578

PRODUCT REVIEWED
as complying with the Florida
Building Code
Acceptance No. 12-0410.13
Expiration Date 8/26/17
By Ishwar J. Chanda
Miami Dade Product Control

DATE: 06.09.09
DWN BY: GRN
CHK BY: HN
SCALE: NTS

DWG #:
HMF001

SHEET: 5 OF 15

s:\projects\hmf expressimd-p-12-0215 (18 ga. flush 72 outswing opaque steel commercial door)\dwgs\hmf001-opaque flush steel.dwg, 11/20/2012 3:07:59 PM

FRAME CONSTRUCTION NOTE:

- K.D. AND WELDED FRAME - THE HEADER, ITEM #3 AND THE SIDE JAMBS, ITEM #4 ARE A ONE-PIECE BRAKE PRESS FORMED STEEL FRAME FROM MIN. 16 GA. (0.053" MIN.) OR GREATER COLD ROLLED STEEL. THE CORNERS OF BOTH THE HEADER AND SIDE JAMBS ARE MITERED AND BUTTED. THE HEADER HAS SLOTS PUNCHED IN BOTH RETURN LEGS (SEE DETAIL B, SHEET 5) FOR THE 18 GA. (0.048" MIN.) FRAME TABS, ITEM #52 THAT ARE WELDED TO SIDE JAMBS. THE TABS ARE BENT 90° OVER THE HEADER AFTER BEING SLIPPED THROUGH THE SLOTS TO CREATE A MECHANICAL JOINT. THE HEADER ALSO HAS A PUNCHED SLOT IN THE HAT SECTION, SEE DETAIL B SHEET 5. THE SIDE JAMBS HAVE ONE FORMED TAB IN THE HAT SECTION, SEE DETAIL A SHEET 5. THE FORMED TABS ON THE SIDE JAMBS ARE SLID INTO THE PUNCHED SLOTS IN THE HEADER AND BENT OVER 90° TO CREATE A MECHANICAL LOCK. WELDED FRAME ONLY AT THE HEADER AND SIDE JAMBS ARE ASSEMBLED. THEY ARE SEEM WELDED ON THE FRAME FACE AND CONTINUOUS WELDED ON THE INTERIOR FACES.
- EACH HINGE LOCATION ON BOTH THE WELDED FRAME AND THE K.D. FRAME HAVE A 7 GA. (0.179") HOT ROLLED STEEL HINGE REINFORCEMENT, ITEM #19, WELDED TO THE FRAME. EACH SIDE JAMB HAS A 16 GA. (0.053") STEEL L-SHAPED FLOOR ANCHOR PLATE WELDED TO THE INSIDE BOTTOM OF THE FRAME. THE SYSTEM CAN BE FITTED WITH AN EXTRUDED ALUMINUM OUT-SWING ADA BUMP FACE THRESHOLD MANUFACTURED BY NATIONAL GUARD PRODUCTS #896N, ITEM #5, OR AN EXTRUDED ALUMINUM ADA PASS OVER THRESHOLD #415S BY HAGAR, ITEM #7. THE FRAME SYSTEM CAN UTILIZE A SOLID STEEL REMOVABLE MULLION BY DORMA #F1300, ITEM #8, COLD ROLLED STEEL. THE MULLION IS HELD INTO THE FRAME WITH A SOLID STEEL TOP AND BOTTOM MULLION FITTING. THE FITTING AT THE TOP IS SECURED TO THE FRAME HEADER WITH (4) 5/16" X 1/2" FHPMS, ITEM #57. THE FITTING AT THE BOTTOM IS SECURED TO THE CONCRETE FLOOR WITH (2) 3/8" X 1-3/8" DROP-IN ANCHORS INTO CONCRETE SILL, ITEM # 34.

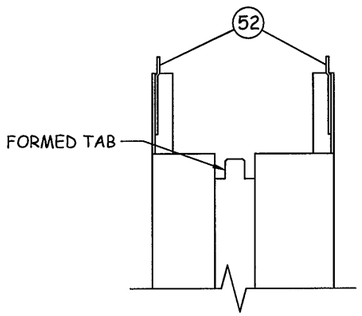

DETAIL A
JAMB DETAIL W/ FORMED & WELDED TABS

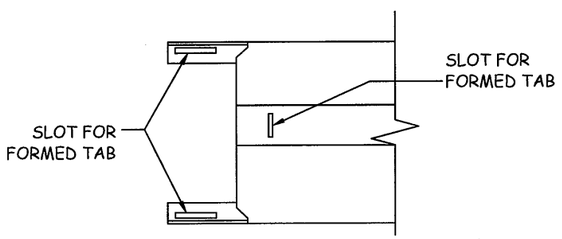

DETAIL B
HEADER DETAIL W/ PUNCHED SLOTS FOR JAMB TABS

NOTE:
IF DOOR STOP IS LESS THAN 3" WIDE, BLOCKING MUST BE SUPPLIED BY OTHERS

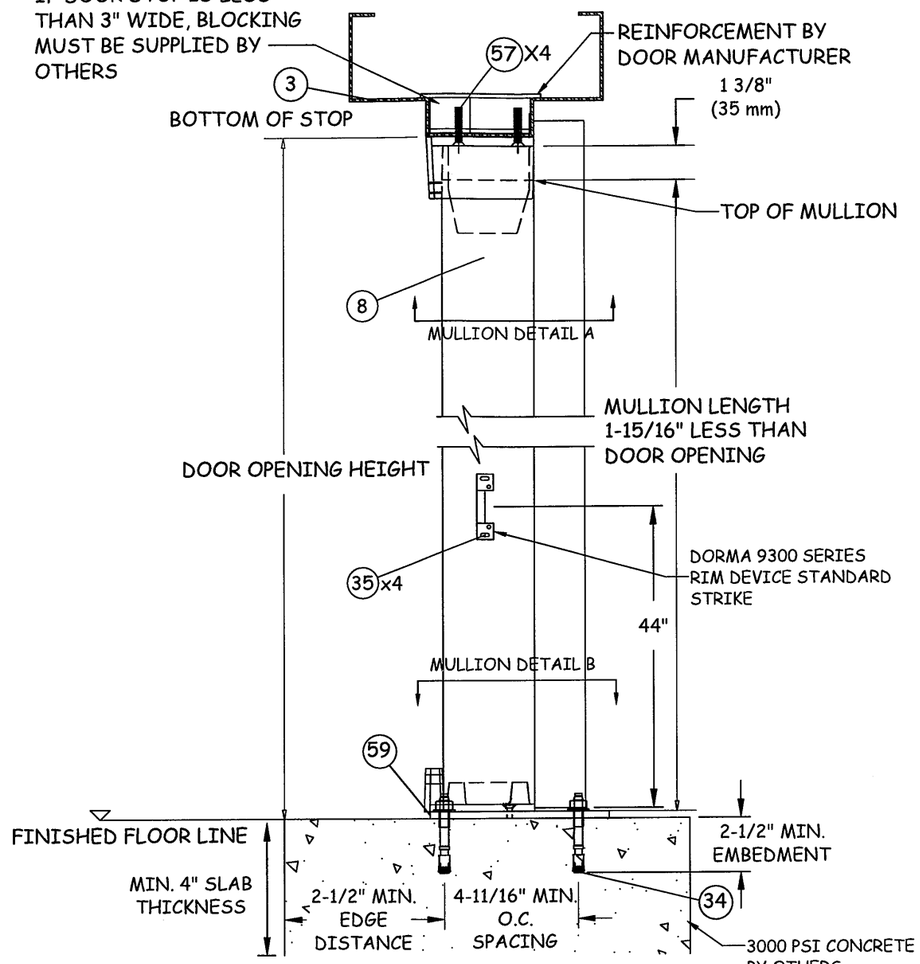

MULLION DETAIL
DORMA HC1300 REMOVABLE MULLION
VERTICAL SECTION

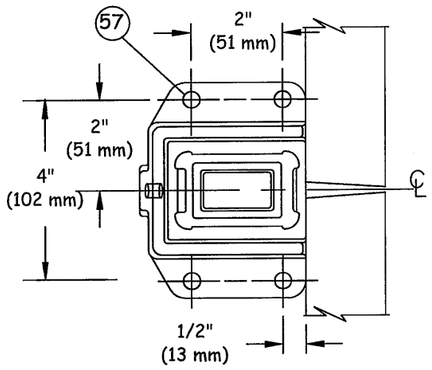

MULLION DETAIL A
TOP FITTING

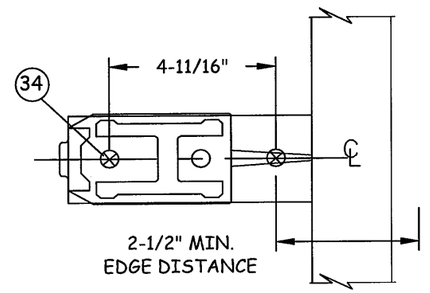

MULLION DETAIL B
BOTTOM FITTING

(8) DORMA HC1300 FIRE MULLION
STEEL
TYPICAL WALL THICKNESS: 0.3125"

DORMA HC1300 MULLION
ASTM A500 GR. B
MIN. Fy = 46 KSI
E = 29,000 KSI
Ix = 2.3800 in.4
Sx = 1.5900 in.3

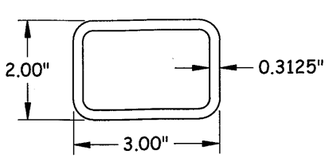

HMF EXPRESS
2501 NORTHCHASE PKWY SE
WILMINGTON, NC 28405
PH: (866) 452-1845 FX: (910) 452-1848

TITLE: OS FLUSH STEEL DOOR FRAME NOTES AND MULLION DETAILS

PREPARED BY:
BUILDING DROPS, INC.
398 E. DANIA BEACH BLVD. #338
DANIA BEACH, FL 33004
PH: (954) 399-8478 FX: (954) 744-4738

REVISIONS

NO.	DESCRIPTION	BY	DATE
B	UPDATED PER MD COMMENT	JLA	01.14.10
C	UPDATED PER MD COMMENT	KSD	02.11.10
D	2010 FBC CODE UPDATES + OPTIONS	MS	02.24.12

HERMES F. NORERO, P.E.
FLORIDA P. E. NO. 73778
BUILDING DROPS, INC.
398 E. DANIA BEACH BLVD. #338
DANIA BEACH, FL 33004
FBPE CERT. OF AUTHORIZATION NO. 29578

PRODUCT REVISED as complying with the Florida Building Code
Acceptance No. 12-0410.13
Expiration Date 8/26/17
By Ishaq J. Chanda
Miami Dade Product Control

DATE: 06.09.09
DWN BY: GRN
CHK BY: HN
SCALE: NTS

DWG #: HMF001
SHEET: 6 OF 15

s:\projects\hmf express\md-p-12-0215 (18 ga. flush 72 outswing opaque steel commercial door)\dwgs\hmf001-opaque flush steel commercial door.dwg 2/20/2012 3:39:39 PM

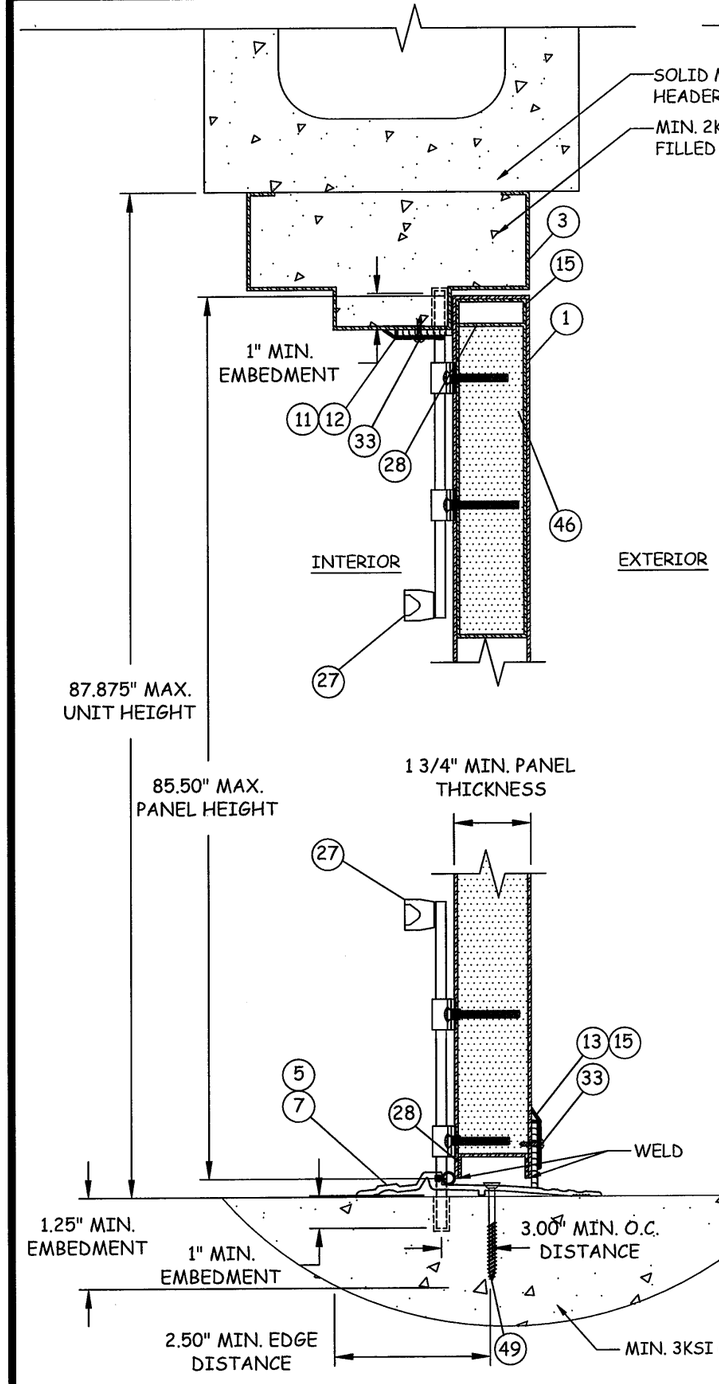

18 GA. PANEL

A/7 VERTICAL SECTION

HEAD/SILL - CONCRETE/GROUT-FILLED CMU
(MORTISE LOCK/
CYLINDRICAL LOCK WITH SURFACE BOLTS)

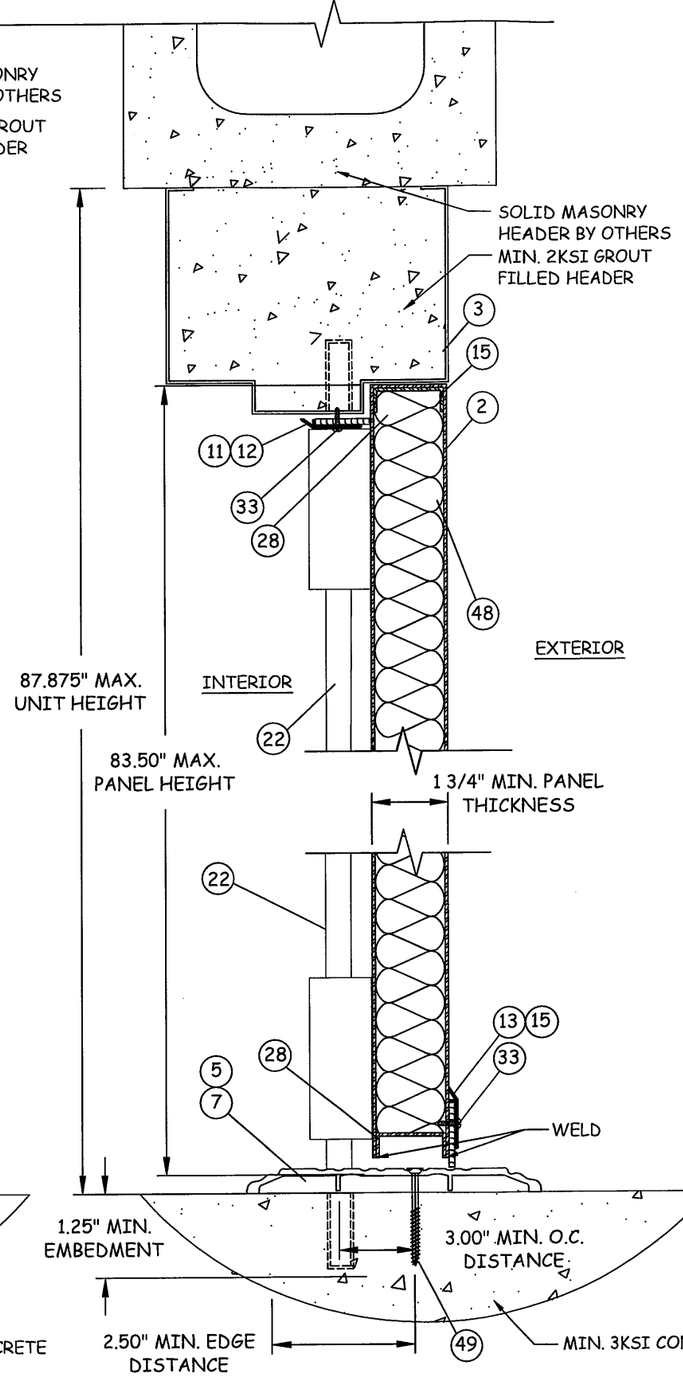

16 GA. PANEL

B/7 VERTICAL SECTION

HEAD/SILL - CONCRETE/GROUT-FILLED CMU
(SURFACE VERTICAL ROD)

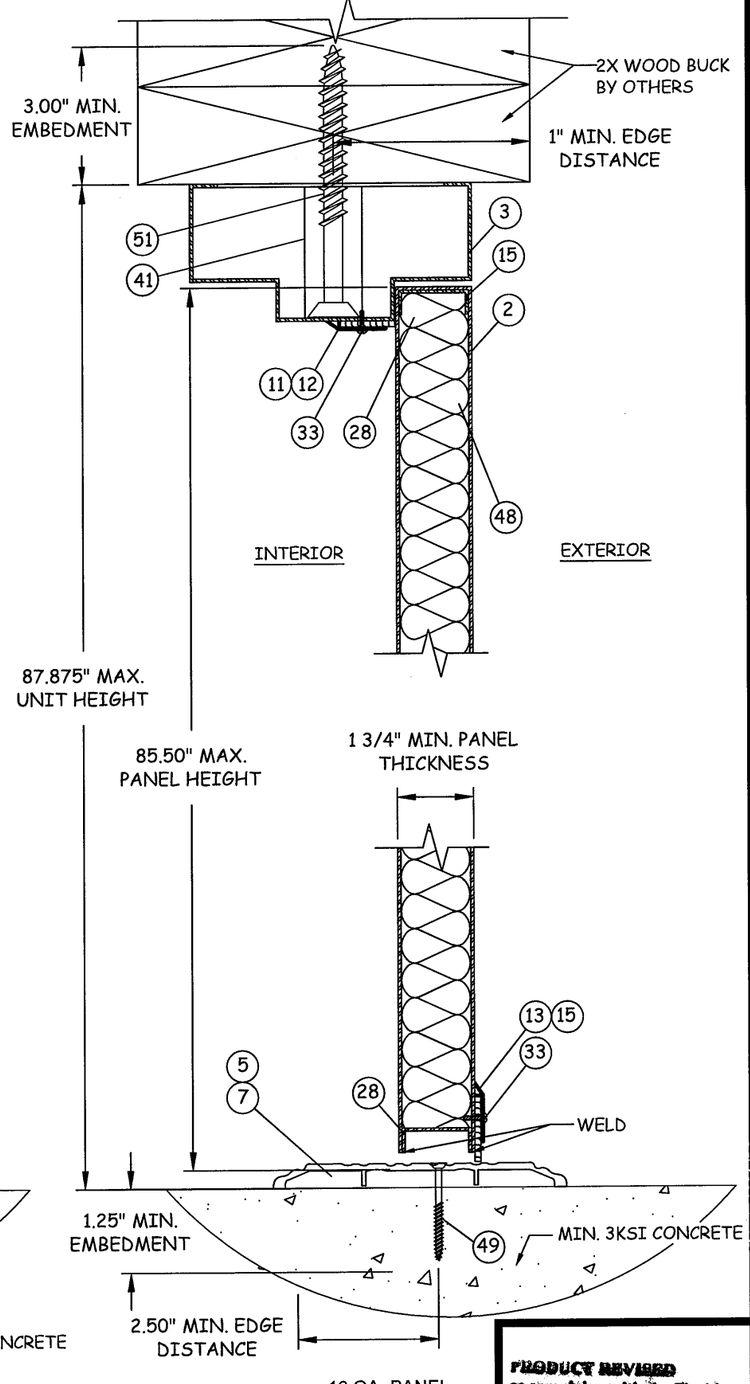

16 GA. PANEL

C/7 VERTICAL SECTION

HEAD - 2X WOOD FRAME
SILL - CONCRETE
(REMOVABLE MULLION)

PRODUCT REVISED
as complying with the Florida Building Code
Acceptance No. 12-0410.13
Expiration Date 8/26/14
By Ishaq I. Chanda
Miami Dade Product Control

HMF EXPRESS
2501 NORTHCHASE PKWY SE
WILMINGTON, NC 28405
PH: (866) 452-1845 FX: (910) 452-1848

TITLE: OS FLUSH STEEL DOOR
VERTICAL SECTIONS

PREPARED BY:
BUILDING DROPS, INC.
398 E. DANIA BEACH BLVD. #338
DANIA BEACH, FL 33004
PH: (954) 399-8478 FX: (954) 744-4738

REVISIONS

NO.	DESCRIPTION	BY	DATE
A	UPDATED PER MIAMI-DADE COMMENT	JLR	10.02.09
B	UPDATED PER MD COMMENT	MS	01.13.10
C	UPDATED PER MD COMMENT	KSD	02.11.10
D	2010 FBC CODE UPDATES + OPTIONS	MS	02.24.12

11-20-2012
HERMES F. NOVERO, P.E.
FLORIDA LICENSE #57795
BUILDING DROPS, INC.
398 E. DANIA BEACH BLVD. #338
DANIA BEACH, FL 33004
FBPE CERT. OF AUTHORIZATION NO. 29578

DATE: 06.09.09
DWN BY: GRN
CHK BY: HN
SCALE: NTS

DWG #: HMF001

SHEET: 7 OF 15

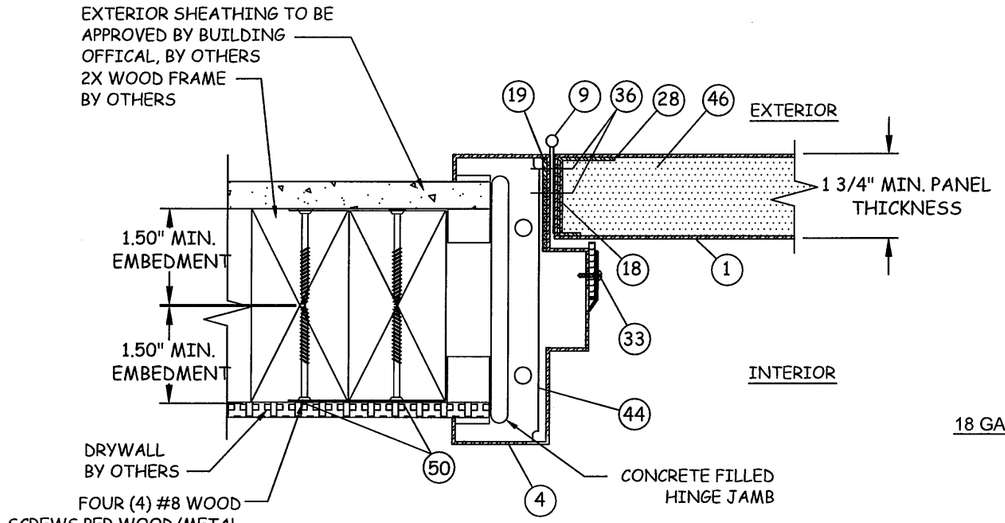

NOTE: STUD WALL SHALL BE DESIGNED TO CARRY 127 LBS/FT LOAD AND SHALL BE REVIEWED BY BUILDING OFFICIAL.

F/8 HORIZONTAL SECTION
JAMB - WOOD FRAME
WOOD/METAL STUD ANCHOR

18 GA. PANELS

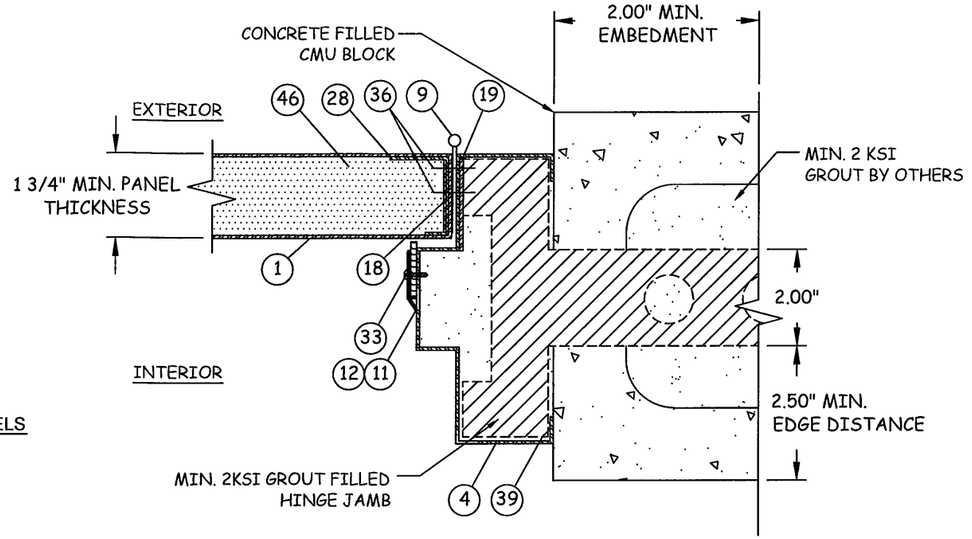

G/8 HORIZONTAL SECTION
JAMB - CONCRETE/MASONRY
TEE ACNCHOR

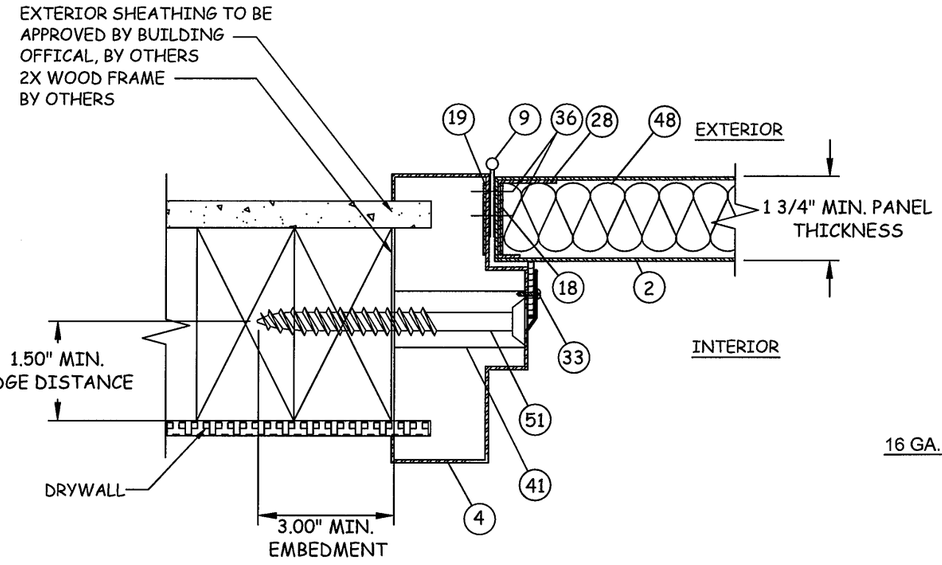

D/8 HORIZONTAL SECTION
JAMB - WOOD FRAME
LAG SCREW/EMA WELDED ANCHOR

16 GA. PANELS

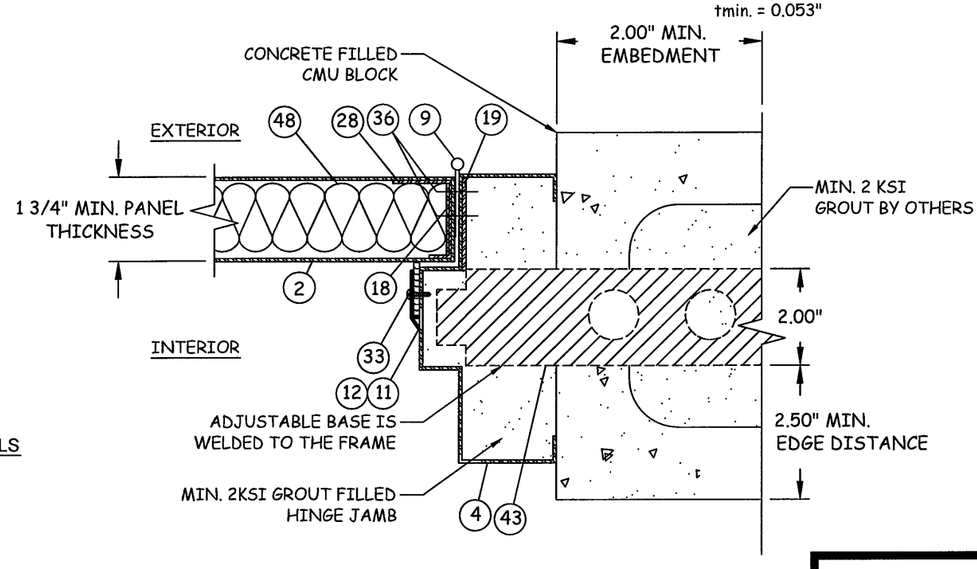

E/8 HORIZONTAL SECTION
JAMB - CONCRETE/MASONRY
ADJUSTABLE STRAP

PRODUCT REVISED
to comply with the Florida Building Code
Application No. 12-0410.13
Expiration Date: 8/26/14
By: Shaq Chen
Miami-Dade Product Control

HMF EXPRESS
2501 NORTHCHASE PKWY SE
WILMINGTON, NC 28405
PH: (866) 452-1845 FX: (910) 452-1848

TITLE: OS FLUSH STEEL DOOR HORIZONTAL SECTIONS (I)

PREPARED BY:
BUILDING DROPS, INC.
398 E. DANIA BEACH BLVD. #338
DANIA BEACH, FL 33004
PH: (954) 399-8478 FX: (954) 744-4738

REVISIONS

NO.	DESCRIPTION	BY	DATE
A	UPDATED PER MIAMI-DADE COMMENT	JLR	10.02.09
B	UPDATED PER MD COMMENT	MS	01.13.10
D	2010 FBC CODE UPDATES + OPTIONS	MS	02.24.12

1-29-2012
HERMES F. NORERO, P.E.
FLORIDA P. E. NO. 73778
BUILDING DROPS, INC.
398 E. DANIA BEACH BLVD. #338
DANIA BEACH, FL 33004
FBPE CERT. OF AUTHORIZATION NO. 29578

DATE: 06.09.09
DWN BY: GRN
CHK BY: HN
SCALE:

DWG #: HMF001

SHEET: 8 OF 15

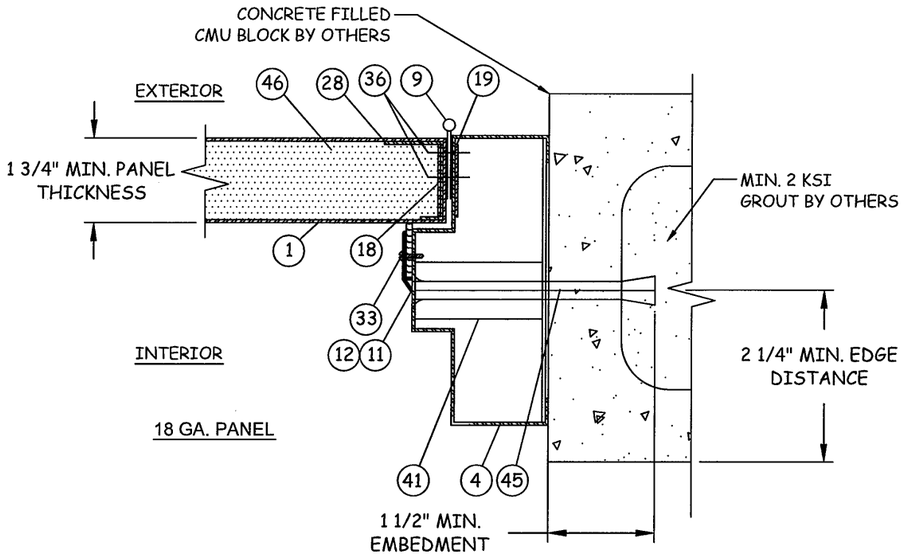

J/9 HORIZONTAL SECTION

JAMB - CONCRETE/MASONRY
LOK-BOLT/ EMA. WELDED ANCHOR

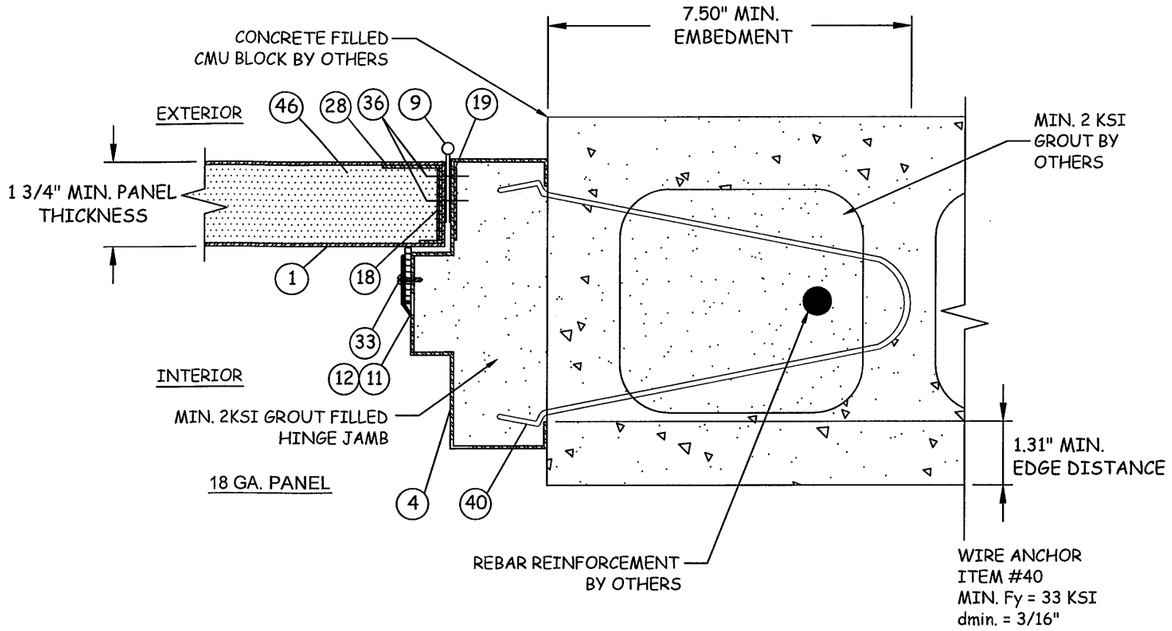

K/9 HORIZONTAL SECTION

JAMB - CONCRETE/MASONRY
WIRE ACNCHOR/HMF 18GA PANEL

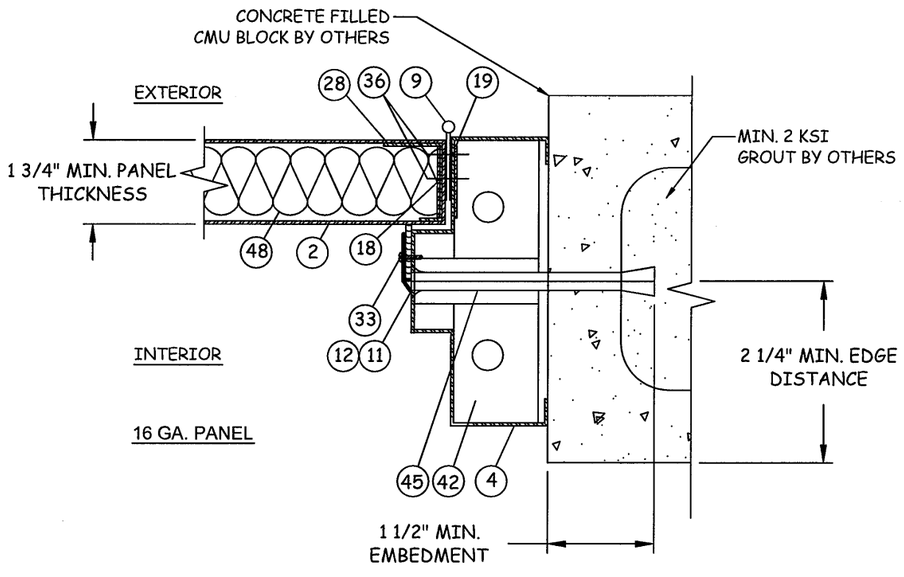

H/9 HORIZONTAL SECTION

JAMB - CONCRETE/MASONRY
LOK-BOLT/ EMA BUTTERFLY ANCHOR

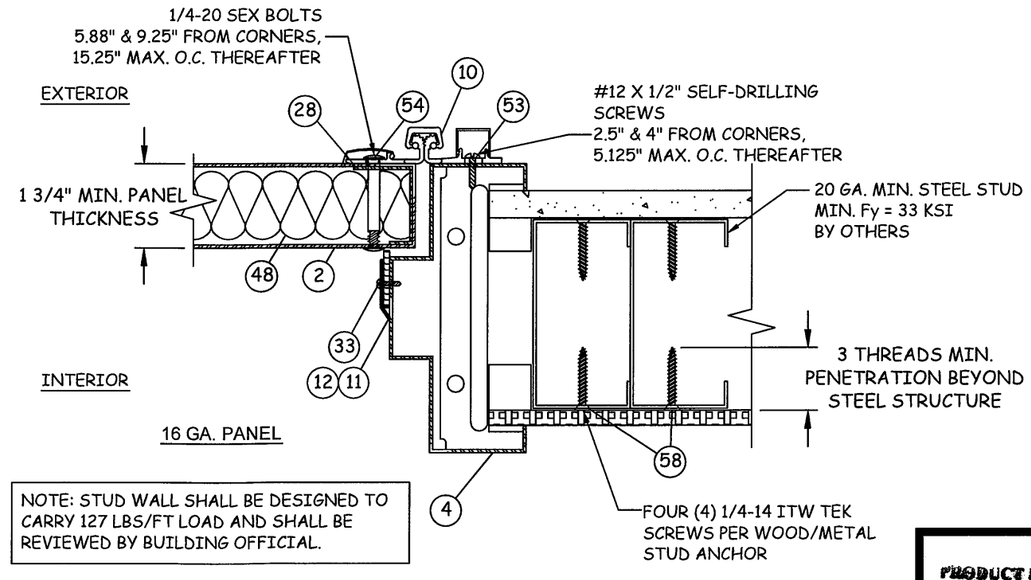

NOTE: STUD WALL SHALL BE DESIGNED TO CARRY 127 LBS/FT LOAD AND SHALL BE REVIEWED BY BUILDING OFFICIAL.

I/9 HORIZONTAL SECTION

JAMB - CONTINUOUS HINGE

HMF EXPRESS
2501 NORTHCHASE PKWY SE
WILMINGTON, NC 28405
PH: (866) 452-1845 FX: (910) 452-1848

TITLE: OS FLUSH STEEL DOOR
HORIZONTAL SECTIONS (II)

PREPARED BY:
BUILDING DROPS, INC.
398 E. DANIA BEACH BLVD. #338
DANIA BEACH, FL 33004
PH: (954) 399-8478 FX: (954) 744-4738

REVISIONS

NO.	DESCRIPTION	BY	DATE
A	UPDATED K/8 PER M-D COMMENT	JLR	10.02.09
B	UPDATED PER MD COMMENT	MS	01.13.10
C	UPDATED PER MD COMMENT	KSD	02.11.10
D	2010 FBC CODE UPDATES + OPTIONS	MS	02.24.12

11-20-2012
HERMES F. NORERO, P.E.
FLORIDA P.E. NO. 73773
BUILDING DROPS, INC.
398 E. DANIA BEACH BLVD. #338
DANIA BEACH, FL 33004
FBPE CERT. OF AUTHORIZATION NO. 29578

PRODUCT REVISED
as complying with the Florida Building Code
Acceptance No. 12-0410.13
Expiration Date 8/26/17
By Isaac J. Chavez
Miami Dade Product Control

DATE: 06.09.09
DWN BY: GRN
CHK BY: HN
SCALE: NTS

DWG #: HMF001

SHEET: 9 OF 15

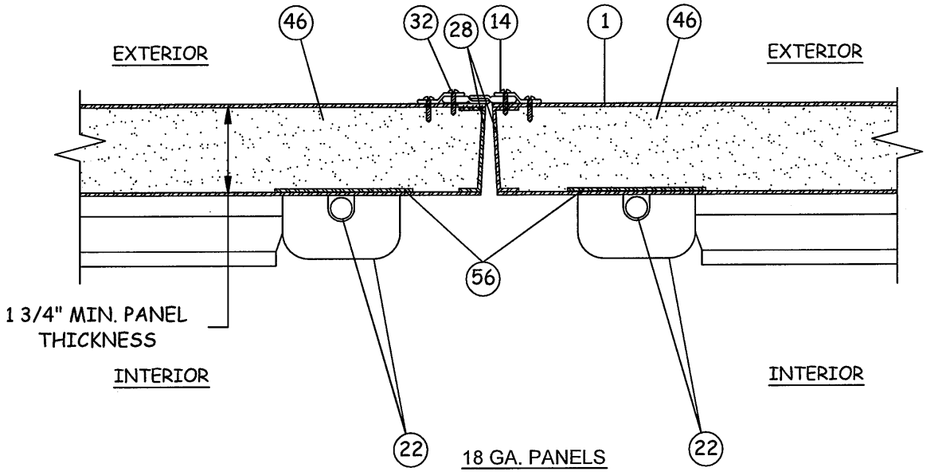

N/10 HORIZONTAL SECTION

DORMA 9400 VERTICAL RODS*

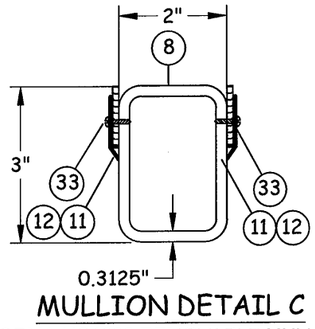

MULLION DETAIL C

DORMA HC1300 REMOVABLE MULLION
(SEE MULLION TOP & BOTTOM
INSTALLATION DETAILS, SHEET 5)

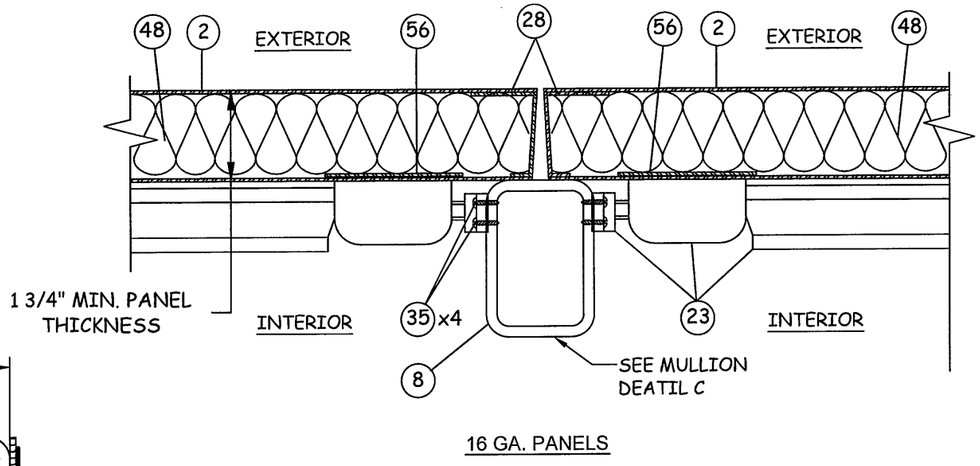

O/10 HORIZONTAL SECTION

DORMA 9300 RIM DEVICE W/ PUSH BAR*

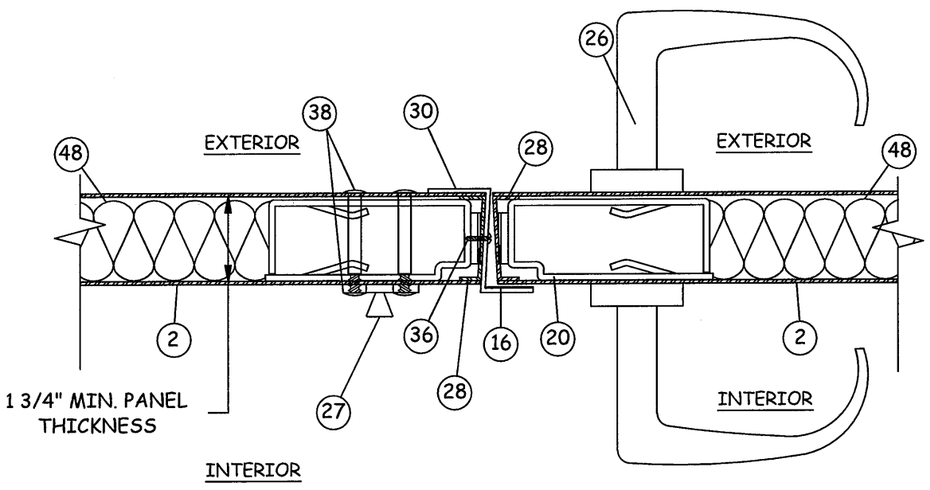

L/10 HORIZONTAL SECTION

CORBIN/RUSSWIN ML2000*
MORTISE LOCKSET

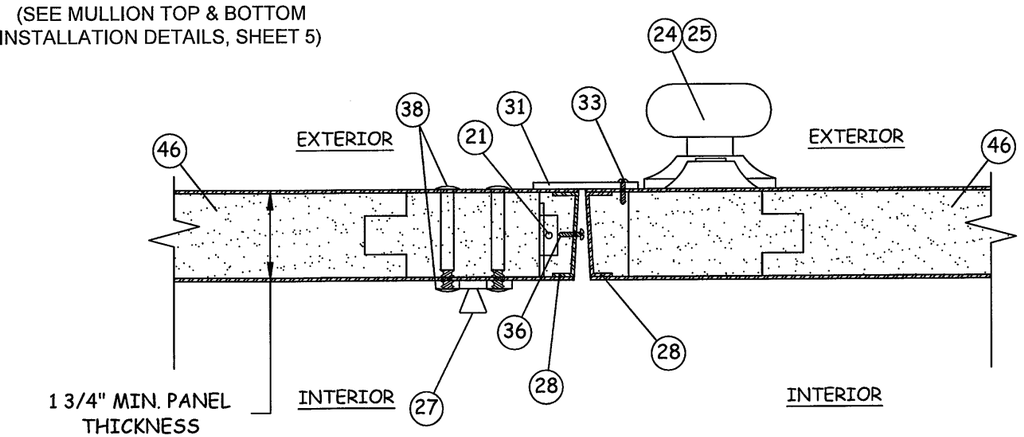

M/10 HORIZONTAL SECTION

CORBIN/RUSSWIN CORB 26D
CYLINDRCAL LOCKSET W/ CYL. DEADLOCK

PRODUCT REVISED
in complying with the Florida Building Code
Acceptance No. 12-0410.13
Expiration Date 8/26/14
By Ishaq I. Chanda
Miami Dade Product Control

HMF EXPRESS
2501 NORTHCHASE PKWY SE
WILMINGTON, NC 28405
PH: (866) 452-1845 FX: (910) 452-1848

TITLE:
OS FLUSH STEEL DOOR
HORIZONTAL SECTIONS (III)

PREPARED BY:
BUILDING DROPS, INC.
398 E. DANIA BEACH BLVD. #338
DANIA BEACH, FL 33004
PH: (954) 399-8478 FX: (954) 744-4738

REVISIONS

NO.	DESCRIPTION	BY	DATE
A	MULLION DETAIL & LOCKSET	M.S.	1/27/10
D	2010 FBC CODE UPDATES + OPTIONS	MS	02.24.12

11-20-2012
HERMES F. MORERO, P.E.
FLORIDA P. E. NO. 73778
BUILDING DROPS, INC.
398 E. DANIA BEACH BLVD. #338
DANIA BEACH, FL 33004
FBPE CERT. OF AUTHORIZATION NO. 29578

DATE: 06.09.09
DWN BY: GRN
CHK BY: HN
SCALE: NTS

DWG #: HMF001

SHEET: 10 OF 15

3 H.M.F. HEAD C.R.S.

MIN. 16 GA. STEEL
MIN. WALL THICKNESS: .053" OR GREATER

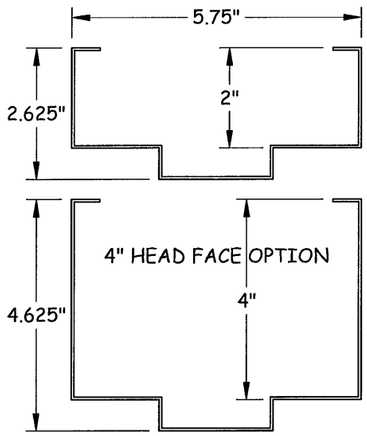

NOTE: WHEN 4" HEAD FACE OPTION IS USED, O.A. FRAME HEIGHT SHALL NOT EXCEED 87.875" AND DOOR PANEL HEIGHT SHALL NOT EXCEED 83.5".

4 H.M.F. JAMB C.R.S.

16 GA. STEEL MIN.
TYPICAL WALL THICKNESS: .053" OR GREATER

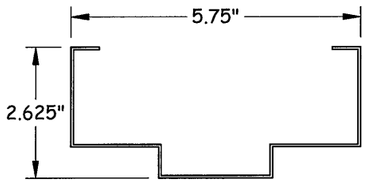

5 PANIC THRESHOLD NATIONAL GUARD #896N

ALUMINIUM
TYPICAL WALL THICKNESS: .125"

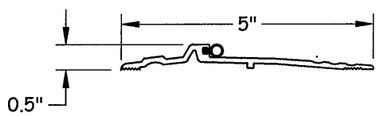

7 ADA PASS OVER THRESHOLD BY HAGER #415S

ALUMINIUM
TYPICAL WALL THICKNESS: .140"

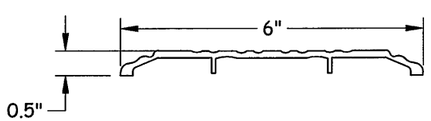

8 DORMA HC1300 FIRE MULLION

STEEL
TYPICAL WALL THICKNESS: 0.3125"

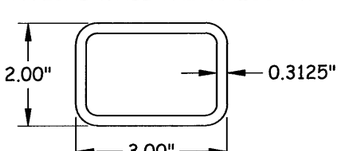

DORMA HC1300 MULLION
ASTM A500 GR. B
MIN. Fy = 46 KSI
E = 29,000 KSI
Ix = 2.3800 in.4
Sx = 1.5900 in.3

9 4 1/2" TEMPLATE HINGE BY HAGER

STEEL
TYPICAL WALL THICKNESS: .130"

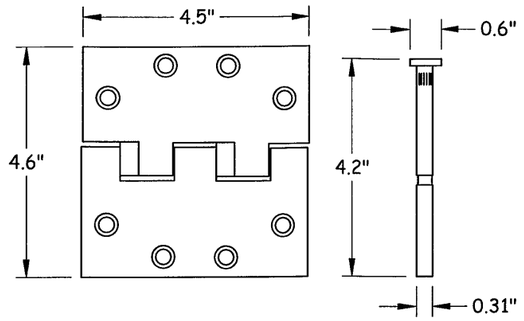

10 CONTINUOUS STEEL HINGE HAGER

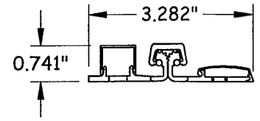

11 SURFACE MOUNTED FRAME WEATHERSTRIP

NATIONAL GUARD PRODUCTS #130NA

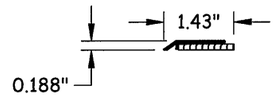

12 SURFACE MOUNTED FRAME WEATHERSTRIP

NATIONAL GUARD PRODUCTS #130NA

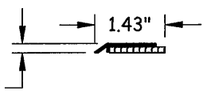

13 SURFACE MOUNTED DOOR BOTTOM SWEEP

NATIONAL GUARD PRODUCTS #200NA

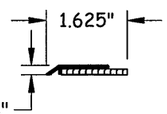

14 SURFACE MOUNTED DOOR MEETING STILE SEAL

NATIONAL GUARD PRODUCTS #125NA

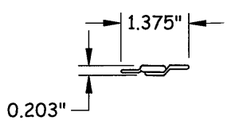

15 SURFACE MOUNTED DOOR BOTTOM SWEEP

PEMKO #321CN49

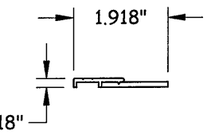

18 STEEL DOOR HINGE REINFORCEMENT

7 GA. STEEL
TYPICAL WALL THICKNESS: .179"

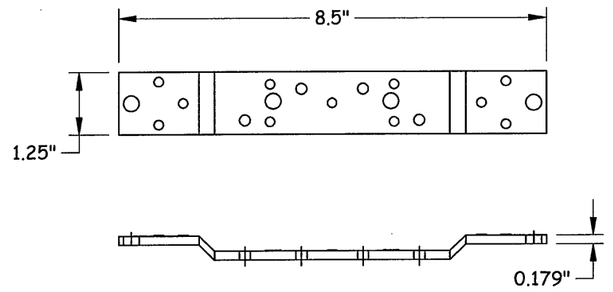

19 H.R.S. FRAME HINGE REINFORCEMENT

7 GA. STEEL
TYPICAL WALL THICKNESS: .179"

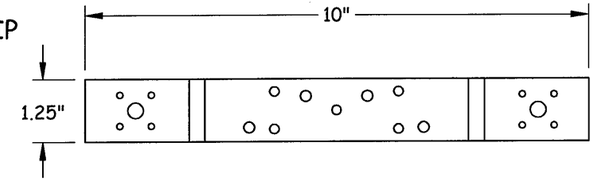

PRODUCT REVISED
as complying with the Florida Building Code
Acceptance No. 12-0410.13
Expiration Date 3/26/14
By Ishaq I. Hanna
Miami Dade Product Control

HMF EXPRESS
2501 NORTHCHASE PKWY SE
WILMINGTON, NC 28405
PH: (866) 452-1845 FX: (910) 452-1848

TITLE: OS FLUSH STEEL DOOR COMPONENTS (I)

PREPARED BY:
BUILDING DROPS, INC.
398 E. DANIA BEACH BLVD. #338
DANIA BEACH, FL 33004
PH: (954) 399-8478 FX: (954) 744-4738

REVISIONS

NO.	DESCRIPTION	BY	DATE
D	2010 FBC CODE UPDATES + OPTIONS	MS	02.24.12

11-28-2012
HERMES F. MORERO, P.E.
FLORIDA P.E. NO. 75778
BUILDING DROPS, INC.
398 E. DANIA BEACH BLVD. #338
DANIA BEACH, FL 33004
FBPE CERT. OF AUTHORIZATION NO. 29578

DATE: 06.09.09
DWN BY: GRN
CHK BY: HN
SCALE: NTS

DWG #: HMF001

SHEET: 11 OF 15

20 DAYTON MORTISE LOCK BOX

14 GA. STEEL
TYPICAL WALL THICKNESS: .075"

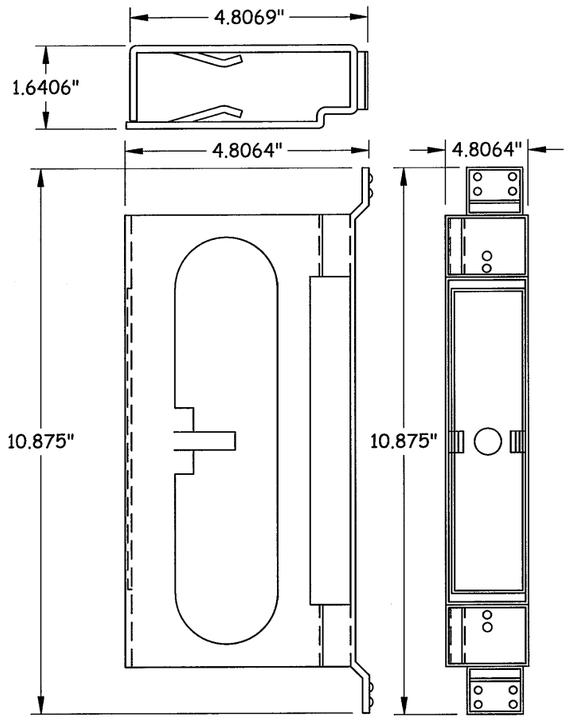

21 161 LOCK REINFORCEMENT

16 GA. STEEL
TYPICAL WALL THICKNESS: .0598"

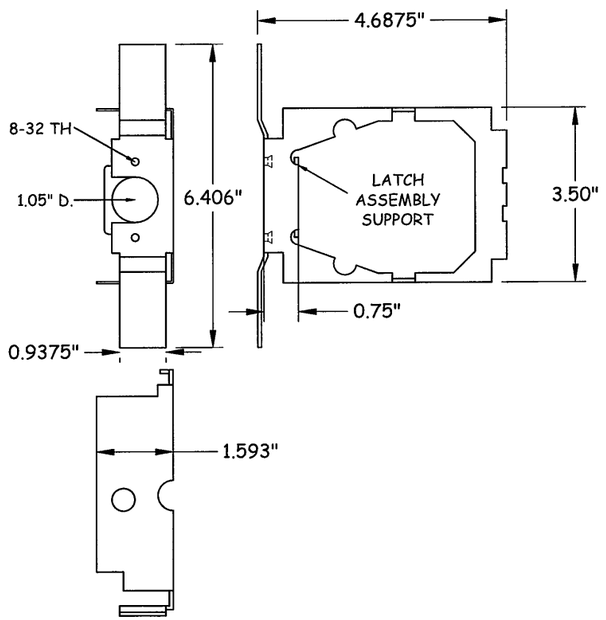

28 TOP, SIDE, & BOTTOM CHANNEL

14 GA. STEEL
TYPICAL WALL THICKNESS: .0747"

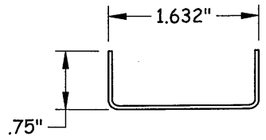

30 COMMERCIAL Z-ASTRAGAL

16 GA. STEEL
TYPICAL WALL THICKNESS: .062" MIN.

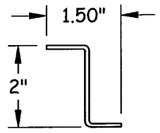

31 COMMERCIAL FLAT ASTRAGAL

12 GA. STEEL
TYPICAL WALL THICKNESS: .0.125"

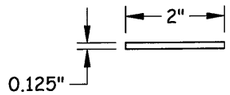

39 MASONARY "TEE" ANCHOR

16 GA. STEEL
TYPICAL WALL THICKNESS: .0.058" MIN.
SEE SHEET 8 FOR SPECIFICATIONS

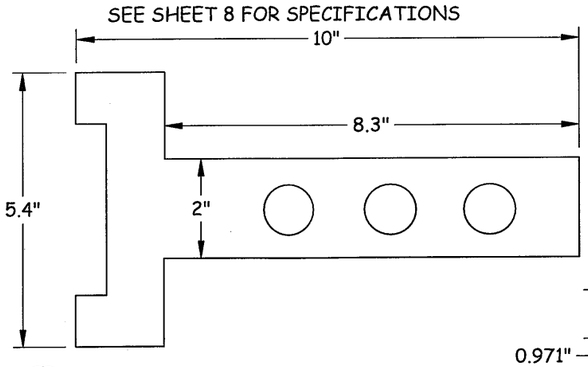

27 IVES SURFACE BOLT

STEEL

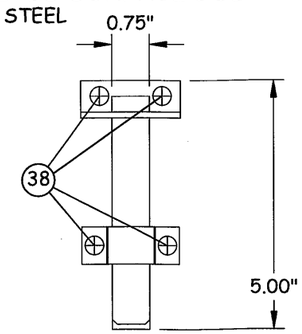

40 MASONRY WIRE ANCHOR

7 GA. STEEL (ASTM A653)
TYPICAL WALL THICKNESS: .0.185" DIA.
SEE SHEET 9 FOR SPECIFICATIONS

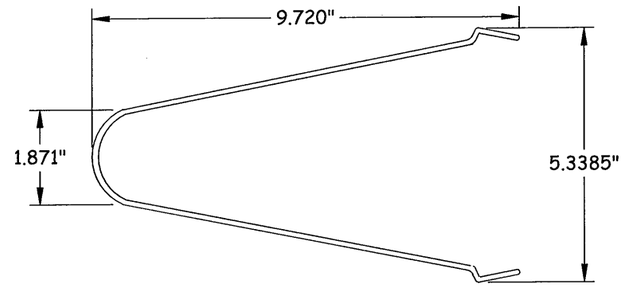

41 EMA WELDED ANCHOR

16 GA. STEEL
TYPICAL WALL THICKNESS: 0.058" MIN.

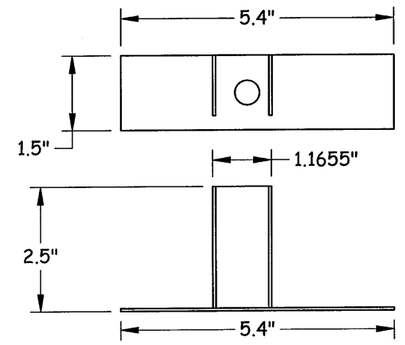

42 EMA BUTTERFLY ANCHOR

17 GA. STEEL
TYPICAL WALL THICKNESS: .054" MIN.

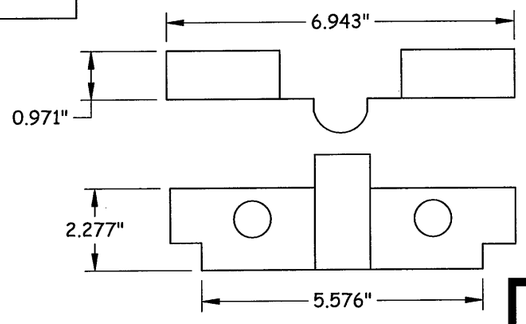

PRODUCT REVISED
as complying with the Florida Building Code
Acceptance No 12-0410.13
Expiration Date 3/26/14
By [signature]
Miami Dade Product Control

HMF EXPRESS

2501 NORTHCHASE PKWY SE
WILMINGTON, NC 28405
PH: (866) 452-1845 FX: (910) 452-1848

TITLE: OS FLUSH STEEL DOOR COMPONENTS (II)

PREPARED BY:
BUILDING DROPS, INC.
398 E. DANIA BEACH BLVD. #338
DANIA BEACH, FL 33004
PH: (954) 399-8478 FX: (954) 744-4738

REVISIONS

NO.	DESCRIPTION	BY	DATE
A	ADDED NOTE TO 40	JLR	10.02.09
D	2010 FBC CODE UPDATES + OPTIONS	MS	02.24.12

11-20-2012
HERMES F. NORERO, PE
FLORIDA P.E. NO. 57278
BUILDING DROPS, INC.
398 E. DANIA BEACH BLVD. #338
DANIA BEACH, FL 33004
FBPE CERT. OF AUTHORIZATION NO. 29578

DATE: 06.09.09
DWN BY: GRN
CHK BY: HN
SCALE: NTS

DWG #: HMF001

SHEET: 12 OF 15

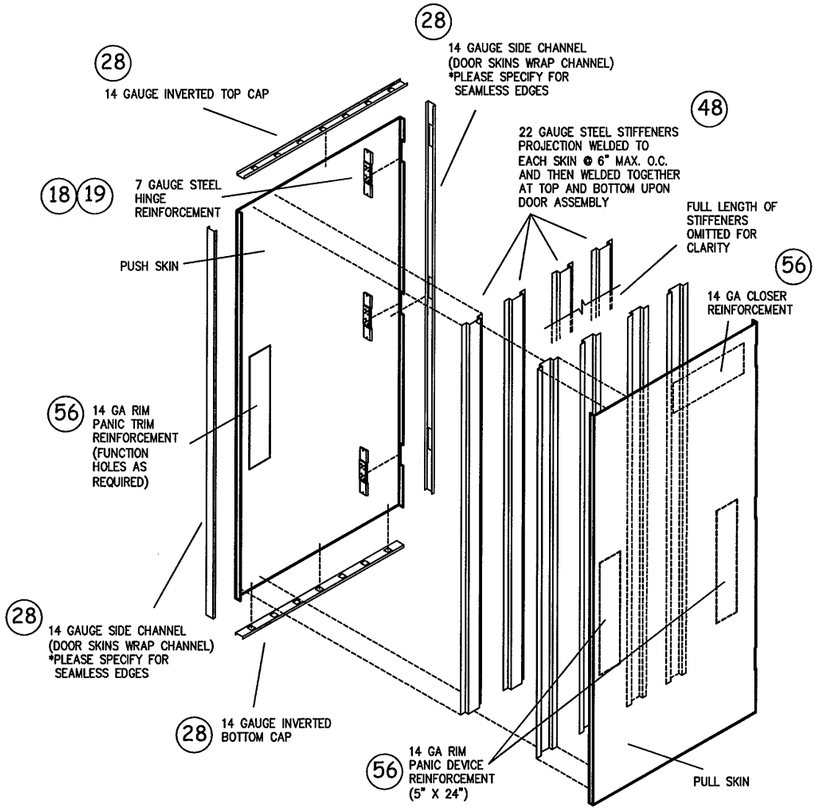

NOTES:
- 35.6875 MAX DOOR WIDTH (86.5625 W/ ASTRAGAL)
- 85.5 MAX DOOR HEIGHT
- ESTIMATED PERFORMANCE STC 24, R 1.17, U .855
- TESTING STANDARDS – UBC 7.2, NFPA 252, UL 10-C
- BUTT EDGE FLUSH DOORS 16 AND 18 GAUGE STEEL (CRS OR A60)
- SQUARE EDGE STANDARD/ BEVELED UPON REQUEST
- SPACES BETWEEN STIFFENERS FILLED W/ FIBERGLASS INSULATION
- MAXIMUM SPACING FOR STIFFENERS @ 6" O.C.

TOP VIEW OF SINGLE STIFFENER

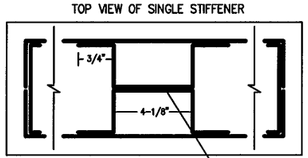

22 GA. STIFFENER DETAIL
PANIC DEVICE

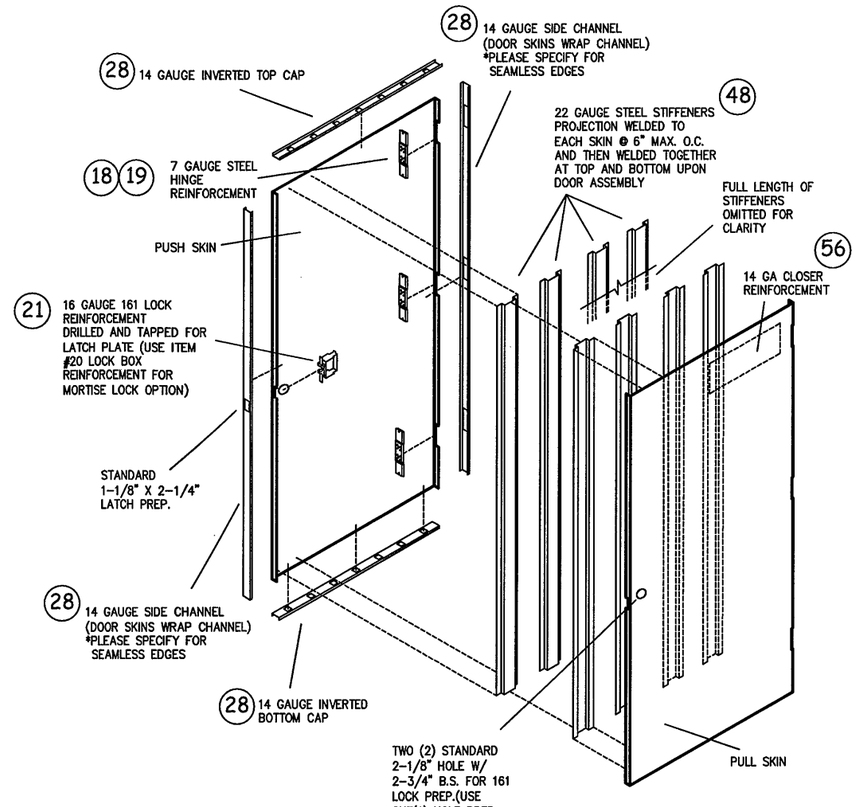

NOTES:
- 35.6875 MAX DOOR WIDTH (86.5625 W/ ASTRAGAL)
- 85.5 MAX DOOR HEIGHT
- ESTIMATED PERFORMANCE STC 24, R 1.17, U .855
- TESTING STANDARDS – UBC 7.2, NFPA 252, UL 10-C
- BUTT EDGE FLUSH DOORS 16 AND 18 GAUGE STEEL (CRS OR A60)
- SQUARE EDGE STANDARD/ BEVELED UPON REQUEST
- SPACES BETWEEN STIFFENERS FILLED W/ FIBERGLASS INSULATION
- MAXIMUM SPACING FOR STIFFENERS @ 6" O.C.

TOP VIEW OF SINGLE STIFFENER

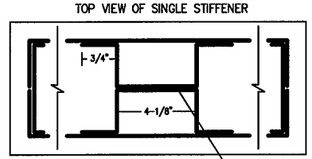

22 GA. STIFFENER DETAIL
MORTISE/ CYLINDRICAL LOCK

PRODUCT REVISED
as complying with the Florida Building Code
Acceptance No 12-0410.13
Expiration Date 2016.14
By Ishaq I. Chanda
Miami Dade Product Control

HMF EXPRESS
2501 NORTHCHASE PKWY SE
WILMINGTON, NC 28405
PH: (866) 452-1845 FX: (910) 452-1848

TITLE: OS FLUSH STEEL DOOR STIFFENER DETAILS

PREPARED BY:
BUILDING DROPS, INC.
398 E. DANIA BEACH BLVD. #338
DANIA BEACH, FL 33004
PH: (954) 399-8478 FX: (954) 744-4738

REVISIONS

NO.	DESCRIPTION	BY	DATE
A	ADDED NOTE TO 40	JLR	10.02.09
B	UPDATED PER MD COMMENT	JLA	01.14.10
D	2010 FBC CODE UPDATES + OPTIONS	MS	02.24.12

11-20-2012
HERMES F. NORIEGA, P.E.
FLORIDA P. E. NO. 72778
BUILDING DROPS, INC.
398 E. DANIA BEACH BLVD. #338
DANIA BEACH, FL 33004
FBPE CERT. OF AUTHORIZATION NO. 29578

DATE: 06.09.09 | DWN BY: GRN | CHK BY: HN | SCALE: NTS

DWG #: HMF001

SHEET: 13 OF 15

43 MASONRY ADJUSTABLE STRAP ANCHOR

16 GA. STEEL
TYPICAL WALL THICKNESS: .060"
SEE SHEET 8 FOR SPECIFICATIONS

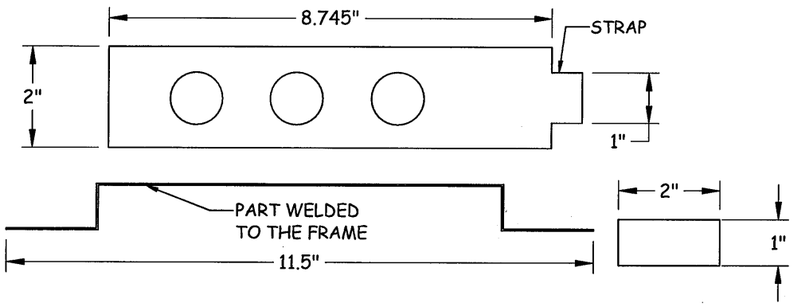

44 WOOD/METAL STUD ANCHOR

18 GA. STEEL
TYPICAL WALL THICKNESS: .048" MIN.

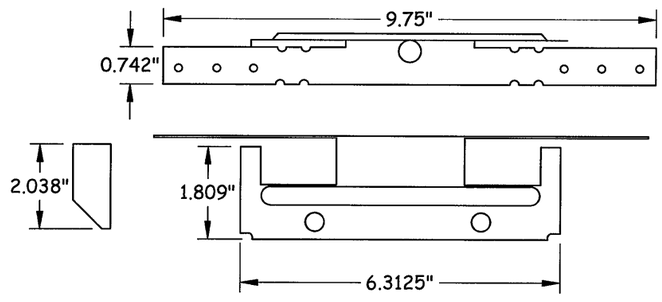

48 STEEL STIFFENERS

22 GA. FORMED STEEL
TYPICAL WALL THICKNESS: .029"

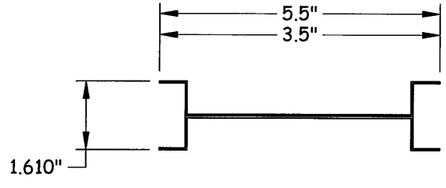

52 WELDED FRAME TAB

17 GA. STEEL
TYPICAL WALL THICKNESS: .029"

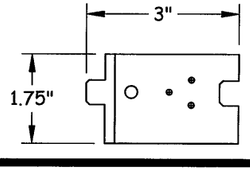

55 SURFACE BOLT STRIKE

17 GA. STEEL
TYPICAL WALL THICKNESS: .125"

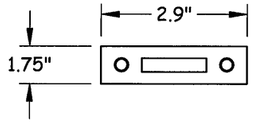

BILL OF MATERIALS

ITEM	PART NUMBER	DESCRIPTION	MATERIAL	MANUFACTUER
1		HMF DOOR SLAB FACE SKIN - ASTM A1008/A653	18 GA. STEEL	HMF EXPRESS
2		STIFFENED NC DOOR SLAB FACE SKIN - ASTM A1008/A653	16 GA. STEEL	HMF EXPRESS
3		H.M.F. HEADER FRAME C.R.S. - ASTM A1008/A653	MIN. 16 GA. STEEL	HMF EXPRESS
4		H.M.F. JAMB FRAMES C.R.S. - ASTM A1008/A653	MIN. 16 GA. STEEL	HMF EXPRESS
5	896N	PANIC THRESHOLD	ALUMINUM	NATIONAL GUARD PRODUCTS
6		THRESHOLD WEATHERSTRIP	VINYL	
7	415S	ADA PASS OVER THRESHOLD	ALUMINUM	HAGER
8		HC1300 MULLION FULL LENGTH, 2" x 3" x 5/16" - ASTM A500 Gr. B	STEEL	DORMA
9		4 1/2" TEMPLATE HINGE	STEEL	HAGER
10		CONTINUOUS STEEL HINGE3.282" W. ROTON HINGE	STEEL	HAGER
11	137NA	SURFACE MOUNTED FRAME WEATHERSTRIP		NATIONAL GUARD PRODUCTS
12	130NA	SURFACE MOUNTED FRAME WEATHERSTRIP		NATIONAL GUARD PRODUCTS
13	200NA	SURFACE MOUNTED DOOR BOTTOM SWEEP		NATIONAL GUARD PRODUCTS
14	125NA	SURFACE MOUNTED DOOR MEETING STILE SEAL		NATIONAL GUARD PRODUCTS
15	3210119	SURFACE MOUNTED DOOR BOTTOM SWEEP		PEMKO
16	63644	ASTRAGAL FACE WEATHERSTRIP	CELLULAR RUBBER	M-D BUILDING PRODUCTS
17	2873	ASTRAGAL FACE WEATHERSTRIP	FOAM	M-D BUILDING PRODUCTS
18		STEEL DOOR HINGE REINFORCEMENT - ASTM A1008/A653	7 GA. STEEL	HMF EXPRESS
19		H.R.S. FRAME HINGE REINFORCEMENT - ASTM A1008/A653	7 GA. STEEL	HMF EXPRESS
20		"DAYTON" MORTISE LOCK BOX - ASTM A1008/A653	18 GA. STEEL	HMF EXPRESS
21		2 PART 161 LOCK REINFORCEMENT - ASTM A1008/A653	STEEL	HMF EXPRESS
22	9400	SURFACE VERTICAL RODS W/ PANIC BAR		DORMA HARDWARE
23	9300	RIM EXIT DEVICE W/ PANIC BAR		DORMA HARDWARE
24		CORB CK 4251 GRC 260 HEAVY DUTY CYLINDRICAL LOCKSET		CORBIN/RUSSWIN
25		CORB DL3000 260SS HEAVY DUTY CYLINDRICAL DEADLOCK		CORBIN/RUSSWIN
26		CORB ML2000 SERIES MORTISE LOCKSET W/ DEADBOLT		CORBIN/RUSSWIN
27	454	SURFACE BOLTS 5" LONG	STEEL	IVES
28		TOP, BOTTOM, & SIDE CHANNEL - ASTM A1008/A653	14 GA. STEEL	HMF EXPRESS
29		FOAM STOPPER	FOAM	HMF EXPRESS
30		COMMERCIAL Z-ASTRAGAL 0.062" MIN. - ASTM A1008/A653	STEEL	HMF EXPRESS
31	W030317028	COMMERCIAL FLAT ASTRAGAL 0.125" - ASTM A1008/A653	STEEL	HMF EXPRESS
32		#8 X 1/2" PPH SELF TAPPING SHEET METAL SCREW (WEATHERSTRIP TO FRAME)	STEEL	
33		#10 X 3/4" PPH SELF TAPPING SHEET METAL SCREW (SWEEP TO DOOR)	STEEL	
34		3/8" KWIK BOLT 3 (MULLION ANCHOR BRACKET TO SILL)	STEEL	HILTI
35		#12 - 24 X 5/8" LG. MACHINE SCREW (RIM DEVICE STRIKE TO MULLION)	STEEL	
36		#12 - 24 X 1/2" MACHINE SCREW (HINGE TO FRAME & DOOR)	STEEL	
37		#12 - 24 X 1 1/2" PFH WOOD SCREW (SURFACE BOLT STRIKE TO BUCK AT SILL)	STEEL	
38		3/8" X 1 1/2" PPH SCREW W/ 3/8" SEX BOLT (SURFACE BOLT ATTACHMENT)	STEEL	
39		MASONRY "TEE" ANCHOR 0.058" MIN.	STEEL	HMF EXPRESS
40		MASONRY WIRE ANCHOR 0.185" DIA.	STEEL	HMF EXPRESS
41		EMA WELDED ANCHOR 0.058" MIN.	STEEL	HMF EXPRESS
42		EMA BUTTERFLY ANCHOR 0.048"MIN.	STEEL	HMF EXPRESS
43		MASONRY ADJUSTABLE STRAP ANCHOR 0.038" MIN.	STEEL	HMF EXPRESS
44		WOOD/METAL STUD ANCHOR 0.042" MIN.	STEEL	HMF EXPRESS
45		3/8" DYNA BOLT BY ITW RED HEAD (USED W/ EMA WELDED, ITEM #41, & EMA BUTTERFLY ANCHORS, ITEM #42)	STEEL	ITW RED HEAD
46		EXPANDED POLYSTYRENE (EPS) FOAM CORE USED IN THE HMF 18 GA. DOOR AS PER CURRENT NOA	FOAM	CARPENTER COMPANY
47		FIBERGLASS INSULATION CORE (USED IN THE HMF 16 GA. DOOR)	FIBERGLASS	
48		STEEL STIFFNERS	22 GA. STEEL	HMF EXPRESS
49		1/4" x 2 1/4" Hilti Kwik Con II+	STEEL	HILTI
50		#8 WOOD SCREW (WOOD/METAL STUD ANCHOR TO WOOD)	STEEL	COMMON BRIGHT
51		3/8" X 5.0" SLOTTED FLAT HEAD LAG SCREW (USED W/ EMA WELDED, ITEM #41, & EMA BUTTERFLY ANCHORS, ITEM #42)	STEEL	
52		WELDED FRAME TAB	STEEL	HMF EXPRESS
53		#12 X 1/2" PAN HEAD SELF DRILL OR TAPPING SCREW	STEEL	
54		1/4 - 20 SEX BOLT	STEEL	
55		SURFACE BOLT STRIKE	STEEL	IVES
56		RIM DEVICE/CLOSER REINFORCEMENT	14 GA. STEEL	HMF EXPRESS
57		5/16" X 1/2" FHPMS (MULLION ANCHOR BRACKET TO FRAME HEAD)	STEEL	
58		1/4-14 ITW TEK SCREWS (WOOD/METAL STUD ANCHOR TO STEEL STUD)	STEEL	ITW BUILDEX
59		STEEL MOUNTING PLATE, 2" X 6" X 1/4" (FOR MULLION BRACKET TO CONCRETE)	STEEL	DORMA

PRODUCT REVISED
In complying with the Florida Building Code
Application No. 12-0410.13
Expiration Date 8/26/14
Ishaq L. Chanda
State Product Control

HMF EXPRESS
2501 NORTHCHASE PKWY SE
WILMINGTON, NC 28405
PH: (866) 452-1845 FX: (910) 452-1848

TITLE: OS FLUSH STEEL DOOR COMPONENTS, DETAILS & BILL OF MATERIALS

PREPARED BY:
BUILDING DROPS, INC.
398 E. DANIA BEACH BLVD. #338
DANIA BEACH, FL 33004
PH: (954) 399-8478 FX: (954) 744-4738

REVISIONS

NO.	DESCRIPTION	BY	DATE
A	UPDATED B.O.M. PER M-D COMMENT	JLR	10.02.09
B	UPDATED PER MD COMMENT	MS	01.13.10
C	UPDATED PER MD COMMENT	KSD	02.11.10
D	2010 FBC CODE UPDATES + OPTIONS	MS	02.24.12

11-20-2012
HERMES F. NORETO, P.E.
FLORIDA P.E. LIC. NO. 73778
BUILDING DROPS, INC.
398 E. DANIA BEACH BLVD. #338
DANIA BEACH, FL 33004
FBPE CERT. OF AUTHORIZATION NO. 29578

DATE: 06.09.09
DWN BY: GRN
CHK BY: HN
SCALE: NTS

DWG #: HMF001

SHEET: 14 OF 15

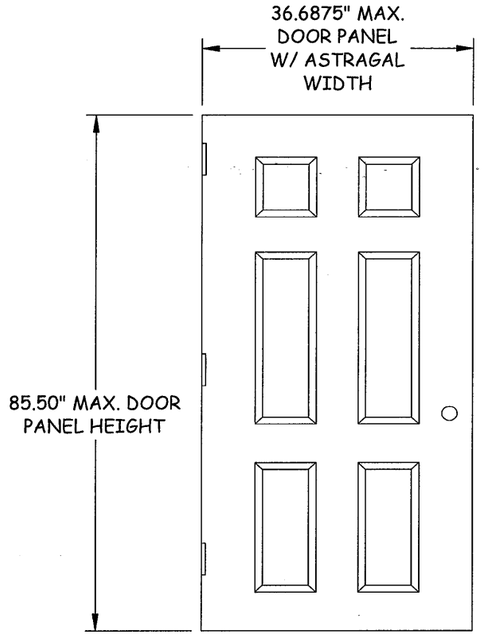

CLASSIC 6-PANEL

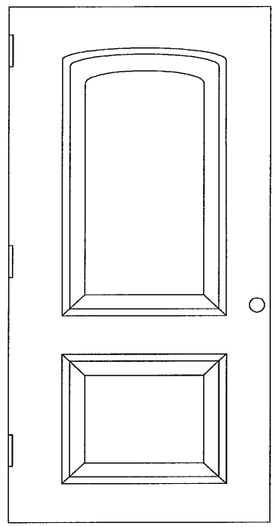

HIGH-DEFINITION 2-PANEL ARCH

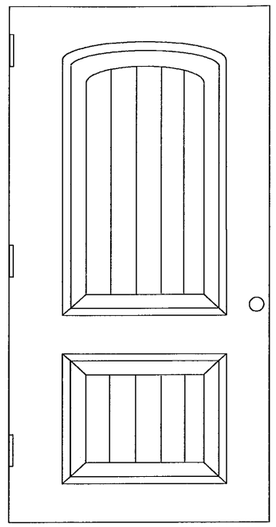

HIGH-DEFINITION 2-PANEL ARCH WITH PLANK

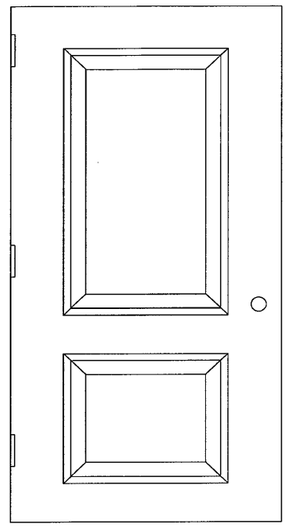

HIGH-DEFINITION 2-PANEL

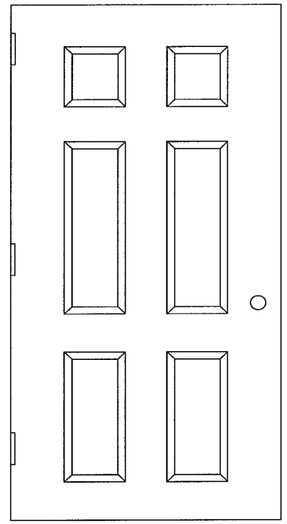

NARROW 6-PANEL

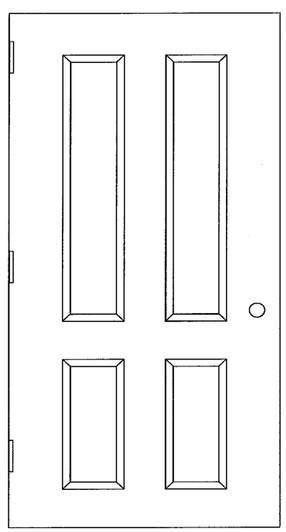

CLASSIC 4-PANEL

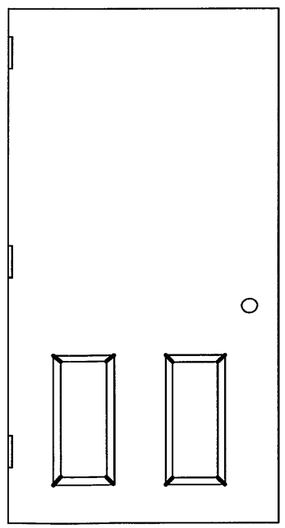

2-PANEL TOP BLANK

NOTE: EMBOSSED PANELS FOR USE WITH 18 GA. DOOR CONSTRUCTION ONLY.

PRODUCT REVISED
as complying with the Florida Building Code
Anticipated No. 12-0410.13
Expiration Date Aug 26 2014
Ishaq I. Chanda
Florida Building Product Control

HMF EXPRESS
2501 NORTHCHASE PKWY SE
WILMINGTON, NC 28405
PH: (866) 452-1845 FX: (910) 452-1848

TITLE:
OS FLUSH STEEL DOOR
QUALIFIED PANEL
CONFIGURATIONS

PREPARED BY:
BUILDING DROPS, INC.
398 E. DANIA BEACH BLVD. #338
DANIA BEACH, FL 33004
PH: (954) 399-8478 FX: (954) 744-4738

REVISIONS

NO.	DESCRIPTION	BY	DATE
A	UPDATED B.O.M. PER M-D COMMENT	JLR	10.02.09
B	UPDATED PER MD COMMENT	MS	01.13.10
C	UPDATED PER MD COMMENT	KSD	02.11.10
D	2010 FBC CODE UPDATES + OPTIONS	MS	02.24.12

11-20-2012
HERMES F. NORERO, P.E.
FLORIDA P. E. NO. 73778
BUILDING DROPS, INC.
398 E. DANIA BEACH BLVD. #338
DANIA BEACH, FL 33004
FBPE CERT. OF AUTHORIZATION NO. 29578

DATE: 06.09.09
DWN BY: GRN
CHK BY: HN
SCALE: NTS

DWG #: HMF001

SHEET: 15 OF 15