MIAMI-DADE COUNTY
DEPARTMENT OF PERMITTING, ENVIRONMENT, AND REGULATORY AFFAIRS (PERA)
BOARD AND CODE ADMINISTRATION DIVISION

MIAMI-DADE COUNTY
PRODUCT CONTROL SECTION
11805 SW 26 Street, Room 208
Miami, Florida 33175-2474
T (786) 315-2590 F (786) 315-2599
www.miamidade.gov/pera/

NOTICE OF ACCEPTANCE (NOA)

T. M. Windows, LLC
601 N.W. 12th Ave.
Pompano Beach, FL 33069

SCOPE:

This NOA is being issued under the applicable rules and regulations governing the use of construction materials. The documentation submitted has been reviewed and accepted by Miami-Dade County PERA - Product Control Section to be used in Miami Dade County and other areas where allowed by the Authority Having Jurisdiction (AHJ).

This NOA shall not be valid after the expiration date stated below. The Miami-Dade County Product Control Section (In Miami Dade County) and/or the AHJ (in areas other than Miami Dade County) reserve the right to have this product or material tested for quality assurance purposes. If this product or material fails to perform in the accepted manner, the manufacturer will incur the expense of such testing and the AHJ may immediately revoke, modify, or suspend the use of such product or material within their jurisdiction. PERA reserves the right to revoke this acceptance, if it is determined by Miami-Dade County Product Control Section that this product or material fails to meet the requirements of the applicable building code.

This product is approved as described herein, and has been designed to comply with the Florida Building Code, including the High Velocity Hurricane Zone.

DESCRIPTION: Series "350" Aluminum Sliding Glass Door (Reinforced) – L.M.I.

APPROVAL DOCUMENT: Drawing No. **W02–87**, titled "Series–350 Aluminum Sliding Glass Door (L.M.I.)", sheets 1 through 10 of 10, dated 09/25/02, with revision "**E**" dated 03/13/12, prepared by Al–Farooq Corporation, signed and sealed by Javad Ahmad, P. E., bearing the Miami–Dade County Product Control Revision stamp with the Notice of Acceptance number and expiration date by the Miami-Dade County Product Control Section.

MISSILE IMPACT RATING: Large and Small Missile Impact Resistant

LIMITATION: See sheet 6 of 10 for exterior (positive) pressure water rating vs sill height.

LABELING: Each unit shall bear a permanent label with the manufacturer's name or logo, city, state, model/series, and following statement: "Miami–Dade County Product Control Approved", unless otherwise noted herein.

RENEWAL of this NOA shall be considered after a renewal application has been filed and there has been no change in the applicable building code negatively affecting the performance of this product.

TERMINATION of this NOA will occur after the expiration date or if there has been a revision or change in the materials, use, and/or manufacture of the product or process. Misuse of this NOA as an endorsement of any product, for sales, advertising or any other purposes shall automatically terminate this NOA. Failure to comply with any section of this NOA shall be cause for termination and removal of NOA.

ADVERTISEMENT: The NOA number preceded by the words Miami–Dade County, Florida, and followed by the expiration date may be displayed in advertising literature. If any portion of the NOA is displayed, then it shall be done in its entirety.

INSPECTION: A copy of this entire NOA shall be provided to the user by the manufacturer or its distributors and shall be available for inspection at the job site at the request of the Building Official.

This NOA **revises NOA No. 08–0617.03** and consists of this page 1 and evidence pages E–1 and E–2, as well as approval document mentioned above.

The submitted documentation was reviewed by **Jamie D. Gascon, P. E.**

MIAMI-DADE COUNTY APPROVED

J. Gascon
7/10/12

NOTICE OF ACCEPTANCE: EVIDENCE SUBMITTED

A. DRAWINGS

1. Manufacturer's die drawings and sections.
   (Submitted under previous NOA No. 01–1203.02)
2. Drawing No. **W02–87**, titled "Series–350 Aluminum Sliding Glass Door (L.M.I.)", sheets 1 through 10 of 10, dated 09/25/02, with revision "**E**" dated 03/13/12, prepared by Al–Farooq Corporation, signed and sealed by Javad Ahmad, P.E.

B. TESTS

1. Test reports on: 1) Air Infiltration Test, per FBC, TAS 202–94
   2) Uniform Static Air Pressure Test, Loading per FBC TAS 202–94
   3) Water Resistance Test, per FBC, TAS 202–94
   4) Large Missile Impact Test per FBC, TAS 201–94
   5) Cyclic Wind Pressure Loading per FBC, TAS 203–94
   6) Forced Entry Test, per FBC 2411 3.2.1, TAS 202–94

   along with marked–up drawings and installation diagram of aluminum sliding glass door, prepared by Fenestration Testing Laboratory, Inc., Test Report No. **FTL–5438** dated 12/13/07, signed and sealed by Carlos S. Rionda, P. E.
   (Submitted under previous NOA No. 07–1009.03)
2. Test reports on: 1) Air Infiltration Test, per FBC, TAS 202–94
   2) Uniform Static Air Pressure Test, Loading per FBC TAS 202–94
   3) Water Resistance Test, per FBC, TAS 202–94
   4) Large Missile Impact Test per FBC, TAS 201–94
   5) Cyclic Wind Pressure Loading per FBC, TAS 203–94
   6) Forced Entry Test, per FBC 2411 3.2.1, TAS 202–94

   along with marked–up drawings and installation diagram of aluminum sliding glass door, prepared by Fenestration Testing Laboratory, Inc., Test Reports No.'s **FTL–3088** dated 11/19/01 and **FTL–3188** dated 03/23/01, both signed and sealed by Luis Figueredo, P. E.
   (Submitted under previous NOA No. 01–1203.02)
3. Test reports on: 1) Air Infiltration Test, per FBC, TAS 202–94
   2) Uniform Static Air Pressure Test, Loading per FBC TAS 202–94
   3) Water Resistance Test, per FBC, TAS 202–94
   4) Large Missile Impact Test per FBC, TAS 201–94
   5) Cyclic Wind Pressure Loading per FBC, TAS 203–94
   6) Forced Entry Test, per FBC 2411 3.2.1, TAS 202–94

   along with marked–up drawings and installation diagram of aluminum sliding glass door, prepared by Fenestration Testing Laboratory, Inc., Test Reports No.'s **FTL–2771** dated 01/15/01 and **FTL–2976** dated 03/02/01, both signed and sealed by Antonio Acevedo, P. E.
   (Submitted under previous NOA No. 01–1203.02)

Jaime D. Gascon, P. E.
Product Control Section Supervisor
NOA No. 12–0410.15
Expiration Date: January 23, 2013
Approval Date: July 12, 2012

NOTICE OF ACCEPTANCE:EVIDENCE SUBMITTED

C. CALCULATIONS

1. Anchor verification calculations and structural analysis, complying with **FBC–2010**, prepared by Al–Farooq Corporation, dated 03/29/12, signed and sealed by Javad Ahmad, P.E.
2. **Glazing complies with ASTM E1300–04.**

D. QUALITY ASSURANCE

1. Miami–Dade Department of Permitting, Environment, and Regulatory Affairs (PERA).

E. MATERIAL CERTIFICATIONS

1. Notice of Acceptance No. **08–0520.08** issued to **Solutia, Inc.** for their "**Vanceva Composites Glass Interlayer**" dated 07/17/08, expiring on 12/11/13.
2. Notice of Acceptance No. **11–0624.02** issued to E.I. DuPont DeNemours & Co., Inc. for their "**DuPont Sentry Glass® Interlayer**" dated 05/26/2010, expiring on 01/14/17

F. STATEMENTS

1. Statement letter of conformance, complying with **FBC–2010**, and of no financial interest, issued by Al–Farooq Corporation, dated 03/21/12, signed and sealed by Javad Ahmad, P.E.
2. Proposal issued by Product Control, dated 01/20/05, signed by Jaime D. Gascon, P. E. ***(Submitted under previous NOA No. 07–1009.03)***
3. Laboratory compliance letter for Test Report No. **FTL–4595**, dated 04/18/05 and **FTL–5438** dated 12/13/07, issued by Fenestration Testing Laboratory, Inc., signed and sealed by Carlos S. Rionda, P. E.
   (Submitted under previous NOA No. 07–1009.03)
4. Laboratory compliance letter for Test Reports No.'s **FTL–3088** dated 11/19/01 and **FTL–3188** dated 03/23/01, issued by Fenestration Testing Laboratory, Inc., all signed and sealed by Luis Figueredo, P. E.
   (Submitted under previous NOA No. 01–1203.02)
5. Laboratory compliance letter for Test Reports No.'s **FTL–2771** dated 01/15/01 and **FTL–2976** dated 03/02/01, issued by Fenestration Testing Laboratory, Inc., all signed and sealed by Antonio Acevedo, P. E.
   (Submitted under previous NOA No. 01–1203.02)

G. OTHERS

1. Notice of Acceptance No. **08–0617.03**, issued to T. M. Window & Door Co. for their Series "**350 Aluminum Sliding Glass Door (Reinforced) – L.M.I.**", approved on 10/16/08 and expiring on 01/23/13.

Jaime D. Gascon, P. E.
Product Control Section Supervisor
NOA No. 12–0410.15
Expiration Date: January 23, 2013
Approval Date: July 12, 2012

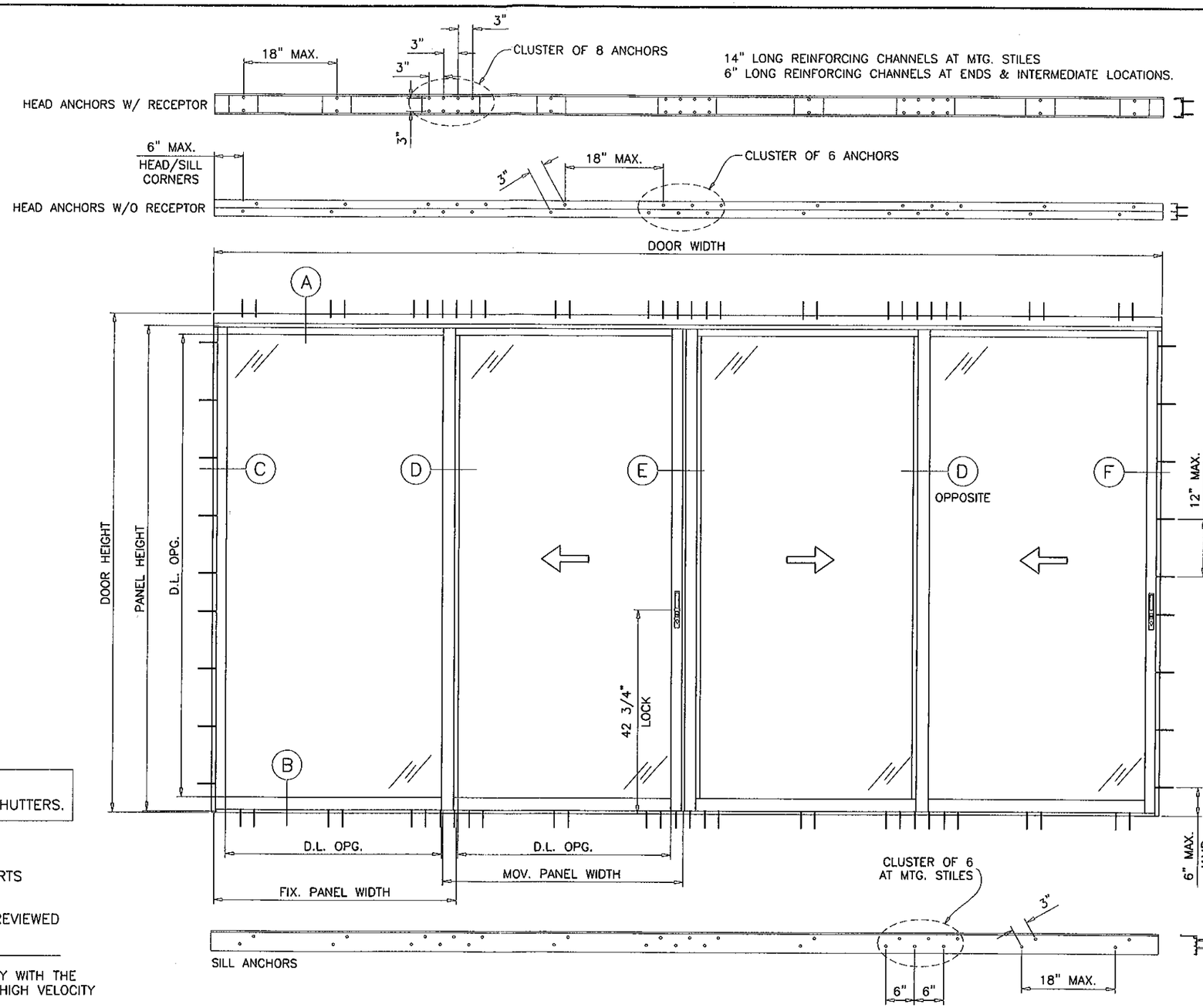

DOORS GLAZED WITH LAMINATED GLASS RATED FOR LARGE & SMALL MISSILE IMPACT AND REQUIRE NO SHUTTERS.

SERIES-350 ALUM. SLIDING GLASS DOOR

DESIGN LOAD RATING FOR DOORS TO BE AS PER CHARTS SHOWN ON SHEETS 3 & 4.

APPLICABLE EGRESS REQUIREMENTS PER FBC TO BE REVIEWED BY BUILDING OFFICIAL.

THIS PRODUCT HAS BEEN DESIGNED AND TESTED TO COMPLY WITH THE REQUIREMENTS OF THE FLORIDA BUILDING CODE INCLUDING HIGH VELOCITY HURRICANE ZONE (HVHZ).

1BY OR 2BY WOOD BUCKS BY OTHERS, MUST BE ANCHORED PROPERLY TO TRANSFER LOADS TO THE STRUCTURE.

ANCHORS SHALL BE AS LISTED, SPACED AS SHOWN ON DETAILS, ANCHORS EMBEDMENT TO BASE MATERIAL SHALL BE BEYOND WALL DRESSING OR STUCCO.

ANCHORING OR LOADING CONDITIONS NOT SHOWN IN THESE DETAILS ARE NOT PART OF THIS APPROVAL.

A LOAD DURATION INCREASE IS USED IN DESIGN OF ANCHORS INTO WOOD ONLY.

MATERIALS INCLUDING BUT NOT LIMITED TO STEEL/METAL SCREWS, THAT COME INTO CONTACT WITH OTHER DISSIMILAR MATERIALS SHALL MEET THE REQUIREMENTS OF THE FLORIDA BLDG. CODE SECTION 2003.8.4.

TYPICAL ELEVATION

PRODUCT REVISED
as complying with the Florida Building Code
Acceptance No 12-0410.15
Expiration Date 01/23/2013
By Miami-Dade Product Control

DAYLITE OPENINGS:
D.L.O. HEIGHT = DOOR HEIGHT - 7.125"
D.L.O. WIDTH (FIX. PANEL) = PANEL WIDTH - 5.575"
D.L.O. WIDTH (OPER. PANEL) = PANEL WIDTH - 5.675"

Engr: JAVAD. AHMAD
CIVIL
FLA. PE # 70592
C.A.N. 3538
APR 18 2012

AL-FAROOQ CORPORATION
ENGINEERS & PRODUCT DEVELOPMENT
1235 S.W. 87 AVE
MIAMI, FLORIDA 33174
TEL. (305) 264-8100 FAX. (305) 262-6978
COMP-ANL\W02-87TMW

SERIES-350 ALUM. SLIDING GLASS DOOR (L.M.I.)

T.M. WINDOWS LLC.
601 N.W. 12TH AVE.
POMPANO BEACH, FL. 33069
TEL. (954) 781-5078 FAX. (954) 781-4430

revisions:

no	date	by	description
A	08.01.05		UPDATED FOR 2004 FBC
B	04.15.08		GENERAL REVISION
C	08.28.08		REV. PER BCCO COMMENTS
D	09.12.08		REV. PER BCCO COMMENTS
E	03.13.12		UPDATED TO 2010 FBC

date: 09-25-02
scale: 1/2"=1'-0"
dr. by: HAMID
chk. by:

drawing no.
W02-87

sheet 1 of 10

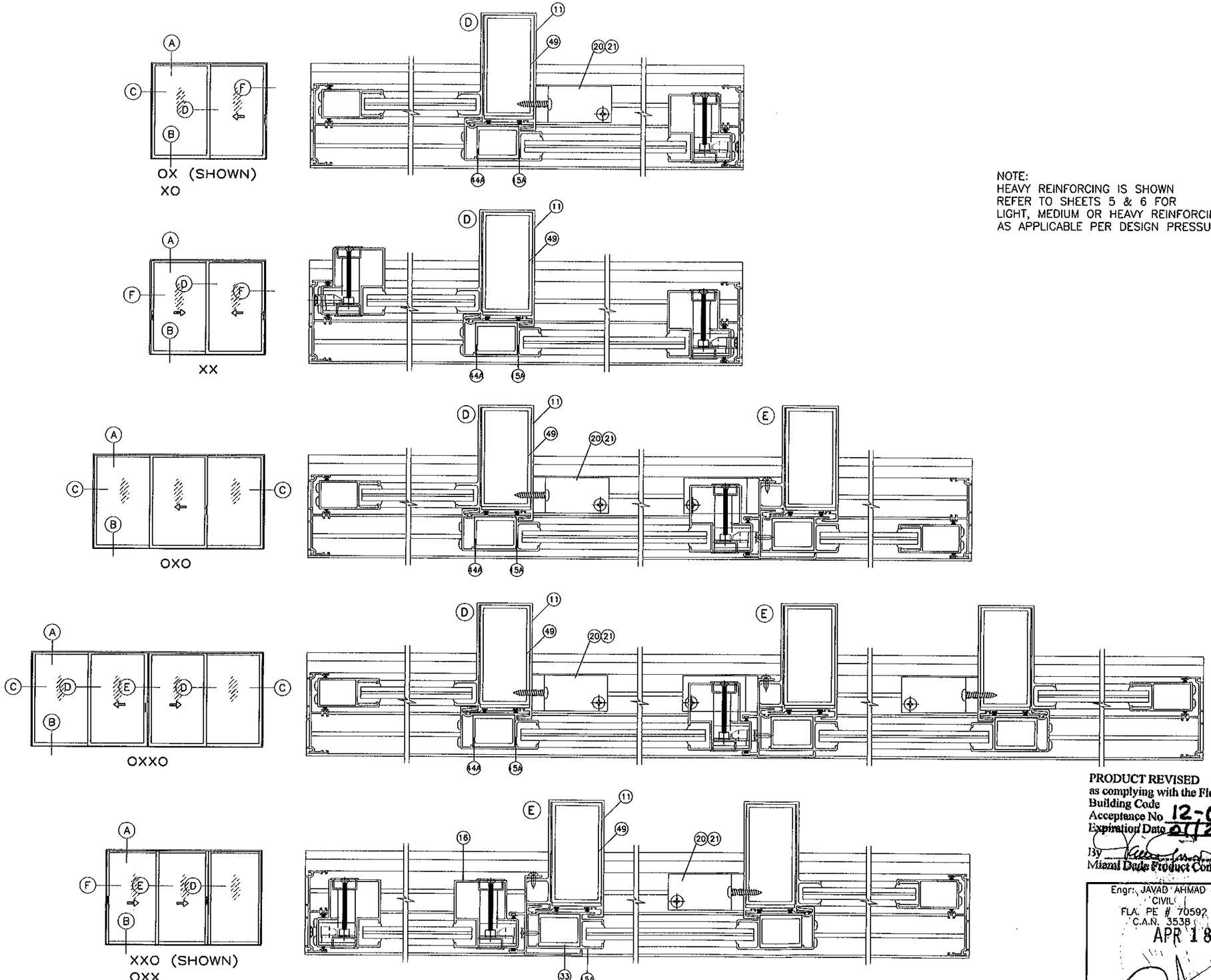

APPROVED CONFIGURATIONS

NOTE:
HEAVY REINFORCING IS SHOWN
REFER TO SHEETS 5 & 6 FOR
LIGHT, MEDIUM OR HEAVY REINFORCING
AS APPLICABLE PER DESIGN PRESSURE CHART.

PRODUCT REVISED
as complying with the Florida
Building Code
Acceptance No 12-0410.15
Expiration Date 01/23/2013
By
Miami Dade Product Control

Engr: JAVAD AHMAD
CIVIL
FLA. PE # 70592
C.A.N. 3538
APR 18 2012

AL-FAROOQ CORPORATION
ENGINEERS & PRODUCT DEVELOPMENT
1235 S.W. 87 AVE
MIAMI, FLORIDA 33174
TEL. (305) 264-8100 FAX. (305) 262-6978
COMP-ANL\W02-87TMW

SERIES-350 ALUM. SLIDING GLASS DOOR (L.M.I.)

T.M. WINDOWS LLC.
601 N.W. 12TH AVE.
POMPANO BEACH, FL. 33069
TEL. (954) 781-4430 FAX. (954) 781-5078

revisions:

no	date	by	description
C	08.28.08		REV. PER BCCO COMMENTS
D	09.12.08		REV. PER BCCO COMMENTS
E	03.13.12		NO CHANGE THIS SHEET

date: 09-25-02
scale: 1/2"=1'-0"
dr. by: HAMID
chk. by:

drawing no.
W02-87

DESIGN LOAD CAPACITY – PSF
DOORS W/O HEAD RECEPTOR
LIGHT REINFORCING
SEE SHEET 5 FOR DETAILS

PANEL WIDTH INCHES	DOOR HEIGHT INCHES	ANCHORS TYPE 'A'		ANCHORS TYPE 'B'		ANCHORS TYPE 'F'	
		EXT.(+)	INT.(–)	EXT.(+)	INT.(–)	EXT.(+)	INT.(–)
24	80	75.0	75.0	75.0	75.0	75.0	75.0
30		75.0	75.0	75.0	75.0	75.0	75.0
36		75.0	75.0	75.0	75.0	75.0	75.0
42		75.0	71.4	75.0	71.4	75.0	71.4
48		75.0	65.8	75.0	65.8	75.0	65.8
54		75.0	61.8	75.0	61.8	75.0	61.8
24	84	75.0	75.0	75.0	75.0	75.0	75.0
30		75.0	75.0	75.0	75.0	75.0	75.0
36		75.0	74.5	75.0	74.5	75.0	74.5
42		75.0	66.9	75.0	66.9	75.0	66.9
48		75.0	61.5	75.0	61.5	75.0	61.5
54		74.8	57.5	74.8	57.5	74.8	57.5
24	90	75.0	75.0	75.0	75.0	75.0	75.0
30		75.0	75.0	75.0	75.0	75.0	75.0
36		75.0	68.3	75.0	68.3	75.0	68.3
42		75.0	61.1	75.0	61.1	75.0	61.1
48		72.6	55.9	72.6	55.9	72.6	55.9
24	96	75.0	75.0	75.0	75.0	75.0	75.0
30		75.0	72.8	75.0	72.8	75.0	72.8
36		75.0	63.0	75.0	63.0	75.0	63.0
42		73.0	56.2	73.0	56.2	73.0	56.2
48		66.6	51.2	66.6	51.2	66.6	51.2
24	96–1/2	75.0	75.0	75.0	75.0	75.0	75.0
30		75.0	72.4	75.0	72.4	75.0	72.4
36		75.0	62.6	75.0	62.6	75.0	62.6
42		72.6	55.8	72.6	55.8	72.6	55.8
48		66.1	50.9	66.1	50.9	66.1	50.9

DESIGN LOAD CAPACITY – PSF
DOORS W/O HEAD RECEPTOR
MEDIUM REINFORCING
SEE SHEET 5 FOR DETAILS

PANEL WIDTH INCHES	DOOR HEIGHT INCHES	ANCHORS TYPE 'A'		ANCHORS TYPE 'B'		ANCHORS TYPE 'F'	
		EXT.(+)	INT.(–)	EXT.(+)	INT.(–)	EXT.(+)	INT.(–)
24	84	100.0	120.0	100.0	120.0	100.0	120.0
30		100.0	120.0	100.0	120.0	100.0	120.0
36		100.0	120.0	100.0	120.0	100.0	120.0
42		100.0	120.0	100.0	120.0	100.0	120.0
48		100.0	109.0	100.0	120.0	100.0	120.0
54		96.9	96.9	100.0	120.0	100.0	120.0
60		87.2	87.2	100.0	120.0	100.0	120.0
24	90	100.0	120.0	100.0	120.0	100.0	120.0
30		100.0	120.0	100.0	120.0	100.0	120.0
36		100.0	120.0	100.0	120.0	100.0	120.0
42		100.0	112.1	100.0	120.0	100.0	120.0
48		100.0	102.5	100.0	120.0	100.0	120.0
54		95.5	95.5	100.0	120.0	100.0	120.0
24	96	100.0	120.0	100.0	120.0	100.0	120.0
30		100.0	120.0	100.0	120.0	100.0	120.0
36		100.0	115.7	100.0	120.0	100.0	120.0
42		100.0	103.1	100.0	120.0	100.0	120.0
48		94.0	94.0	100.0	119.0	100.0	119.0
54		87.2	87.2	100.0	110.3	100.0	110.3
24	102	100.0	120.0	100.0	120.0	100.0	120.0
30		100.0	120.0	100.0	120.0	100.0	120.0
36		100.0	107.4	100.0	120.0	100.0	120.0
42		95.5	95.5	100.0	120.0	100.0	120.0
48		86.8	86.8	100.0	109.8	100.0	109.8
24	108	100.0	120.0	100.0	120.0	100.0	120.0
30		100.0	116.4	100.0	120.0	100.0	120.0
36		100.0	100.3	100.0	120.0	100.0	120.0
42		88.9	88.9	100.0	112.2	100.0	112.2
48		80.6	80.6	100.0	101.7	100.0	101.7

DESIGN LOAD CAPACITY – PSF
DOORS W/O HEAD RECEPTOR
HEAVY REINFORCING
SEE SHEET 5 FOR DETAILS

PANEL WIDTH INCHES	DOOR HEIGHT INCHES	ANCHORS TYPE 'A'		ANCHORS TYPE 'B'		ANCHORS TYPE 'F'	
		EXT.(+)	INT.(–)	EXT.(+)	INT.(–)	EXT.(+)	INT.(–)
24	84	100.0	120.0	100.0	120.0	100.0	120.0
30		100.0	120.0	100.0	120.0	100.0	120.0
36		100.0	120.0	100.0	120.0	100.0	120.0
42		100.0	120.0	100.0	120.0	100.0	120.0
48		100.0	109.0	100.0	120.0	100.0	120.0
54		96.9	96.9	100.0	120.0	100.0	120.0
60		87.2	87.2	100.0	120.0	100.0	120.0
24	90	100.0	120.0	100.0	120.0	100.0	120.0
30		100.0	120.0	100.0	120.0	100.0	120.0
36		100.0	120.0	100.0	120.0	100.0	120.0
42		100.0	112.1	100.0	120.0	100.0	120.0
48		100.0	102.5	100.0	120.0	100.0	120.0
54		95.5	95.5	100.0	120.0	100.0	120.0
60		87.2	87.2	100.0	120.0	100.0	120.0
24	96	100.0	120.0	100.0	120.0	100.0	120.0
30		100.0	120.0	100.0	120.0	100.0	120.0
36		100.0	115.7	100.0	120.0	100.0	120.0
42		100.0	103.1	100.0	120.0	100.0	120.0
48		94.0	94.0	100.0	120.0	100.0	120.0
54		87.2	87.2	100.0	120.0	100.0	120.0
60		82.0	82.0	100.0	120.0	100.0	120.0
24	102	100.0	120.0	100.0	120.0	100.0	120.0
30		100.0	120.0	100.0	120.0	100.0	120.0
36		100.0	107.4	100.0	120.0	100.0	120.0
42		95.5	95.5	100.0	120.0	100.0	120.0
48		86.8	86.8	100.0	120.0	100.0	120.0
54		80.2	80.2	100.0	120.0	100.0	120.0
24	108	100.0	120.0	100.0	120.0	100.0	120.0
30		100.0	116.4	100.0	120.0	100.0	120.0
36		100.0	100.3	100.0	120.0	100.0	120.0
42		88.9	88.9	100.0	120.0	100.0	120.0
48		80.6	80.6	100.0	120.0	100.0	120.0
54		74.3	74.3	100.0	120.0	100.0	120.0
24	114	100.0	120.0	100.0	120.0	100.0	120.0
30		100.0	109.4	100.0	120.0	100.0	120.0
36		94.0	94.0	100.0	120.0	100.0	120.0
42		83.2	83.2	100.0	120.0	100.0	120.0
48		75.2	75.2	100.0	120.0	100.0	120.0
24	120	100.0	120.0	100.0	120.0	100.0	120.0
30		100.0	103.1	100.0	120.0	100.0	120.0
36		88.5	88.5	100.0	120.0	100.0	120.0
42		78.1	78.1	100.0	120.0	100.0	120.0
48		70.5	70.5	100.0	120.0	100.0	120.0

ALL EXTERIOR(+) LOADS SHOWN ON THIS SHEET ARE FOR DOORS USING FRAME SILL '4A' & '4B'
FOR DOORS USING FRAME SILL '4' LIMIT EXT.(+) LOADS TO 90.0 PSF

PRODUCT REVISED
as complying with the Florida Building Code
Acceptance No 12-0410.15
Expiration Date 01/23/2013
By
Miami Dade Product Control

GLASS TYPES A OR B ARE APPLICABLE TO CHARTS

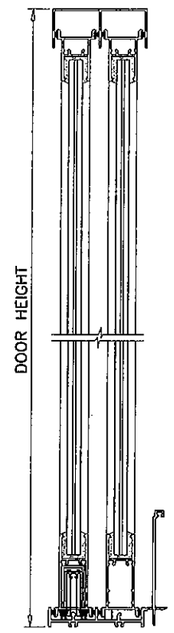

DOOR HEIGHTS
W/O HEAD RECEPTOR

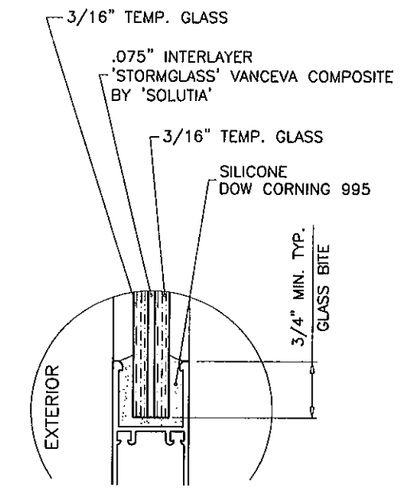

GLASS TYPE 'A'

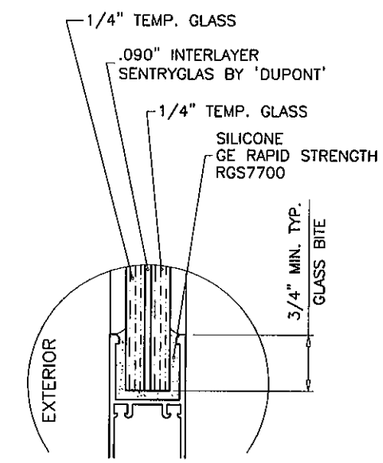

GLASS TYPE 'B'

GLAZING OPTIONS

NOTE:
GLASS CAPACITIES ON THIS SHEET ARE BASED ON ASTM E1300–04 (3 SEC. GUSTS) AND FLORIDA BUILDING COMMISSION DECLARATORY STATEMENT DCA05–DEC–219

TYPICAL ANCHORS: SEE ELEV. FOR SPACING

ANCHORS WITHOUT HEAD RECEPTOR

TYPE 'A' 1/4" DIA. ULTRACON BY 'ELCO' (Fu=177 KSI, Fy=155 KSI)
INTO 2BY WOOD BUCKS OR WOOD STRUCTURES
1–3/8" MIN. PENETRATION INTO WOOD

THRU 1BY BUCKS INTO CONC. OR MASONRY
1–1/4" MIN. EMBED INTO CONC. OR MASONRY

TYPE 'B' 1/4" DIA. ULTRACON BY 'ELCO' (Fu=177 KSI, Fy=155 KSI)
DIRECTLY INTO CONC. OR MASONRY
1–1/4" MIN. EMBED INTO CONC. OR MASONRY

TYPE 'F' #14 SMS OR SELF DRILLING SCREWS (GRADE 2 CRS)
INTO MIAMI–DADE COUNTY APPROVED MULLIONS (MIN. THK. = 1/8")

INTO METAL STRUCTURES
STEEL : 12 GA. MIN. (Fy = 36 KSI MIN.)
ALUMINUM : 1/8" THK. MIN. (6063–T5 MIN.)
(STEEL IN CONTACT WITH ALUMINUM TO BE PLATED OR PAINTED)

TYPICAL EDGE DISTANCE
INTO CONCRETE AND MASONRY = 2–1/2" MIN.
INTO WOOD STRUCTURE = 1" MIN.
INTO METAL STRUCTURE = 3/4" MIN.

CONCRETE AT HEAD, SILL OR JAMBS f'c = 3000 PSI MIN.
C–90 HOLLOW/FILLED BLOCK AT JAMBS f'm = 2000 PSI MIN.

DOORS W/O HEAD RECEPTOR
CLUSTER OF 6 ANCHORS AT STILE ENDS AT HEAD & SILL

Engr: JAVAD AHMAD
CIVIL
FLA. PE # 70592
C.A.N. 3538
APR 18 2012

AL-FAROOQ CORPORATION
ENGINEERS & PRODUCT DEVELOPMENT
1235 S.W. 87 AVE
MIAMI, FLORIDA 33174
TEL (305) 264-8100 FAX. (305) 262-6978
COMP–ANL\W02–87TMW

SERIES–350 ALUM. SLIDING GLASS DOOR (L.M.I.)

T.M. WINDOWS LLC.
601 N.W. 12TH AVE.
POMPANO BEACH, FL. 33069
TEL. (954) 781–4430 FAX. (954) 781–5078

revisions:

no	date	by	description
A	08.01.05		GLASS TYPE 'E' ADDED
B	04.15.08		GENERAL REVISION
C	08.28.08		REV. PER BCCO COMMENTS
D	09.12.08		NO CHANGE THIS SHEET
E	03.13.12		UPDATED TO 2010 FBC

date: 09–25–02
scale: 1/2" = 1"
dr. by: HAMID
chk. by:

drawing no.
W02–87

DESIGN LOAD CAPACITY – PSF
DOORS WITH HEAD RECEPTOR

LIGHT REINFORCING
SEE SHEET 5 FOR DETAILS

PANEL WIDTH INCHES	DOOR HEIGHT INCHES	ANCHORS TYPE 'C'		ANCHORS TYPE 'D'		ANCHORS TYPE 'E'	
		EXT.(+)	INT.(–)	EXT.(+)	INT.(–)	EXT.(+)	INT.(–)
24	80	75.0	75.0	75.0	75.0	75.0	75.0
30		75.0	75.0	75.0	75.0	75.0	75.0
36		75.0	75.0	75.0	75.0	75.0	75.0
42		75.0	71.4	75.0	71.4	75.0	71.4
48		75.0	65.8	75.0	65.8	75.0	65.8
54		75.0	61.8	75.0	61.8	75.0	61.8
24	84	75.0	75.0	75.0	75.0	75.0	75.0
30		75.0	75.0	75.0	75.0	75.0	75.0
36		75.0	74.5	75.0	74.5	75.0	74.5
42		75.0	66.9	75.0	66.9	75.0	66.9
48		75.0	61.5	75.0	61.5	75.0	61.5
54		74.8	57.5	74.8	57.5	74.8	57.5
24	90	75.0	75.0	75.0	75.0	75.0	75.0
30		75.0	75.0	75.0	75.0	75.0	75.0
36		75.0	68.3	75.0	68.3	75.0	68.3
42		75.0	61.1	75.0	61.1	75.0	61.1
48		72.6	55.9	72.6	55.9	72.6	55.9
24	96	75.0	75.0	75.0	75.0	75.0	75.0
30		75.0	72.8	75.0	72.8	75.0	72.8
36		75.0	63.0	75.0	63.0	75.0	63.0
42		73.0	56.2	73.0	56.2	73.0	56.2
48		66.6	51.2	66.6	51.2	66.6	51.2
24	96–1/2	75.0	75.0	75.0	75.0	75.0	75.0
30		75.0	72.4	75.0	72.4	75.0	72.4
36		75.0	62.6	75.0	62.6	75.0	62.6
42		72.6	55.8	72.6	55.8	72.6	55.8
48		66.1	50.9	66.1	50.9	66.1	50.9

DESIGN LOAD CAPACITY – PSF
DOORS WITH HEAD RECEPTOR

MEDIUM REINFORCING
SEE SHEET 5 FOR DETAILS

PANEL WIDTH INCHES	DOOR HEIGHT INCHES	ANCHORS TYPE 'C'		ANCHORS TYPE 'D'		ANCHORS TYPE 'E'	
		EXT.(+)	INT.(–)	EXT.(+)	INT.(–)	EXT.(+)	INT.(–)
24	84	100.0	120.0	100.0	120.0	100.0	120.0
30		100.0	120.0	100.0	120.0	100.0	120.0
36		100.0	120.0	100.0	120.0	100.0	120.0
42		100.0	120.0	100.0	120.0	100.0	120.0
48		100.0	120.0	100.0	120.0	100.0	120.0
54		100.0	120.0	100.0	120.0	100.0	120.0
60		100.0	120.0	100.0	120.0	100.0	120.0
24	90	100.0	120.0	100.0	120.0	100.0	120.0
30		100.0	120.0	100.0	120.0	100.0	120.0
36		100.0	120.0	100.0	120.0	100.0	120.0
42		100.0	120.0	100.0	120.0	100.0	120.0
48		100.0	120.0	100.0	120.0	100.0	120.0
54		100.0	120.0	100.0	120.0	100.0	120.0
24	96	100.0	120.0	100.0	120.0	100.0	120.0
30		100.0	120.0	100.0	120.0	100.0	120.0
36		100.0	120.0	100.0	120.0	100.0	120.0
42		100.0	120.0	100.0	120.0	100.0	120.0
48		100.0	119.0	100.0	119.0	100.0	119.0
54		100.0	110.3	100.0	110.3	100.0	110.3
24	102	100.0	120.0	100.0	120.0	100.0	120.0
30		100.0	120.0	100.0	120.0	100.0	120.0
36		100.0	120.0	100.0	120.0	100.0	120.0
42		100.0	120.0	100.0	120.0	100.0	120.0
48		100.0	109.8	100.0	109.8	100.0	109.8
24	108	100.0	120.0	100.0	120.0	100.0	120.0
30		100.0	120.0	100.0	120.0	100.0	120.0
36		100.0	120.0	100.0	120.0	100.0	120.0
42		100.0	112.2	100.0	112.2	100.0	112.2
48		100.0	101.7	100.0	101.7	100.0	101.7

DESIGN LOAD CAPACITY – PSF
DOORS WITH HEAD RECEPTOR

HEAVY REINFORCING
SEE SHEET 5 FOR DETAILS

PANEL WIDTH INCHES	DOOR HEIGHT INCHES	ANCHORS TYPE 'C'		ANCHORS TYPE 'D'		ANCHORS TYPE 'E'	
		EXT.(+)	INT.(–)	EXT.(+)	INT.(–)	EXT.(+)	INT.(–)
24	84	100.0	120.0	100.0	120.0	100.0	120.0
30		100.0	120.0	100.0	120.0	100.0	120.0
36		100.0	120.0	100.0	120.0	100.0	120.0
42		100.0	120.0	100.0	120.0	100.0	120.0
48		100.0	120.0	100.0	120.0	100.0	120.0
54		100.0	120.0	100.0	120.0	100.0	120.0
60		100.0	120.0	100.0	120.0	100.0	120.0
24	90	100.0	120.0	100.0	120.0	100.0	120.0
30		100.0	120.0	100.0	120.0	100.0	120.0
36		100.0	120.0	100.0	120.0	100.0	120.0
42		100.0	120.0	100.0	120.0	100.0	120.0
48		100.0	120.0	100.0	120.0	100.0	120.0
54		100.0	120.0	100.0	120.0	100.0	120.0
60		100.0	120.0	100.0	120.0	100.0	120.0
24	96	100.0	120.0	100.0	120.0	100.0	120.0
30		100.0	120.0	100.0	120.0	100.0	120.0
36		100.0	120.0	100.0	120.0	100.0	120.0
42		100.0	120.0	100.0	120.0	100.0	120.0
48		100.0	120.0	100.0	120.0	100.0	120.0
54		100.0	120.0	100.0	120.0	100.0	120.0
60		100.0	120.0	100.0	120.0	100.0	120.0
24	102	100.0	120.0	100.0	120.0	100.0	120.0
30		100.0	120.0	100.0	120.0	100.0	120.0
36		100.0	120.0	100.0	120.0	100.0	120.0
42		100.0	120.0	100.0	120.0	100.0	120.0
48		100.0	120.0	100.0	120.0	100.0	120.0
54		100.0	118.0	100.0	120.0	100.0	120.0
24	108	100.0	120.0	100.0	120.0	100.0	120.0
30		100.0	120.0	100.0	120.0	100.0	120.0
36		100.0	120.0	100.0	120.0	100.0	120.0
42		100.0	120.0	100.0	120.0	100.0	120.0
48		100.0	118.6	100.0	120.0	100.0	120.0
54		100.0	109.3	100.0	120.0	100.0	120.0
24	114	100.0	120.0	100.0	120.0	100.0	120.0
30		100.0	120.0	100.0	120.0	100.0	120.0
36		100.0	120.0	100.0	120.0	100.0	120.0
42		100.0	120.0	100.0	120.0	100.0	120.0
48		100.0	110.7	100.0	120.0	100.0	120.0
24	120	100.0	120.0	100.0	120.0	100.0	120.0
30		100.0	120.0	100.0	120.0	100.0	120.0
36		100.0	120.0	100.0	120.0	100.0	120.0
42		100.0	115.0	100.0	120.0	100.0	120.0
48		100.0	103.8	100.0	120.0	100.0	120.0

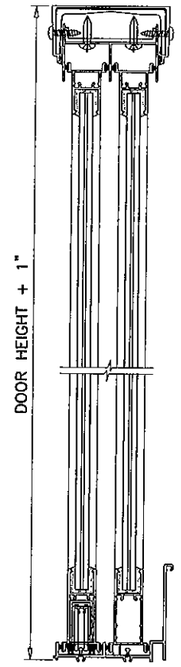

CHARTS AT LEFT ARE FOR DOOR HEIGHTS WITHOUT HEAD RECEPTOR.
DOORS USING HEAD RECEPTOR MAY BE 1" HIGHER THAN SHOWN (SEE SKETCH)

PRODUCT REVISED
as complying with the Florida Building Code
Acceptance No 12-0410.15
Expiration Date 01/23/2013
By
Miami-Dade Product Control

NOTE:
GLASS CAPACITIES ON THIS SHEET ARE BASED ON ASTM E1300–04 (3 SEC. GUSTS) AND FLORIDA BUILDING COMMISSION DECLARATORY STATEMENT DCA05–DEC–219

ALL EXTERIOR(+) LOADS SHOWN ON THIS SHEET ARE FOR DOORS USING FRAME SILL '4A' & '4B'
FOR DOORS USING FRAME SILL '4' LIMIT EXT.(+) LOADS TO 90.0 PSF.

TYPICAL ANCHORS: SEE ELEV. FOR SPACING

ANCHORS WITHOUT HEAD RECEPTOR

TYPE 'C' 1/4" DIA. ULTRACON BY 'ELCO' (Fu=177 KSI, Fy=155 KSI)
INTO 2BY WOOD BUCKS OR WOOD STRUCTURES
1–3/8" MIN. PENETRATION INTO WOOD

THRU 1BY BUCKS INTO CONC. OR MASONRY
1–1/4" MIN. EMBED INTO CONC. OR MASONRY

TYPE 'D' 1/4" DIA. ULTRACON BY 'ELCO' (Fu=177 KSI, Fy=155 KSI)
DIRECTLY INTO CONC. OR MASONRY
1–1/4" MIN. EMBED INTO CONC. OR MASONRY

TYPE 'E' #14 SMS OR SELF DRILLING SCREWS (GRADE 2 CRS)
INTO MIAMI–DADE COUNTY APPROVED MULLIONS (MIN. THK. = 1/8")

INTO METAL STRUCTURES
STEEL : 12 GA. MIN. (Fy = 36 KSI MIN.)
ALUMINUM : 1/8" THK. MIN. (6063–T5 MIN.)
(STEEL IN CONTACT WITH ALUMINUM TO BE PLATED OR PAINTED)

TYPICAL EDGE DISTANCE
INTO CONCRETE AND MASONRY = 2–1/2" MIN.
INTO WOOD STRUCTURE = 1" MIN.
INTO METAL STRUCTURE = 3/4" MIN.

CONCRETE AT HEAD, SILL OR JAMBS f'c = 3000 PSI MIN.
C–90 HOLLOW/FILLED BLOCK AT JAMBS f'm = 2000 PSI MIN.

DOORS WITH HEAD RECEPTOR
CLUSTER OF 8 ANCHORS AT STILE ENDS AT HEAD
CLUSTER OF 6 ANCHORS AT STILE ENDS AT SILL

Engr: JAVAD AHMAD
CIVIL
FLA. PE # 70592
C.A.N. 3538

APR 18 2012

AL-FAROOQ CORPORATION
ENGINEERS & PRODUCT DEVELOPMENT
1235 S.W. 87 AVE
MIAMI, FLORIDA 33174
TEL. (305) 264-8100 FAX. (305) 262-6978
COMP–ANL\W02–87TMW

SERIES–350 ALUM. SLIDING GLASS DOOR (L.M.I.)

T.M. WINDOWS LLC.
601 N.W. 12TH AVE.
POMPANO BEACH, FL. 33069
TEL. (954) 781–4430 FAX. (954) 781–5078

revisions:

no	date	by	description
B	04.15.08		GENERAL REVISION
C	08.28.08		REV. PER BCCO COMMENTS
D	09.12.08		NO CHANGE THIS SHEET
E	03.13.12		UPDATED TO 2010 FBC

date: 09–25–02
scale: 1/2" = 1"
dr. by: HAMID
chk. by:

drawing no.
W02–87

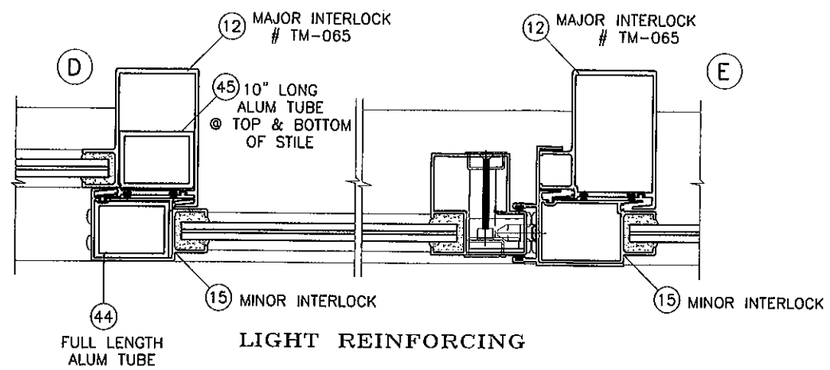

LIGHT REINFORCING

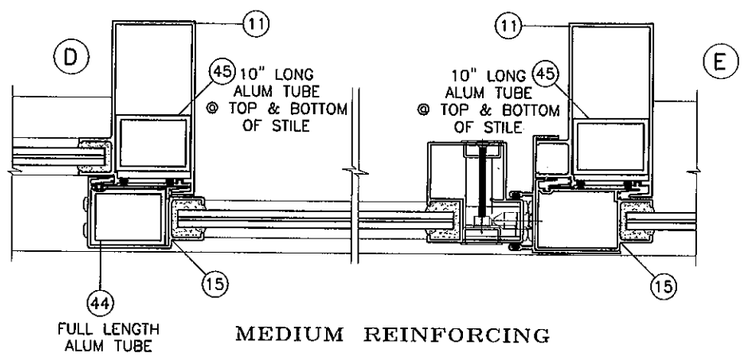

MEDIUM REINFORCING

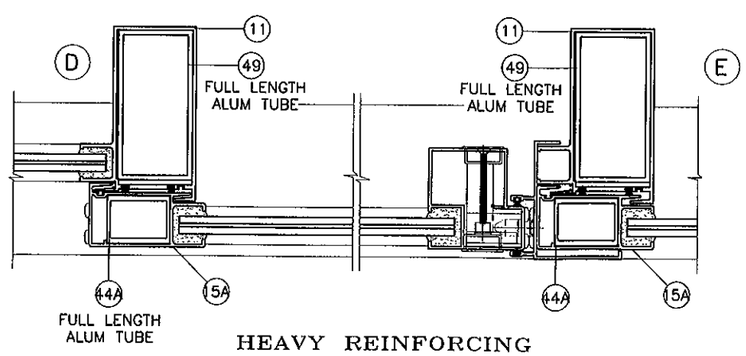

HEAVY REINFORCING

PRODUCT REVISED
as complying with the Florida
Building Code
Acceptance No 12-0410.15
Expiration Date 01/23/2013
By
Miami Dade Product Control

Engr: JAVAD AHMAD
CIVIL
FLA. PE # 70592
C.A.N. 3538
APR 18 2012

AL-FAROOQ CORPORATION
ENGINEERS & PRODUCT DEVELOPMENT
1235 S.W. 87 AVE
MIAMI, FLORIDA 33174
TEL. (305) 264-8100 FAX. (305) 262-6978
COMP-ANL\W02-87TMW

SERIES-350 ALUM. SLIDING GLASS DOOR (L.M.I.)

T.M. WINDOWS LLC.
601 N.W. 12TH AVE.
POMPANO BEACH, FL. 33069
TEL. (954) 781-4430 FAX. (954) 781-5078

revisions:

no	date	by	description
A	08.01.05		GLASS TYPE 'E' ADDED
B	04.15.08		GENERAL REVISION
C	06.28.08		REV. PER BCCO COMMENTS
D	09.12.08		NO CHANGE THIS SHEET
E	03.13.12		NO CHANGE THIS SHEET

date: 09-25-02
scale: 1/4" = 1"
dr. by: HAMID
chk. by:

drawing no.
W02-87

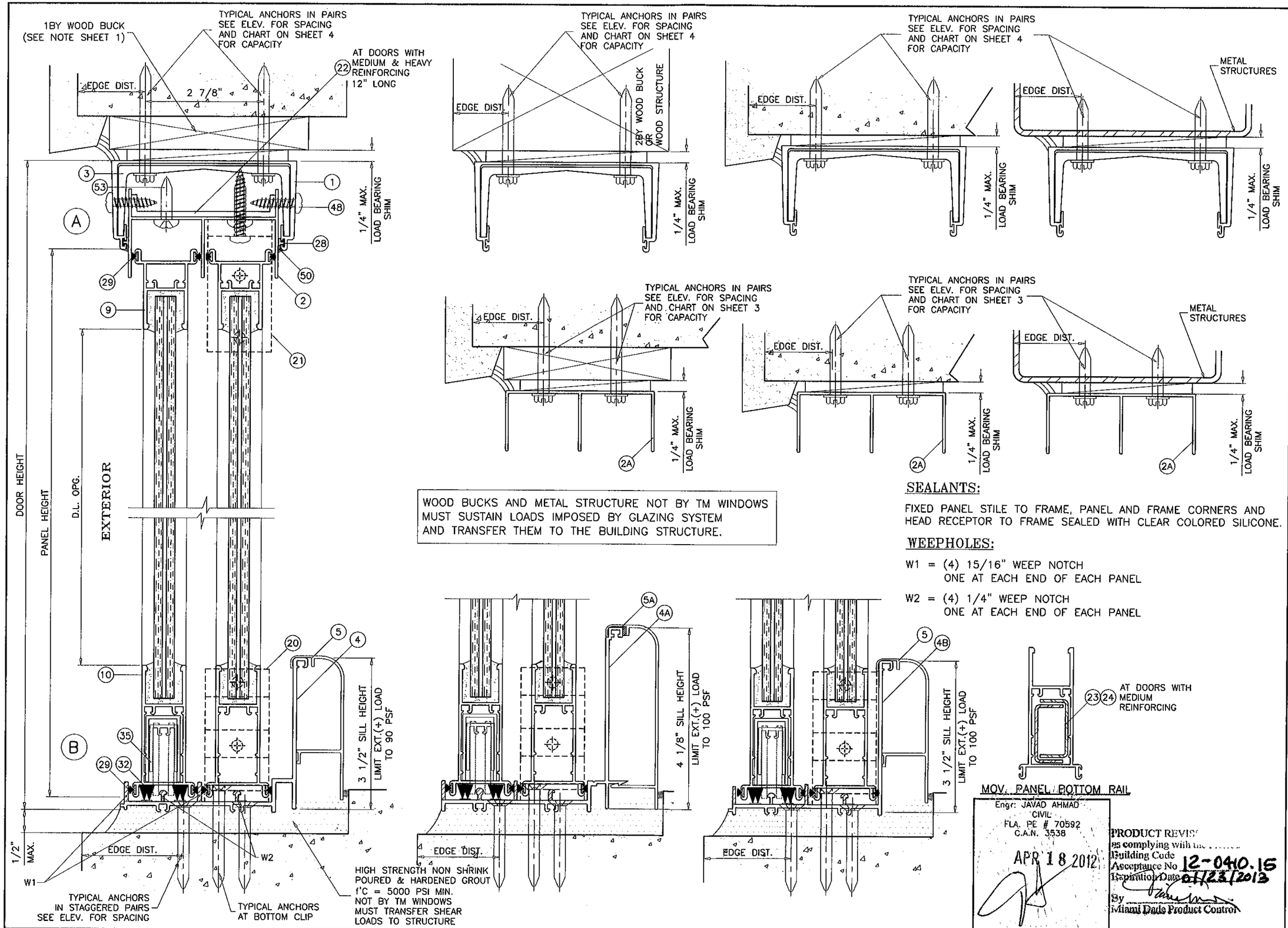

WOOD BUCKS AND METAL STRUCTURE NOT BY TM WINDOWS MUST SUSTAIN LOADS IMPOSED BY GLAZING SYSTEM AND TRANSFER THEM TO THE BUILDING STRUCTURE.

SEALANTS:

FIXED PANEL STILE TO FRAME, PANEL AND FRAME CORNERS AND HEAD RECEPTOR TO FRAME SEALED WITH CLEAR COLORED SILICONE.

WEEPHOLES:

W1 = (4) 15/16" WEEP NOTCH
ONE AT EACH END OF EACH PANEL

W2 = (4) 1/4" WEEP NOTCH
ONE AT EACH END OF EACH PANEL

Engr: JAVAD AHMAD
CIVIL
FLA. PE # 70592
C.A.N. 3538
APR 18 2012

PRODUCT REVIS
es complying with the
Building Code
Acceptance No. 12-0410.15
Expiration Date 01/23/2013
By
Miami Dade Product Control

AL-FAROOQ CORPORATION
ENGINEERS & PRODUCT DEVELOPMENT
1235 S.W. 87 AVE
MIAMI, FLORIDA 33174
TEL. (305) 264-8100 FAX. (305) 262-6978
COMP-ANL\W02-87TMW

SERIES-350 ALUM. SLIDING GLASS DOOR (L.M.I.)

T.M. WINDOWS LLC.
601 N.W. 12TH AVE.
POMPANO BEACH, FL. 33069
TEL. (954) 781-4430 FAX. (954) 781-5078

revisions:

no	date	by	description
A	08.01.05		ANCHORS SPACING ADDED
B	04.15.08		GENERAL REVISION
C	08.28.08		REV. PER BCCO COMMENTS
D	09.12.08		NO CHANGE THIS SHEET
E	03.13.12		UPDATED TO 2010 FBC

date: 09-25-02
scale: 1/2" = 1"
dr. by: HAMID
chk. by:

drawing no.
W02-87

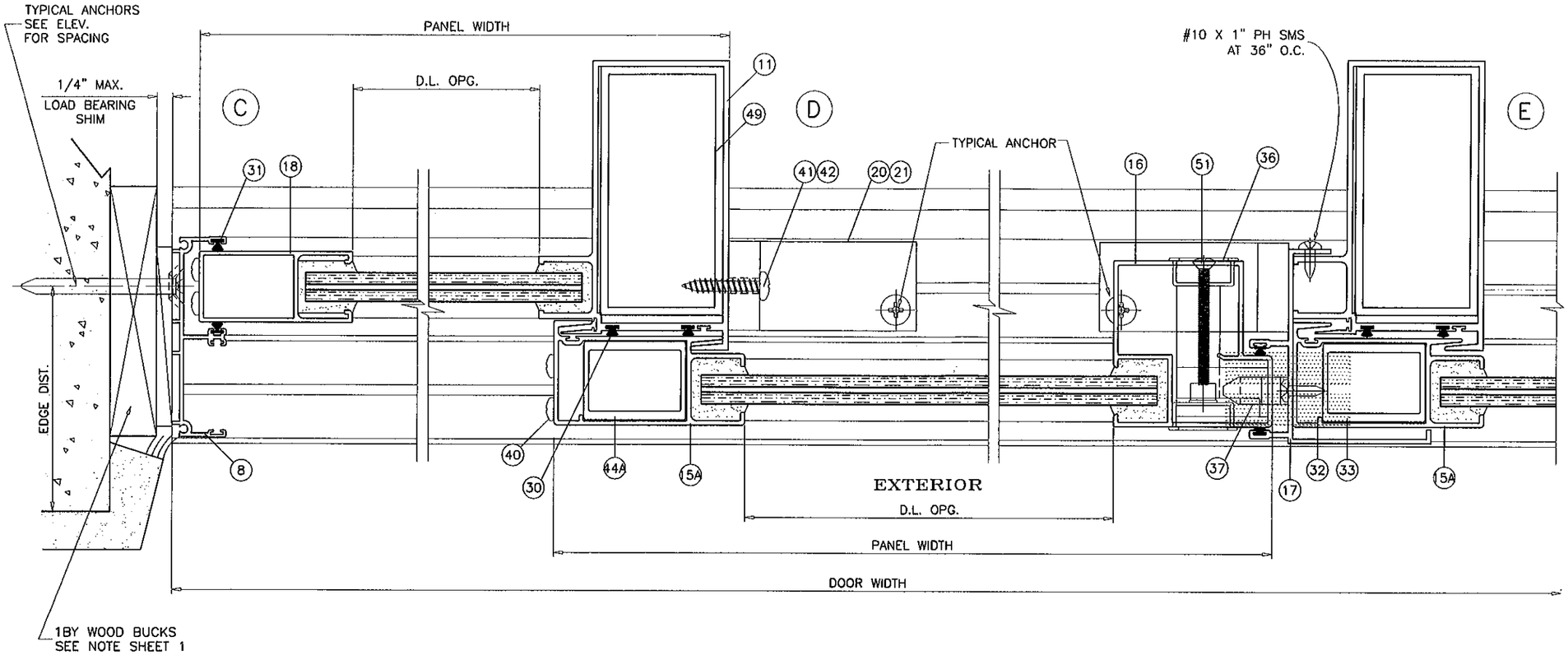

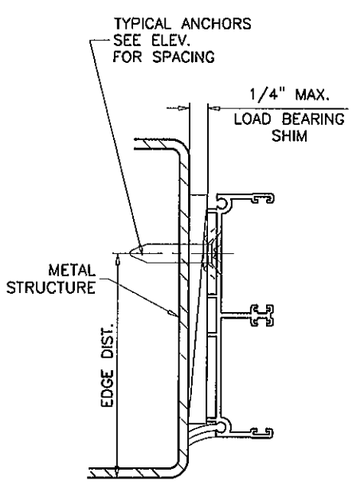

ATTACHMENT TO METAL STRUCTURES STEEL OR ALUMINUM

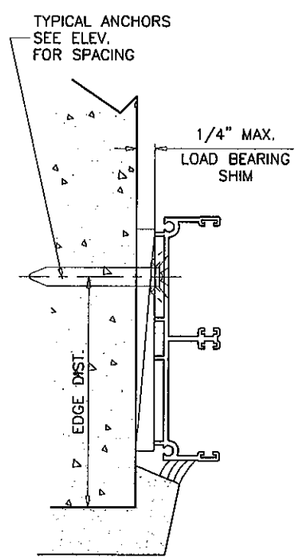

ATTACHMENT TO CONCRETE OR CONC. BLOCK

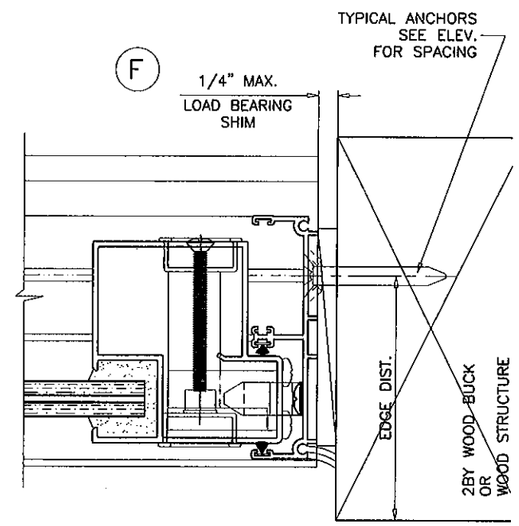

PRODUCT REVISED
as complying with the Florida
Building Code
Acceptance No 12-0410.15
Expiration Date 01/23/2013
By
Miami Dade Product Control

Engr: JAVAD AHMAD
CIVIL
FLA. PE # 70592
C.A.N. 3538
APR 18 2012

AL-FAROOQ CORPORATION
ENGINEERS & PRODUCT DEVELOPMENT
1235 S.W. 87 AVE
MIAMI, FLORIDA 33174
TEL. (305) 264-8100 FAX. (305) 262-6978
COMP-ANL\W02-87TMW

SERIES-350 ALUM. SLIDING GLASS DOOR (L.M.I.)

T.M. WINDOWS LLC.
601 N.W. 12TH AVE.
POMPANO BEACH, FL. 33069
TEL. (954) 781-4430 FAX. (954) 781-5078

revisions:

no	date	by	description
A	08.01.05		NO CHANGE THIS SHEET
B	04.15.08		GENERAL REVISION
C	08.28.08		REV. PER BCCO COMMENTS
D	09.12.08		NO CHANGE THIS SHEET
E	03.13.12		UPDATED TO 2010 FBC

date: 09-25-02
scale: 1/2" = 1"
dr. by: HAMID
chk. by:

drawing no.
W02-87

sheet 7 of 10

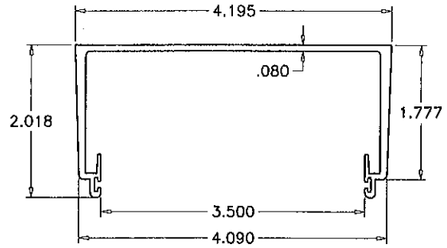

1 HEAD RECEPTOR
GW 37654

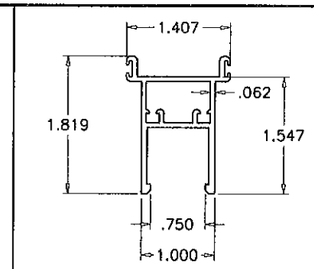

9 PANEL TOP RAIL
GW 37632

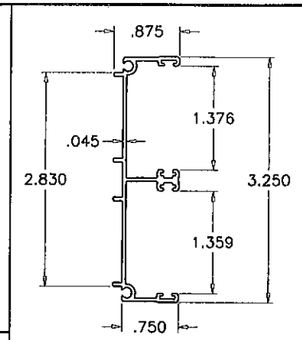

8 DOOR FRAME JAMB
GW 34977

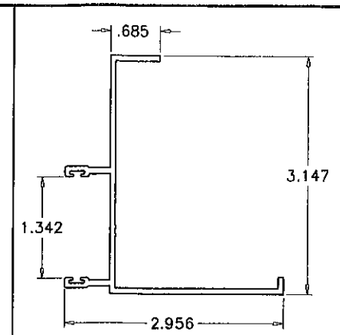

STILE ADAPTER
GW 37629

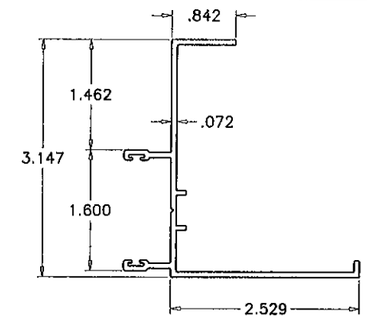

STILE ADAPTER
TM-085A

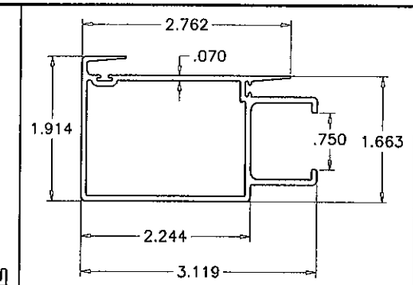

15 MINOR INTERLOCK
GW 37625

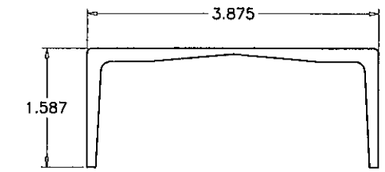

3 3A HEAD REINFORCING CHANNEL
GW 37655

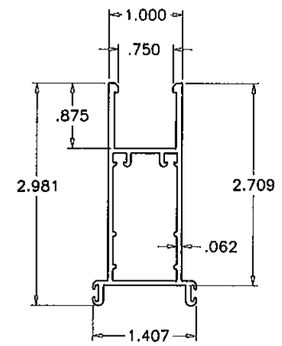

10 PANEL BOTTOM RAIL
GW 37624

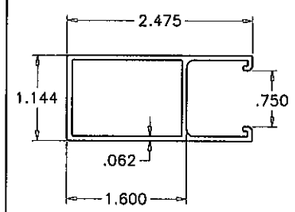

18 LOCK STILE
GW 37637

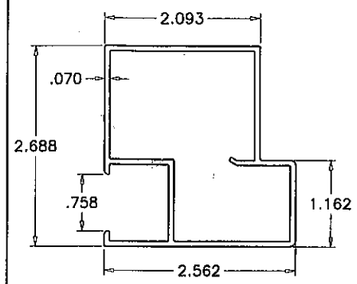

16 MALE BUTT STILE
GW 37623

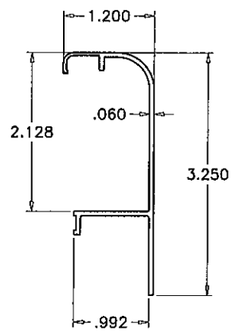

5 SILL COVER
TM-095

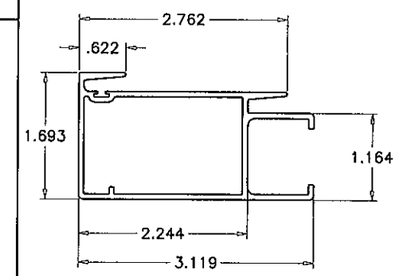

15A MINOR INTERLOCK
TM-106

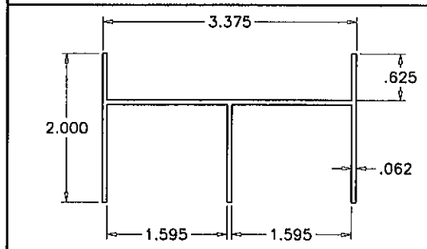

2 FRAME HEAD
GW 30710

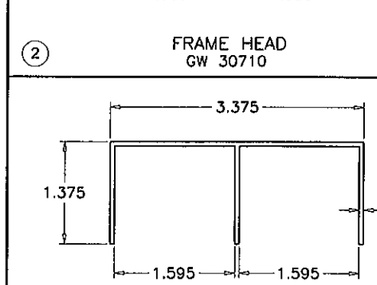

2A FRAME HEAD (OPTIONAL)
GW 32096

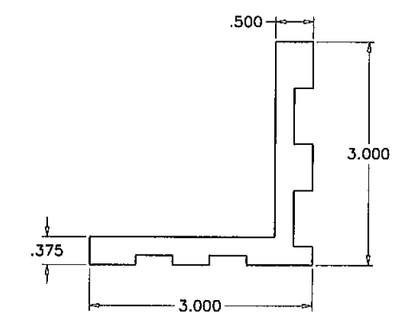

20 21 FIX. PANEL CLIP
GW 37743

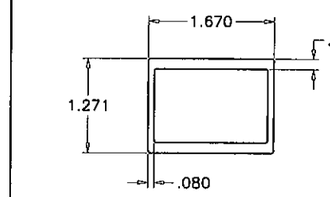

44A MINOR INTERLOCK REINFORCEMENT
TM-107
LENGTH = PANEL HT. - 4.5"

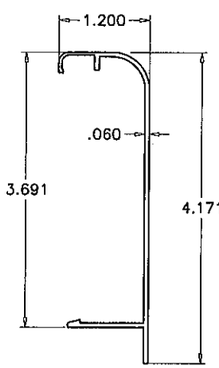

5A SILL COVER
TM-074

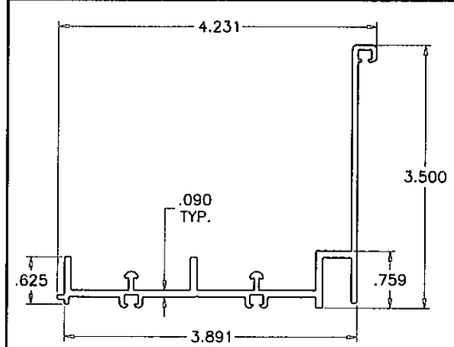

4 FRAME SILL
GW 37557

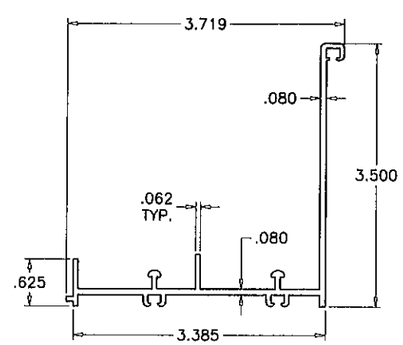

4B FRAME SILL
TM-177

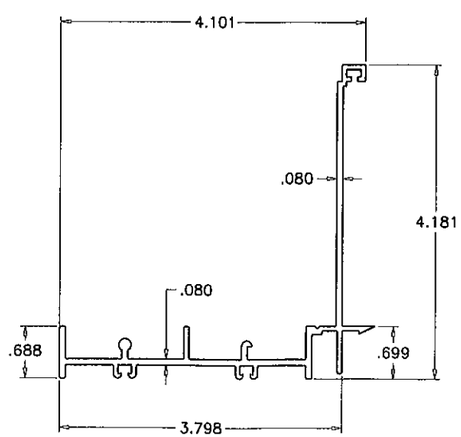

4A FRAME SILL (OPTIONAL)
TM-067

PRODUCT REVISED
as complying with the Florida
Building Code
Acceptance No 12-0410.15
Expiration Date 01/23/2013
By
Miami Dade Product Control

Engr: JAVAD, AHMAD
CIVIL
FLA PE # 70592
C.A.N. 3538
APR 18 2012

AL-FAROOQ CORPORATION
ENGINEERS & PRODUCT DEVELOPMENT
1235 S.W. 87 AVE
MIAMI, FLORIDA 33174
TEL. (305) 264-8100 FAX. (305) 262-6978
COMP-ANL\W02-87TMW

SERIES-350 ALUM. SLIDING GLASS DOOR (L.M.I.)

T.M. WINDOWS LLC.
601 N.W. 12TH AVE.
POMPANO BEACH, FL. 33069
TEL. (954) 781-4430 FAX. (954) 781-5078

revisions:

no	date	by	description
A	08.01.05		NO CHANGE THIS SHEET
B	04.15.08		GENERAL REVISION
C	08.28.08		NO CHANGE THIS SHEET
D	09.12.08		NO CHANGE THIS SHEET
E	03.13.12		NO CHANGE THIS SHEET

date: 09-25-02
scale: 1/2" = 1"
dr. by: HAMID
chk. by:

drawing no.
W02-87

sheet 8 of 10

ITEM	PART #	QUANTITY	DESCRIPTION	MATERIAL	MANF./SUPPLIER/REMARKS
1	GW 37654	1	HEAD RECEPTOR	ALUM-6063 T5	FRAME TOP
2	GW 30710	1	FRAME HEAD	ALUM-6063 T6	FRAME TOP
2A	GW 32096	1	FRAME HEAD (OPTIONAL)	ALUM-6063 T6	FRAME TOP
3	GW 37655	6	HEAD RECEPTOR REINFORCEMENT (6" LONG)	ALUM-6063 T5	AT HEAD ENDS & CENTER LINE OF PANELS
3A	GW 37655	3	HEAD RECEPTOR REINFORCEMENT (12" LONG)	ALUM-6063 T5	AT ASTRAGAL & INTERLOCK LOCATIONS
4	GW 37557	1	3 1/2" SILL	ALUM-6063 T6	FRAME BOTTOM
4A	TM-067	1	4 1/4" SILL	ALUM-6063 T6	FRAME BOTTOM
4B	TM-177	1	3 1/2" SILL	ALUM-6063 T6	FRAME BOTTOM
5	TM-095	1	DECORATIVE SILL COVER (OPTIONAL)	ALUM-6063 T5	FRAME BOTTOM
5A	TM-074	1	DECORATIVE SILL COVER (OPTIONAL)	ALUM-6063 T5	FRAME BOTTOM
8	GW 34977	2	FRAME JAMB (TWO TRACKS)	ALUM-6063 T6	FRAME SIDE
9	GW 37632	4	TOP RAIL	ALUM-6063 T6	PANEL TOP
10	GW 37624	4	BOTTOM RAIL	ALUM-6063 T6	PANEL BOTTOM
11	GW 37630	2	2"X4" MAJOR INTERLOCK	ALUM-6063 T6	PANEL SIDES
11A	GW 37630A	2	2"X4" MAJOR INTERLOCK	ALUM-6063 T6	PANEL SIDES
12	TM-065	2	2"X3" MAJOR INTERLOCK	ALUM-6063 T5	PANEL SIDES
15	GW 37625	2	MINOR INTERLOCK	ALUM-6063 T5	PANEL SIDES
15A	TM-106	2	MINOR INTERLOCK	ALUM-6063 T5	PANEL SIDES
16	GW 37623	1	MALE BUTT STILE	ALUM-6063 T6	PANEL ASTRAGAL
17	GW 37629	1	STILE ADAPTER	ALUM-6063 T5	PANEL ASTRAGAL
18	GW 37637	2	LOCK STILE	ALUM-6063 T6	PANEL SIDES
20	FXD 37743	2	BOTTOM CLIP (3 x 3 x 1/4 x 1 7/16" LG. ANGLE)	ALUMINUM	FRAME SILL
21	TP 37743	2	TOP CLIP (3 x 3 x 1/4 x 1 7/16" LG. ANGLE)	ALUMINUM	FRAME HEAD
22	–	3	3 1/4" X 1/2" X 1/8" X 12" LG. REINF. CHANNEL	ALUMINUM	ABOVE INTERLOCKS & ASTRAGAL STILES
23	–	1/MOV. PANEL	.820" X 1.435" X .060" THK. CHANNEL, FULL LENGTH	STEEL	IN BOTTOM RAIL
24	–	1/MOV. PANEL	.650" X 1.235" X .060" THK. CHANNEL, FULL LENGTH	STEEL	IN BOTTOM RAIL
28	WV-3033	AS REQ'D	BULB TYPE VINYL	VINYL	HEAD RECEPTOR
29	4020-PILE	SINGLE ROW	"ULTRAFAB" FIN SEAL WEATHERSTRIP	WOOL	TOP & BOTTOM RAILS
30	4037-PILE	2/ROWS	"ULTRAFAB" FIN SEAL WEATHERSTRIP	WOOL	INTERIOR INTERLOCKS STILES
31	4020-PILE	SINGLE ROW	"ULTRAFAB" FIN SEAL WEATHERSTRIP	WOOL	FRAME JAMB/ASTRAGAL
32	–	2	1/2" x 2" LONG SELF ADHESIVE PILE PAD	WOOL	AT FRAME SILL
33	–	1	7/8" x 3" LONG SELF ADHESIVE PILE PAD	WOOL	AT FRAME HEAD
35	TM-36205	2/ MOV. PANEL	TM TANDEM ROLLER ASSEMBLY	ALUMINUM/NYLON	BOTTOM ACTIVE PANELS
36	TM-32476	1/ MOV. DOOR	TM LATCH ASSEMBLY	ALUM/VINYL/STEEL	MALE ASTRAGAL
37	TM-32424	AS REQD.	TM KEEPER	ALUMINUM	FEMALE ASTRAGAL
38	–	2/ CORNER	#8 X 5/8" FH SMS – FRAME ASSEMBLY SCREWS	STEEL	–
39	–	2	#10 X 1/2" OH. SMS. – KEEPER INST. SCREW	STEEL	FEMALE ASTRAGAL
40	–	8/PANEL	#10 X 1" PH. SMS. – PANEL ASSEMBLY SCREW	STEEL	PANEL CORNERS
41	–	(2/CLIP)	#14 X 1-1/4" PH. SMS. – FIXED PANEL CLIP	STEEL	TOP/BOTTOM CLIPS/STILES
42	–	1/CLIP	#14 X 1-1/2" PH. SMS. –TOP FIXED CLIP	STEEL	HEAD TOP INTERLOCK
44	–	AS REQD.	1 1/2" x 2" x 1/8" REINF. TUBE, FULL LENGTH	ALUMINUM	AT EACH MINOR INTERLOCK
44A	TM-107	AS REQD.	1 1/4" x 1-5/8" REINF. TUBE, FULL LENGTH	ALUMINUM	AT EACH MINOR INTERLOCK
45	–	AS REQD.	1 1/2 x 2 x 1/8" REINF. TUBE, 10" LONG	ALUMINUM	–
48	–	6	#14 x 1" PH. SMS.	STEEL	AT 50" O.C. MAX. ABOVE INTERLOCKS
49	–	3	2 X 4 X 1/8" REINF. TUBE (LENGTH = PANEL HT. – 8")	ALUMINUM	MAJOR INTERLOCK/ASTRAGAL
50	–	AS REQ'D	SILICONE CAP	SILICONE	FRAME/HEAD RECEPTOR
51	–	2/LATCH	#10 X 2" OH. MS. – ASSEMBLY SCREW	STEEL	LATCH ASSEMBLY
53	–	4/CHANNEL	#14 X 1-1/2" PH. SMS.	STEEL	AT HEAD ALUM. CHANNEL

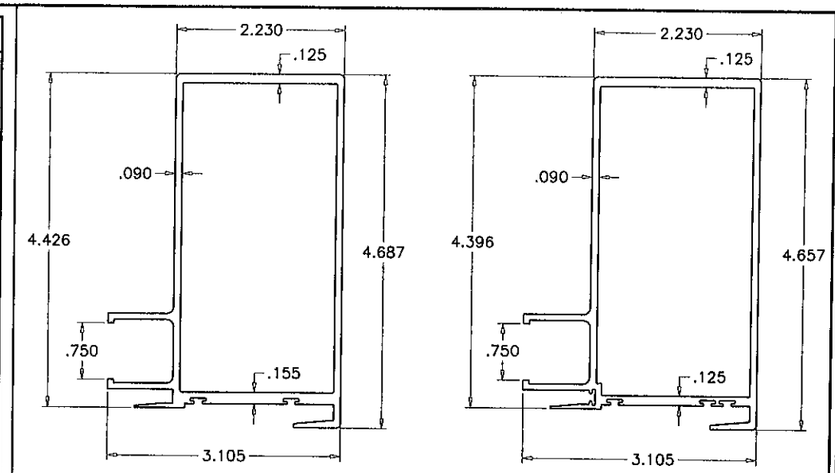

(11A) 2"x4" MAJOR INTERLOCK
GW 37630A (OPTIONAL)

(11) 2"x4" MAJOR INTERLOCK
GW 37630

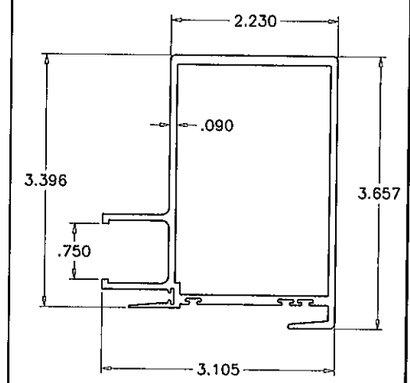

(12) 2"x3" MAJOR INTERLOCK
TM-065

LOCKS:

2 POINT FLUSH MOUNT HOOK LOCK AT MOVING PANEL LOCK STILE 42-1/2" FROM BOTTOM FASTENED WITH (2) #10 X 5/8" FH SMS. (2) SURFACE MOUNT ALUMINUM KEEPERS FACING LOCK AT 35-1/2" AND 50" FROM BOTTOM EACH FASTENED WITH (3) #12 X 2" FH SMS.

PRODUCT REVISED
as complying with the Florida
Building Code
Acceptance No 12-0410.15
Expiration Date 01/23/2013
By
Miami Dade Product Control

Engr: JAVAD AHMAD
CIVIL
FLA. PE # 70592
C.A.N. 3538

APR 1 8 2012

AL-FAROOQ CORPORATION
ENGINEERS & PRODUCT DEVELOPMENT
1235 S.W. 87 AVE
MIAMI, FLORIDA 33174
TEL. (305) 264-8100 FAX. (305) 262-6978
COMP-ANL\W02-877MW

SERIES-350 ALUM. SLIDING GLASS DOOR (L.M.I.)

T.M. WINDOWS LLC.
601 N.W. 12TH AVE.
POMPANO BEACH, FL. 33069
TEL. (954) 781-4430 FAX. (954) 781-5078

revisions:

no	date	by	description
A	08.01.05		NO CHANGE THIS SHEET
B	04.15.08		GENERAL REVISION
C	08.28.08		REV. PER BCCO COMMENTS
D	09.12.08		NO CHANGE THIS SHEET
E	03.13.12		NO CHANGE THIS SHEET

date: 09-25-02
scale: 1/2" = 1"
dr. by: HAMID
chk. by:

drawing no.
W02-87

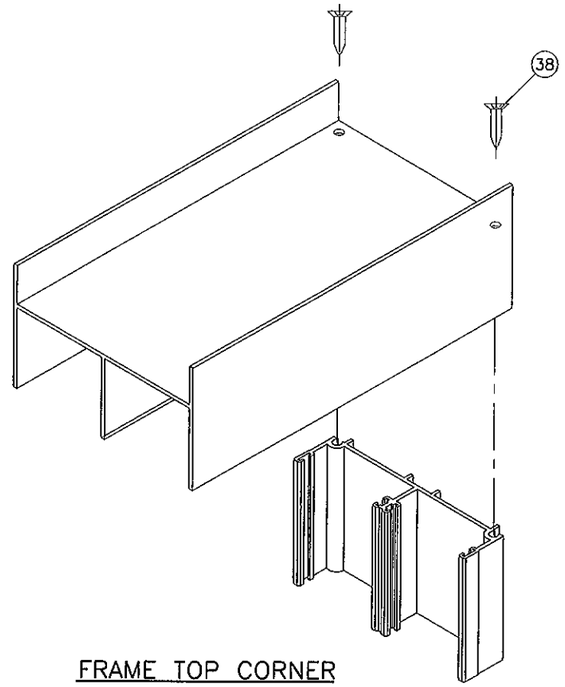

FRAME TOP CORNER

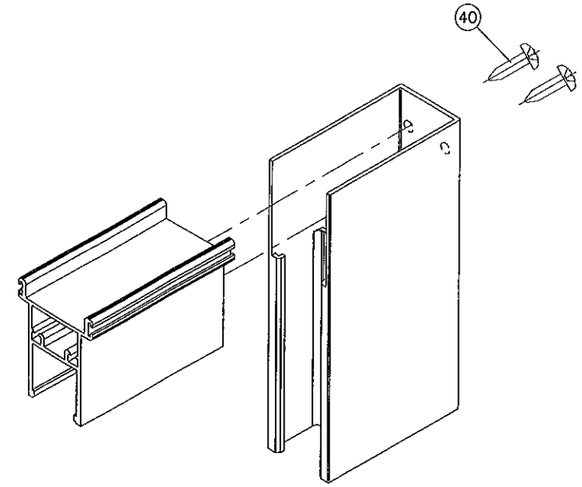

PANEL TOP CORNER

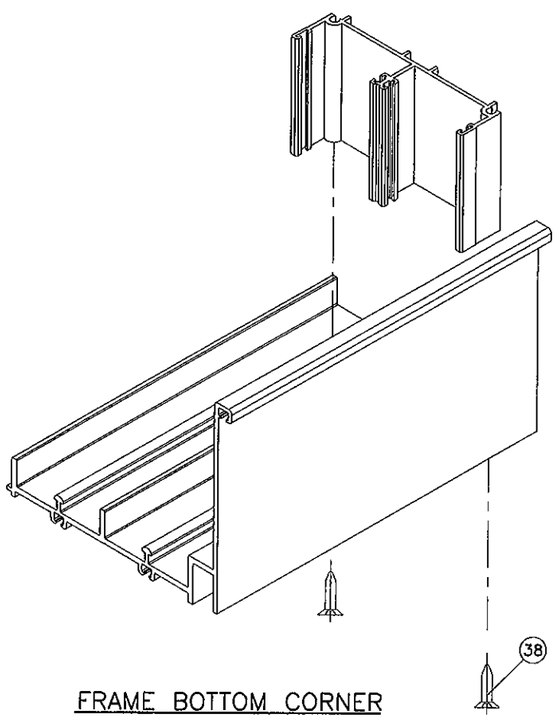

FRAME BOTTOM CORNER

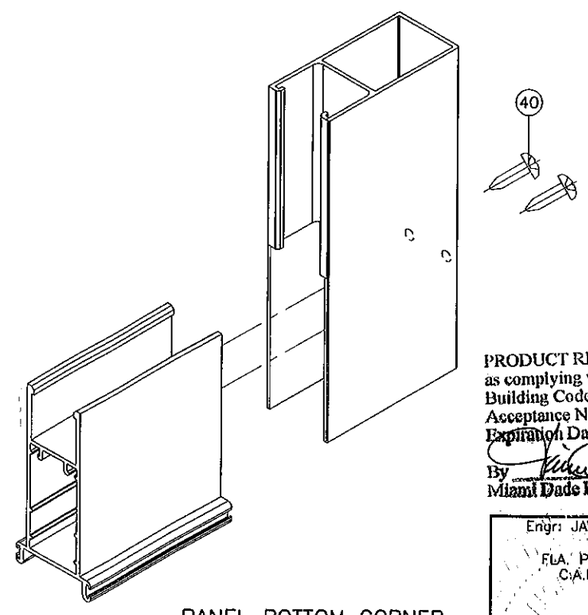

PANEL BOTTOM CORNER

PRODUCT REVISED
as complying with the Florida
Building Code
Acceptance No. 12-0410.15
Expiration Date 01/23/2013
By
Miami Dade Product Control

Engr: JAVAD AHMAD
CIVIL
FLA. PE # 70592
C.A.N. 3538

APR 18 2012

AL-FAROOQ CORPORATION
ENGINEERS & PRODUCT DEVELOPMENT
1235 S.W. 87 AVE
MIAMI, FLORIDA 33174
TEL. (305) 264-8100 FAX. (305) 262-6978
COMP-ANL\W02-87TMW

SERIES-350 ALUM. SLIDING GLASS DOOR (L.M.I.)

T.M. WINDOWS LLC.
601 N.W. 12TH AVE.
POMPANO BEACH, FL. 33069
TEL. (954) 781-4430 FAX. (954) 781-5078

revisions:

no	date	by	description
B	04.15.08		GENERAL REVISION
C	08.28.08		REV. PER BCCO COMMENTS
D	09.12.08		NO CHANGE THIS SHEET
E	03.13.12		NO CHANGE THIS SHEET

date: 09-25-02
scale: 1/2" = 1"
dr. by: HAMID
chk. by:

drawing no.
W02-87

sheet 10 of 10