MIAMI-DADE COUNTY
DEPARTMENT OF PERMITTING, ENVIRONMENT, AND REGULATORY AFFAIRS (PERA)
BOARD AND CODE ADMINISTRATION DIVISION

MIAMI–DADE COUNTY, FLORIDA
PRODUCT CONTROL SECTION
11805 SW 26 Street, Room 208
Miami, Florida 33175–2474
T (786) 315–2590 F (786) 315–2599
www.miamidade.gov/pera/

NOTICE OF ACCEPTANCE (NOA)

R. C. Aluminum Industries, Inc.
2805 NW 75th Ave
Miami, FL 33122

SCOPE:

This NOA is being issued under the applicable rules and regulations governing the use of construction materials. The documentation submitted has been reviewed and accepted by Miami–Dade County PERA–Product Control Section to be used in Miami–Dade County and other areas where allowed by the Authority Having Jurisdiction (AHJ).

This NOA shall not be valid after the expiration date stated below. The Miami–Dade County Product Control Section (In Miami–Dade County) and/or the AHJ (in areas other than Miami–Dade County) reserve the right to have this product or material tested for quality assurance purposes. If this product or material fails to perform in the accepted manner, the manufacturer will incur the expense of such testing and the AHJ may immediately revoke, modify, or suspend the use of such product or material within their jurisdiction. PERA reserves the right to revoke this acceptance, if it is determined by Miami–Dade County Product Control Section that this product or material fails to meet the requirements of the applicable building code.

This product is approved as described herein, and has been designed to comply with the Florida Building Code, including the High Velocity Hurricane Zone.

DESCRIPTION:

Series "RD45" Aluminum Outswing Entrance Door w/ wo Transom and Sidelites – L.M.I.

APPROVAL DOCUMENT: Drawing No. **W04–37**, titled "Series RD45 Alum. Entrance Door (L.M.I.)", sheets 1 through 10 of 10, dated 05/09/04, prepared by AL–Farooq Corporation, with latest revised "**E**" dated 03/21/12, signed and sealed by Javad Ahmad, P. E., bearing the Miami–Dade County Product Control Revision stamp with the Notice of Acceptance number and Expiration date by the Miami–Dade County Product Control Section.

MISSILE IMPACT RATING: Large and Small Missile Impact Resistant.

LABELING: Each unit shall bear a permanent label with the manufacturer's name or logo, city, state, series and following statement: "Miami–Dade County Product Control Approved" unless otherwise noted herein.

RENEWAL of this NOA shall be considered after a renewal application has been filed and there has been no change in the applicable building code negatively affecting the performance of this product.

TERMINATION of this NOA will occur after the expiration date or if there has been a revision or change in the materials, use, and/ or manufacture of the product or process. Misuse of this NOA as an endorsement of any product, for sales, advertising or any other purposes shall automatically terminate this NOA. Failure to comply with any section of this NOA shall be cause for termination and removal of NOA.

ADVERTISEMENT: The NOA number preceded by the words Miami–Dade County, Florida, and followed by the expiration date may be displayed in advertising literature. If any portion of the NOA is displayed, then it shall be done in its entirety.

INSPECTION: A copy of this entire NOA shall be provided to the user by the manufacturer or its distributors and shall be available for inspection at the job site at the request of the Building Official.

This NOA **revises NOA No. 09–0630.07** and consists of this page 1, evidence pages E–1 and E–2, as well as approval document mentioned above.

The submitted documentation was reviewed by **Jaime D. Gascon, P. E.**

MIAMI-DADE COUNTY APPROVED

J. Gascon
6/7/12

NOTICE OF ACCEPTANCE: EVIDENCE SUBMITTED

A. DRAWINGS

1. Manufacturer's die drawings and sections.
   (Submitted under previous NOA's No.'s 04–0608.03 and 08–0613.07)
2. Drawing No. **W04–37**, titled "Series RD45 Alum. Entrance Door (L.M.I.)", sheets 1 through 10 of 10, dated 05/09/04, prepared by AL–Farooq Corporation, with latest revised "**E**" dated 03/21/12, signed and sealed by Javad Ahmad, P. E.

B. TESTS

1. Test reports on: 1) Air Infiltration Test, per FBC, TAS 202–94
   2) Uniform Static Air Pressure Test, Loading per FBC TAS 202–94
   3) Water Resistance Test, per FBC, TAS 202–94
   4) Large Missile Impact Test per FBC, TAS 201–94
   5) Cyclic Wind Pressure Loading per FBC, TAS 203–94
   6) Forced Entry Test, Side–Hinged Door Systems, per FBC 2411.3.2.1, TAS 202–94 and per AAMA 1304–02

   along with marked–up drawings and installation diagram of aluminum outswing door, prepared by Fenestration Testing Laboratory, Inc., Test Reports No.'s:
   1. **FTL–5390**, dated 02/18/08, signed and sealed by Carlos S. Rionda, P. E. ***(Submitted under previous NOA No. 08–0613.07);***
   2. **FTL–4154**, **FTL–4155** and **FTL–4166**, dated 03/24/04, 03/30/04 and 03/31/04, all signed and sealed by Edmundo Largaespada, P. E.
      (Submitted under previous NOA No. 04–0608.03)

C. CALCULATIONS

1. Anchor verification calculations and structural analysis, complying with **FBC–2010**, prepared by AL–Farooq Corporation, dated 03/27/12, signed and sealed by Javad Ahmad, P. E.
2. **Glazing complies with ASTM E1300–04**

D. QUALITY ASSURANCE

1. Miami–Dade Department of Permitting, Environment, and Regulatory Affairs (PERA).

E. MATERIAL CERTIFICATIONS

1. Notice of Acceptance No. **11–0624.01** issued to E.I. DuPont DeNemours & Co., Inc. for their "**DuPont Butacite® PVB Interlayer**" dated 09/08/2011, expiring on 12/11/2016.

Jaime D. Gascon, P. E.
Product Control Section Supervisor
NOA No. 12–0410.18
Expiration Date: August 19, 2014
Approval Date: June 14, 2012

NOTICE OF ACCEPTANCE: EVIDENCE SUBMITTED

F. STATEMENTS

1. Statement letter of no financial interest, conformance and compliance with the **FBC–2010**, dated 03/06/12, signed and sealed by Javad Ahmad, P. E.
2. Laboratory compliance letters prepared by Fenestration Testing Laboratory, Inc., for Test Reports No.'s:
   - **I. FTL–5390**, dated 02/18/08, signed and sealed by Carlos S. Rionda, P. E. ***(Submitted under previous NOA No. 08–0613.07);***
   - **II. FTL–4154, FTL–4155** and **FTL–4166**, dated 03/24/04, 03/30/04 and 03/31/04, all signed and sealed by Edmundo Largaespada, P. E. ***(Submitted under previous NOA No. 04–0608.03)***
3. Proposals issued by Product Control:
   - **I.** No. **07–2426**, dated 05/08/07, signed by Ishaq Chanda, P. E. ***(Submitted under previous NOA No. 08–0613.07)***
   - **II.** Dated 07/18/06, signed by Jaime D. Gascon, P. E. ***(Submitted under previous NOA No. 08–0613.07)***
   - **III.** Dated 12/03/03, signed by Jaime D. Gascon, P. E. ***(Submitted under previous NOA No. 04–0608.03)***

G. OTHERS

1. Notice of Acceptance No. **09–0630.07**, issued to R.C. Aluminum Industries, Inc., for their Series "**RD45 Outswing Aluminum Entrance Door w/ wo transom & sidelites – L.M.I.**", approved on 08/05/09 and expiring on 08/19/14.

Jaime D. Gascon, P. E.
Product Control Section Supervisor
NOA No. 12–0410.18
Expiration Date: August 19, 2014
Approval Date: June 14, 2012

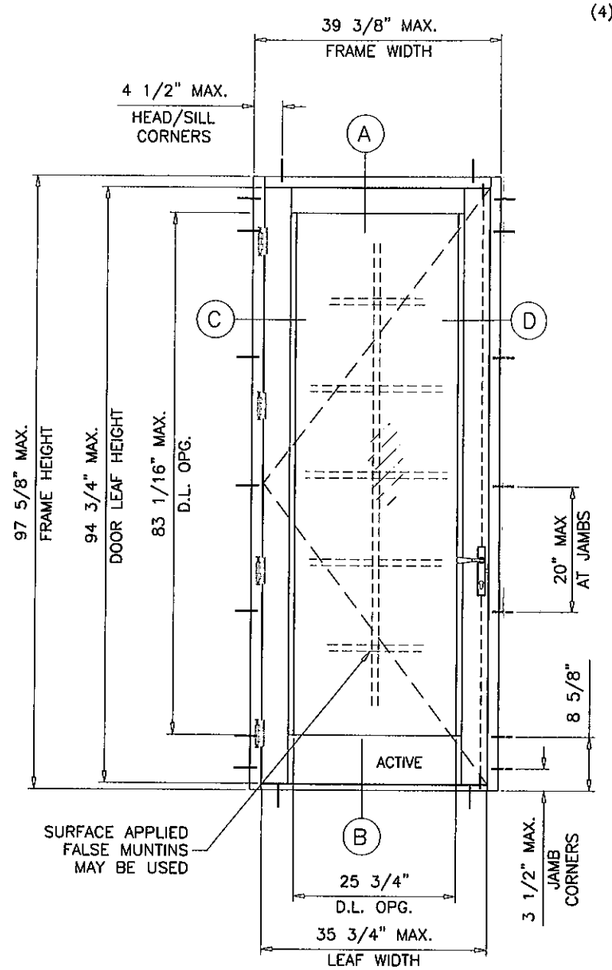

(X)

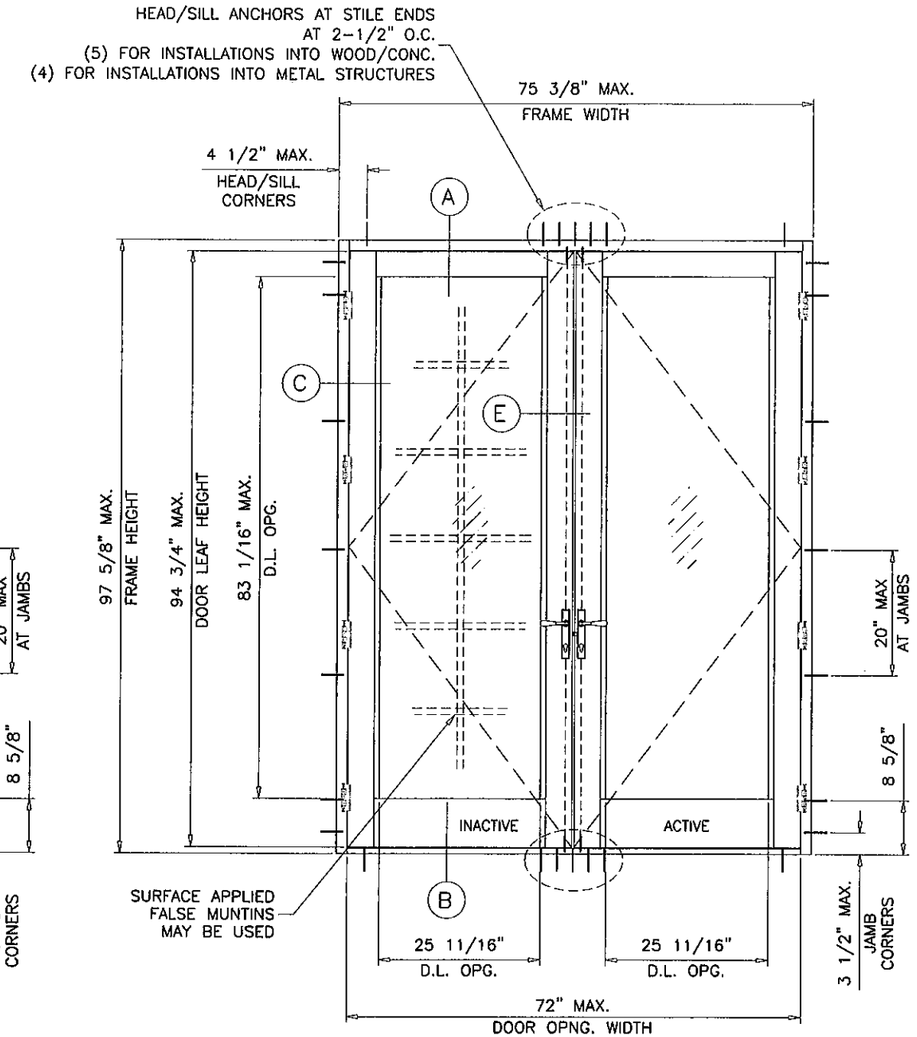

(XX)

SERIES RD45
ALUMINUM OUTSWING ENTRANCE DOOR

SINGLE (X) AND DOUBLE (XX) LEAF DOORS W/O TRANSOM SEE ABOVE.
SINGLE (O/X) AND DOUBLE (O/XX) LEAF DOORS WITH TRANSOMS SEE SHEET 2.
SINGLE AND DOUBLE LEAF DOORS WITH SIDELITES SEE SHEET 3.
LOWER VALUES FROM SIDELITE CAPACITY CHART OR DOOR CAPACITY WILL APPLY TO ENTIRE SYSTEM.

THIS PRODUCT HAS BEEN DESIGNED AND TESTED TO COMPLY WITH THE REQUIREMENTS OF THE FLORIDA BUILDING CODE INCLUDING HIGH VELOCITY HURRICANE ZONE (HVHZ).

1BY OR 2BY WOOD BUCKS BY OTHERS, MUST BE ANCHORED PROPERLY TO TRANSFER LOADS TO THE STRUCTURE.

ANCHORS SHALL BE AS LISTED, SPACED AS SHOWN ON DETAILS, ANCHORS EMBEDMENT TO BASE MATERIAL SHALL BE BEYOND WALL DRESSING OR STUCCO.

ANCHORING OR LOADING CONDITIONS NOT SHOWN IN THESE DETAILS ARE NOT PART OF THIS APPROVAL.

A LOAD DURATION INCREASE IS USED IN DESIGN OF ANCHORS INTO WOOD ONLY.

MATERIALS INCLUDING BUT NOT LIMITED TO STEEL/METAL SCREWS, THAT COME INTO CONTACT WITH OTHER DISSIMILAR MATERIALS SHALL MEET THE REQUIREMENTS OF THE FLORIDA BLDG. CODE SECTION 2003.8.4.

MAXIMUM DESIGN LOAD RATING	= + 80.0 PSF
(FOR SIZES SHOWN ABOVE OR SMALLER) AS ALLOWED BY FBC	− 80.0 PSF

PRODUCT REVISED
as complying with the Florida Building Code
Acceptance No 12-0410.18
Expiration Date 08/19/2014
By
Miami Dade Product Control

THESE DOORS ARE RATED FOR LARGE & SMALL MISSILE IMPACT. SHUTTERS ARE NOT REQUIRED.

NOTE:
GLASS CAPACITIES ON THIS SHEET ARE BASED ON ASTM E1300-04 (3 SEC. GUSTS) AND FLORIDA BUILDING COMMISSION DECLARATORY STATEMENT DCA05-DEC-219

Engr: JAVAD AHMAD
CIVIL
FLA. PE # 70592
C.A.N. 3538

MAR 27 2012

AL-FAROOQ CORPORATION
ENGINEERS & PRODUCT DEVELOPMENT
1235 S.W. 87 AVE
MIAMI, FLORIDA 33174
TEL. (305) 264-8100 FAX. (305) 262-6978

COMP-ANL\W04-37RC

SERIES RD45 ALUM ENTRANCE DOOR (L.M.I.)

R.C. ALUMINUM INDUSTRIES INC.
2805 N.W. 75 TH AVE.
MIAMI, FL. 33122
TEL. (305) 592-1515 FAX. (305) 592-2184

revisions:

no	date	by	description
A	07.09.04		REV. PER BCCO COMMENTS
B	05.14.08		GENERAL REVISION
C	07.09.08		REV. PER BCCO COMMENTS
D	05.05.09		ENGR. NAME REV.
E	03.21.12		UPDATED TO 2010 FBC

date: 05-09-04
scale: 1/2"=1'-0"
dr. by: HAMID
chk. by:

drawing no.
W04-37

DESIGN LOAD CAPACITY – PSF SINGLE OR DOUBLE ENTRANCE DOORS WITH TRANSOMS				
WIDTH–W1 INCHES	WIDTH–W2 INCHES	DOOR HEIGHT–A INCHES	GLASS TYPE 'A' EXT.(+)/INT.(–)	GLASS TYPE 'B' EXT.(+)/INT.(–)
63–3/8	24	81–5/8	80.0	80.0
	30		80.0	80.0
	37–5/8		80.0	80.0
	43–5/8		69.0	69.0
69–3/8	24		80.0	80.0
	30		80.0	80.0
	37–5/8		80.0	80.0
75–3/8	24		80.0	80.0
	30		80.0	80.0
	37–5/8		80.0	80.0
63–3/8	24	85–5/8	80.0	80.0
	30		80.0	80.0
	37–5/8		80.0	80.0
	43–5/8		69.0	69.0
69–3/8	24		80.0	80.0
	30		80.0	80.0
	37–5/8		80.0	80.0
75–3/8	24		80.0	80.0
	30		80.0	80.0
	37–5/8		80.0	80.0
63–3/8	24	91–5/8	80.0	80.0
	30		80.0	80.0
	37–5/8		80.0	80.0
	43–5/8		69.0	69.0
69–3/8	24		80.0	80.0
	30		80.0	80.0
	37–5/8		80.0	80.0
75–3/8	24		80.0	80.0
	30		80.0	80.0
	37–5/8		80.0	80.0
63–3/8	24	97–5/8	80.0	80.0
	30		80.0	80.0
	37–5/8		80.0	80.0
	43–5/8		69.0	69.0
69–3/8	24		80.0	80.0
	30		80.0	80.0
	37–5/8		80.0	80.0
75–3/8	24		80.0	80.0
	30		80.0	80.0
	37–5/8		80.0	80.0

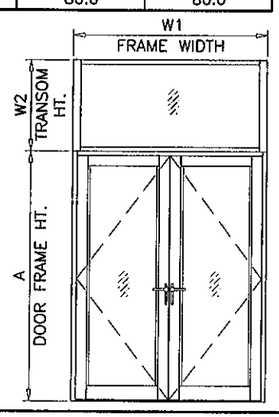

$$W1\ (\text{SINGLE DOOR FRAME WIDTH}) = \frac{W1}{2} + 1\text{–}5/8''$$

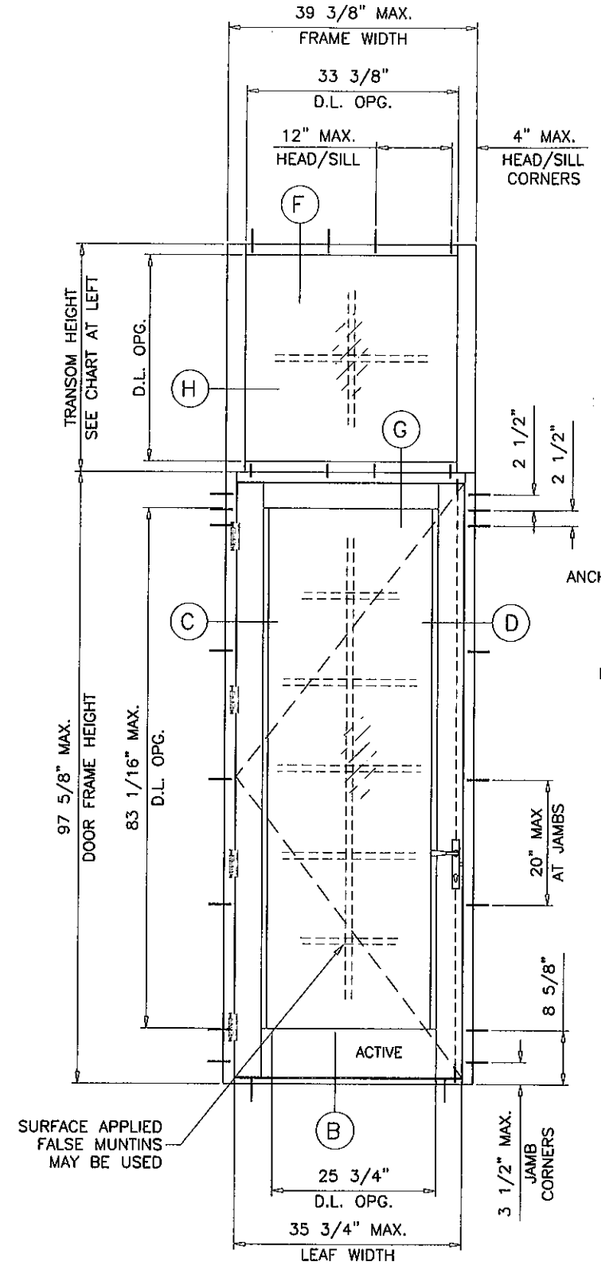

(O/X)

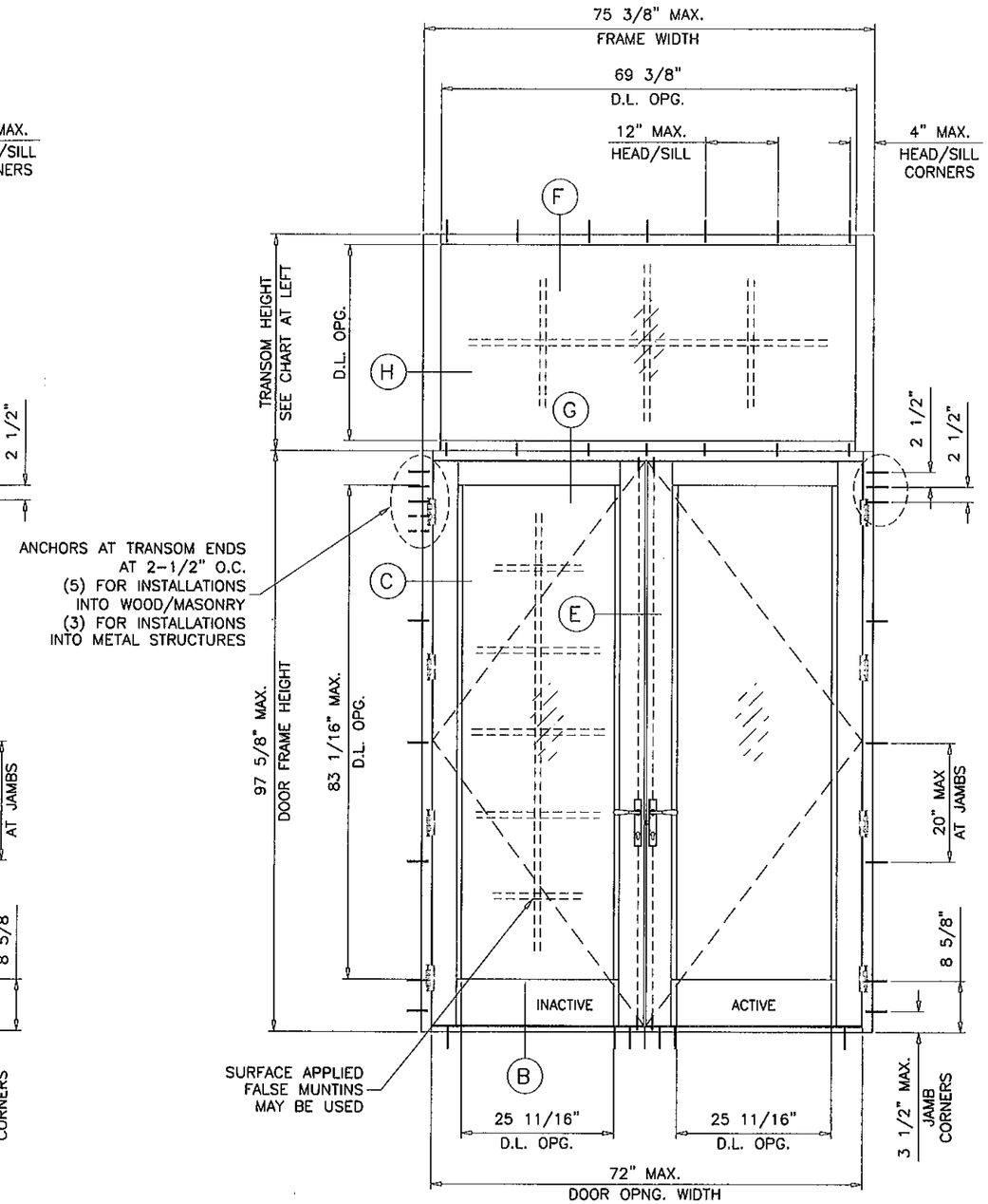

(O/XX)

PRODUCT REVISED
as complying with the Florida
Building Code
Acceptance No 12-0410.18
Expiration Date 08/19/2014
By
Miami Dade Product Control

Engr: JAVAD AHMAD
CIVIL
FLA. PE # 70592
C.A.N. 3538

MAR 27 2012

AL-FAROOQ CORPORATION
ENGINEERS & PRODUCT DEVELOPMENT
1235 S.W. 87 AVE
MIAMI, FLORIDA 33174
TEL. (305) 264-8100 FAX. (305) 262-6978
COMP–ANL\W04–37RC

SERIES RD45 ALUM ENTRANCE DOOR (L.M.I.)

R.C. ALUMINUM INDUSTRIES INC.
2805 N.W. 75 TH AVE.
MIAMI, FL. 33122
TEL. (305) 592-1515 FAX. (305) 592-2184

revisions:

no	date	by	description
A	07.09.04		REV. PER BCCO COMMENTS
B	05.14.08		GENERAL REVISION
C	07.09.08		REV. PER BCCO COMMENTS
D	05.05.09		ENGR. NAME REV.
E	03.21.12		UPDATED TO 2010 FBC

date: 05–09–04
scale: 1/2"=1'–0"
dr. by: HAMID
chk. by:

drawing no.
W04–37

DESIGN LOAD CAPACITY – PSF SIDELITES		
SIDELITE WIDTH INCHES	FRAME HEIGHT INCHES	GLASS TYPE 'A' & 'B' EXT.(+)/INT.(–)
36–1/4	81–5/8	80.0
38–5/8		80.0
41–1/4		80.0
43–1/4		80.0
36–1/4	85–5/8	80.0
38–5/8		80.0
41–1/4		80.0
36–1/4	91–5/8	80.0
38–5/8		80.0
36–1/4	97–5/8	80.0

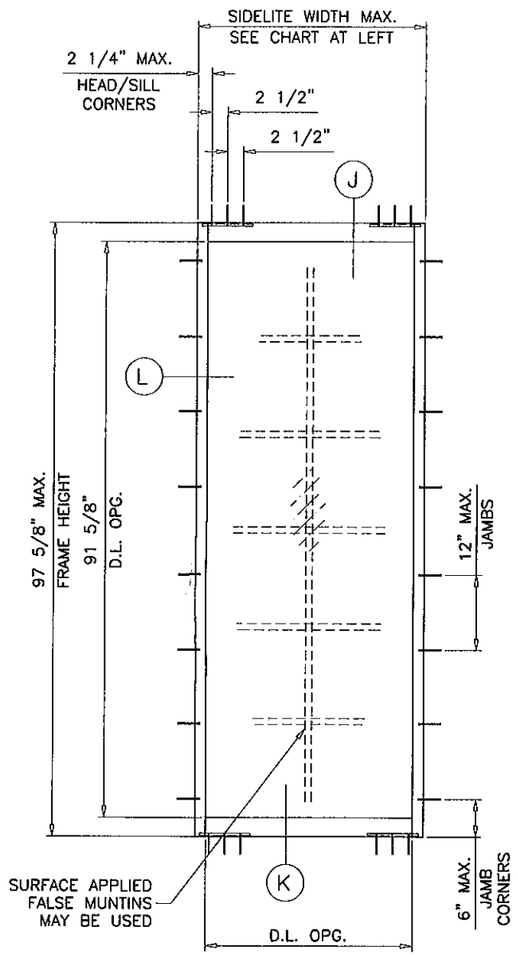

(O)

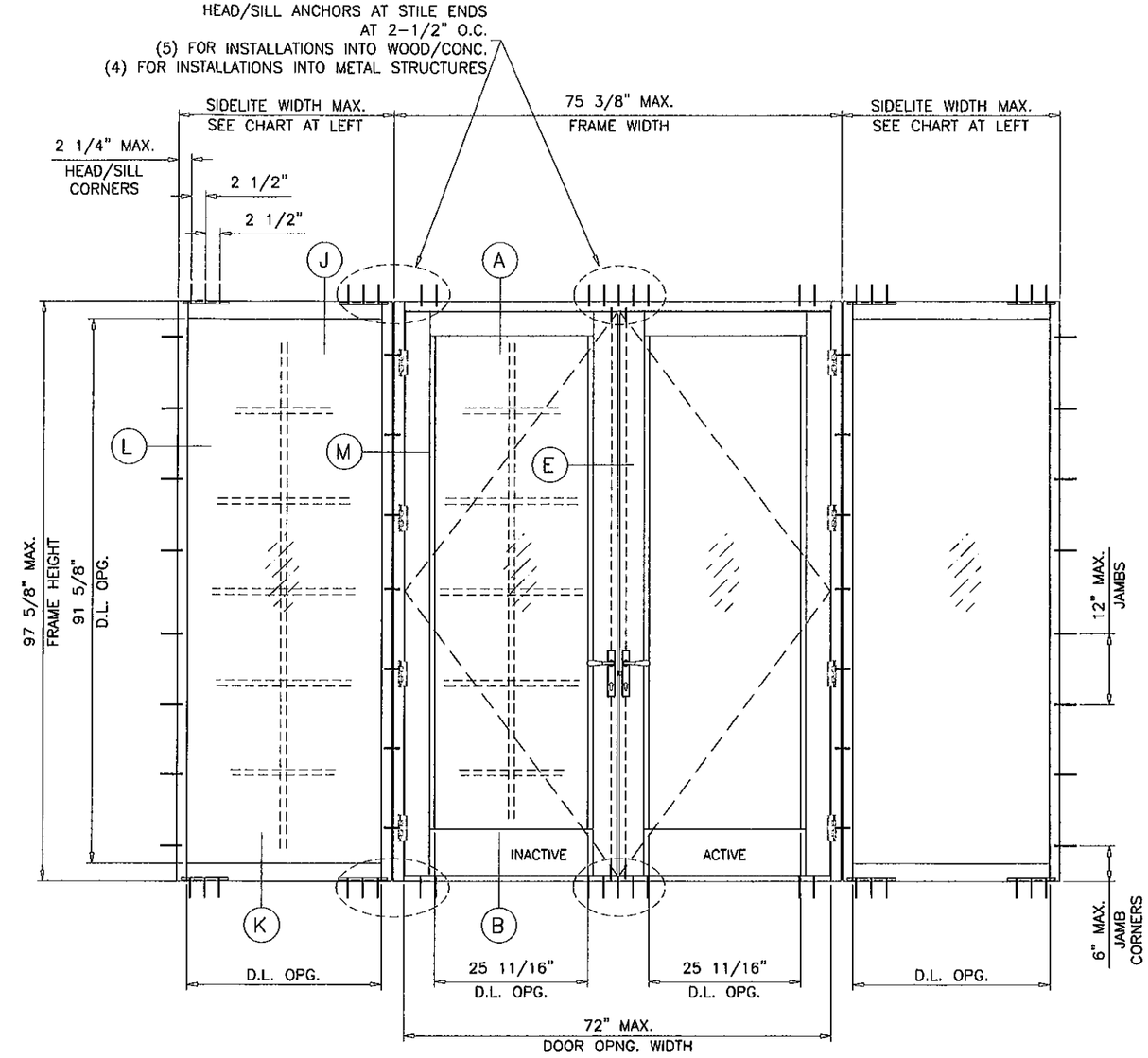

(OXXO)

NOTE:
FOR DOORS CAPACITY SEE SHEET 1
(MAX. DOOR FRAME WIDTH = 75–3/8"
MAX. DOOR FRAME HEIGHT = 97–5/8")
FOR SIDELITE CAPACITIES SEE CHART ABOVE.
LOWER VALUES FROM DOORS OR SIDELITE
CHART WILL APPLY TO ENTIRE SYSTEM.

PRODUCT REVISED
as complying with the Florida
Building Code 12-0410.18
Acceptance No
Expiration Date 08/19/2014
By
Miami Dade Product Control

Engr: JAVAD AHMAD
CIVIL
FLA. PE # 70592
C.A.N. 3538

MAR 27 2012

AL-FAROOQ CORPORATION
ENGINEERS & PRODUCT DEVELOPMENT
1235 S.W. 87 AVE
MIAMI, FLORIDA 33174
TEL (305) 264-8100 FAX. (305) 262-6978
COMP-ANL\W04-37RC

SERIES RD45 ALUM ENTRANCE DOOR (L.M.I.)

R.C. ALUMINUM INDUSTRIES INC.
2805 N.W. 75 TH AVE.
MIAMI, FL. 33122
TEL. (305) 592-1515 FAX. (305) 592-2184

revisions:

no	date	by	description
A	07.09.04		REV. PER BCCO COMMENTS
B	05.14.08		GENERAL REVISION
C	07.09.08		REV. PER BCCO COMMENTS
D	05.05.09		ENGR. NAME REV.
E	03.21.12		UPDATED TO 2010 FBC

date: 05-09-04
scale: 1/2"=1'-0"
dr. by: HAMID
chk. by:

drawing no.
W04-37

LOCK OPTIONS SINGLE DOORS:

OPTION #1:

3 POINT LOCK SYSTEM BY 'AMESBURY'
WITH SURFACE MOUNT HANDLE AT 36" FROM BOTTOM
AND DEAD BOLT LOCKSET AT 32" FROM BOTTOM
KEY OPERATED ON EXTERIOR AND THUMB TURN ON
INTERIOR.

OPTION #2:

3 POINT LOCK SYSTEM BY 'HOPPE'
WITH SURFACE MOUNT HANDLE AT 36" FROM BOTTOM
AND DEAD BOLT LOCKSET AT 32-1/2' FROM BOTTOM
KEY OPERATED ON EXTERIOR AND THUMB TURN ON
INTERIOR.

LOCK OPTIONS DOUBLE DOORS:

OPTION #1:

ACTIVE LEAF:

3 POINT LOCK SYSTEM BY 'AMESBURY'
WITH SURFACE MOUNT HANDLE AT 36" FROM BOTTOM
AND DEAD BOLT LOCKSET AT 32" FROM BOTTOM
KEY OPERATED ON EXTERIOR AND THUMB TURN ON
INTERIOR.

INACTIVE LEAF

2 POINT LOCK SYSTEM BY 'AMESBURY'
SHOOT BOLTS ENGAGING SIMULTANEOUSLY AT HEAD & SILL
SURFACE MOUNT ACTUATING HANDLE AT 36" FROM BOTTOM

OPTION #2:

ACTIVE LEAF:

3 POINT LOCK SYSTEM BY 'HOPPE'
WITH SURFACE MOUNT HANDLE AT 36" FROM BOTTOM
AND DEAD BOLT LOCKSET AT 32-1/2' FROM BOTTOM
KEY OPERATED ON EXTERIOR AND THUMB TURN ON
INTERIOR.

INACTIVE LEAF

2 POINT LOCK SYSTEM BY 'HOPPE'
SHOOT BOLTS ENGAGING SIMULTANEOUSLY AT HEAD & SILL
SURFACE MOUNT ACTUATING HANDLE AT 36" FROM BOTTOM

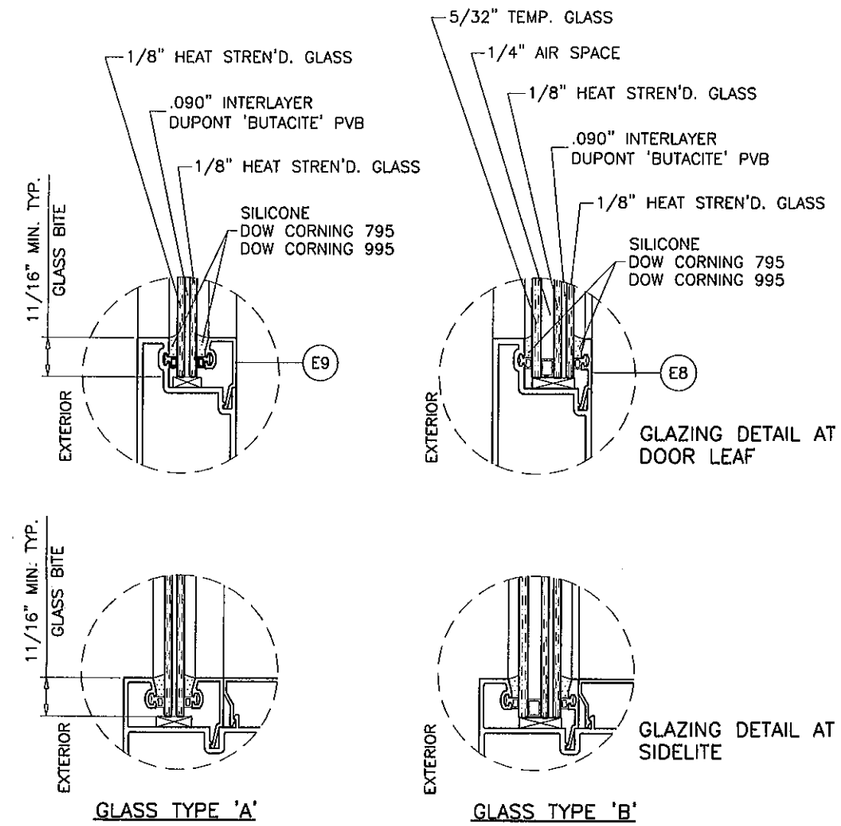

GLAZING OPTIONS

PRODUCT REVISED
as complying with the Florida
Building Code
Acceptance No 12-0410.18
Expiration Date 08/19/2014
By
Miami Dade Product Control

Engr: JAVAD AHMAD
CIVIL
FLA. PE # 70592
C.A.N. 3538

MAR 27 2012

AL-FAROOQ CORPORATION
ENGINEERS & PRODUCT DEVELOPMENT
1235 S.W. 87 AVE
MIAMI, FLORIDA 33174
TEL. (305) 264-8100 FAX. (305) 262-6978

COMP-ANL\W04-37RC

SERIES RD45 ALUM ENTRANCE DOOR (L.M.I.)

R.C. ALUMINUM INDUSTRIES INC.
2805 N.W. 75 TH AVE.
MIAMI, FL. 33122
TEL. (305) 592-1515 FAX. (305) 592-2184

revisions:

no	date	by	description
B	05.14.08		GENERAL REVISION
C	07.09.08		REV. PER BCCO COMMENTS
D	05.05.09		ENGR. NAME REV.
E	03.21.12		NO CHANGE THIS SHEET

date: 05-09-04
scale: 3/8" = 1"
dr. by: HAMID
chk. by:

drawing no.
W04-37

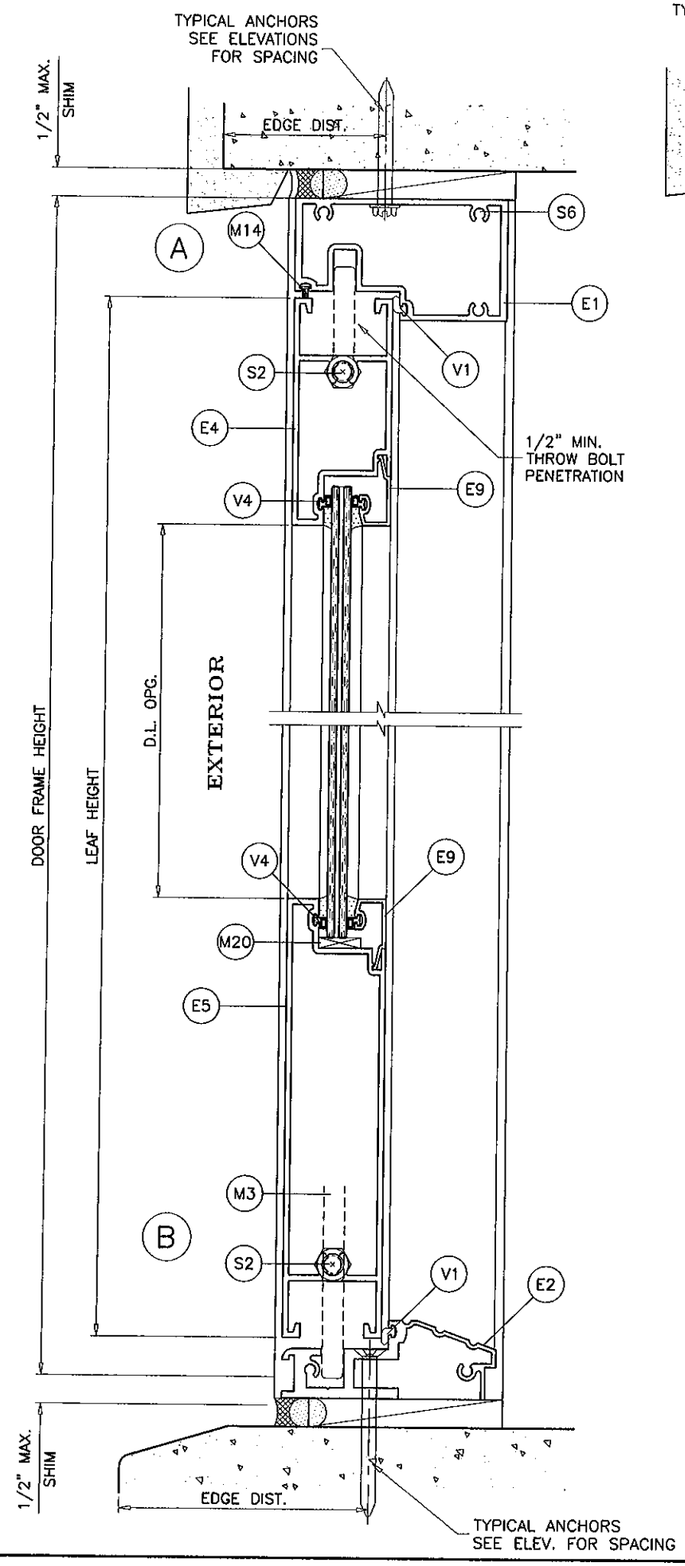

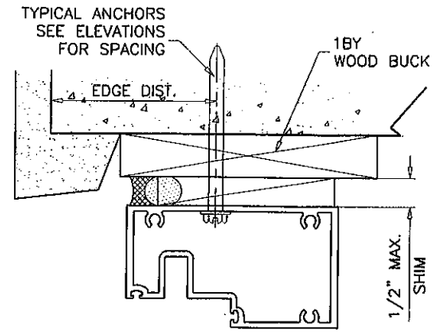

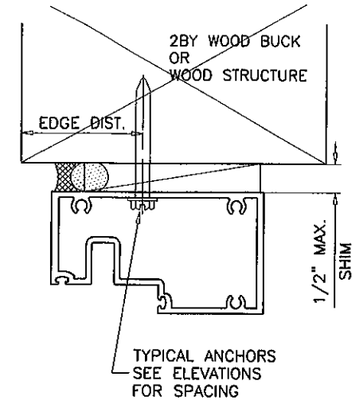

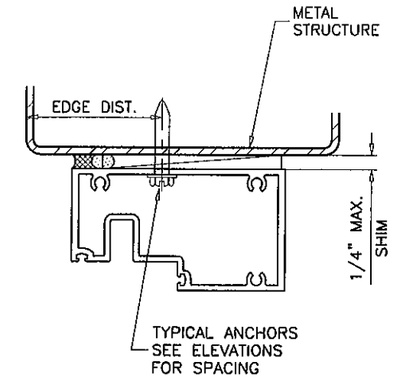

WOOD BUCKS AND METAL STRUCTURES NOT BY RC ALUMINUM, MUST SUSTAIN LOADS IMPOSED BY GLAZING SYSTEM AND TRANSFER THEM TO THE BUILDING STRUCTURE.

TYPICAL ANCHORS: SEE ELEV. FOR SPACING

1/4" DIA. HILTI KWIK-CON II (Fu=163 KSI, Fy=157 KSI)
INTO 2BY WOOD BUCKS OR WOOD STRUCTURES
1-1/2" MIN. WOOD PENETRATION

THRU 1BY WOOD BUCKS INTO MASONRY OR CONC.
1-1/4" MIN. EMBED INTO MASONRY OR CONC.

DIRECTLY INTO MASONRY OR CONCRETE
1-1/2" MIN. EMBED INTO CONCRETE

1/4" DIA. TEKS OR SELF DRILLING SCREWS (GRADE 5 CRS)
INTO METAL STRUCTURES

STEEL : 1/8" THK. MIN. (Fy = 36 KSI MIN.)
ALUMINUM : 1/8" THK. MIN. (6063-T5 MIN.)
(STEEL IN CONTACT WITH ALUMINUM TO BE PLATED OR PAINTED)

TYPICAL EDGE DISTANCE

INTO CONCRETE AND MASONRY = 2-1/2" MIN.
INTO WOOD STRUCTURE = 1" MIN.
INTO METAL STRUCTURE = 3/4" MIN.

CONCRETE AT HEAD, SILL OR JAMBS f'c = 3000 PSI MIN.
C-90 HOLLOW/FILLED BLOCK AT JAMBS f'm = 1500 PSI MIN.

SEALANTS:

ALL FRAME AND PANEL JOINT, INSTALLATION SCREWS AND HEADS OF ANCHOR SCREWS AT SILL TO BE SEALED WITH WHITE/ALUM COLORED SILICONE.

PRODUCT REVISED
as complying with the Florida
Building Code
Acceptance No 12-0410.18
Expiration Date 08/19/2014
By
Miami Dade Product Control

Engr: JAVAD AHMAD
CIVIL
FLA. PE # 70592
C.A.N. 3538

MAR 27 2012

AL-FAROOQ CORPORATION
ENGINEERS & PRODUCT DEVELOPMENT
1235 S.W. 87 AVE
MIAMI, FLORIDA 33174
TEL (305) 264-8100 FAX. (305) 262-6978

COMP-ANL\W04-37RC

SERIES RD45 ALUM ENTRANCE DOOR (L.M.I.)

R.C. ALUMINUM INDUSTRIES INC.
2805 N.W. 75 TH AVE.
MIAMI, FL. 33122
TEL. (305) 592-1515 FAX. (305) 592-2184

revisions:

no	date	by	description
A	07.09.04		REV. PER BCCO COMMENTS
B	05.14.08		GENERAL REVISION
C	07.09.08		REV. PER BCCO COMMENTS
D	05.05.09		ENGR. NAME REV.
E	03.21.12		UPDATED TO 2010 FBC

date: 05-09-04
scale: 3/8" = 1"
dr. by: HAMID
chk. by:

drawing no.
W04-37

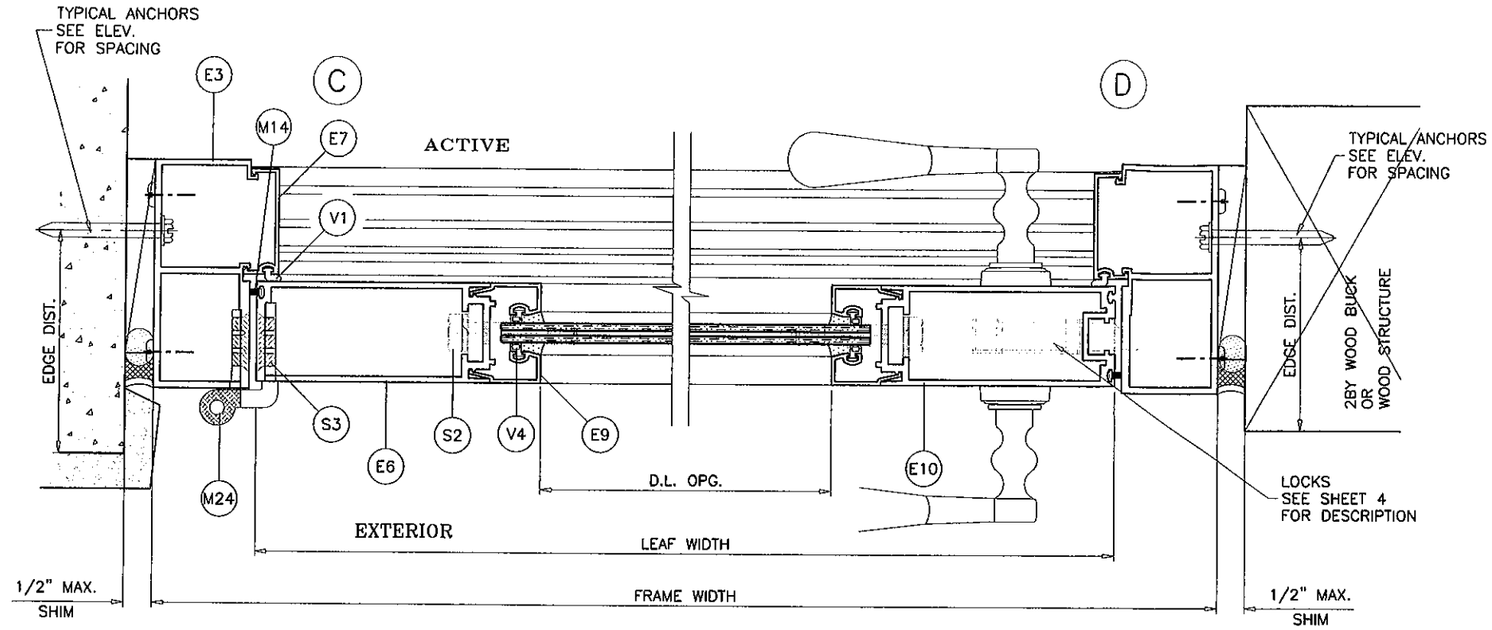

(X)

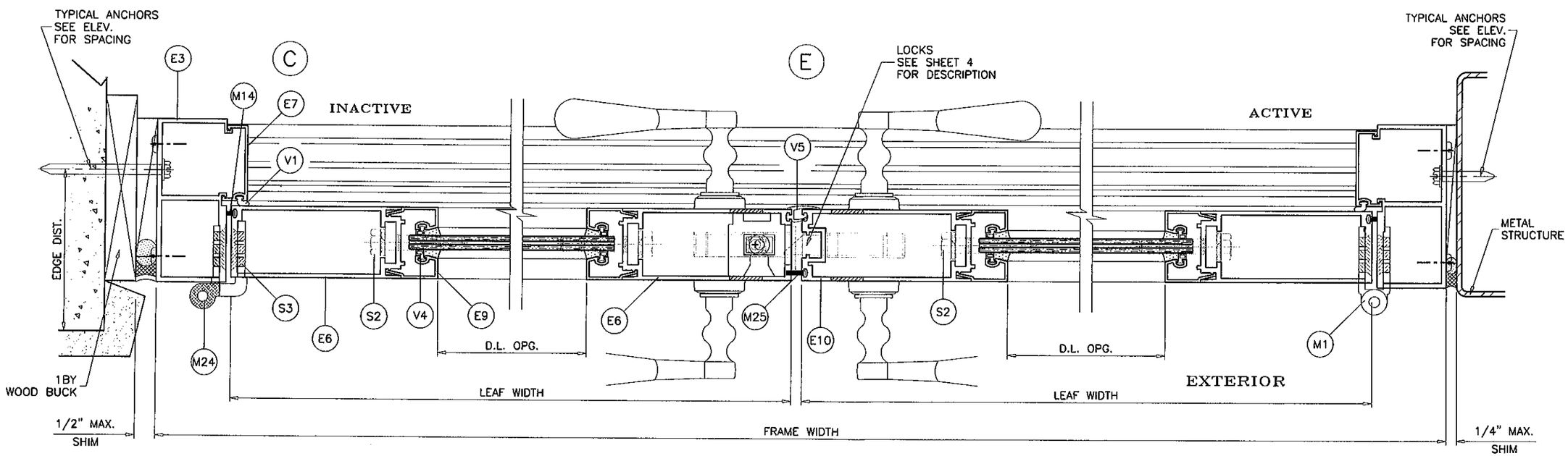

(XX)

PRODUCT REVISED
as complying with the Florida
Building Code
Acceptance No 12-0410.18
Expiration Date 08/19/2014
By
Miami Dade Product Control

Engr: JAVAD AHMAD
CIVIL
FLA. PE # 70592
C.A.N. 3538

MAR 27 2012

AL-FAROOQ CORPORATION
ENGINEERS & PRODUCT DEVELOPMENT
1235 S.W. 87 AVE
MIAMI, FLORIDA 33174
TEL. (305) 264-8100 FAX. (305) 262-6978
COMP-ANL\W04-37RC

SERIES RD45 ALUM ENTRANCE DOOR (L.M.I.)

R.C. ALUMINUM INDUSTRIES INC.
2805 N.W. 75 TH AVE.
MIAMI, FL. 33122
TEL. (305) 592-1515 FAX. (305) 592-2184

revisions:

no	date	by	description
A	07.09.04		REV. PER BCCO COMMENTS
B	05.14.08		GENERAL REVISION
C	07.09.08		REV. PER BCCO COMMENTS
D	05.05.09		ENGR. NAME REV.
E	03.21.12		NO CHANGE THIS SHEET

date: 05-09-04
scale: 3/8" = 1"
dr. by: HAMID
chk. by:

drawing no.
W04-37

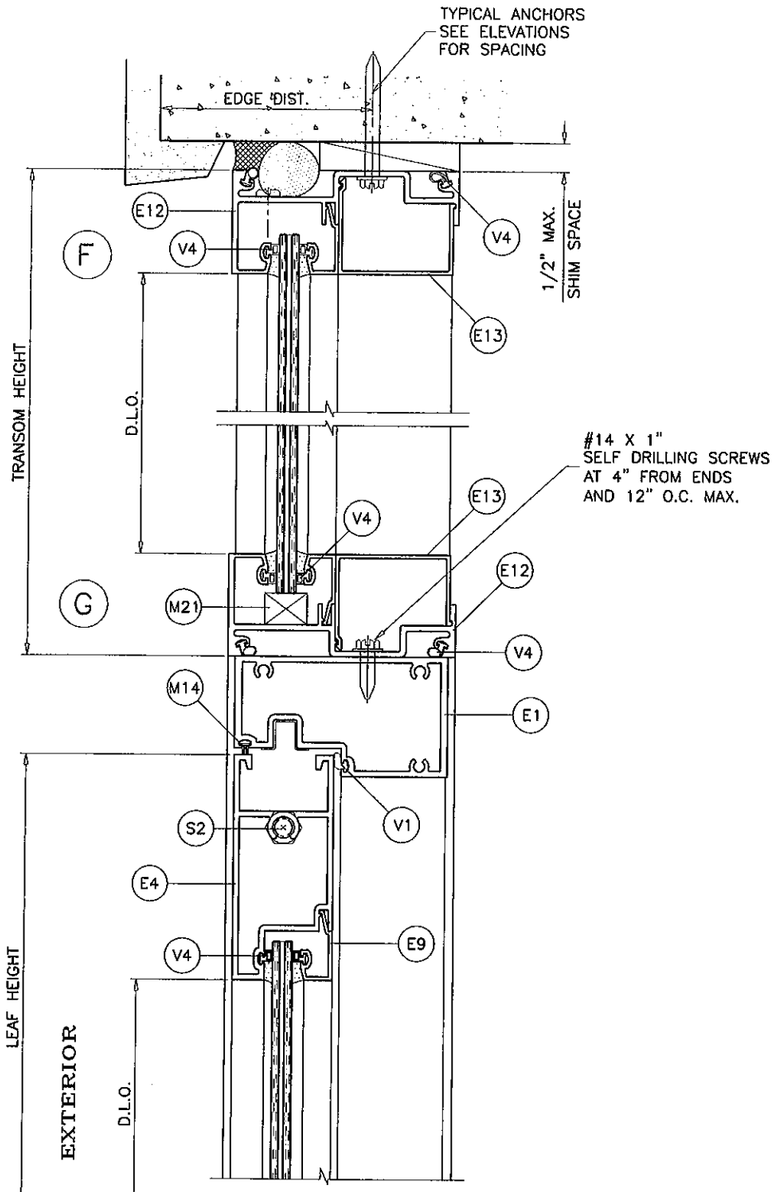

(O/X)
(O/XX)

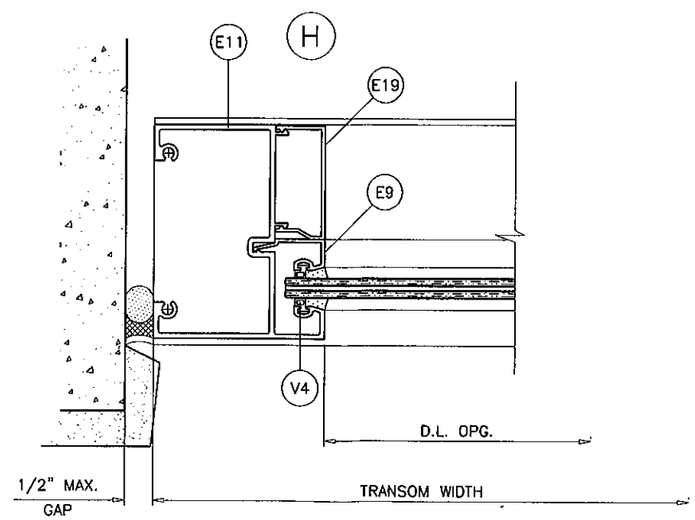

EXTERIOR

PRODUCT REVISED
as complying with the Florida
Building Code 12-0410.18
Acceptance No
Expiration Date 08/19/2014
By
Miami Dade Product Control

Engr: JAVAD AHMAD
CIVIL
FLA. PE # 70592
C.A.N. 3538

MAR 27 2012

AL-FAROOQ CORPORATION
ENGINEERS & PRODUCT DEVELOPMENT
1235 S.W. 87 AVE
MIAMI, FLORIDA 33174
TEL (305) 264-8100 FAX. (305) 262-6978

COMP-ANL\W04-37RC

SERIES RD45 ALUM ENTRANCE DOOR (L.M.I.)

R.C. ALUMINUM INDUSTRIES INC.
2805 N.W. 75 TH AVE.
MIAMI, FL. 33122
TEL. (305) 592-1515 FAX. (305) 592-2184

revisions:

no	date	by	description
A	07.09.04		REV. PER BCCO COMMENTS
B	05.14.08		GENERAL REVISION
C	07.09.08		REV. PER BCCO COMMENTS
D	05.05.09		ENGR. NAME REV.
E	03.21.12		NO CHANGE THIS SHEET

date: 05-09-04
scale: 3/8" = 1"
dr. by: HAMID
chk. by:

drawing no.
W04-37

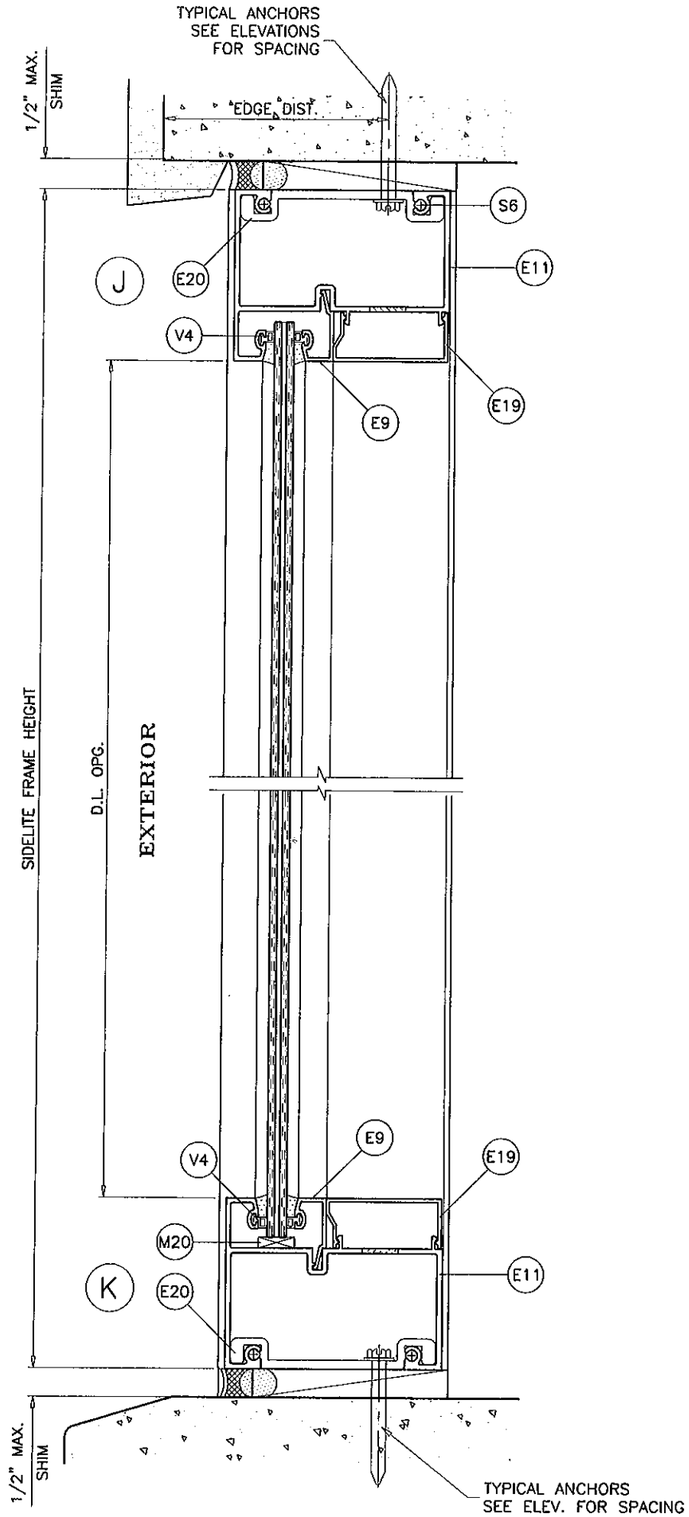

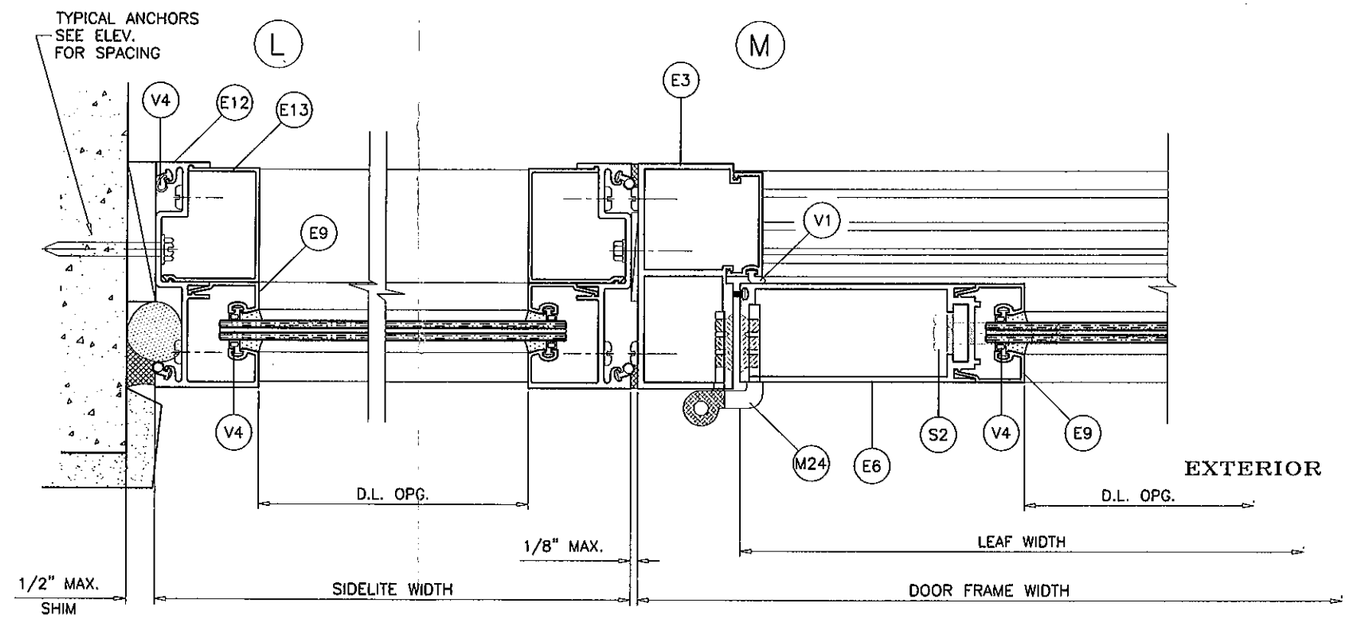

(DOOR W/ SIDELITE)

PRODUCT REVISED
as complying with the Florida
Building Code
Acceptance No 12-0410.18
Expiration Date 08/19/2014
By
Miami Dade Product Control

Engr: JAVAD AHMAD
CIVIL
FLA. PE # 70592
C.A.N. 3538

MAR 27 2012

AL-FAROOQ CORPORATION
ENGINEERS & PRODUCT DEVELOPMENT
1235 S.W. 87 AVE
MIAMI, FLORIDA 33174
TEL. (305) 264-8100 FAX. (305) 262-6978

COMP-ANL\W04-37RC

SERIES RD45 ALUM ENTRANCE DOOR (L.M.I.)

R.C. ALUMINUM INDUSTRIES INC.
2805 N.W. 75 TH AVE.
MIAMI, FL. 33122
TEL. (305) 592-1515 FAX. (305) 592-2184

revisions:

no	date	by	description
A	07.09.04		REV. PER BCCO COMMENTS
B	05.14.08		GENERAL REVISION
C	07.09.08		REV. PER BCCO COMMENTS
D	05.05.09		ENGR. NAME REV.
E	03.21.12		NO CHANGE THIS SHEET

date: 05-09-04
scale: 3/8" = 1"
dr. by: HAMID
chk. by:

drawing no.
W04-37

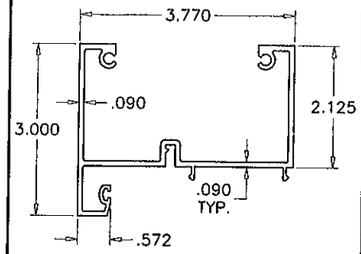

(E11) SIDELITE HEAD/SILL TRANSOM JAMB

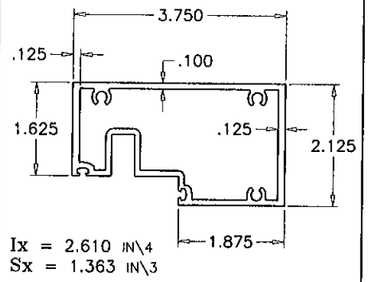

(E1) DOOR HEAD

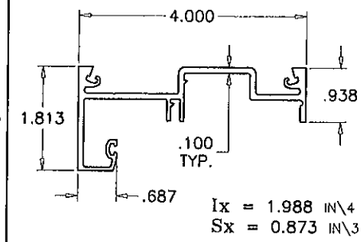

(E12) SIDELITE JAMB TRANSOM HEAD/SILL

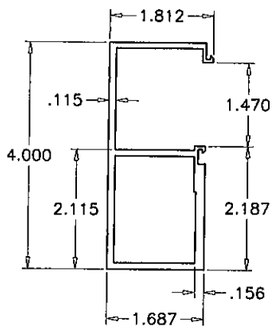

(E3) FRAME JAMB Ix = 2.262 IN\4 Sx = 1.024 IN\3

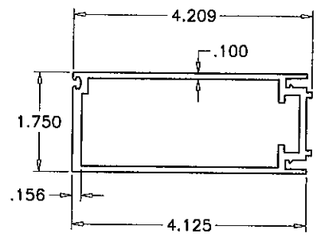

(E6) HINGE STILE INACTIVE LOCK STILE

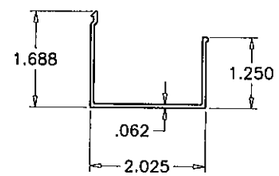

(E13) SNAP COVER

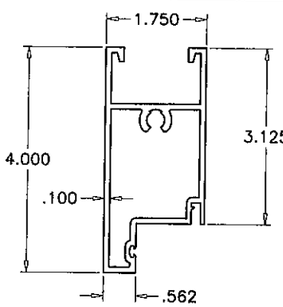

(E4) TOP RAIL

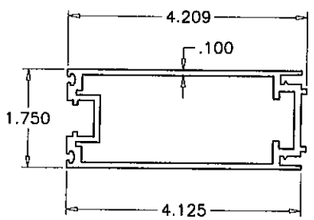

(E10) ACTIVE LEAF LOCK STILE

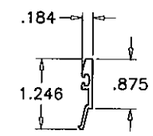

(E8) GLAZING BEAD (LAM. INSUL. GLASS)

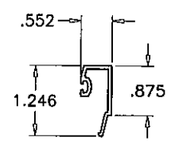

(E9) GLAZING BEAD (LAM. GLASS)

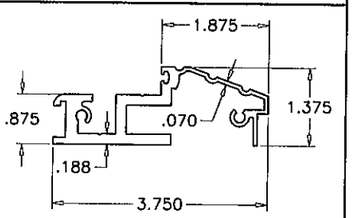

(E2) FRAME SILL

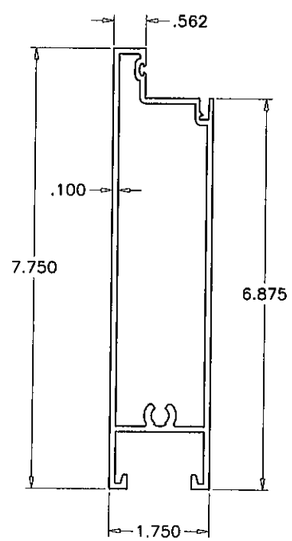

(E5) BOTTOM RAIL

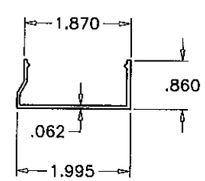

(E19) INTERIOR SNAP COVER

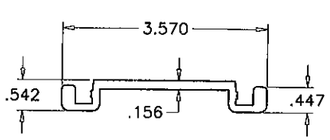

(E20) ANCHOR CLIP

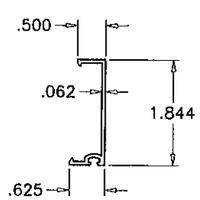

(E7) VERT. JAMB STOP

ITEM #	NUMBER	REQD.	DESCRIPTION	MATERIAL	MANF./SUPPLIER/REMARKS
E1	RD45-023	1	FRAME HEAD	6005-T5	-
E2	RD45-024	1	FRAME SILL	6063-T6	-
E3	RD45-022	2	FRAME JAMB	6063-T6	-
E4	RD45-004	1/LEAF	TOP RAIL	6063-T6	-
E5	RD45-021	1/ LEAF	BOTTOM RAIL	6063-T6	-
E6	RD45-006	2/ LEAF	HINGE STILE/INACTIVE LEAF LOCK STILE	6005-T5	-
E7	RD45-002	2	VERTICAL JAMB STOP	6063-T6	-
E8	RD45-010	AS REQD.	GLAZING BEAD (LAM. INSUL. GLASS)	6063-T6	-
E9	RD45-007	AS REQD.	GLAZING BEAD (LAM. GLASS)	6063-T6	-
E10	RD45-017A	AS REQD.	LOCK STILE ACTIVE LEAF	6005-T5	-
E11	RD45-014	AS REQD.	SIDELITE HEAD/SILL, TRANSOM JAMB	6005-T5	-
E12	RD45-015	AS REQD.	JAMB AT SIDE LITE, HEAD/SILL AT TRANSOM	6063-T6	-
E13	RD45-016	AS REQD.	SNAP COVER	-	-
E19	RD45-029	AS REQD.	INTERIOR SNAP COVER	-	-
E20	RD45-030	AS REQD.	ANCHOR CLIP, 8" LONG	6063-T6	-
M1	RD45-M01	4/ LEAF	HINGE ASSEMBLY	6005-T5	-
M3	RD45-M03	AS REQD.	FLUSH BOLT AT 3 POINT LOCK	-	-
M14	W31384NK	AS REQD.	WEATHERSTRIPPING	-	-
M20	-		3/16" x 1/2" x 4" SETTING BLOCK.	-	6" FROM EACH END
M21	-		1/2" x 3/4" x 4" SETTING BLOCK.	-	6" FROM EACH END & MIDSPAN
M24	RD45-M13	4/ LEAF	HANDICAP OFFSET HINGE ASSEMBLY	6005-T5	-
M25	W31421NK	AS REQD.	WEARHERSTRIPPING	-	-
V1	Q375T270		DOOR W'STRIPPING	FOAM	Q-LON
V2	V-059		OFFSET BULB VINYL WSTP.	PVC	
V4	V-009		BULB W'STRIPPING, DUROMETER 75±5 SHORE A	PVC	WIBORG, WV-3289
V5	V-065		PEROXIDE THREAD-IN FINGER	-	TREMCO
S2		AS REQD.	ø3/8"-16 X 2" LG. FULL THREAD HX.HD..	-	1 PER CONER
S3		4/ HINGE	#12 - 24 X 3/4" LG. PHIL. F.H. MACHINE SCREW	ST/ST	HINGE INSTALLATION SCREWS
S6		AS REQD.	#12 X 1-1/4" LG. PHIL. SMS.	ST/ST	ASSEMBLY FASTENERS

SEE SHEET 4 FOR LOCKS OPTIONS AND DESCRIPTION

PRODUCT REVISED
as complying with the Florida
Building Code
Acceptance No 12-0410.18
Expiration Date 08/19/2014
By
Miami Dade Product Control

Engr: JAVAD AHMAD
CIVIL
FLA. PE # 70592
C.A.N. 3538

MAR 27 2012

AL-FAROOQ CORPORATION
ENGINEERS & PRODUCT DEVELOPMENT
1235 S.W. 87 AVE
MIAMI, FLORIDA 33174
TEL. (305) 264-8100 FAX. (305) 262-6978

COMP-ANL\W04-37RC

SERIES RD45 ALUM ENTRANCE DOOR (L.M.I.)

R.C. ALUMINUM INDUSTRIES INC.
2805 N.W. 75 TH AVE.
MIAMI, FL. 33122
TEL. (305) 592-1515 FAX. (305) 592-2184

revisions:

no	date	by	description
A	07.09.04		NO CHANGE THIS SHEET
B	05.14.08		GENERAL REVISION
C	07.09.08		REV. PER BCCO COMMENTS
D	05.05.09		ENGR. NAME REV.
E	03.21.12		NO CHANGE THIS SHEET

date: 05-09-04
scale: 3/8" = 1"
dr. by: HAMID
chk. by:

drawing no. W04-37

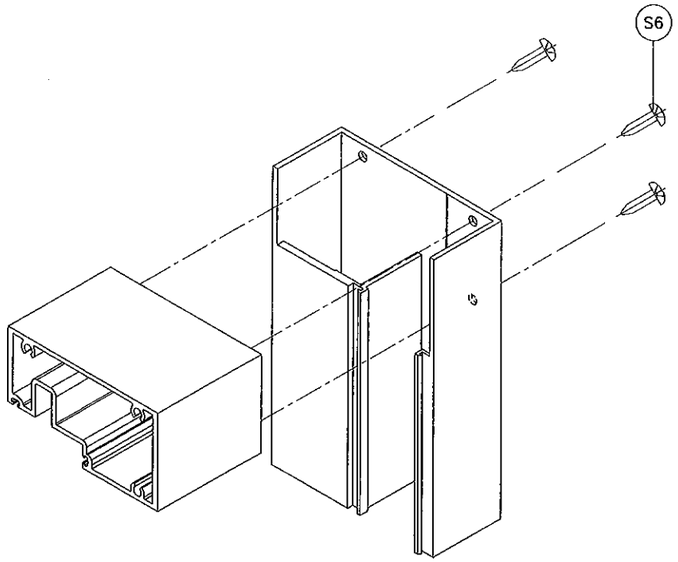

DOOR TOP CORNER

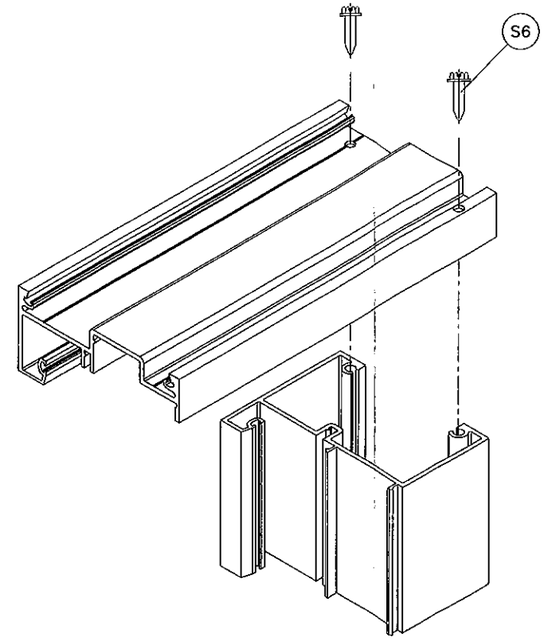

TRANSOM TOP/BOTTOM CORNER

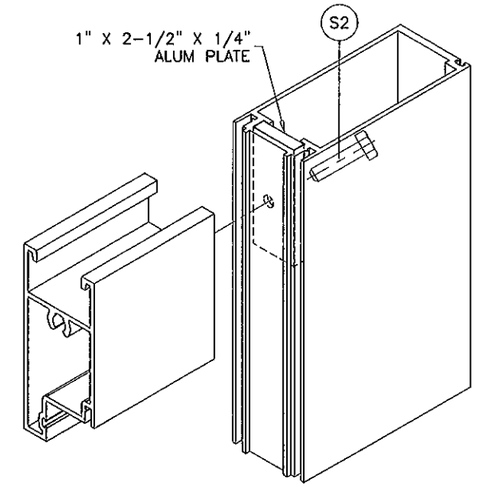

LEAF TOP CORNER

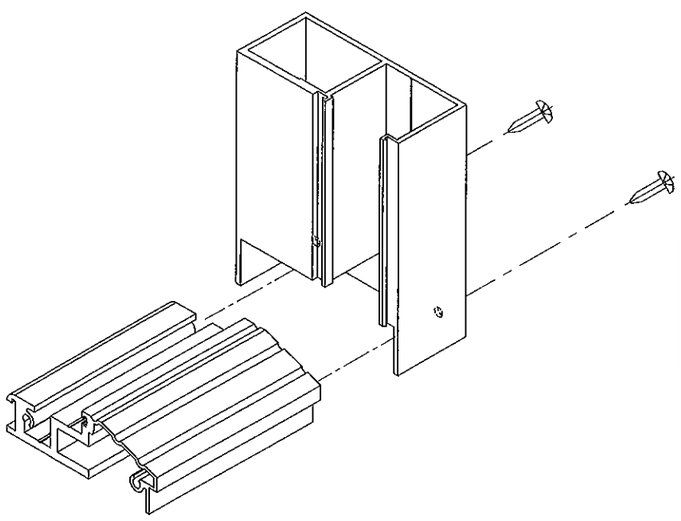

DOOR BOTTOM CORNER

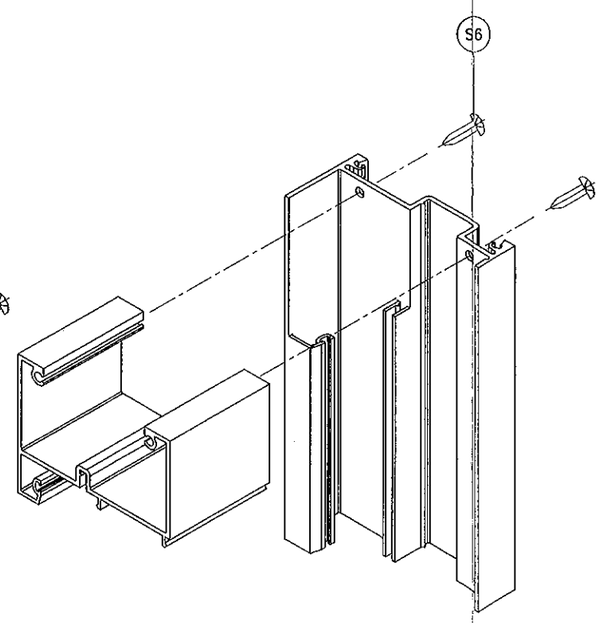

SIDELITE TOP/BOTTOM CORNER

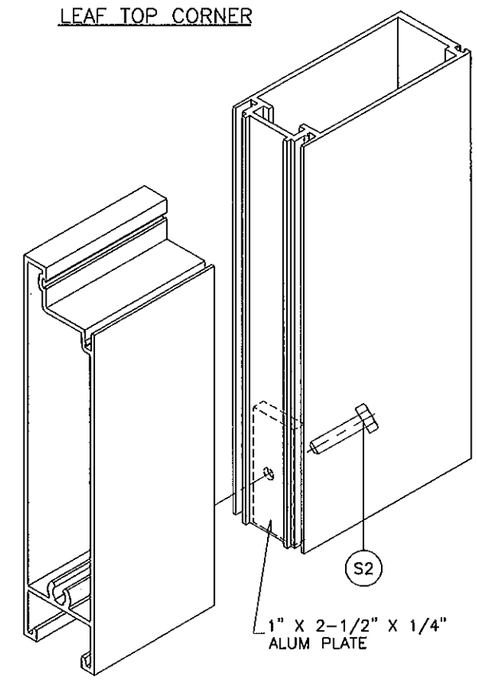

LEAF BOTTOM CORNER

PRODUCT REVISED
as complying with the Florida
Building Code
Acceptance No 12-0410.18
Expiration Date 08/19/2014
By
Miami Dade Product Control

Engr: JAVAD AHMAD
CIVIL
FLA. PE # 70592
C.A.N: 3538

MAR 27 2012

AL-FAROOQ CORPORATION
ENGINEERS & PRODUCT DEVELOPMENT
1235 S.W. 87 AVE
MIAMI, FLORIDA 33174
TEL. (305) 264-8100 FAX. (305) 262-6978
COMP-ANL\W04-37RC

SERIES RD45 ALUM ENTRANCE DOOR (L.M.I.)

R.C. ALUMINUM INDUSTRIES INC.
2805 N.W. 75 TH AVE.
MIAMI, FL. 33122
TEL. (305) 592-1515 FAX. (305) 592-2184

revisions:

no	date	by	description
A	07.09.04		NO CHANGE THIS SHEET
B	05.14.08		GENERAL REVISION
C	07.09.08		NO CHANGE THIS SHEET
D	05.05.09		ENGR. NAME REV.
E	03.21.12		NO CHANGE THIS SHEET

date: 05-09-04
scale: 3/8" = 1"
dr. by: HAMID
chk. by:

drawing no.
W04-37

sheet 10 of 10