MIAMI-DADE COUNTY
DEPARTMENT OF PERMITTING, ENVIRONMENT, AND REGULATORY AFFAIRS (PERA)
BOARD AND CODE ADMINISTRATION DIVISION

MIAMI–DADE COUNTY, FLORIDA
PRODUCT CONTROL SECTION
11805 SW 26 Street, Room 208
Miami, Florida 33175–2474
T (786) 315–2590 F (786) 315–2599
www.miamidade.gov/pera/

NOTICE OF ACCEPTANCE (NOA)

R. C. Aluminum Industries, Inc.
2805 NW 75th Ave
Miami, FL 33122

SCOPE:

This NOA is being issued under the applicable rules and regulations governing the use of construction materials. The documentation submitted has been reviewed and accepted by Miami–Dade County PERA–Product Control Section to be used in Miami–Dade County and other areas where allowed by the Authority Having Jurisdiction (AHJ).

This NOA shall not be valid after the expiration date stated below. The Miami–Dade County Product Control Section (In Miami–Dade County) and/or the AHJ (in areas other than Miami–Dade County) reserve the right to have this product or material tested for quality assurance purposes. If this product or material fails to perform in the accepted manner, the manufacturer will incur the expense of such testing and the AHJ may immediately revoke, modify, or suspend the use of such product or material within their jurisdiction. PERA reserves the right to revoke this acceptance, if it is determined by Miami–Dade County Product Control Section that this product or material fails to meet the requirements of the applicable building code.

This product is approved as described herein, and has been designed to comply with the Florida Building Code, including the High Velocity Hurricane Zone.

DESCRIPTION: Series "ML–100" Aluminum Tube Mullion – L.M.I.

APPROVAL DOCUMENT: Drawing No. **W04–05**, titled "Series Tube Mullions", sheets 1 through 7 of 7, dated 05/02/04, prepared by AL–Farooq Corporation, with latest revised "**D**" dated 03/21/12, signed and sealed by Javad Ahmad, P. E., bearing the Miami–Dade County Product Control Revision stamp with the Notice of Acceptance number and Expiration date by the Miami–Dade County Product Control Section.

MISSILE IMPACT RATING: Large and Small Missile Impact Resistant.

LIMITATIONS: Any Sheet Metal Screws (SMS) And Any TEKS Screws Shall Be Equal Or Greater Than SAE Grade 2 (Minimum F_y Of 57 Ksi (Yield Strength) And Minimum F_u Of 74 Ksi (Ultimate Strength)).

LABELING: Each unit shall bear a permanent label with the manufacturer's name or logo, city, state, series and following statement: "Miami–Dade County Product Control Approved" unless otherwise noted herein.

RENEWAL of this NOA shall be considered after a renewal application has been filed and there has been no change in the applicable building code negatively affecting the performance of this product.

TERMINATION of this NOA will occur after the expiration date or if there has been a revision or change in the materials, use, and/ or manufacture of the product or process. Misuse of this NOA as an endorsement of any product, for sales, advertising or any other purposes shall automatically terminate this NOA. Failure to comply with any section of this NOA shall be cause for termination and removal of NOA.

ADVERTISEMENT: The NOA number preceded by the words Miami–Dade County, Florida, and followed by the expiration date may be displayed in advertising literature. If any portion of the NOA is displayed, then it shall be done in its entirety.

INSPECTION: A copy of this entire NOA shall be provided to the user by the manufacturer or its distributors and shall be available for inspection at the job site at the request of the Building Official.

This NOA **revises NOA No. 09–0128.14** and consists of this page 1, evidence pages E–1 and E–2, as well as approval document mentioned above.

The submitted documentation was reviewed by **Jaime D. Gascon, P. E.**

MIAMI-DADE COUNTY APPROVED

J Gascon 6/19/12

NOTICE OF ACCEPTANCE: EVIDENCE SUBMITTED

A. DRAWINGS

1. Manufacturer's die drawings and sections.
   (Submitted under previous NOA No. 04–0608.05)
2. Drawing No. **W04–05**, titled "Series Tube Mullions", sheets 1 through 7 of 7, dated 05/02/04, prepared by AL–Farooq Corporation, with latest revised "**D**" dated 03/21/12, signed and sealed by Javad Ahmad, P. E.

B. TESTS

1. Test reports on: 1) Air Infiltration Test, per FBC, TAS 202–94
   2) Uniform Static Air Pressure Test, Loading per FBC TAS 202–94
   3) Water Resistance Test, per FBC, TAS 202–94
   4) Large Missile Impact Test per FBC, TAS 201–94
   5) Cyclic Wind Pressure Loading, per FBC 2411 3.2.1, TAS 202–94

   along with installation diagram of aluminum single hung windows mulled together, prepared by Fenestration Testing Laboratory, Inc., Test Report No. **FTL–4024**, dated 01/14/04, signed and sealed by Edmundo Largaespada, P. E.
   (Submitted under previous NOA No. 04–0608.05)
2. Test reports on: 1) Air Infiltration Test, per FBC, TAS 202–94
   2) Uniform Static Air Pressure Test, Loading per FBC, TAS 202–94
   3) Water Resistance Test, per FBC, TAS 202–94
   4) Forced Entry Test, per FBC 2411.3.2.1 (b) and TAS 202–94

   along with installation diagram of aluminum fixed and casement windows mulled together, prepared by Hurricane Engineering & Testing Inc., Test Report No. **HETI–03–1346**, dated 09/16/03, signed and sealed by Rafael E. Droz–Seda, P.E.
   (Submitted under previous NOA No. 04–0608.05)

C. CALCULATIONS

1. Anchor verification calculations and structural analysis, complying with **FBC–2010**, prepared by AL–Farooq Corporation, dated 03/29/12, signed and sealed by Javad Ahmad, P. E.
2. **Glazing complies with ASTM E 1300–04**

D. QUALITY ASSURANCE

1. Miami–Dade Department of Permitting, Environment, and Regulatory Affairs (PERA).

E. MATERIAL CERTIFICATIONS

1. None.

Jaime D. Gascon, P. E.
Product Control Section Supervisor
NOA No. 12–0410.19
Expiration Date: August 19, 2014
Approval Date: June 28, 2012

NOTICE OF ACCEPTANCE: EVIDENCE SUBMITTED

F. STATEMENTS

1. Statement letter of no financial interest, conformance and compliance with the **FBC–2010**, dated 03/20/12, signed and sealed by Javad Ahmad, P. E.

G. OTHERS

1. Notice of Acceptance No. **09–0128.14**, issued to R. C. Aluminum Industries, Inc., for their Series **"ML 100 Aluminum Tube Mullion – L.M.I."**, approved on 04/08/09 and expiring on 08/19/14.

Jaime D. Gascon, P. E.
Product Control Section Supervisor
NOA No. 12–0410.19
Expiration Date: August 19, 2014
Approval Date: June 28, 2012

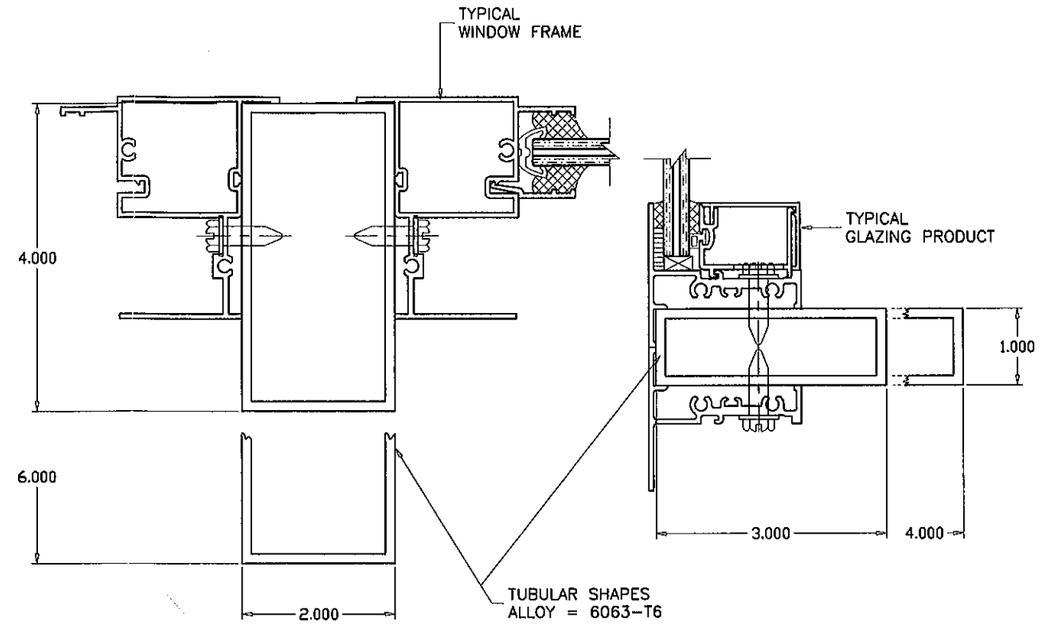

MULLION SYSTEM IS RATED FOR LARGE MISSILE IMPACT. AND CAN BE USED WITH ALL MIAMI-DADE COUNTY APPROVED IMPACT AND NON-IMPACT RESISTANT PRODUCTS.

RECTANGULAR ALUMINUM TUBE MULLIONS USING MULLION PROPERTIES ONLY

NOTES:

THIS PRODUCT HAS BEEN DESIGNED AND TESTED TO COMPLY WITH THE REQUIREMENTS OF THE FLORIDA BUILDING CODE INCLUDING HIGH VELOCITY HURRICANE ZONE (HVHZ).

ALL GLAZING PRODUCTS USED WITH THESE MULLIONS MUST MEET THE APPLICABLE BUILDING CODE REQUIREMENTS I.E: WIND LOAD, WATER INFILTRATION, FORCED ENTRY RESISTANCE, SAFEGUARDS ETC.

WOOD BUCKS BY OTHERS, MUST BE ANCHORED PROPERLY TO TRANSFER LOADS TO THE STRUCTURE.

ANCHORS SHALL BE AS LISTED, SPACED AS SHOWN ON DETAILS, EMBEDMENT TO BASE MATERIAL SHALL BE BEYOND WALL COVERING (STUCCO, TILE ETC.).

ANCHORING CONDITIONS OTHER THAN THOSE SHOWN IN THESE DETAILS ARE NOT PART OF THIS APPROVAL.

A LOAD DURATION INCREASE IS USED IN DESIGN OF ANCHORS INTO WOOD ONLY.

MATERIALS INCLUDING BUT NOT LIMITED TO STEEL/METAL SCREWS, THAT COME INTO CONTACT WITH OTHER DISSIMILAR MATERIALS SHALL MEET THE REQUIREMENTS OF THE FLORIDA BLDG. CODE SECTION 2003.8.4.

INSTRUCTIONS:

USE CHARTS AND GRAPHS AS FOLLOWS.

STEP 1 DETERMINE DESIGN LOAD REQUIRED PER ASCE 7 FOR PARTICULAR OPENING.

STEP 2 USE APPROVED GLAZING PRODUCTS MEETING ABOVE LOAD REQUIREMENTS.

STEP 3 USE CONNECTION TO MULLION AS PER PRODUCT APPROVAL.

STEP 4 USING CHARTS ON SHEET 3 SELECT MULLION SIZE WITH DESIGN RATING MORE THAN DESIGN LOAD SPECIFIED IN STEP 1 ABOVE.

STEP 5 USING ANCHOR TYPES ON SHEET 5 THRU 7 AND ANCHOR CHARTS ON SHEET 4, SELECT ANCHOR TYPE WITH DESIGN RATING MORE THAN THE DESIGN LOADS SPECIFIED IN STEP 1 ABOVE.

MULLIONS CONTAINING TYPICAL GLAZING PRODUCTS HORIZONTAL OR VERTICAL

SEE WINDOW OR DOOR APPROVAL FOR FASTENERS SIZES AND SPACING

PRODUCT REVISED
as complying with the Florida
Building Code
Acceptance No 12-0410.19
Expiration Date 08/19/2014
By
Miami Dade Product Control

Engr: JAVAD AHMAD
CIVIL
FLA. PE # 70592
C.A.N. 3538

MAR 29 2012

AL-FAROOQ CORPORATION
ENGINEERS & PRODUCT DEVELOPMENT
1235 S.W. 87 AVE
MIAMI, FLORIDA 33174
TEL. (305) 264-8100 FAX. (305) 262-6978

MULLION\M04-05RC

ALUMINUM TUBE MULLIONS

R.C. ALUMINUM INDUSTRIES INC.
2805 N.W. 75 TH AVE.
MIAMI, FL. 33122
TEL. (305) 592-1515 FAX. (305) 592-2184

revisions:

no	date	by	description
A	07.13.04		REV. PER BCCO COMMENTS
B	10.09.06		UPDATED FOR 2004 FBC
C	09.22.08		UPDATED FOR 2007 FBC
D	03.21.12		UPDATED TO 2010 FBC

date: 05-02-04
scale: 1/2" = 1"
dr. by: HAMID
chk. by:

drawing no.
M04-05

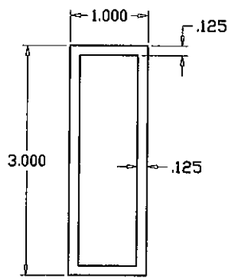

Ix IN^4	Sx IN^3
0.950	0.634

1 X 3
STD. MULLION
6063-T6

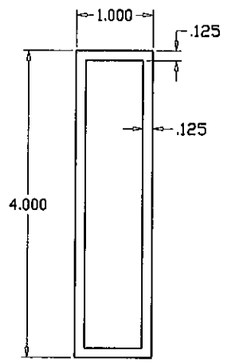

Ix IN^4	Sx IN^3
2.037	1.019

1 X 4
STD. MULLION
6063-T6

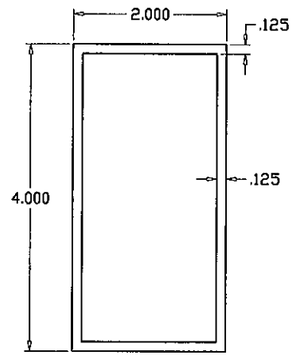

Ix IN^4	Sx IN^3
2.976	1.488

2 X 4
STD. MULLION
6063-T6

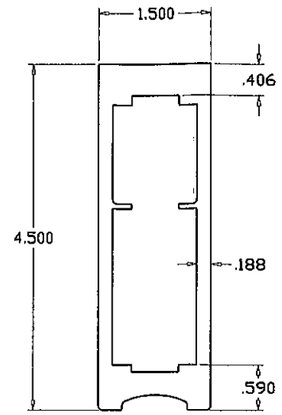

Ix IN^4	Sx IN^3
6.659	2.878

1-1/2 X 4-1/2
CUSTOM MULLION
6063-T6

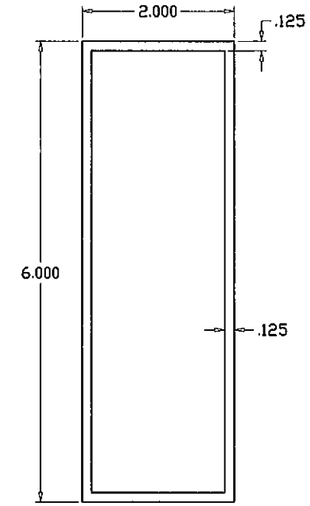

Ix IN^4	Sx IN^3
8.276	2.759

2 X 6
STD. MULLION
6063-T6

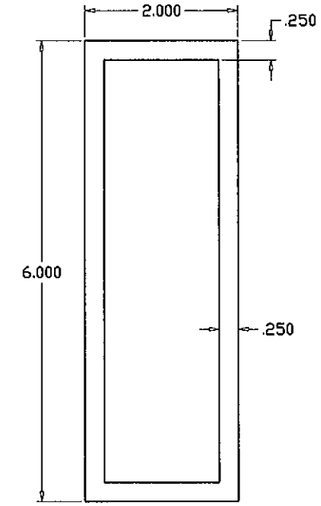

Ix IN^4	Sx IN^3
15.203	5.068

2 X 6
HEAVY MULLION
6063-T6

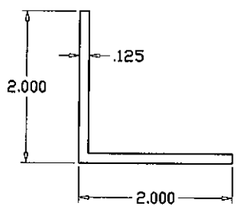

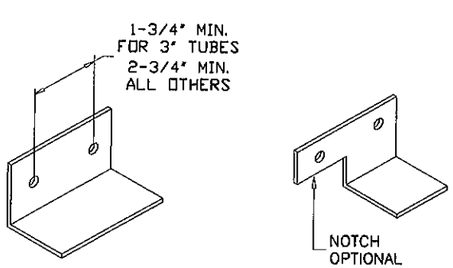

ANGLE CLIP
6063-T6

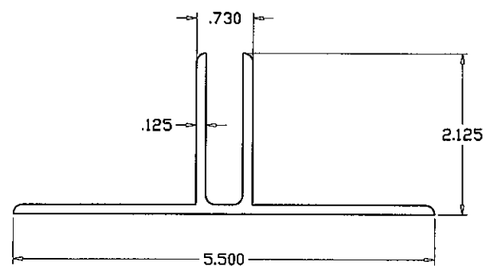

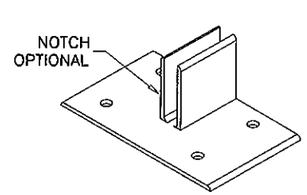

MULLION CLIP
6063-T6

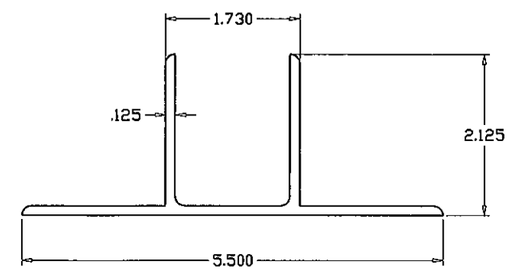

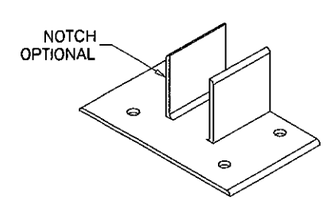

MULLION CLIP
6063-T6

PRODUCT REVISED
as complying with the Florida
Building Code
Acceptance No 12-0410.19
Expiration Date 08/19/2014
By
Miami Dade Product Control

Engr: JAVAD AHMAD
CIVIL
FLA. PE # 70592
C.A.N. 3538

MAR 29 2012

AL-FAROOQ CORPORATION
ENGINEERS & PRODUCT DEVELOPMENT
1235 S.W. 87 AVE
MIAMI, FLORIDA 33174
TEL. (305) 264-8100 FAX. (305) 262-6978

MULLION\M04-05RC

ALUMINUM TUBE MULLIONS

R.C. ALUMINUM INDUSTRIES INC.
2805 N.W. 75 TH AVE.
MIAMI, FL. 33122
TEL. (305) 592-1515 FAX. (305) 592-2184

revisions:

no	date	by	description
A	07.13.04		NO CHANGE THIS SHEET
B	10.09.06		UPDATED FOR 2004 FBC
C	09.22.08		NO CHANGE THIS SHEET
D	03.21.12		UPDATED TO 2010 FBC

date: 05-02-04
scale: 1/2" = 1"
dr. by: HAMID
chk. by:

drawing no.
M04-05

DESIGN LOAD CAPACITY - PSF (TUBE MULLIONS)

WINDOW DIMS. WIDTH (W)	MULL SPAN	1 X 3 STD.	1 X 4 STD.	2 X 4 STD.	1-1/2 X 4-1/2 CUSTOM	2 X 6 STD.	2 X 6 HEAVY
19-1/8"	38-3/8"	150.0	150.0	150.0	150.0	150.0	150.0
26-1/2"		150.0	150.0	150.0	150.0	150.0	150.0
30"		150.0	150.0	150.0	150.0	150.0	150.0
37"		150.0	150.0	150.0	150.0	150.0	150.0
42"		150.0	150.0	150.0	150.0	150.0	150.0
48"		150.0	150.0	150.0	150.0	150.0	150.0
54"		137.8	150.0	150.0	150.0	150.0	150.0
60"		124.0	150.0	150.0	150.0	150.0	150.0
66"		112.7	150.0	150.0	150.0	150.0	150.0
72"		103.3	150.0	150.0	150.0	150.0	150.0
19-1/8"	50-5/8"	150.0	150.0	150.0	150.0	150.0	150.0
26-1/2"		150.0	150.0	150.0	150.0	150.0	150.0
30"		142.5	150.0	150.0	150.0	150.0	150.0
37"		115.5	150.0	150.0	150.0	150.0	150.0
42"		101.8	150.0	150.0	150.0	150.0	150.0
48"		89.1	143.1	150.0	150.0	150.0	150.0
54"		79.2	127.2	150.0	150.0	150.0	150.0
60"		71.2	114.5	150.0	150.0	150.0	150.0
66"		64.8	104.1	150.0	150.0	150.0	150.0
72"		59.4	95.4	139.3	150.0	150.0	150.0
19-1/8"	60"	141.3	150.0	150.0	150.0	150.0	150.0
26-1/2"		102.0	150.0	150.0	150.0	150.0	150.0
30"		90.1	150.0	150.0	150.0	150.0	150.0
37"		73.0	132.2	150.0	150.0	150.0	150.0
42"		64.3	116.5	150.0	150.0	150.0	150.0
48"		56.3	101.9	148.8	150.0	150.0	150.0
54"		50.0	90.6	132.3	150.0	150.0	150.0
60"		45.0	81.5	119.0	150.0	150.0	150.0
66"		40.9	74.1	108.2	150.0	150.0	150.0
72"		37.5	67.9	99.2	150.0	150.0	150.0
19-1/8"	63"	122.1	150.0	150.0	150.0	150.0	150.0
26-1/2"		88.1	150.0	150.0	150.0	150.0	150.0
30"		77.8	147.9	150.0	150.0	150.0	150.0
37"		63.1	119.9	150.0	150.0	150.0	150.0
42"		55.6	105.6	150.0	150.0	150.0	150.0
48"		48.6	92.4	135.0	150.0	150.0	150.0
54"		43.2	82.2	120.0	150.0	150.0	150.0
60"		38.9	73.9	108.0	150.0	150.0	150.0
66"		35.4	67.2	98.2	150.0	150.0	150.0
72"		32.4	61.6	90.0	150.0	150.0	150.0

DESIGN LOAD CAPACITY - PSF (TUBE MULLIONS)

WINDOW DIMS. WIDTH (W)	MULL SPAN	1 X 3 STD.	1 X 4 STD.	2 X 4 STD.	1-1/2 X 4-1/2 CUSTOM	2 X 6 STD.	2 X 6 HEAVY
19-1/8"	74-1/4"	74.6	150.0	150.0	150.0	150.0	150.0
26-1/2"		53.8	115.4	150.0	150.0	150.0	150.0
30"		47.5	101.9	148.9	150.0	150.0	150.0
37"		38.5	82.6	120.7	150.0	150.0	150.0
42"		33.9	72.8	106.4	150.0	150.0	150.0
48"		29.7	63.7	93.1	150.0	150.0	150.0
54"		26.4	56.6	82.7	150.0	150.0	150.0
60"		23.8	51.0	74.4	150.0	144.1	150.0
66"		21.6	46.3	67.7	136.7	131.0	150.0
72"		–	42.5	62.0	125.3	120.1	150.0
19-1/8"	84"	51.5	110.4	150.0	150.0	150.0	150.0
26-1/2"		37.2	79.7	116.4	150.0	150.0	150.0
30"		32.8	70.4	102.8	150.0	150.0	150.0
37"		26.6	57.1	83.4	150.0	150.0	150.0
42"		23.4	50.3	73.5	150.0	150.0	150.0
48"		20.5	44.0	64.3	143.8	140.8	150.0
54"		–	39.1	57.1	127.8	125.1	150.0
60"		–	35.2	51.4	115.0	112.6	150.0
66"		–	32.0	46.7	104.6	102.4	150.0
72"		–	29.3	42.8	95.9	93.8	150.0
19-1/8"	96"	34.5	74.0	108.1	150.0	150.0	150.0
26-1/2"		24.9	53.4	78.0	150.0	150.0	150.0
30"		22.0	47.2	68.9	150.0	150.0	150.0
37"		–	38.2	55.9	125.0	139.8	150.0
42"		–	33.7	49.2	110.1	123.2	150.0
48"		–	29.5	43.1	96.3	107.8	150.0
54"		–	26.2	38.3	85.6	95.8	150.0
60"		–	23.6	34.4	77.1	86.2	150.0
66"		–	21.4	31.3	70.1	78.4	144.0
72"		–	–	28.7	64.2	71.8	132.0
19-1/8"	108"	24.2	51.9	75.9	150.0	150.0	150.0
26-1/2"		–	37.5	54.8	122.6	150.0	150.0
30"		–	33.1	48.4	108.3	134.5	150.0
37"		–	26.9	39.2	87.8	109.1	150.0
42"		–	23.7	34.6	77.3	96.1	150.0
48"		–	20.7	30.2	67.7	84.1	150.0
54"		–	–	26.9	60.1	74.7	137.3
60"		–	–	24.2	54.1	67.3	123.6
66"		–	–	22.0	49.2	61.2	112.3
72"		–	–	20.2	45.1	56.1	103.0

DESIGN LOAD CAPACITY - PSF (TUBE MULLIONS)

WINDOW DIMS. WIDTH (W)	MULL SPAN	1 X 3 STD.	1 X 4 STD.	2 X 4 STD.	1-1/2 X 4-1/2 CUSTOM	2 X 6 STD.	2 X 6 HEAVY
19-1/8"	120"	–	37.9	55.3	123.8	150.0	150.0
26-1/2"		–	27.3	39.9	89.3	111.0	150.0
30"		–	24.1	35.3	78.9	98.1	150.0
37"		–	–	28.6	64.0	79.5	146.1
42"		–	–	25.2	56.4	70.1	128.7
48"		–	–	22.0	49.3	61.3	112.6
54"		–	–	–	43.8	54.5	100.1
60"		–	–	–	39.5	49.0	90.1
66"		–	–	–	35.9	44.6	81.9
72"		–	–	–	32.9	40.9	75.1
19-1/8"	132"	–	28.5	41.6	93.0	115.6	150.0
26-1/2"		–	20.5	30.0	67.1	83.4	150.0
30"		–	–	26.5	59.3	73.7	135.4
37"		–	–	21.5	48.1	59.8	109.8
42"		–	–	–	42.4	52.6	96.7
48"		–	–	–	37.1	46.1	84.6
54"		–	–	–	32.9	40.9	75.2
60"		–	–	–	29.6	36.8	67.7
66"		–	–	–	27.0	33.5	61.5
72"		–	–	–	24.7	30.7	56.4
19-1/8"	144"	–	21.9	32.0	71.6	89.0	150.0
26-1/2"		–	–	23.1	51.7	64.3	118.0
30"		–	–	20.4	45.7	56.8	104.3
37"		–	–	–	37.0	46.0	84.5
42"		–	–	–	32.6	40.5	74.5
48"		–	–	–	28.5	35.5	65.2
54"		–	–	–	25.4	31.5	57.9
60"		–	–	–	22.8	28.4	52.1
66"		–	–	–	20.8	25.8	47.4
72"		–	–	–	–	23.7	43.4

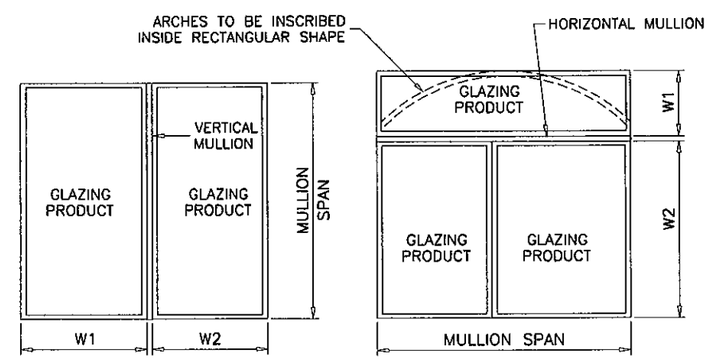

PRODUCT REVISED
as complying with the Florida
Building Code
Acceptance No 12-0410.19
Expiration Date 08/19/2014
By
Miami Dade Product Control

NOTE:
MULLIONS RATED IN THESE CHARTS MAY BE ORIENTED VERTICALLY OR HORIZONTALLY.
(INTERPOLATION BETWEEN WIDTHS ALLOWED)

TYPICAL MULLION ARRANGEMENTS

$$\text{WIDTH (W)} = \frac{W1 + W2}{2}$$

Engr: JAVAD AHMAD
CIVIL
FLA. PE # 70592
C.A.N. 3538

MAR 29 2012

MULLIONS

AL-FAROOQ CORPORATION
ENGINEERS & PRODUCT DEVELOPMENT
1235 S.W. 87 AVE
MIAMI, FLORIDA 33174
TEL. (305) 264-8100 FAX. (305) 262-6978

MULLION\M04-05RC

ALUMINUM TUBE MULLIONS

R.C. ALUMINUM INDUSTRIES INC.
2805 N.W. 75 TH AVE.
MIAMI, FL. 33122
TEL. (305) 592-1515 FAX. (305) 592-2184

(revisions:

no	date	by	description
A	07.13.04		NO CHANGE THIS SHEET
B	10.09.06		UPDATED FOR 2004 FBC
C	09.22.08		NO CHANGE THIS SHEET
D	03.21.12		NO CHANGE THIS SHEET

date: 05-02-04
scale:
dr. by: HAMID
chk. by:

drawing no.
M04-05

DESIGN LOAD CAPACITY - PSF							
WINDOW DIMS.		ANCHORS TYPE					
WIDTH (W)	MULL SPAN	A2	A4	AA2	AA4	B2	B4
19-1/8"	38-3/8"	150.0	150.0	150.0	150.0	150.0	150.0
26-1/2"		150.0	150.0	150.0	150.0	150.0	150.0
30"		150.0	150.0	150.0	150.0	150.0	150.0
37"		122.9	150.0	150.0	150.0	150.0	150.0
42"		108.3	150.0	150.0	150.0	150.0	150.0
48"		94.7	150.0	150.0	150.0	149.8	150.0
54"		84.2	150.0	150.0	150.0	133.1	150.0
60"		75.8	150.0	145.1	150.0	119.8	150.0
66"		68.9	137.8	131.9	150.0	108.9	150.0
72"		63.2	126.3	120.9	150.0	99.9	150.0
19-1/8"	50-5/8"	150.0	150.0	150.0	150.0	150.0	150.0
26-1/2"		130.1	150.0	150.0	150.0	150.0	150.0
30"		114.9	150.0	150.0	150.0	150.0	150.0
37"		93.2	150.0	150.0	150.0	147.3	150.0
42"		82.1	150.0	150.0	150.0	129.8	150.0
48"		71.8	143.6	137.5	150.0	113.5	150.0
54"		63.8	127.7	122.2	150.0	100.9	150.0
60"		57.5	114.9	110.0	150.0	90.8	150.0
66"		52.2	104.5	100.0	150.0	82.6	150.0
72"		47.9	95.8	91.7	150.0	75.7	150.0
19-1/8"	60"	150.0	150.0	150.0	150.0	150.0	150.0
26-1/2"		109.8	150.0	150.0	150.0	150.0	150.0
30"		97.0	150.0	150.0	150.0	150.0	150.0
37"		78.6	150.0	150.0	150.0	124.3	150.0
42"		69.3	138.5	132.6	150.0	109.5	150.0
48"		60.6	121.2	116.0	150.0	95.8	150.0
54"		53.9	107.7	103.1	150.0	85.2	150.0
60"		48.5	97.0	92.8	150.0	76.6	150.0
66"		44.1	88.1	84.4	150.0	69.7	139.3
72"		40.4	80.8	77.3	150.0	63.9	127.7
19-1/8"	63"	144.9	150.0	150.0	150.0	150.0	150.0
26-1/2"		104.5	150.0	150.0	150.0	150.0	150.0
30"		92.3	150.0	150.0	150.0	146.0	150.0
37"		74.9	149.7	143.3	150.0	118.4	150.0
42"		66.0	131.9	126.3	150.0	104.3	150.0
48"		57.7	115.4	110.5	150.0	91.2	150.0
54"		51.3	102.6	98.2	150.0	81.1	150.0
60"		46.2	92.3	88.4	150.0	73.0	146.0
66"		42.0	83.9	80.3	150.0	66.4	132.7
72"		38.5	77.0	73.7	147.3	60.8	121.7

DESIGN LOAD CAPACITY - PSF							
WINDOW DIMS.		ANCHORS TYPE					
WIDTH (W)	MULL SPAN	A2	A4	AA2	AA4	B2	B4
19-1/8"	74-1/4"	122.9	150.0	150.0	150.0	150.0	150.0
26-1/2"		88.7	150.0	150.0	150.0	140.2	150.0
30"		78.4	150.0	150.0	150.0	123.9	150.0
37"		63.5	127.1	121.6	150.0	100.4	150.0
42"		56.0	111.9	107.1	150.0	88.5	150.0
48"		49.0	97.9	93.7	150.0	77.4	150.0
54"		43.5	87.1	83.3	150.0	68.8	137.6
60"		39.2	78.4	75.0	150.0	61.9	123.9
66"		35.6	71.2	68.2	136.3	56.3	112.6
72"		32.6	65.3	62.5	125.0	51.6	103.2
19-1/8"	84"	108.6	150.0	150.0	150.0	150.0	150.0
26-1/2"		78.4	150.0	150.0	150.0	123.9	150.0
30"		69.3	138.5	132.6	150.0	109.5	150.0
37"		56.2	112.3	107.5	150.0	88.8	150.0
42"		49.5	98.9	94.7	150.0	78.2	150.0
48"		43.3	86.6	82.9	150.0	68.4	136.9
54"		38.5	77.0	73.7	147.3	60.8	121.7
60"		34.6	69.3	66.3	132.6	54.7	109.5
66"		31.5	63.0	60.3	120.5	49.8	99.5
72"		28.9	57.7	55.2	110.5	45.6	91.2
19-1/8"	96"	95.1	150.0	150.0	150.0	150.0	150.0
26-1/2"		68.6	137.2	131.3	150.0	108.5	150.0
30"		60.6	121.2	116.0	150.0	95.8	150.0
37"		49.1	98.3	94.1	150.0	77.7	150.0
42"		43.3	86.6	82.9	150.0	68.4	136.9
48"		37.9	75.8	72.5	145.0	59.9	119.8
54"		33.7	67.3	64.4	128.9	53.2	106.4
60"		30.3	60.6	58.0	116.0	47.9	95.8
66"		27.5	55.1	52.7	105.5	43.5	87.1
72"		25.3	50.5	48.3	96.7	39.9	79.8
19-1/8"	108"	84.5	150.0	150.0	150.0	133.6	150.0
26-1/2"		61.0	122.0	116.7	150.0	96.4	150.0
30"		53.9	107.7	103.1	150.0	85.2	150.0
37"		43.7	87.4	83.6	150.0	69.0	138.1
42"		38.5	77.0	73.7	147.3	60.8	121.7
48"		33.7	67.3	64.4	128.9	53.2	106.4
54"		29.9	59.9	57.3	114.6	47.3	94.6
60"		26.9	53.9	51.6	103.1	42.6	85.2
66"		24.5	49.0	46.9	93.7	38.7	77.4
72"		22.4	44.9	43.0	85.9	35.5	71.0

DESIGN LOAD CAPACITY - PSF							
WINDOW DIMS.		ANCHORS TYPE					
WIDTH (W)	MULL SPAN	A2	A4	AA2	AA4	B2	B4
19-1/8"	120"	76.0	150.0	145.6	150.0	120.2	150.0
26-1/2"		54.9	109.8	105.1	150.0	86.8	150.0
30"		48.5	97.0	92.8	150.0	76.6	150.0
37"		39.3	78.6	75.2	150.0	62.1	124.3
42"		34.6	69.3	66.3	132.6	54.7	109.5
48"		30.3	60.6	58.0	116.0	47.9	95.8
54"		26.9	53.9	51.6	103.1	42.6	85.2
60"		24.2	48.5	46.4	92.8	38.3	76.6
66"		22.0	44.1	42.2	84.4	34.8	69.7
72"		20.2	40.4	38.7	77.3	31.9	63.9
19-1/8"	132"	69.1	138.3	132.3	150.0	109.3	150.0
26-1/2"		49.9	99.8	95.5	150.0	78.9	150.0
30"		44.1	88.1	84.4	150.0	69.7	139.3
37"		35.7	71.5	68.4	136.8	56.5	113.0
42"		31.5	63.0	60.3	120.5	49.8	99.5
48"		27.5	55.1	52.7	105.5	43.5	87.1
54"		24.5	49.0	46.9	93.7	38.7	77.4
60"		22.0	44.1	42.2	84.4	34.8	69.7
66"		20.0	40.1	38.3	76.7	31.7	63.3
72"		18.4	36.7	35.2	70.3	29.0	58.1
19-1/8"	144"	63.4	126.7	121.3	150.0	100.2	150.0
26-1/2"		45.7	91.5	87.5	150.0	72.3	144.6
30"		40.4	80.8	77.3	150.0	63.9	127.7
37"		32.8	65.5	62.7	125.4	51.8	103.6
42"		28.9	57.7	55.2	110.5	45.6	91.2
48"		25.3	50.5	48.3	96.7	39.9	79.8
54"		22.4	44.9	43.0	85.9	35.5	71.0
60"		20.2	40.4	38.7	77.3	31.9	63.9
66"		18.4	36.7	35.2	70.3	29.0	58.1
72"		16.8	33.7	32.2	64.4	26.6	53.2

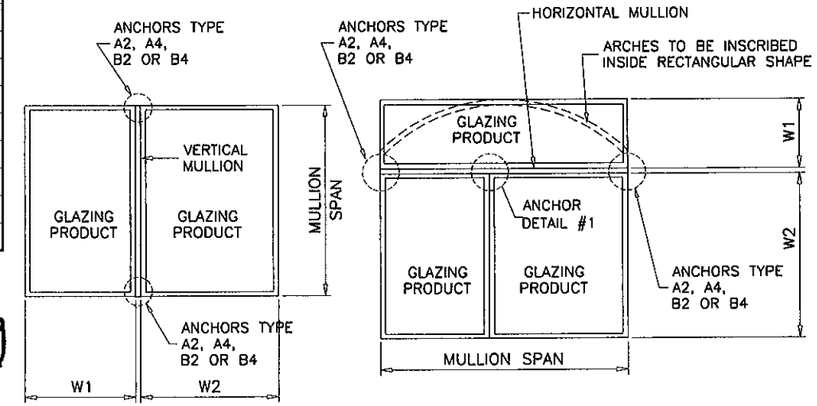

PRODUCT REVISED
as complying with the Florida
Building Code
Acceptance No 12-0410.19
Expiration Date 08/19/2014
By
Miami Dade Product Control

NOTE:
ANY ANCHOR CONDITION SHOWN HEREIN MAY COVER LOCATIONS AT HEAD, SILL OR JAMB ENDS.

FOR ANCHORS DESCRIPTION SEE SHEETS 5 THRU 7.
(INTERPOLATION BETWEEN WIDTHS OR SPANS ALLOWED)

TYPICAL MULLION ARRANGEMENTS

$$\text{WIDTH (W)} = \frac{W1 + W2}{2}$$

Engr: JAVAD AHMAD
CIVIL
FLA. PE # 70592
C.A.N. 3538

MAR 29 2012

ANCHORS

AL-FAROOQ CORPORATION
ENGINEERS & PRODUCT DEVELOPMENT
1235 S.W. 87 AVE
MIAMI, FLORIDA 33174
TEL. (305) 264-8100 FAX. (305) 262-6978

MULLION\M04-05RC

ALUMINUM TUBE MULLIONS

R.C. ALUMINUM INDUSTRIES INC.
2805 N.W. 75 TH AVE.
MIAMI, FL. 33122
TEL. (305) 592-1515 FAX. (305) 592-2184

revisions:

no	date	by	description
A	07.13.04		NO CHANGE THIS SHEET
B	10.09.06		UPDATED FOR 2004 FBC
C	09.22.08		UPDATED FOR 2007 FBC
D	03.21.12		UPDATED TO 2010 FBC

date: 05-02-04
scale:
dr. by: HAMID
chk. by:

drawing no.
M04-05

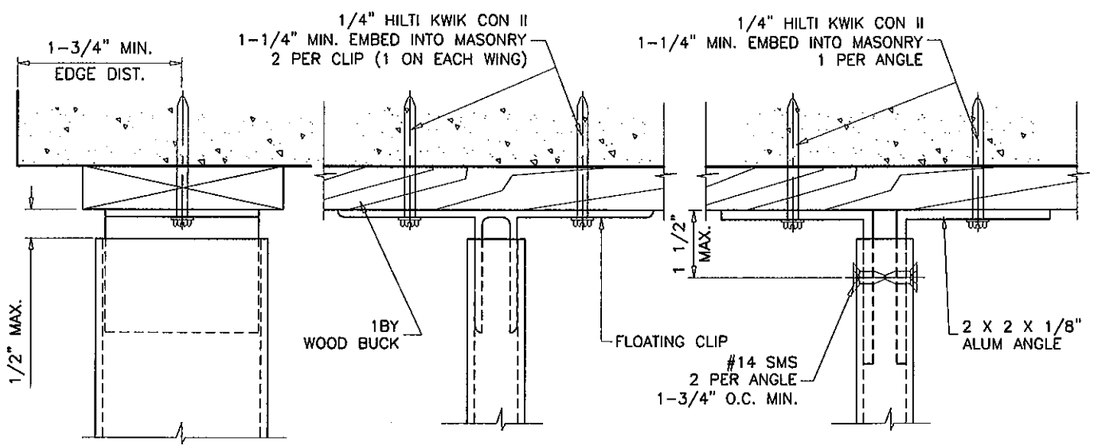

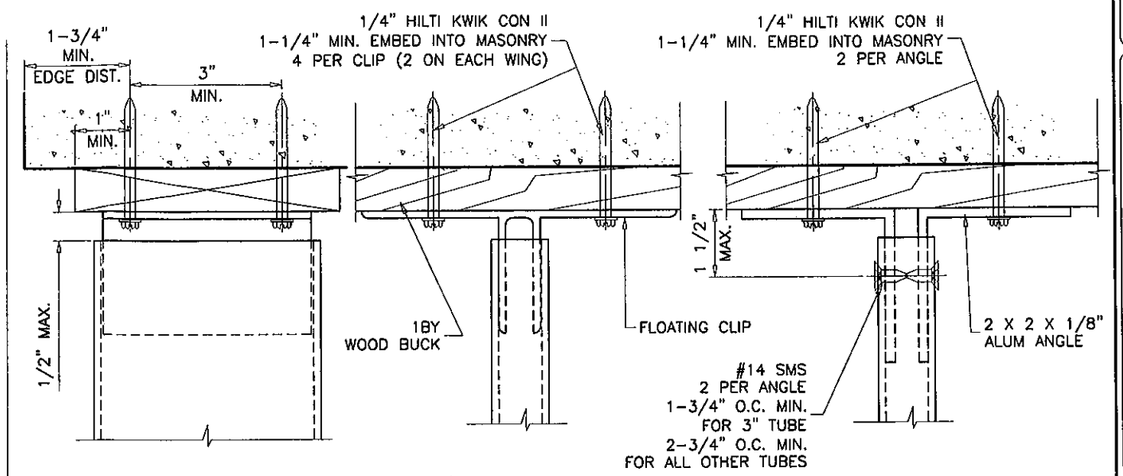

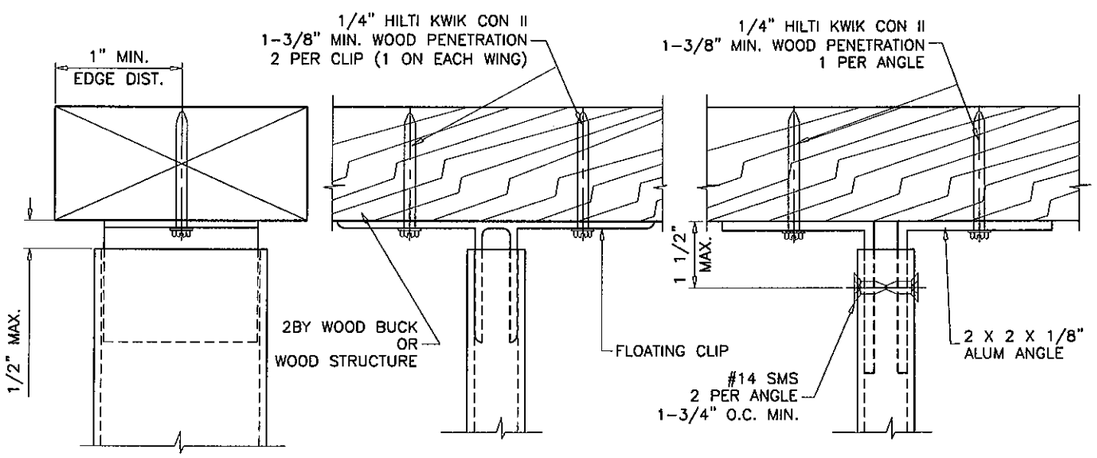

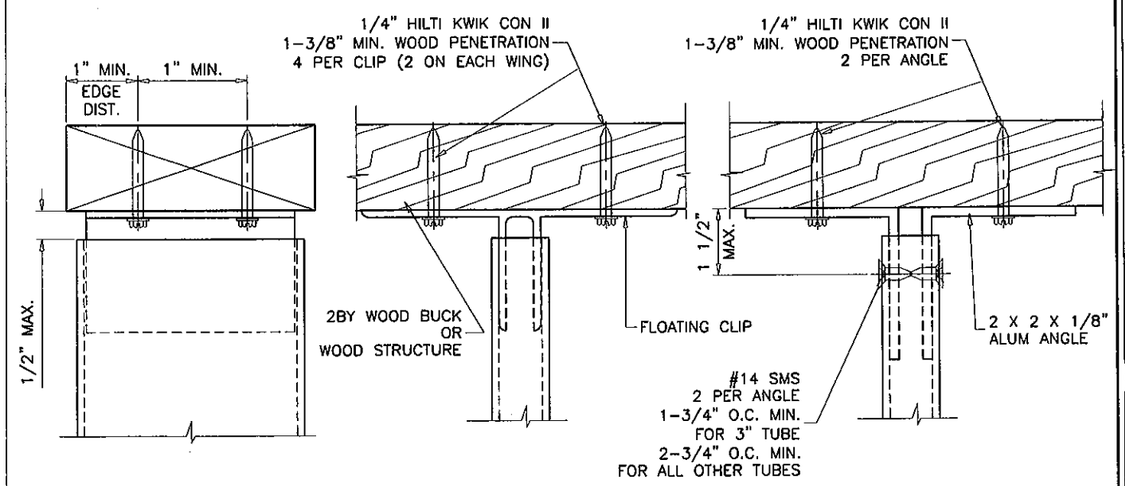

ANCHORS TYPE 'A4'

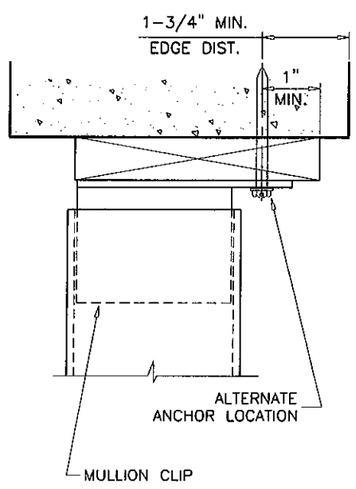

ANCHORS TYPE 'A2'

ALL CLIPS TO FIT SNUG INTO TUBE MULLIONS.
TAPCONS MAY BE HEX OR FLAT HEAD.

PRODUCT REVISED
as complying with the Florida
Building Code
Acceptance No 12-0410.19
Expiration Date 08/19/2014
By
Miami Dade Product Control

Engr: JAVAD AHMAD
CIVIL
FLA. PE # 70592
C.A.N. 3538

MAR 29 2012

AL-FAROOQ CORPORATION
ENGINEERS & PRODUCT DEVELOPMENT
1235 S.W. 87 AVE
MIAMI, FLORIDA 33174
TEL. (305) 264-8100 FAX. (305) 262-6978

MULLION\M04-05RC

ALUMINUM TUBE MULLIONS

R.C. ALUMINUM INDUSTRIES INC.
2805 N.W. 75 TH AVE.
MIAMI, FL. 33122
TEL. (305) 592-1515 FAX. (305) 592-2184

revisions:

no	date	by	description
A	07.13.04		REV. PER BCCO COMMENTS
B	10.09.06		UPDATED FOR 2004 FBC
C	09.22.08		UPDATED FOR 2007 FBC
D	03.21.12		NO CHANGE THIS SHEET

date: 05-02-04
scale: 3/8" = 1"
dr. by: HAMID
chk. by:

drawing no.
M04-05

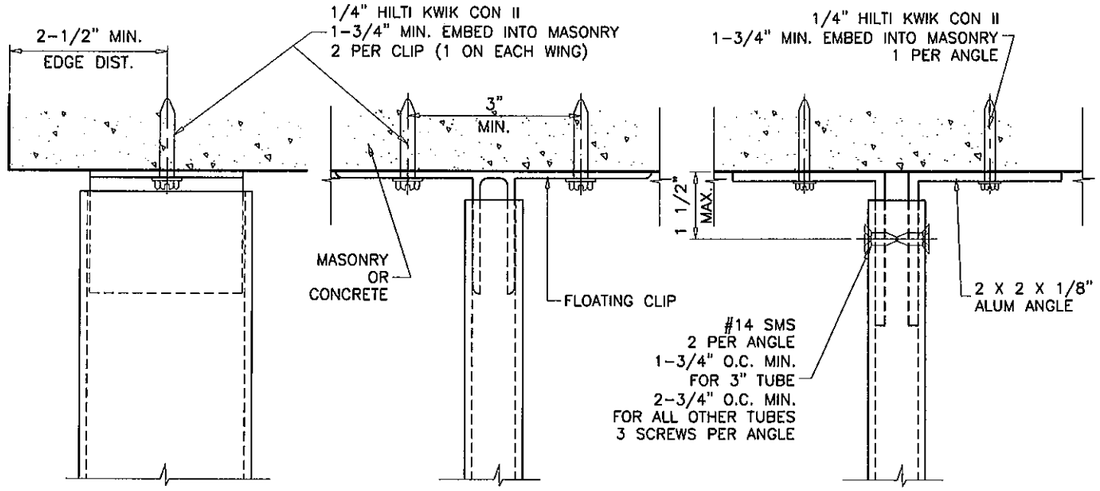

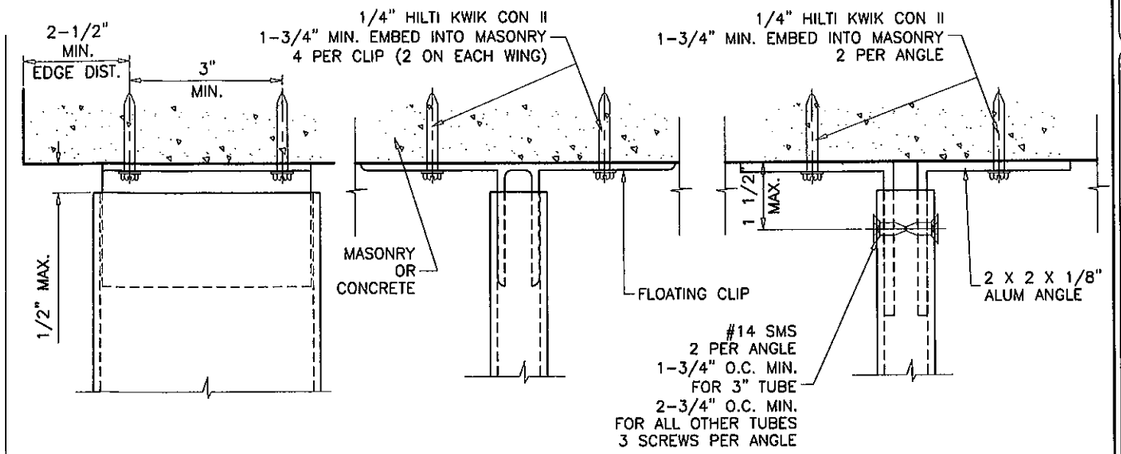

ANCHORS TYPE 'AA4'

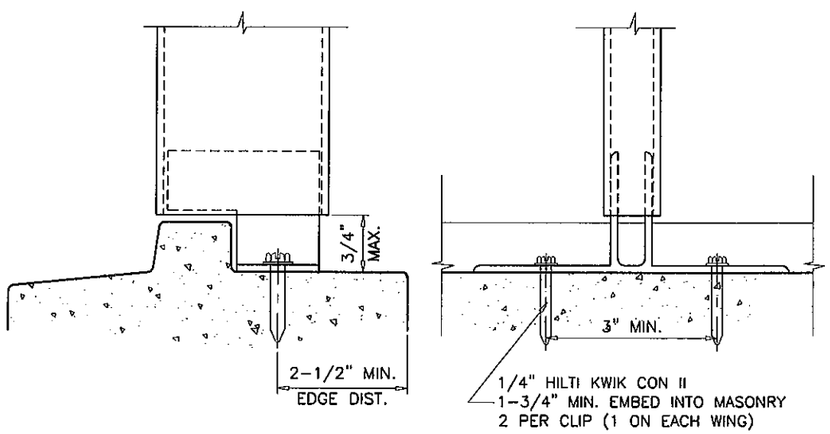

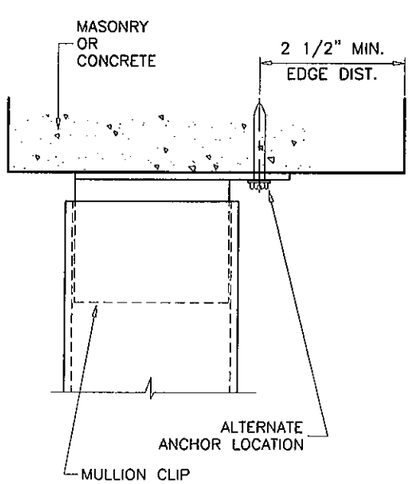

ANCHORS TYPE 'AA2'

ALL CLIPS TO FIT SNUG INTO TUBE MULLIONS.
TAPCONS MAY BE HEX OR FLAT HEAD.

CLIPS OR ANGLES CONNECTED DIRECTLY TO MASONRY TO BE PROTECTED WITH ALKALI-RESISTANT COATINGS, SUCH AS BITUMINOUS PAINT OR WATER-WHITE METHACRYLATE LACQUER.

PRODUCT REVISED
as complying with the Florida
Building Code
Acceptance No 12-0410.19
Expiration Date 08/19/2014
By
Miami Dade Product Control

Engr: JAVAD AHMAD
CIVIL
FLA. PE # 70592
C.A.N. 3538

MAR 29 2012

AL-FAROOQ CORPORATION
ENGINEERS & PRODUCT DEVELOPMENT
1235 S.W. 87 AVE
MIAMI, FLORIDA 33174
TEL. (305) 264-8100 FAX. (305) 262-6978

MULLION\M04-05RC

ALUMINUM TUBE MULLIONS

R.C. ALUMINUM INDUSTRIES INC.
2805 N.W. 75 TH AVE.
MIAMI, FL. 33122
TEL. (305) 592-1515 FAX. (305) 592-2184

revisions:

no	date	by	description
A	07.13.04		REV. PER BCCO COMMENTS
B	10.09.06		UPDATED FOR 2004 FBC
C	09.22.08		UPDATED FOR 2007 FBC
D	03.21.12		NO CHANGE THIS SHEET

date: 05-02-04
scale: 3/8" = 1"
dr. by: HAMID
chk. by:

drawing no.
M04-05

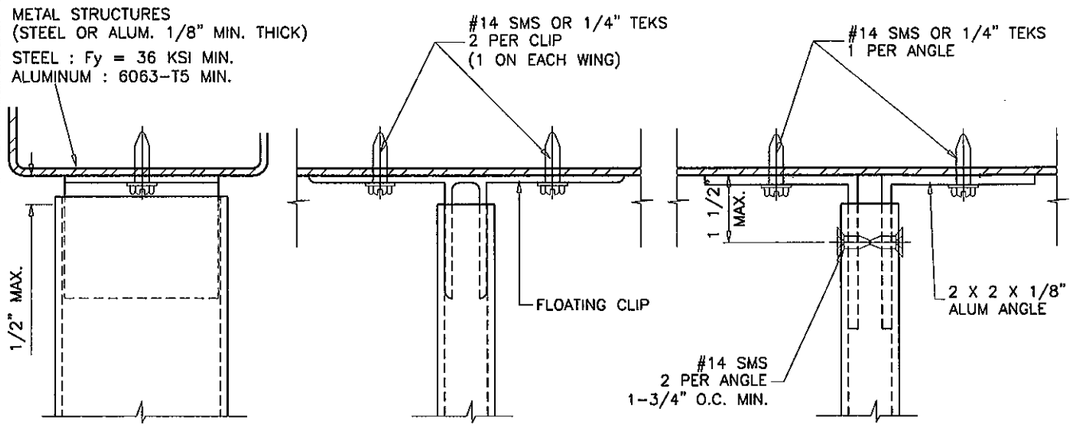

ANCHORS TYPE 'B2'

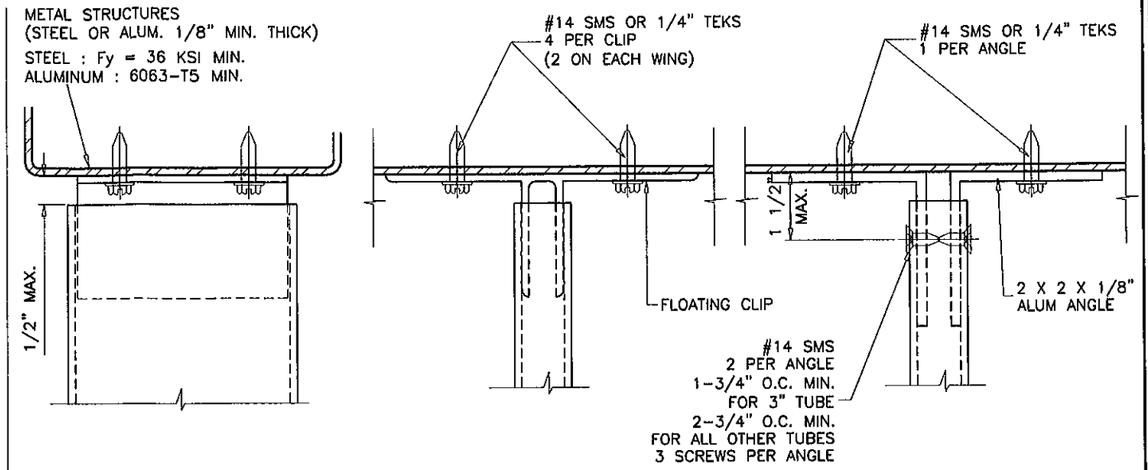

ANCHORS TYPE 'B4'

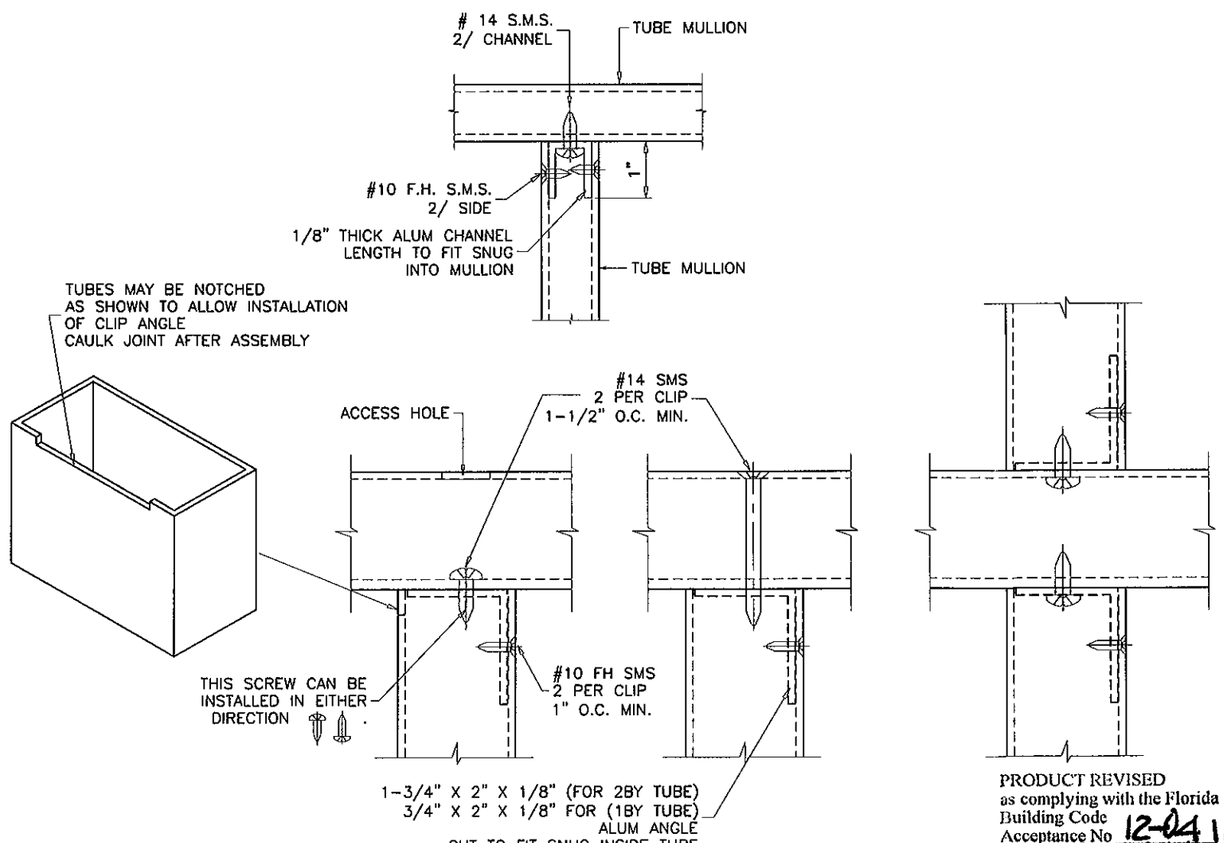

ANCHOR DETAIL #1

METAL TO METAL CONNECTION

USE CHARTS FOR ANCHOR TYPE 'B4' TO VERIFY CAPACITY OF CONNECTION

SEE SHEET 4 OF 7 FOR ANCHOR CHARTS

PRODUCT REVISED
as complying with the Florida
Building Code
Acceptance No 12-0410.19
Expiration Date 08/19/2014
By
Miami Dade Product Control

Engr: JAVAD AHMAD
CIVIL
FLA. PE # 70592
C.A.N. 3538

MAR 29 2012

AL-FAROOQ CORPORATION
ENGINEERS & PRODUCT DEVELOPMENT
1235 S.W. 87 AVE
MIAMI, FLORIDA 33174
TEL. (305) 264-8100 FAX. (305) 262-6978

MULLION\M04-05RC

ALUMINUM TUBE MULLIONS

R.C. ALUMINUM INDUSTRIES INC.
2805 N.W. 75 TH AVE.
MIAMI, FL. 33122
TEL. (305) 592-1515 FAX. (305) 592-2184

revisions:

no	date	by	description
A	07.13.04		NO CHANGE THIS SHEET
B	10.09.06		UPDATED FOR 2004 FBC
C	09.22.08		NO CHANGE THIS SHEET
D	03.21.12		NO CHANGE THIS SHEET

date: 05-02-04
scale: 3/8" = 1"
dr. by: HAMID
chk. by:

drawing no.
M04-05