MIAMI-DADE COUNTY
DEPARTMENT OF PERMITTING, ENVIRONMENT, AND REGULATORY AFFAIRS (PERA)
BOARD AND CODE ADMINISTRATION DIVISION

MIAMI–DADE COUNTY, FLORIDA
PRODUCT CONTROL SECTION
11805 SW 26 Street, Room 208
Miami, Florida 33175–2474
T (786) 315–2590 F (786) 315–2599
www.miamidade.gov/pera/

NOTICE OF ACCEPTANCE (NOA)

R. C. Aluminum Industries, Inc.
2805 NW 75th Ave
Miami, FL 33122

SCOPE:

This NOA is being issued under the applicable rules and regulations governing the use of construction materials. The documentation submitted has been reviewed and accepted by Miami–Dade County PERA–Product Control Section to be used in Miami–Dade County and other areas where allowed by the Authority Having Jurisdiction (AHJ).

This NOA shall not be valid after the expiration date stated below. The Miami–Dade County Product Control Section (In Miami–Dade County) and/or the AHJ (in areas other than Miami–Dade County) reserve the right to have this product or material tested for quality assurance purposes. If this product or material fails to perform in the accepted manner, the manufacturer will incur the expense of such testing and the AHJ may immediately revoke, modify, or suspend the use of such product or material within their jurisdiction. PERA reserves the right to revoke this acceptance, if it is determined by Miami–Dade County Product Control Section that this product or material fails to meet the requirements of the applicable building code.

This product is approved as described herein, and has been designed to comply with the Florida Building Code, including the High Velocity Hurricane Zone.

DESCRIPTION: Series "FX–345" Aluminum Window Wall System – S.M.I.

APPROVAL DOCUMENT: Drawing No. **W03–46**, titled "FX–345 Alum. Window Wall System (S.M.I.)", sheets 1 through 9 of 9, dated 06/21/03, prepared by AL–Farooq Corporation, with latest revised "**J**" dated 03/20/12, signed and sealed by Javad Ahmad, P. E., bearing the Miami–Dade County Product Control Revision stamp with the Notice of Acceptance number and Expiration date by the Miami–Dade County Product Control Section.

MISSILE IMPACT RATING: Small Missile Impact Resistant

LIMITATIONS:

1.) Glass Type "**C**" shall be installed with Mullion Reinforcement Type "**M3**" (See Sheets 4 and 5 of 9).

LABELING: Each unit shall bear a permanent label with the manufacturer's name or logo, city, state, series and following statement: "Miami–Dade County Product Control Approved" unless otherwise noted herein.

RENEWAL of this NOA shall be considered after a renewal application has been filed and there has been no change in the applicable building code negatively affecting the performance of this product.

TERMINATION of this NOA will occur after the expiration date or if there has been a revision or change in the materials, use, and/ or manufacture of the product or process. Misuse of this NOA as an endorsement of any product, for sales, advertising or any other purposes shall automatically terminate this NOA. Failure to comply with any section of this NOA shall be cause for termination and removal of NOA.

ADVERTISEMENT: The NOA number preceded by the words Miami–Dade County, Florida, and followed by the expiration date may be displayed in advertising literature. If any portion of the NOA is displayed, then it shall be done in its entirety.

INSPECTION: A copy of this entire NOA shall be provided to the user by the manufacturer or its distributors and shall be available for inspection at the job site at the request of the Building Official.

This NOA **revises NOA No. 10–1110.01** and consists of this page 1, evidence pages E–1, E–2 and E–3, as well as approval document mentioned above.

The submitted documentation was reviewed by **Jaime D. Gascon, P. E.**

MIAMI-DADE COUNTY APPROVED

J. GASCON
6/26/12

R. C. Aluminum Industries, Inc.

NOTICE OF ACCEPTANCE: EVIDENCE SUBMITTED

A. DRAWINGS

1. Manufacturer's die drawings and sections.
   (Submitted under previous NOA No. 10–1110.01)
2. Drawing No. **W03–46**, titled "FX–345 Alum. Window Wall System (S.M.I.)", sheets 1 through 9 of 9, dated 06/21/03, prepared by AL–Farooq Corporation, with latest revised "**J**" dated 03/20/12, signed and sealed by Javad Ahmad, P. E.

B. TESTS

1. Test reports on: 1) Air Infiltration Test, per FBC, TAS 202–94
   2) Uniform Static Air Pressure Test, Loading per FBC TAS 202–94
   3) Water Resistance Test, per FBC, TAS 202–94
   4) Small Missile Impact Test per FBC, TAS 201–94
   5) Cyclic Wind Pressure Loading per FBC, TAS 203–94
   6) Safety Glazing Materials Used in Buildings, per American National Standard for ANSI Z–97.1 and (CPSC 16 CFR 1201)

   along with marked–up drawings and installation diagram of aluminum window wall system, prepared by Fenestration Testing Laboratory, Inc., Test Report No. **FTL–6101**, dated 06/12/10, signed and sealed by Jorge A. Causo, P. E.
   (Submitted under previous NOA No. 10–1110.01)
2. Test reports on: 1) Safety Glazing Materials Used in Buildings, per American National Standard for, ANSI Z–97.1 and (CPSC 16 CFR 1201)

   along with marked–up and die drawings of aluminum window wall system, prepared by Fenestration Testing Laboratory, Inc., Test Report No. **FTL–5320,** dated 07/05/07, signed and sealed by Carlos S. Rionda, P. E.
   (Submitted under previous NOA No. 07–0813.04)
3. Test reports on: 1) Air Infiltration Test, per FBC, TAS 202–94
   2) Uniform Static Air Pressure Test, Loading per FBC, TAS 202–94
   3) Water Resistance Test, per FBC, TAS 202–94
   4) Small Missile Impact Test per FBC, TAS 201–94
   5) Cyclic Wind Pressure Loading per FBC, TAS 203–94

   along with marked–up drawings and installation diagram of aluminum window wall system, prepared by Fenestration Testing Laboratory, Inc., Test Report No. **FTL–4612**, dated 05/17/05, signed and sealed by Edmundo J. Largaespada, P. E.
   (Submitted under previous NOA No. 05–1214.02)
4. Test reports on: 1) Small Missile Impact Test per FBC, TAS 201–94
   2) Cyclic Wind Pressure Loading per FBC, TAS 203–94

   along with marked–up drawings and installation diagram of aluminum window wall system, prepared by Fenestration Testing Laboratory, Inc., Test Report No. **FTL–3478**, dated 07/03/02, signed and sealed by Edmundo J. Largaespada, P. E.
   (Submitted under previous NOA No. 03–1023.02)

Jaime D. Gascon, P. E.
Product Control Section Supervisor
NOA No. 12–0410.24
Expiration Date: June 10, 2014
Approval Date: July 05, 2012

NOTICE OF ACCEPTANCE: EVIDENCE SUBMITTED

B. TESTS (CONTINUED)

5. Test reports on: 1) Air Infiltration Test, per FBC, TAS 202–94
2) Uniform Static Air Pressure Test, Loading per FBC, TAS 202–94
3) Water Resistance Test, per FBC, TAS 202–94
4) Small Missile Impact Test per FBC, TAS 201–94
5) Cyclic Wind Pressure Loading per FBC, TAS 203–94
along with marked–up drawings and installation diagram of aluminum window wall system, prepared by Fenestration Testing Laboratory, Inc., Test Report No. **FTL–3719**, dated 02/26/03, signed and sealed by Joseph C. Chan, P. E.
(Submitted under previous NOA No. 04–0831.04)

6. Test reports on: 1) Air Infiltration Test, per FBC, TAS 202–94
2) Uniform Static Air Pressure Test, Loading per FBC, TAS 202–94
3) Water Resistance Test, per FBC, TAS 202–94
4) Small Missile Impact Test per FBC, TAS 201–94
5) Cyclic Wind Pressure Loading per FBC, TAS 203–94
along with marked–up drawings and installation diagram of aluminum window wall system, prepared by Fenestration Testing Laboratory, Inc., Test Report No. **FTL–3713**, dated 02/14/03, signed and sealed by Edmundo J. Largaespada, P. E.
(Submitted under previous NOA No. 04–0830.01)

7. Test reports on: 1) Small Missile Impact Test per FBC, TAS 201–94
2) Cyclic Wind Pressure Loading per FBC, TAS 203–94
along with marked–up drawings and installation diagram of aluminum window wall system, prepared by Hurricane Engineering & Testing, Inc., Test Report No. **HETI–01–1031**, dated 06/11/01, revised on 08/06/03, signed and sealed by Rafael E. Droz–Seda, P. E.
(Submitted under previous NOA No. 99–0204.07)

8. Test reports on: 1) Air Infiltration Test, per FBC, TAS 202–94
2) Uniform Static Air Pressure Test, Loading per FBC, TAS 202–94
3) Water Resistance Test, per FBC, TAS 202–94
along with marked–up drawings and installation diagram of aluminum window wall system, prepared by Hurricane Engineering & Testing, Inc., Test Report No. **HETI–01–1189**, dated 06/01/01, signed and sealed by Rafael E. Droz–Seda, P. E.
(Submitted under previous NOA No. 99–0204.07)

C. CALCULATIONS

1. Anchor verification calculations and structural analysis, complying with FBC–2007, dated 08/24/10, prepared by Al–Farooq Corporation, signed, sealed and dated 04/15/11, by Javad Ahmad, P. E.
(Submitted under previous NOA No. 10–1110.01)

2. Glazing complies with ASTM E 1300–04

Jaime D. Gascon, P. E.
Product Control Section Supervisor
NOA No. 12–0410.24
Expiration Date: June 10, 2014
Approval Date: July 05, 2012

NOTICE OF ACCEPTANCE: EVIDENCE SUBMITTED

D. QUALITY ASSURANCE

1. Miami–Dade Department of Permitting, Environment, and Regulatory Affairs (PERA).

E. MATERIAL CERTIFICATIONS

1. Notice of Acceptance No. **11–0624.01** issued to E.I. DuPont DeNemours & Co., Inc. for their "**DuPont Butacite® PVB Interlayer**" dated 09/08/2011, expiring on 12/11/2016.
2. Notice of Acceptance No. **11–1102.11** issued to Solutia Inc. for their "**Saflex Clear and Color Glass Interlayer**" dated 06/14/12, expiring on 05/21/16.

F. STATEMENTS

1. Statement letter of no financial interest, conformance and compliance with the **FBC–2010**, dated 03/20/12, signed and sealed by Javad Ahmad, P. E.
2. Proposals issued by Product Control, dated 06/06/08, signed by Jaime D. Gascon, P. E.
   (Submitted under NOA No. 09–0615.03)
3. Laboratory compliance letter for Test Report No. **FTL–6101**, issued by Fenestration Testing Laboratory, Inc., dated 06/12/10, signed and sealed by Jorge A. Causo, P. E.
   (Submitted under previous NOA No. 10–1110.01)
4. Laboratory compliance letters for Test Reports No.'s **FTL–3478**, **FTL–3713**, **FTL–3719**, **FTL–4612** and **FTL–5320** issued by Fenestration Testing Laboratory, Inc., dated 07/03/02, 02/14/03, 02/26/03, 05/17/05 and 07/05/07, signed and sealed by Edmundo J. Largaespada, P. E., Joseph C. Chan, P. E. and Carlos S. Rionda, P. E.
   (Submitted under previous NOA.'s No's. 03–1023.02, 04–0830.01, 04–0831.04, 05–1214.02 and 07–0813.04)
5. Laboratory compliance letters for Test Reports No. **HETI–01–1189** and **HETI–01–1031**, issued by Hurricane Engineering & Testing, Inc., dated 06/01/01, signed and sealed by Rafael E. Droz–Seda, P. E.
   (Submitted under previous NOA No. 99–0204.07)

G. OTHERS

1. Notice of Acceptance No. **10–1110.01**, issued to R. C. Aluminum Industries, Inc., for their Series "**FX–345 Aluminum Window Wall System – S.M.I.**", approved on 04/28/11 and expiring on 06/10/14.

Jaime D. Gascon, P. E.
Product Control Section Supervisor
NOA No. 12–0410.24
Expiration Date: June 10, 2014
Approval Date: July 05, 2012

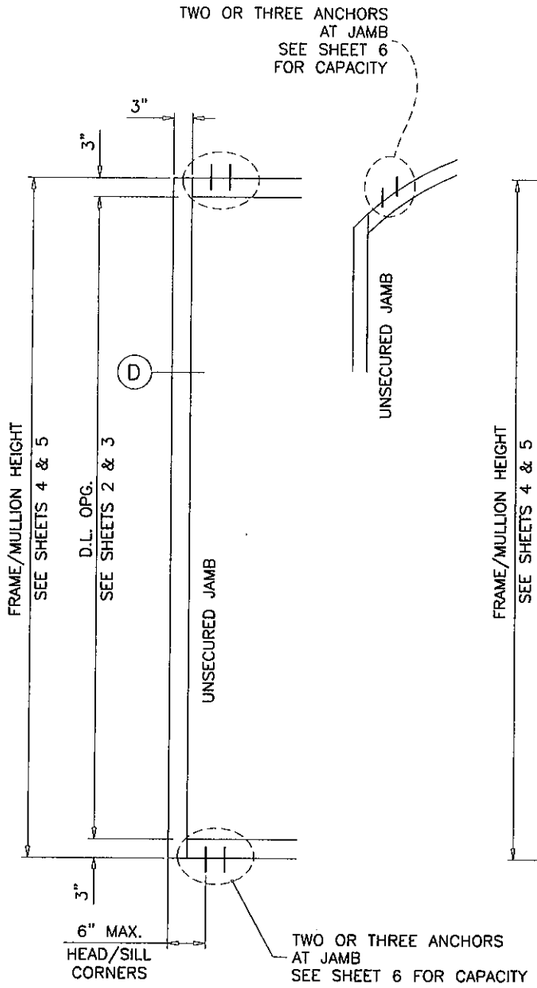

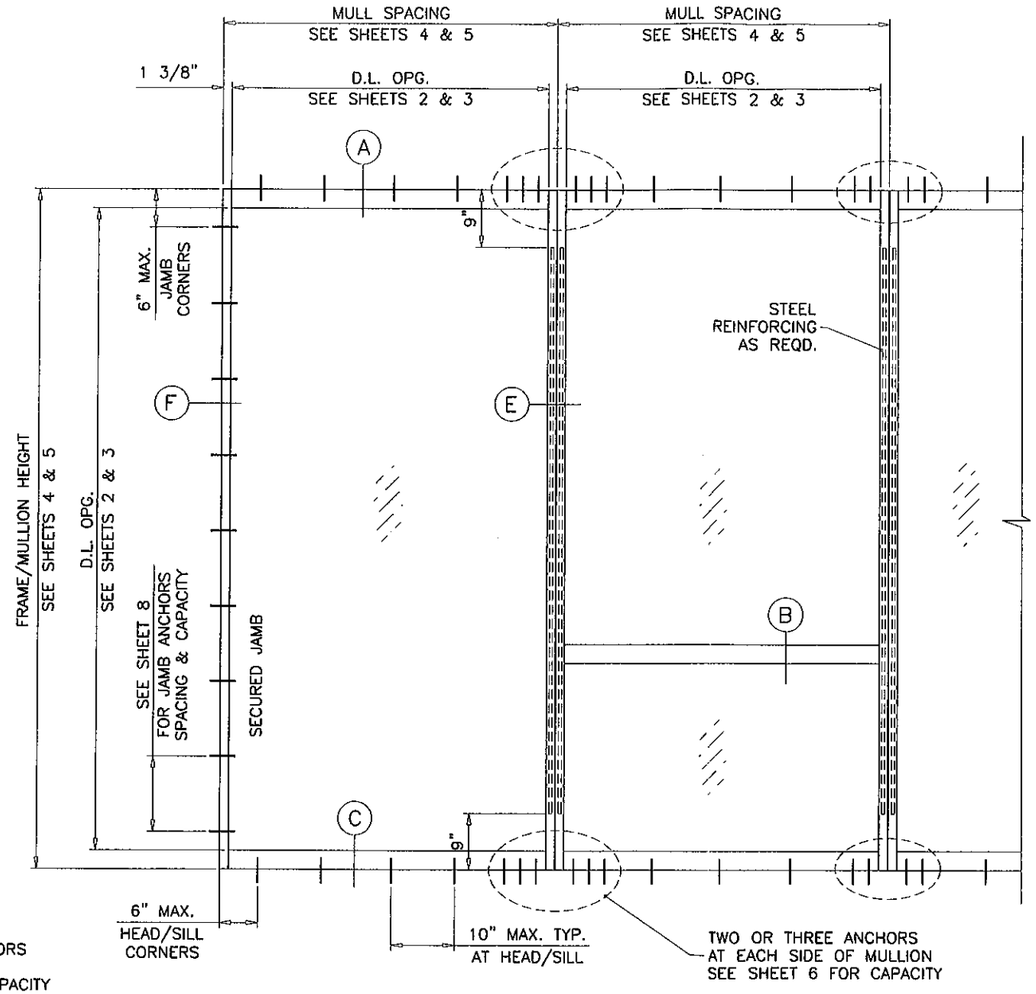

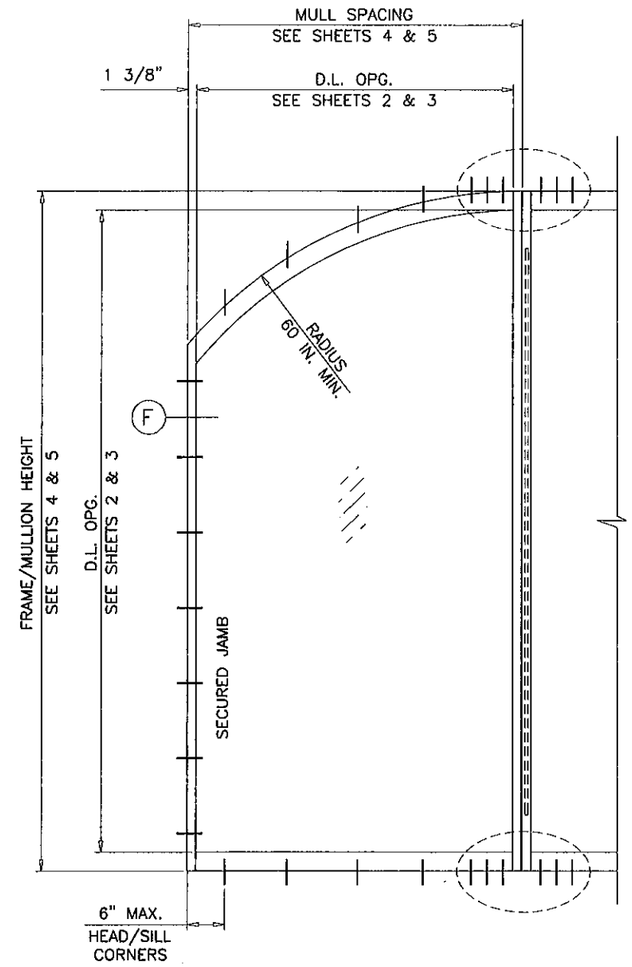

TYPICAL ELEVATION

FX-345 ALUM. WINDOW WALL SYSTEM (S.M.I.)

THIS SYSTEM IS RATED FOR SMALL MISSILE IMPACT.

MIAMI-DADE COUNTY APPROVED IMPACT RESISTANT SHUTTERS REQUIRED FOR INSTALLATIONS UP TO 30 FT. OF GRADE. SHUTTERS NOT REQUIRED FOR INSTALLATIONS ABOVE 30 FT. OF GRADE.

CODE REQUIREMENTS FOR SAFEGUARDS MUST BE OBSERVED.

THIS PRODUCT HAS BEEN DESIGNED AND TESTED TO COMPLY WITH THE REQUIREMENTS OF THE FLORIDA BUILDING CODE INCLUDING HIGH VELOCITY HURRICANE ZONE (HVHZ).

ANCHORS SHALL BE AS LISTED, SPACED AS SHOWN ON DETAILS, ANCHORS EMBEDMENT TO BASE MATERIAL SHALL BE BEYOND WALL DRESSING OR STUCCO.

ANCHORING OR LOADING CONDITIONS NOT SHOWN IN THESE DETAILS ARE NOT PART OF THIS APPROVAL.

MATERIALS INCLUDING BUT NOT LIMITED TO STEEL/METAL SCREWS, THAT COME INTO CONTACT WITH OTHER DISSIMILAR MATERIALS SHALL MEET THE REQUIREMENTS OF THE FLORIDA BLDG. CODE SECTION 2003.8.4.

INSTRUCTIONS:

USE CHARTS AS FOLLOWS.

STEP 1 DETERMINE DESIGN WIND LOAD REQUIREMENT BASED ON WIND VELOCITY, BLDG. HEIGHT, WIND ZONE USING APPLICABLE ASCE 7 STANDARD.

STEP 2 SEE CHARTS ON SHEETS 2 AND 3 FOR DESIGN LOAD CAPACITY OF DESIRED GLASS SIZE.

STEP 3 CHECK MULLION CAPACITY FOR A GIVEN SPACING AND HEIGHT USING CHARTS ON SHEETS 4 & 5 THE CAPACITY SHOULD EXCEED THE DESIGN LOAD.

STEP 4 USING CHART ON SHEET 6 SELECT ANCHOR OPTION WITH DESIGN RATING MORE THAN DESIGN LOAD SPECIFIED IN STEP 1 ABOVE.

STEP 5 FOR CAPACITY OF JAMBS WITH ANCHORS OPTION SEE CHART ON SHEET 8.

STEP 6 THE LOWEST VALUE RESULTING FROM STEPS 2, 3, 4 AND 5 SHALL APPLY TO ENTIRE SYSTEM.

PRODUCT REVISED
as complying with the Florida
Building Code
Acceptance No 12-0410.24
Expiration Date 06/10/2014
By
Miami-Dade Product Control

PRODUCT COMPLIES WITH REQUIREMENTS OF ANSI Z97.1.

LAMINATED GLASS
SMALL MISSILE IMPACT

Engr: JAVAD AHMAD
CIVIL
FLA. PE # 70592
C.A.N. 3538

MAR 2 2 2012

AL-FAROOQ CORPORATION
ENGINEERS & PRODUCT DEVELOPMENT
1235 S.W. 87 AVE
MIAMI, FLORIDA 33174
TEL. (305) 264-8100 FAX. (305) 262-6978
STORE\W03-46RC

FX-345 ALUM. WINDOW WALL SYSTEM (S.M.I.)

R.C. ALUMINUM INDUSTRIES INC.
2805 N.W. 75 TH AVE.
MIAMI, FL. 33122
TEL. (305) 592-1515 FAX. (305) 592-2184

revisions:

no	date	by	description
G	07.09.09		NO CHANGE THIS SHEET
H	09.07.10		GLASS TYPE C ADDED
I	12.21.10		REV. PER BCCO COMMENTS
J	03.20.12		UPDATED TO 2010 FBC

date: 06-21-03
scale: 1/2"=1'-0"
dr. by: HAMID
chk. by:

drawing no.
W03-46

GLASS LOAD CAPACITY - PSF

NOMINAL DIMS		GLASS TYPE 'A'	GLASS TYPE 'B'	GLASS TYPE 'C'
D.L.O. WIDTH	D.L.O. HEIGHT	EXT.(+) INT.(-)	EXT.(+) INT.(-)	EXT.(+) INT.(-)
24"	60"	143.0	105.0	101.0
27"		143.0	105.0	101.0
30"		143.0	105.0	101.0
33"		143.0	105.0	101.0
36"		143.0	105.0	101.0
39"		143.0	105.0	101.0
42"		143.0	105.0	101.0
45"		143.0	105.0	101.0
48"		143.0	105.0	101.0
51"		143.0	105.0	101.0
54"		143.0	105.0	101.0
57"		143.0	105.0	101.0
60"		143.0	105.0	101.0
63"		143.0	105.0	101.0
66"		101.0	105.0	101.0
69"		101.0	105.0	101.0
72"		101.0	105.0	101.0
24"	63"	143.0	105.0	101.0
27"		143.0	105.0	101.0
30"		143.0	105.0	101.0
33"		143.0	105.0	101.0
36"		143.0	105.0	101.0
39"		143.0	105.0	101.0
42"		143.0	105.0	101.0
45"		143.0	105.0	101.0
48"		143.0	105.0	101.0
51"		143.0	105.0	101.0
54"		143.0	105.0	101.0
57"		143.0	105.0	101.0
60"		143.0	105.0	101.0
63"		101.0	105.0	101.0
66"		101.0	105.0	101.0
69"		101.0	105.0	101.0
72"		101.0	105.0	101.0
24"	66"	143.0	105.0	101.0
27"		143.0	105.0	101.0
30"		143.0	105.0	101.0
33"		143.0	105.0	101.0
36"		143.0	105.0	101.0
39"		143.0	105.0	101.0
42"		143.0	105.0	101.0
45"		143.0	105.0	101.0
48"		143.0	105.0	101.0
51"		143.0	105.0	101.0
54"		143.0	105.0	101.0
57"		143.0	105.0	101.0
60"		101.0	105.0	101.0
63"		101.0	105.0	101.0
66"		101.0	105.0	101.0
69"		101.0	105.0	101.0
72"		101.0	105.0	101.0

GLASS LOAD CAPACITY - PSF

NOMINAL DIMS		GLASS TYPE 'A'	GLASS TYPE 'B'	GLASS TYPE 'C'
D.L.O. WIDTH	D.L.O. HEIGHT	EXT.(+) INT.(-)	EXT.(+) INT.(-)	EXT.(+) INT.(-)
24"	69"	143.0	105.0	101.0
27"		143.0	105.0	101.0
30"		143.0	105.0	101.0
33"		143.0	105.0	101.0
36"		143.0	105.0	101.0
39"		143.0	105.0	101.0
42"		143.0	105.0	101.0
45"		143.0	105.0	101.0
48"		143.0	105.0	101.0
51"		143.0	105.0	101.0
54"		143.0	105.0	101.0
57"		101.0	105.0	101.0
60"		101.0	105.0	101.0
63"		101.0	105.0	101.0
66"		101.0	105.0	101.0
69"		101.0	105.0	101.0
72"		101.0	105.0	101.0
24"	72"	143.0	105.0	101.0
27"		143.0	105.0	101.0
30"		143.0	105.0	101.0
33"		143.0	105.0	101.0
36"		143.0	105.0	101.0
39"		143.0	105.0	101.0
42"		143.0	105.0	101.0
45"		143.0	105.0	101.0
48"		143.0	105.0	101.0
51"		143.0	105.0	101.0
54"		101.0	105.0	101.0
57"		101.0	105.0	101.0
60"		101.0	105.0	101.0
63"		101.0	105.0	101.0
66"		101.0	105.0	101.0
69"		101.0	105.0	101.0
72"		101.0	X	X
24"	75"	143.0	105.0	101.0
27"		143.0	105.0	101.0
30"		143.0	105.0	101.0
33"		143.0	105.0	101.0
36"		143.0	105.0	101.0
39"		143.0	105.0	101.0
42"		143.0	105.0	101.0
45"		143.0	105.0	101.0
48"		143.0	105.0	101.0
51"		143.0	105.0	101.0
54"		101.0	105.0	101.0
57"		101.0	105.0	101.0
60"		101.0	105.0	101.0
63"		101.0	105.0	101.0
66"		101.0	105.0	101.0
69"		101.0	X	X
72"		101.0	X	X

GLASS LOAD CAPACITY - PSF

NOMINAL DIMS		GLASS TYPE 'A'	GLASS TYPE 'B'	GLASS TYPE 'C'
D.L.O. WIDTH	D.L.O. HEIGHT	EXT.(+) INT.(-)	EXT.(+) INT.(-)	EXT.(+) INT.(-)
24"	78"	143.0	105.0	101.0
27"		143.0	105.0	101.0
30"		143.0	105.0	101.0
33"		143.0	105.0	101.0
36"		143.0	105.0	101.0
39"		143.0	105.0	101.0
42"		143.0	105.0	101.0
45"		143.0	105.0	101.0
48"		143.0	105.0	101.0
51"		101.0	105.0	101.0
54"		101.0	105.0	101.0
57"		101.0	105.0	101.0
60"		101.0	105.0	101.0
63"		101.0	105.0	101.0
66"		101.0	X	X
69"		101.0	X	X
72"		101.0	X	X
24"	81"	143.0	105.0	101.0
27"		143.0	105.0	101.0
30"		143.0	105.0	101.0
33"		143.0	105.0	101.0
36"		143.0	105.0	101.0
39"		143.0	105.0	101.0
42"		143.0	105.0	101.0
45"		143.0	105.0	101.0
48"		101.0	105.0	101.0
51"		101.0	105.0	101.0
54"		101.0	105.0	101.0
57"		101.0	105.0	101.0
60"		101.0	105.0	101.0
63"		101.0	X	X
66"		101.0	X	X
69"		101.0	X	X
72"		101.0	X	X
24"	84"	143.0	105.0	101.0
27"		143.0	105.0	101.0
30"		143.0	105.0	101.0
33"		143.0	105.0	101.0
36"		143.0	105.0	101.0
39"		143.0	105.0	101.0
42"		143.0	105.0	101.0
45"		143.0	105.0	101.0
48"		101.0	105.0	101.0
51"		101.0	105.0	101.0
54"		101.0	105.0	101.0
57"		101.0	105.0	101.0
60"		101.0	105.0	101.0
63"		101.0	X	X
66"		101.0	X	X
69"		101.0	X	X

GLASS LOAD CAPACITY - PSF

NOMINAL DIMS		GLASS TYPE 'A'	GLASS TYPE 'B'	GLASS TYPE 'C'
D.L.O. WIDTH	D.L.O. HEIGHT	EXT.(+) INT.(-)	EXT.(+) INT.(-)	EXT.(+) INT.(-)
24"	87"	143.0	105.0	101.0
27"		143.0	105.0	101.0
30"		143.0	105.0	101.0
33"		143.0	105.0	101.0
36"		143.0	105.0	101.0
39"		143.0	105.0	101.0
42"		143.0	105.0	101.0
45"		101.0	105.0	101.0
48"		101.0	105.0	101.0
51"		101.0	105.0	101.0
54"		101.0	105.0	101.0
57"		101.0	105.0	101.0
60"		101.0	X	X
63"		101.0	X	X
66"		101.0	X	X
69"		101.0	X	X
24"	90"	143.0	105.0	101.0
27"		143.0	105.0	101.0
30"		143.0	105.0	101.0
33"		143.0	105.0	101.0
36"		143.0	105.0	101.0
39"		143.0	105.0	101.0
42"		143.0	105.0	101.0
45"		101.0	105.0	101.0
48"		101.0	105.0	101.0
51"		101.0	105.0	101.0
54"		101.0	105.0	101.0
57"		101.0	X	X
60"		101.0	X	X
63"		101.0	X	X
66"		101.0	X	X

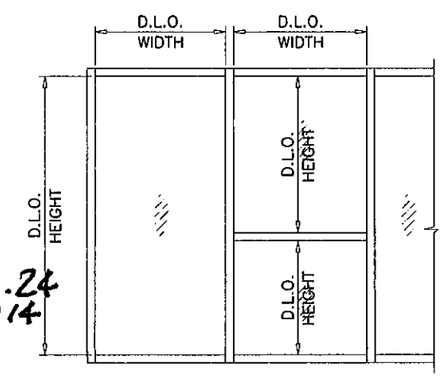

PRODUCT REVISED
as complying with the Florida
Building Code
Acceptance No 12-0410.24
Expiration Date 06/10/2014
By
Miami Dade Product Control

Engr: JAVAD AHMAD
CIVIL
FLA. PE # 70592
C.A.N. 3538

MAR 22 2012

NOTE:
GLASS CAPACITIES ON THIS SHEET ARE BASED ON ASTM E1300-04 (3 SEC. GUSTS).

AL-FAROOQ CORPORATION
ENGINEERS & PRODUCT DEVELOPMENT
1235 S.W. 87 AVE
MIAMI, FLORIDA 33174
TEL. (305) 264-8100 FAX. (305) 262-6978
STORE\W03-46RC

FX-345 ALUM. WINDOW WALL SYSTEM (S.M.I.)
R.C. ALUMINUM INDUSTRIES INC.
2805 N.W. 75 TH AVE.
MIAMI, FL. 33122
TEL. (305) 592-1515 FAX. (305) 592-2184

revisions:

no	date	by	description
G	07.09.09		NO CHANGE THIS SHEET
H	09.07.10		GLASS TYPE C ADDED
I	12.21.10		NO CHANGE THIS SHEET
J	03.20.12		NO CHANGE THIS SHEET

date: 06-21-03
scale: -
dr. by: HAMID
chk. by:

drawing no.
W03-46

GLASS LOAD CAPACITY - PSF				
NOMINAL DIMS		GLASS TYPE 'A'	GLASS TYPE 'B'	GLASS TYPE 'C'
D.L.O. WIDTH	D.L.O. HEIGHT	EXT.(+) INT.(-)	EXT.(+) INT.(-)	EXT.(+) INT.(-)
24"	93"	143.0	105.0	101.0
27"		143.0	105.0	101.0
30"		143.0	105.0	101.0
33"		143.0	105.0	101.0
36"		143.0	105.0	101.0
39"		143.0	105.0	101.0
42"		101.0	105.0	101.0
45"		101.0	105.0	101.0
48"		101.0	105.0	101.0
51"		101.0	105.0	101.0
54"		101.0	105.0	101.0
57"		101.0	X	X
60"		101.0	X	X
63"		101.0	X	X
24"	96"	143.0	105.0	101.0
27"		143.0	105.0	101.0
30"		143.0	105.0	101.0
33"		143.0	105.0	101.0
36"		143.0	105.0	101.0
39"		143.0	105.0	101.0
42"		101.0	105.0	101.0
45"		101.0	105.0	101.0
48"		101.0	105.0	101.0
51"		101.0	105.0	101.0
54"		101.0	X	X
57"		101.0	X	X
60"		101.0	X	X
24"	99"	143.0	105.0	101.0
27"		143.0	105.0	101.0
30"		143.0	105.0	101.0
33"		143.0	105.0	101.0
36"		143.0	105.0	101.0
39"		143.0	105.0	101.0
42"		101.0	105.0	101.0
45"		101.0	105.0	101.0
48"		101.0	105.0	101.0
51"		101.0	105.0	101.0
54"		101.0	X	X
57"		101.0	X	X
60"		101.0	X	X
24"	102"	143.0	105.0	101.0
27"		143.0	105.0	101.0
30"		143.0	105.0	101.0
33"		143.0	105.0	101.0
36"		143.0	105.0	101.0
39"		101.0	105.0	101.0
42"		101.0	105.0	101.0
45"		101.0	105.0	101.0
48"		101.0	105.0	101.0
51"		101.0	X	X
54"		101.0	X	X
57"		101.0	X	X

GLASS LOAD CAPACITY - PSF				
NOMINAL DIMS		GLASS TYPE 'A'	GLASS TYPE 'B'	GLASS TYPE 'C'
D.L.O. WIDTH	D.L.O. HEIGHT	EXT.(+) INT.(-)	EXT.(+) INT.(-)	EXT.(+) INT.(-)
24"	105"	143.0	105.0	101.0
27"		143.0	105.0	101.0
30"		143.0	105.0	101.0
33"		143.0	105.0	101.0
36"		143.0	105.0	101.0
39"		101.0	105.0	101.0
42"		101.0	105.0	101.0
45"		101.0	105.0	101.0
48"		101.0	105.0	101.0
51"		101.0	X	X
54"		101.0	X	X
57"		101.0	X	X
24"	108"	143.0	105.0	101.0
27"		143.0	105.0	101.0
30"		143.0	105.0	101.0
33"		143.0	105.0	101.0
36"		101.0	105.0	101.0
39"		101.0	105.0	101.0
42"		101.0	105.0	101.0
45"		101.0	105.0	101.0
48"		101.0	X	X
51"		101.0	X	X
54"		101.0	X	X
24"	111"	143.0	105.0	101.0
27"		143.0	105.0	101.0
30"		143.0	105.0	101.0
33"		143.0	105.0	101.0
36"		101.0	105.0	101.0
39"		101.0	105.0	101.0
42"		101.0	105.0	101.0
45"		101.0	105.0	101.0
48"		101.0	X	X
51"		101.0	X	X
54"		101.0	X	X
24"	114"	143.0	105.0	101.0
27"		143.0	105.0	101.0
30"		143.0	105.0	101.0
33"		143.0	105.0	101.0
36"		101.0	105.0	101.0
39"		101.0	105.0	101.0
42"		101.0	105.0	101.0
45"		101.0	X	X
48"		101.0	X	X
51"		101.0	X	X
24"	117"	143.0	105.0	101.0
27"		143.0	105.0	101.0
30"		143.0	105.0	101.0
33"		143.0	105.0	101.0
36"		101.0	105.0	101.0
39"		101.0	105.0	101.0
42"		101.0	105.0	101.0
45"		101.0	X	X
48"		101.0	X	X
51"		101.0	X	X

GLASS LOAD CAPACITY - PSF				
NOMINAL DIMS		GLASS TYPE 'A'	GLASS TYPE 'B'	GLASS TYPE 'C'
D.L.O. WIDTH	D.L.O. HEIGHT	EXT.(+) INT.(-)	EXT.(+) INT.(-)	EXT.(+) INT.(-)
24"	120"	143.0	105.0	101.0
27"		143.0	105.0	101.0
30"		143.0	105.0	101.0
33"		101.0	105.0	101.0
36"		101.0	105.0	101.0
39"		101.0	105.0	101.0
42"		101.0	X	101.0
45"		101.0	X	X
48"		101.0	X	X

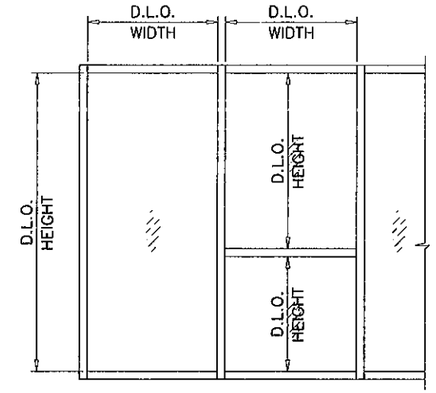

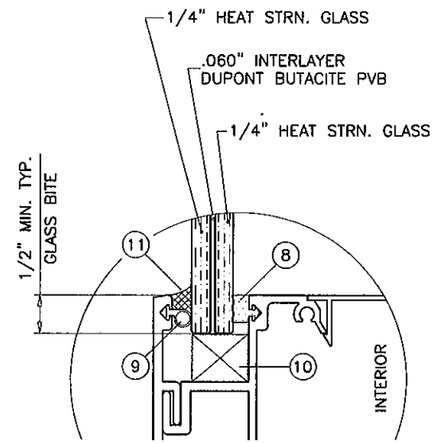

GLASS TYPE 'A'

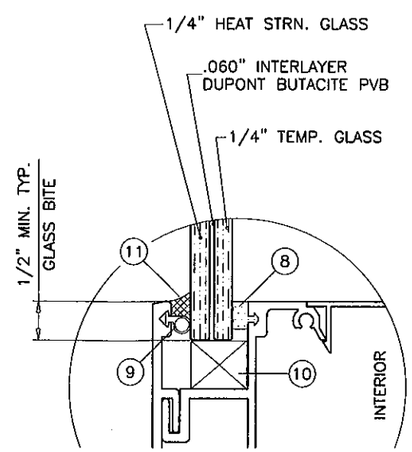

GLASS TYPE 'B'

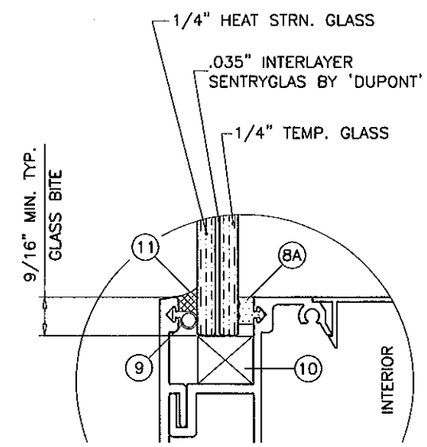

GLASS TYPE 'C'

GLAZING OPTIONS

PRODUCT REVISED
as complying with the Florida
Building Code
Acceptance No 12-0410.24
Expiration Date 06/10/2014
By
Miami Dade Product Control

Engr: JAVAD AHMAD
CIVIL
FLA. PE # 70592
C.A.N. 3538

MAR 2 2 2012

NOTE:
GLASS CAPACITIES ON THIS SHEET ARE BASED ON ASTM E1300-04 (3 SEC. GUSTS).

AL-FAROOQ CORPORATION
ENGINEERS & PRODUCT DEVELOPMENT
1235 S.W. 87 AVE
MIAMI, FLORIDA 33174
TEL. (305) 264-8100 FAX. (305) 262-6978
STORE\W03-46RC

FX-345 ALUM. WINDOW WALL SYSTEM (S.M.I.)

R.C. ALUMINUM INDUSTRIES INC.
2805 N.W. 75 TH AVE.
MIAMI, FL. 33122
TEL. (305) 592-1515 FAX. (305) 592-2184

revisions:

no	date	by	description
G	07.09.09		NO CHANGE THIS SHEET
H	09.07.10		GLASS TYPE C ADDED
I	12.21.10		REV. PER BCCO COMMENTS
J	03.20.12		UPDATED TO 2010 FBC

date: 06-21-03
scale: 1/2" = 1"
dr. by: HAMID
chk. by:

drawing no.
W03-46

sheet 3 of 9

JAMB & MULLION DESIGN LOAD CAPACITY – PSF
WITHOUT INTERMEDIATE HORIZONTALS

NOMINAL DIMS.		JAMB TYPE 'J1'	JAMB TYPE 'J2'	MULL TYPE 'M1'	MULL TYPE 'M2'	MULL TYPE 'M3'
WIDTH (W)	FRAME HEIGHT	EXT.(+) & INT.(–)	EXT.(+) & INT.(–)	EXT.(+) & INT.(–)	EXT.(+) & INT.(–)	EXT.(+) & INT.(–)
30"	60"	130.0	120.0	120.0	130.0	130.0
36"		130.0	120.0	120.0	130.0	130.0
42"		130.0	120.0	120.0	130.0	130.0
48"		130.0	120.0	120.0	130.0	130.0
54"		130.0	120.0	120.0	130.0	130.0
60"		130.0	120.0	120.0	130.0	130.0
66"		130.0	120.0	120.0	130.0	130.0
72"		130.0	120.0	120.0	130.0	130.0
30"	66"	130.0	120.0	120.0	130.0	130.0
36"		130.0	120.0	120.0	130.0	130.0
42"		130.0	120.0	120.0	130.0	130.0
48"		130.0	120.0	120.0	130.0	130.0
54"		130.0	120.0	120.0	130.0	130.0
60"		130.0	120.0	120.0	130.0	130.0
66"		130.0	120.0	120.0	130.0	130.0
72"		120.0	120.0	120.0	120.0	120.0
30"	72"	130.0	120.0	120.0	130.0	130.0
36"		130.0	120.0	120.0	130.0	130.0
42"		130.0	120.0	120.0	130.0	130.0
48"		130.0	120.0	120.0	130.0	130.0
54"		130.0	120.0	120.0	130.0	130.0
60"		130.0	120.0	120.0	130.0	130.0
66"		120.0	120.0	120.0	120.0	120.0
72"		120.0	120.0	120.0	120.0	120.0
30"	78"	130.0	120.0	120.0	130.0	130.0
36"		130.0	120.0	120.0	130.0	130.0
42"		130.0	120.0	120.0	130.0	130.0
48"		130.0	120.0	120.0	130.0	130.0
54"		130.0	120.0	120.0	130.0	130.0
60"		130.0	120.0	120.0	130.0	130.0
66"		120.0	120.0	120.0	120.0	120.0
72"		120.0	120.0	–	105.0	105.0
30"	84"	130.0	120.0	120.0	130.0	130.0
36"		130.0	120.0	120.0	130.0	130.0
42"		130.0	120.0	120.0	130.0	130.0
48"		130.0	120.0	120.0	130.0	130.0
54"		130.0	120.0	120.0	130.0	130.0
60"		120.0	120.0	116.2	116.2	116.2
66"		120.0	120.0	110.4	110.4	110.4
72"		120.0	120.0	–	–	–
30"	90"	130.0	101.0	120.0	130.0	130.0
36"		130.0	101.0	120.0	130.0	130.0
42"		130.0	101.0	120.0	130.0	130.0
48"		130.0	101.0	114.6	130.0	130.0
54"		120.0	101.0	104.8	105.0	105.0
60"		120.0	101.0	97.5	105.0	105.0
66"		120.0	–	–	–	81.0
72"		120.0	–	–	–	–
30"	96"	130.0	101.0	120.0	130.0	130.0
36"		130.0	101.0	120.0	130.0	130.0
42"		130.0	101.0	110.2	130.0	130.0
48"		130.0	101.0	98.5	130.0	130.0
54"		120.0	101.0	89.7	105.0	105.0
60"		120.0	101.0	–	105.0	105.0
66"		120.0	–	–	–	–
72"		116.1	–	–	–	–

JAMB & MULLION DESIGN LOAD CAPACITY – PSF
WITHOUT INTERMEDIATE HORIZONTALS

NOMINAL DIMS.		JAMB TYPE 'J1'	JAMB TYPE 'J2'	MULL TYPE 'M1'	MULL TYPE 'M2'	MULL TYPE 'M3'
WIDTH (W)	FRAME HEIGHT	EXT.(+) & INT.(–)	EXT.(+) & INT.(–)	EXT.(+) & INT.(–)	EXT.(+) & INT.(–)	EXT.(+) & INT.(–)
30"	102"	130.0	101.0	120.0	130.0	130.0
36"		130.0	101.0	110.2	130.0	130.0
42"		130.0	101.0	95.9	130.0	130.0
48"		120.0	101.0	85.5	105.0	105.0
54"		120.0	101.0	77.6	105.0	105.0
60"		112.8	–	–	–	–
66"		105.4	–	–	–	–
30"	108"	130.0	101.0	111.9	130.0	130.0
36"		130.0	101.0	94.5	130.0	130.0
42"		130.0	101.0	82.4	122.2	122.2
48"		118.7	101.0	73.5	105.0	105.0
54"		107.5	101.0	–	–	81.0
60"		98.8	–	–	–	–
30"	114"	130.0	101.0	94.8	130.0	130.0
36"		130.0	101.0	80.0	119.0	119.0
42"		118.8	101.0	69.6	103.6	103.6
48"		105.4	101.0	62.0	92.2	101.0
54"		95.3	–	–	–	–
60"		87.4	–	–	–	–
30"	120"	130.0	101.0	81.1	120.7	120.7
36"		116.6	101.0	68.3	101.7	101.7
42"		101.3	101.0	59.3	88.3	101.0
48"		90.0	101.0	–	78.5	101.0
54"		81.5	–	–	–	–
30"	126"	119.3	100.0	69.9	104.0	104.0
36"		100.4	100.0	58.8	87.5	87.5
42"		87.1	100.0	51.0	75.9	81.0
48"		77.3	–	–	–	81.0
54"		69.8	–	–	–	–
30"	132"	103.6	100.0	60.7	90.3	90.3
36"		87.1	100.0	51.0	75.9	81.0
42"		75.5	93.1	44.2	65.8	81.0
48"		66.9	–	–	–	–

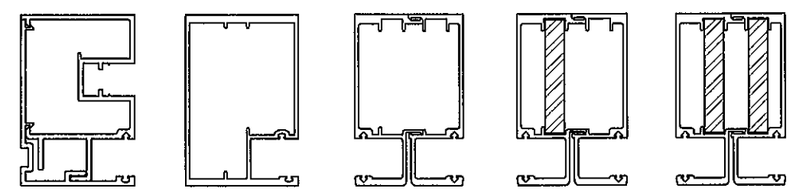

JAMB TYPE 'J1' JAMB TYPE 'J2' MULL TYPE 'M1' MULL TYPE 'M2' MULL TYPE 'M3'

PRODUCT REVISED
as complying with the Florida
Building Code
Acceptance No 12-0410.24
Expiration Date 06/10/2014
By
Miami Dade Product Control

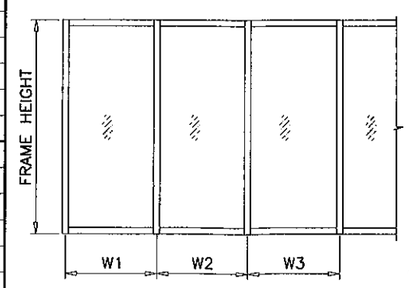

WIDTH (W) = W1
AT FRAME JAMB

WIDTH (W) = $\frac{W2 + W3}{2}$
AT FRAME MULLION

Engr: JAVAD AHMAD
CIVIL
FLA. PE # 70592
C.A.N. 3538

MAR 2 2 2012

AL-FAROOQ CORPORATION
ENGINEERS & PRODUCT DEVELOPMENT
1235 S.W. 87 AVE
MIAMI, FLORIDA 33174
TEL. (305) 264-8100 FAX. (305) 262-6978
STORE\W03-46RC

FX-345 ALUM. WINDOW WALL SYSTEM (S.M.I.)

R.C. ALUMINUM INDUSTRIES INC.
2805 N.W. 75 TH AVE.
MIAMI, FL. 33122
TEL. (305) 592-1515 FAX. (305) 592-2184

revisions:

no	date	by	description
G	07.09.09		NO CHANGE THIS SHEET
H	09.07.10		CHART REVISED
I	12.21.10		NO CHANGE THIS SHEET
J	03.20.12		NO CHANGE THIS SHEET

date: 06-21-03
scale: 1/2"=1'-0"
dr. by: HAMID
chk. by:

drawing no.
W03-46

JAMB & MULLION DESIGN LOAD CAPACITY – PSF
WITH INTERMEDIATE HORIZONTALS

NOMINAL DIMS.		JAMB TYPE 'J1'	JAMB TYPE 'J2'	MULL TYPE 'M1'	MULL TYPE 'M2'	MULL TYPE 'M3'
WIDTH (W)	FRAME HEIGHT	EXT.(+) & INT.(–)	EXT.(+) & INT.(–)	EXT.(+) & INT.(–)	EXT.(+) & INT.(–)	EXT.(+) & INT.(–)
30"	60"	130.0	120.0	120.0	130.0	130.0
36"		130.0	120.0	120.0	130.0	130.0
42"		130.0	120.0	120.0	130.0	130.0
48"		130.0	120.0	120.0	130.0	130.0
54"		130.0	120.0	120.0	130.0	130.0
60"		130.0	120.0	120.0	130.0	130.0
66"		130.0	120.0	120.0	130.0	130.0
72"		130.0	120.0	120.0	130.0	130.0
30"	66"	130.0	120.0	120.0	130.0	130.0
36"		130.0	120.0	120.0	130.0	130.0
42"		130.0	120.0	120.0	130.0	130.0
48"		130.0	120.0	120.0	130.0	130.0
54"		130.0	120.0	120.0	130.0	130.0
60"		130.0	120.0	120.0	130.0	130.0
66"		130.0	120.0	120.0	130.0	130.0
72"		120.0	120.0	120.0	120.0	120.0
30"	72"	130.0	120.0	120.0	130.0	130.0
36"		130.0	120.0	120.0	130.0	130.0
42"		130.0	120.0	120.0	130.0	130.0
48"		130.0	120.0	120.0	130.0	130.0
54"		130.0	120.0	120.0	130.0	130.0
60"		130.0	120.0	120.0	130.0	130.0
66"		120.0	120.0	120.0	120.0	120.0
72"		120.0	120.0	112.0	112.0	112.0
30"	78"	130.0	120.0	120.0	130.0	130.0
36"		130.0	120.0	120.0	130.0	130.0
42"		130.0	120.0	120.0	130.0	130.0
48"		130.0	120.0	120.0	130.0	130.0
54"		130.0	120.0	120.0	130.0	130.0
60"		130.0	120.0	113.2	130.0	130.0
66"		120.0	120.0	102.9	105.0	105.0
72"		120.0	120.0	–	105.0	105.0
30"	84"	130.0	120.0	120.0	130.0	130.0
36"		130.0	120.0	120.0	130.0	130.0
42"		130.0	120.0	120.0	130.0	130.0
48"		130.0	120.0	120.0	130.0	130.0
54"		130.0	120.0	107.3	130.0	130.0
60"		120.0	120.0	96.5	105.0	105.0
66"		120.0	120.0	87.8	105.0	105.0
72"		120.0	120.0	–	–	–
30"	90"	130.0	101.0	120.0	130.0	130.0
36"		130.0	101.0	120.0	130.0	130.0
42"		130.0	101.0	118.9	130.0	130.0
48"		130.0	101.0	104.0	130.0	130.0
54"		120.0	101.0	92.4	105.0	105.0
60"		120.0	101.0	83.2	105.0	105.0
66"		117.6	–	–	–	81.0
72"		107.8	–	–	–	–
30"	96"	130.0	101.0	120.0	130.0	130.0
36"		130.0	101.0	120.0	130.0	130.0
42"		130.0	101.0	103.4	130.0	130.0
48"		130.0	101.0	90.5	128.7	128.7
54"		120.0	101.0	80.4	105.0	105.0
60"		113.3	101.0	–	102.9	102.9
66"		103.0	–	–	–	–
72"		94.4	–	–	–	–

JAMB & MULLION DESIGN LOAD CAPACITY – PSF
WITH INTERMEDIATE HORIZONTALS

NOMINAL DIMS.		JAMB TYPE 'J1'	JAMB TYPE 'J2'	MULL TYPE 'M1'	MULL TYPE 'M2'	MULL TYPE 'M3'
WIDTH (W)	FRAME HEIGHT	EXT.(+) & INT.(–)	EXT.(+) & INT.(–)	EXT.(+) & INT.(–)	EXT.(+) & INT.(–)	EXT.(+) & INT.(–)
30"	102"	130.0	101.0	120.0	130.0	130.0
36"		130.0	101.0	105.7	130.0	130.0
42"		130.0	101.0	90.6	130.0	130.0
48"		120.0	101.0	79.3	105.0	105.0
54"		111.1	101.0	70.5	101.3	101.3
60"		100.0	–	–	–	–
66"		90.9	–	–	–	–
30"	108"	130.0	101.0	108.7	130.0	130.0
36"		130.0	101.0	90.6	130.0	130.0
42"		127.0	101.0	77.7	115.6	115.6
48"		111.1	101.0	68.0	101.1	101.1
54"		98.8	–	–	–	81.0
60"		88.9	–	–	–	–
30"	114"	130.0	101.0	92.4	130.0	130.0
36"		130.0	101.0	77.0	114.6	114.6
42"		112.7	101.0	66.0	98.2	101.0
48"		98.6	101.0	57.8	86.0	101.0
54"		87.7	–	–	–	–
60"		78.9	–	–	–	–
30"	120"	130.0	101.0	79.3	117.9	117.9
36"		112.8	101.0	66.1	98.3	101.0
42"		96.6	101.0	56.6	84.2	101.0
48"		84.6	101.0	–	73.7	97.9
54"		75.2	–	–	–	–
30"	126"	116.9	100.0	68.5	101.9	101.9
36"		97.4	100.0	57.1	84.9	84.9
42"		83.5	100.0	48.9	72.8	81.0
48"		73.1	–	–	–	81.0
54"		64.9	–	–	–	–
30"	132"	101.7	100.0	59.6	88.6	88.6
36"		84.7	100.0	49.6	73.8	81.0
42"		72.6	89.6	42.5	63.3	81.0
48"		63.5	–	–	–	–

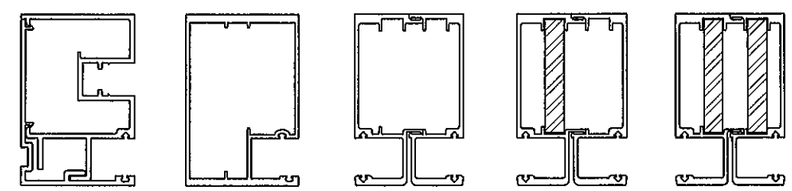

JAMB TYPE 'J1' JAMB TYPE 'J2' MULL TYPE 'M1' MULL TYPE 'M2' MULL TYPE 'M3'

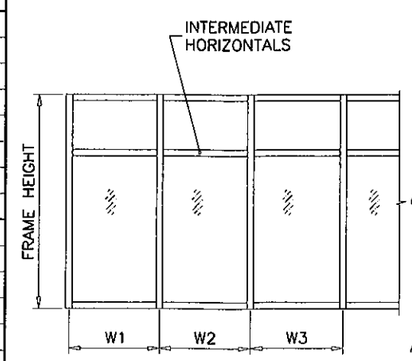

WIDTH (W) = W1
AT FRAME JAMB

WIDTH (W) = $\frac{W2 + W3}{2}$
AT FRAME MULLION

PRODUCT REVISED
as complying with the Florida
Building Code
Acceptance No 12-0410.24
Expiration Date 06/10/2014
By
Miami Dade Product Control

Engr: JAVAD AHMAD
CIVIL
FLA. PE # 70592
C.A.N. 3538

MAR 2 2 2012

AL-FAROOQ CORPORATION
ENGINEERS & PRODUCT DEVELOPMENT
1235 S.W. 87 AVE
MIAMI, FLORIDA 33174
TEL (305) 264-3100 FAX. (305) 262-6978
STORE\W03-46RC

FX-345 ALUM. WINDOW WALL SYSTEM (S.M.I.)
R.C. ALUMINUM INDUSTRIES INC.
2805 N.W. 75 TH AVE.
MIAMI, FL. 33122
TEL. (305) 592-1515 FAX. (305) 592-2184

revisions:

no	date	by	description
G	07.09.09		NO CHANGE THIS SHEET
H	09.07.10		CHART REVISED
I	12.21.10		NO CHANGE THIS SHEET
J	03.20.12		NO CHANGE THIS SHEET

date: 06-21-03
scale: 1/2"=1'-0"
dr. by: HAMID
chk. by:

drawing no.
W03-46

ANCHOR DESIGN LOAD CAPACITY – PSF

NOMINAL DIMS.		2 ANCHORS @ EACH SIDE OF JAMB OR MULL				3 ANCHORS @ EACH SIDE OF JAMB OR MULL			
		3/8" MAX. SHIM SPACE		5/8" MAX. SHIM SPACE		3/8" MAX. SHIM SPACE		5/8" MAX. SHIM SPACE	
		TYPE 'A'	TYPE 'B'	TYPE 'A'	TYPE 'B'	TYPE 'A'	TYPE 'B'	TYPE 'A'	TYPE 'B'
WIDTH (W)	FRAME HEIGHT	EXT. (+) INT. (-)	EXT. (+) INT. (-)	EXT. (+) INT. (-)	EXT. (+) INT. (-)	EXT. (+) INT. (-)	EXT. (+) INT. (-)	EXT. (+) INT. (-)	EXT. (+) INT. (-)
30"	60"	130.0	130.0	130.0	112.8	130.0	130.0	130.0	130.0
36"		130.0	130.0	130.0	94.0	130.0	130.0	130.0	130.0
42"		130.0	116.5	130.0	80.6	130.0	130.0	130.0	120.8
48"		130.0	101.9	128.3	70.5	130.0	130.0	130.0	105.7
54"		130.0	90.6	114.0	62.7	130.0	130.0	130.0	94.0
60"		130.0	81.5	102.6	56.4	130.0	122.3	130.0	84.6
66"		130.0	74.1	93.3	51.3	130.0	111.2	130.0	76.9
72"		123.8	67.9	85.5	47.0	130.0	101.9	128.3	70.5
30"	66"	130.0	130.0	130.0	102.5	130.0	130.0	130.0	130.0
36"		130.0	123.5	130.0	85.5	130.0	130.0	130.0	128.1
42"		130.0	105.9	130.0	73.2	130.0	130.0	130.0	109.8
48"		130.0	92.6	116.6	64.1	130.0	130.0	130.0	96.1
54"		130.0	82.3	103.7	57.0	130.0	123.6	130.0	85.4
60"		130.0	74.1	93.3	51.3	130.0	111.2	130.0	76.9
66"		122.8	67.4	84.8	46.6	130.0	101.1	127.2	69.9
72"		112.5	61.8	77.8	42.7	130.0	92.7	116.6	64.1
30"	72"	130.0	130.0	130.0	94.0	130.0	130.0	130.0	130.0
36"		130.0	113.2	130.0	78.3	130.0	130.0	130.0	117.4
42"		130.0	97.0	122.2	67.1	130.0	130.0	130.0	100.7
48"		130.0	84.9	106.9	58.8	130.0	127.4	130.0	88.1
54"		130.0	75.5	95.0	52.2	130.0	113.3	130.0	78.3
60"		123.8	67.9	85.5	47.0	130.0	101.9	128.3	70.5
66"		112.5	61.8	77.8	42.7	130.0	92.7	116.6	64.1
72"		103.2	56.6	71.3	39.2	130.0	84.9	106.9	58.7
30"	78"	130.0	125.4	130.0	86.8	130.0	130.0	130.0	130.0
36"		130.0	104.5	130.0	72.3	130.0	130.0	130.0	108.4
42"		130.0	89.6	112.8	62.0	130.0	130.0	130.0	92.9
48"		130.0	78.4	98.7	54.2	130.0	117.6	130.0	81.3
54"		127.0	69.7	87.7	48.2	130.0	104.5	130.0	72.3
60"		114.3	62.7	79.0	43.4	130.0	94.1	118.4	65.0
66"		103.9	57.0	71.8	39.4	130.0	85.5	107.6	59.1
72"		95.2	52.3	65.8	36.2	130.0	78.4	98.7	54.2
30"	84"	130.0	116.5	130.0	80.6	130.0	130.0	130.0	120.8
36"		130.0	97.0	122.2	67.1	130.0	130.0	130.0	100.7
42"		130.0	83.2	104.7	57.6	130.0	124.8	130.0	86.3
48"		130.0	72.8	91.6	50.4	130.0	109.2	130.0	75.5
54"		117.9	64.7	81.5	44.8	130.0	97.1	122.2	67.1
60"		106.1	58.2	73.3	40.3	130.0	87.4	109.9	60.4
66"		96.5	52.9	66.6	36.6	130.0	79.4	99.9	54.9
72"		88.4	48.5	61.1	33.6	130.0	72.8	91.6	50.3
30"	90"	130.0	108.7	130.0	75.2	130.0	130.0	130.0	112.7
36"		130.0	90.6	114.0	62.7	130.0	130.0	130.0	94.0
42"		130.0	77.6	97.8	53.7	130.0	116.5	130.0	80.5
48"		123.8	67.9	85.5	47.0	130.0	101.9	128.3	70.5
54"		110.0	60.4	76.0	41.8	130.0	90.6	114.0	62.6
60"		99.0	54.3	68.4	37.6	130.0	81.5	102.6	56.4
66"		90.0	49.4	62.2	34.2	130.0	74.1	93.3	51.2
72"		82.5	45.3	57.0	31.3	123.8	68.0	85.5	47.0
30"	96"	130.0	101.9	128.3	70.5	130.0	130.0	130.0	105.7
36"		130.0	84.9	106.9	58.8	130.0	127.4	130.0	88.1
42"		130.0	72.8	91.6	50.4	130.0	109.2	130.0	75.5
48"		116.1	63.7	80.2	44.1	130.0	95.6	120.3	66.1
54"		103.2	56.6	71.3	39.2	130.0	84.9	106.9	58.7
60"		92.9	51.0	64.2	35.3	130.0	76.5	96.2	52.9
66"		84.4	46.3	58.3	32.0	126.6	69.5	87.5	48.0
72"		77.4	42.5	53.5	29.4	116.0	63.7	80.2	44.0

ANCHOR DESIGN LOAD CAPACITY – PSF

NOMINAL DIMS.		2 ANCHORS @ EACH SIDE OF JAMB OR MULL				3 ANCHORS @ EACH SIDE OF JAMB OR MULL			
		3/8" MAX. SHIM SPACE		5/8" MAX. SHIM SPACE		3/8" MAX. SHIM SPACE		5/8" MAX. SHIM SPACE	
		TYPE 'A'	TYPE 'B'	TYPE 'A'	TYPE 'B'	TYPE 'A'	TYPE 'B'	TYPE 'A'	TYPE 'B'
WIDTH (W)	FRAME HEIGHT	EXT. (+) INT. (-)	EXT. (+) INT. (-)	EXT. (+) INT. (-)	EXT. (+) INT. (-)	EXT. (+) INT. (-)	EXT. (+) INT. (-)	EXT. (+) INT. (-)	EXT. (+) INT. (-)
30"	102"	130.0	95.9	120.8	66.4	130.0	130.0	130.0	99.5
36"		130.0	79.9	100.6	55.3	130.0	119.9	130.0	82.9
42"		124.8	68.5	86.3	47.4	130.0	102.8	129.3	71.1
48"		109.2	59.9	75.5	41.5	130.0	89.9	113.2	62.2
54"		97.1	53.3	67.1	36.9	130.0	79.9	100.6	55.3
60"		87.4	48.0	60.4	33.2	130.0	72.0	90.5	49.7
66"		79.4	43.6	54.9	30.2	119.1	65.4	82.3	45.2
30"	108"	130.0	90.6	114.0	62.7	130.0	130.0	130.0	94.0
36"		130.0	75.5	95.0	52.2	130.0	113.3	130.0	78.3
42"		117.9	64.7	81.5	44.8	130.0	97.1	122.2	67.1
48"		103.2	56.6	71.3	39.2	130.0	84.9	106.9	58.7
54"		91.7	50.3	63.4	34.8	130.0	75.5	95.0	52.2
60"		82.5	45.3	57.0	31.3	123.8	68.0	85.5	47.0
30"	114"	130.0	85.8	108.0	59.4	130.0	128.8	130.0	89.0
36"		130.0	71.5	90.0	49.5	130.0	107.3	130.0	74.2
42"		111.7	61.3	77.2	42.4	130.0	92.0	115.7	63.6
48"		97.7	53.6	67.5	37.1	130.0	80.5	101.3	55.6
54"		86.9	47.7	60.0	33.0	130.0	71.5	90.0	49.5
60"		78.2	42.9	54.0	29.7	117.3	64.4	81.0	44.5
30"	120"	130.0	81.5	102.6	56.4	130.0	122.3	130.0	84.6
36"		123.8	67.9	85.5	47.0	130.0	101.9	128.3	70.5
42"		106.1	58.2	73.3	40.3	130.0	87.4	109.9	60.4
48"		92.9	51.0	64.2	35.3	130.0	76.5	96.2	52.9
54"		82.5	45.3	57.0	31.3	123.8	68.0	85.5	47.0
30"	126"	130.0	77.6	97.8	53.7	130.0	116.5	130.0	80.5
36"		117.9	64.7	81.5	44.8	130.0	97.1	122.2	67.1
42"		101.1	55.5	69.8	38.4	130.0	83.2	104.7	57.5
48"		88.4	48.5	61.1	33.6	130.0	72.8	91.6	50.3
54"		78.6	43.1	54.3	29.8	117.9	64.7	81.4	44.7
30"	132"	130.0	74.1	93.3	51.3	130.0	111.2	130.0	76.9
36"		112.5	61.8	77.8	42.7	130.0	92.7	116.6	64.1
42"		96.5	52.9	66.6	36.6	130.0	79.4	99.9	54.9
48"		84.4	46.3	58.3	32.0	126.6	69.5	87.5	48.0

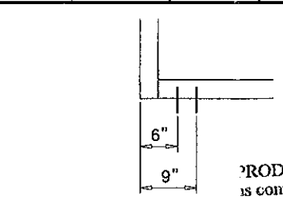

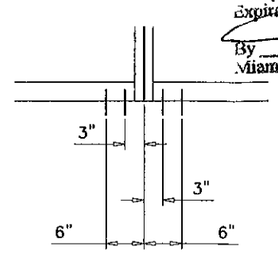

TWO ANCHORS AT EACH SIDE OF MULLION OR JAMB

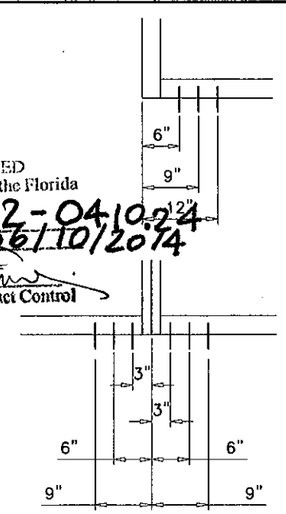

THREE ANCHORS AT EACH SIDE OF MULLION OR JAMB

PRODUCT REVISED
is complying with the Florida
Building Code
Acceptance No. 12-0410.24
Expiration Date 06/10/2014
By
Miami Dade Product Control

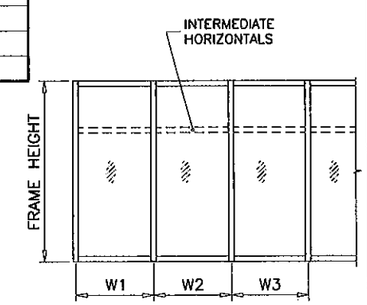

WIDTH (W) = W1
AT FRAME JAMB

WIDTH (W) = $\frac{W2 + W3}{2}$
AT FRAME MULLION

Engr: JAVAD AHMAD
CIVIL
FLA. PE # 70592
C.A.N. 3538

MAR 2 2 2012

AL-FAROOQ CORPORATION
ENGINEERS & PRODUCT DEVELOPMENT
1235 S.W. 87 AVE
MIAMI, FLORIDA 33174
TEL. (305) 264-8100 FAX. (305) 262-6978

STORE\W03-46RC

FX-345 ALUM. WINDOW WALL SYSTEM (S.M.I.)

R.C. ALUMINUM INDUSTRIES INC.
2805 N.W. 75 TH AVE.
MIAMI, FL. 33122
TEL. (305) 592-1515 FAX. (305) 592-2184

revisions:

no	date	by	description
G	07.09.09		NO CHANGE THIS SHEET
H	09.07.10		NO CHANGE THIS SHEET
I	12.21.10		NO CHANGE THIS SHEET
J	03.20.12		NO CHANGE THIS SHEET

date: 06-21-03
scale: 1/2"=1'-0"
dr. by: HAMID
chk. by:

drawing no.
W03-46

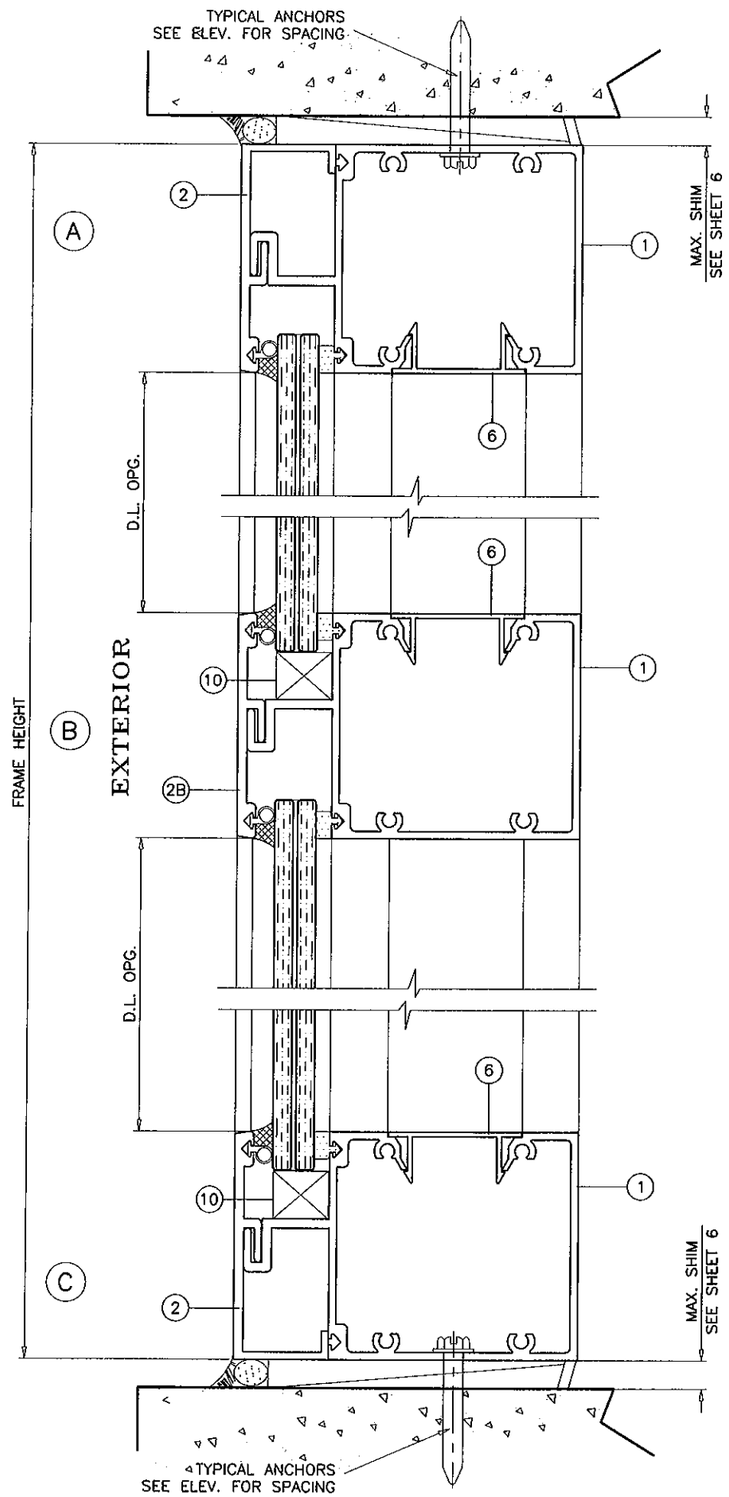

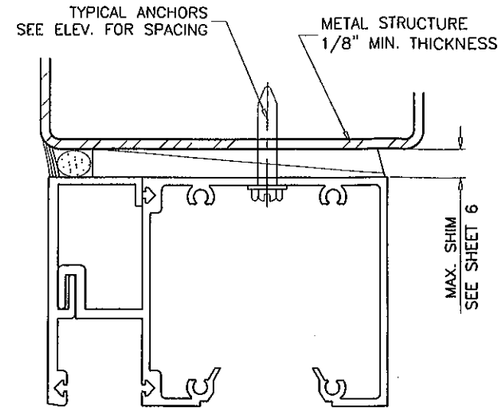

METAL STRUCTURES NOT BY RC ALUMINUM MUST SUPPORT LOADS IMPOSED BY GLAZING SYSTEM AND TRANSFER THEM TO THE BUILDING STRUCTURE.

TYPICAL ANCHORS: SEE ELEV. FOR SPACING

TYPE 'A'– 1/4" HILTI KWIK-CON II (Fu=163 KSI, Fy=157 KSI)

DIRECTLY INTO CONCRETE
1–5/8" MIN. EMBED INTO CONCRETE

TYPE 'B'– 1/4" HILTI KWIK-FLEX SELF DRILLING SCREWS (Fu=92 KSI, Fy=120 KSI)

INTO METAL STRUCTURES
STEEL : 1/8" THK. MIN. (Fy = 36 KSI MIN.)
ALUMINUM : 1/8" THK. MIN. (6063–T6 MIN.)
(STEEL IN CONTACT WITH ALUMINUM TO BE PLATED OR PAINTED)

ANCHOR EDGE DISTANCES

INTO CONCRETE = 2–1/2" MIN.
INTO METAL STRUCTURE = 3/4" MIN.

CONCRETE f'c = 3000 PSI MIN.
MASONRY f'm = 1600 PSI MIN.

SEALANTS:

ALL FRAME CORNERS AND MULLION SEAMS SEALED WITH DOW CORNING 795 SILICONE.

PRODUCT REVISED
as complying with the Florida
Building Code
Acceptance No 12-0410.24
Expiration Date 06/10/2014
By
Miami Dade Product Control

Engr: JAVAD AHMAD
CIVIL
FLA. PE # 70592
C.A.N. 3538

MAR 22 2012

AL-FAROOQ CORPORATION
ENGINEERS & PRODUCT DEVELOPMENT
1235 S.W. 87 AVE
MIAMI, FLORIDA 33174
TEL. (305) 264-8100 FAX. (305) 262-6978

STORE\W03-46RC

FX-345 ALUM. WINDOW WALL SYSTEM (S.M.I.)

R.C. ALUMINUM INDUSTRIES INC.
2805 N.W. 75 TH AVE.
MIAMI, FL. 33122
TEL. (305) 592-1515 FAX. (305) 592-2184

revisions:

no	date	by	description
G	07.09.09		SEALANT REV.
H	09.07.10		GLAZING GASKET REV.
I	12.21.10		NO CHANGE THIS SHEET
J	03.20.12		NO CHANGE THIS SHEET

date: 06-21-03
scale: 1/2" = 1"
dr. by: HAMID
chk. by:

drawing no.
W03-46

sheet 7 of 9

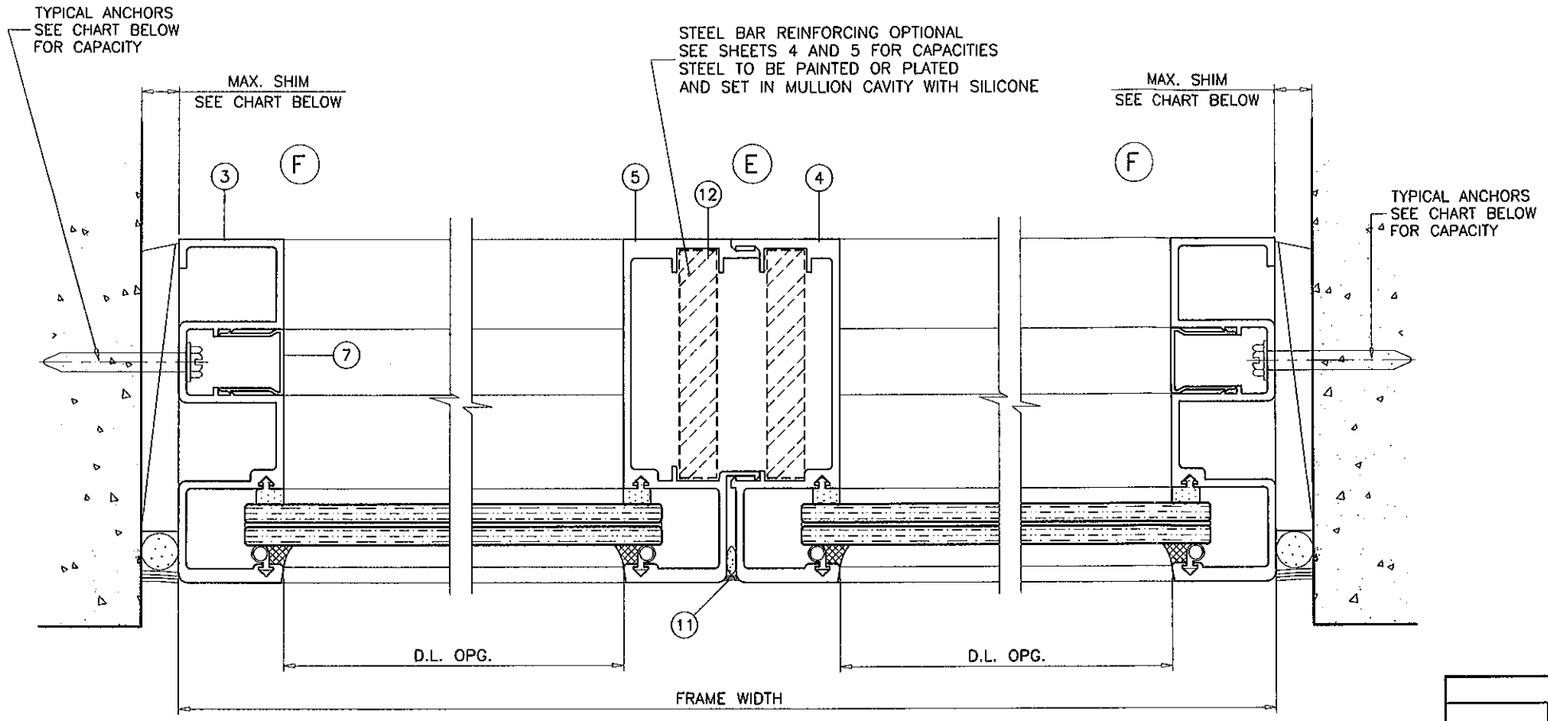

EXTERIOR

JAMB WITH FRAME ANCHORS

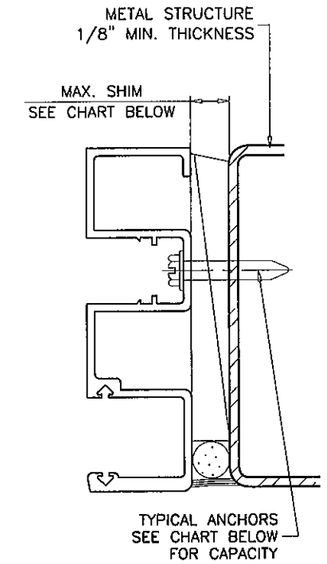

JAMB ANCHORS DESIGN LOAD CAPACITY - PSF						
	12" O.C. MAX. SPACING				6" O.C. MAX. SPACING	
	3/8" MAX. SHIM SPACE		5/8" MAX. SHIM SPACE		5/8" MAX. SHIM SPACE	
WIDTH (W)	TYPE 'A' EXT. (+) INT. (-)	TYPE 'B' EXT. (+) INT. (-)	TYPE 'A' EXT. (+) INT. (-)	TYPE 'B' EXT. (+) INT. (-)	TYPE 'A' EXT. (+) INT. (-)	TYPE 'B' EXT. (+) INT. (-)
30"	143.0	143.0	143.0	141.0	143.0	143.0
36"	143.0	143.0	143.0	117.0	143.0	143.0
42"	143.0	143.0	143.0	101.0	143.0	143.0
48"	143.0	128.0	143.0	88.0	143.0	143.0
54"	143.0	113.0	143.0	78.0	143.0	143.0
60"	143.0	102.0	128.0	70.0	143.0	141.0
66"	143.0	93.0	117.0	64.0	143.0	128.0
72"	143.0	85.0	107.0	59.0	143.0	117.0

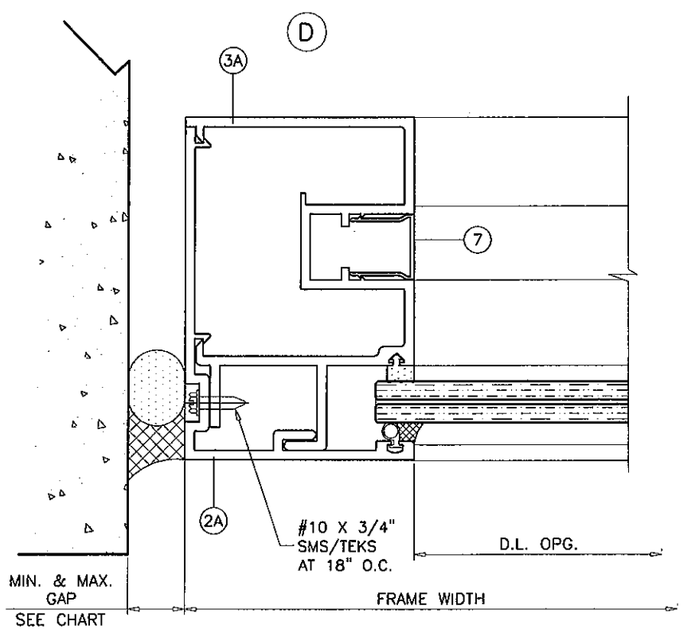

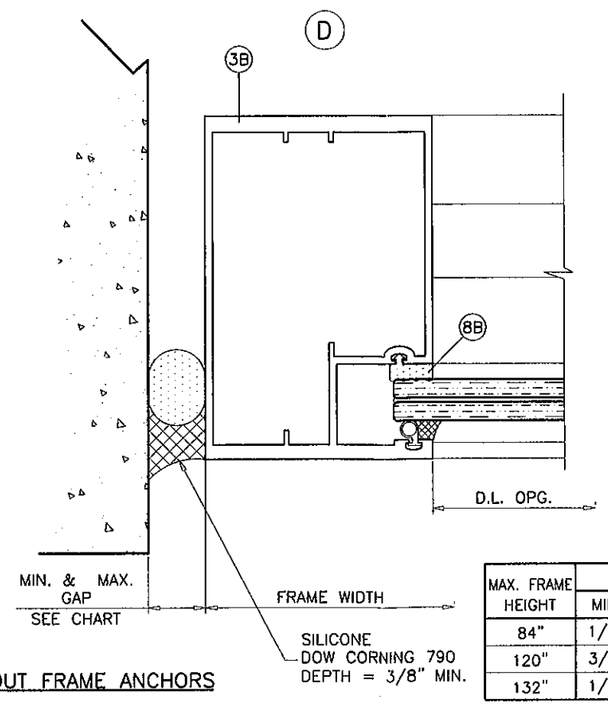

OPTIONAL JAMBS WITHOUT FRAME ANCHORS

MAX. FRAME HEIGHT	GAP	
	MIN.	MAX.
84"	1/4"	3/4"
120"	3/8"	3/4"
132"	1/2"	3/4"

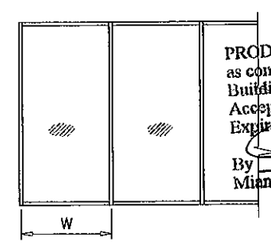

PRODUCT REVISED
as complying with the Florida
Building Code
Acceptance No 12-0410.24
Expiration Date 06/10/2014
By
Miami Dade Product Control

Engr: JAVAD AHMAD
CIVIL
FLA. PE # 70592
C.A.N. 3538

MAR 2 2 2012

AL-FAROOQ CORPORATION
ENGINEERS & PRODUCT DEVELOPMENT
1235 S.W. 87 AVE
MIAMI, FLORIDA 33174
TEL. (305) 264-8100 FAX. (305) 262-6978
STORE\W03-46RC

FX-345 ALUM. WINDOW WALL SYSTEM (S.M.I.)

R.C. ALUMINUM INDUSTRIES INC.
2805 N.W. 75 TH AVE.
MIAMI, FL. 33122
TEL. (305) 592-1515 FAX. (305) 592-2184

revisions:

no	date	by	description
G	07.09.09		NO CHANGE THIS SHEET
H	09.07.10		GLAZING GASKET REV.
I	12.21.10		REV. PER BCCO COMMENTS
J	03.20.12		NO CHANGE THIS SHEET

date: 06-21-03
scale: 1/2" = 1"
dr. by: HAMID
chk. by:

drawing no.
W03-46

sheet 8 of 9

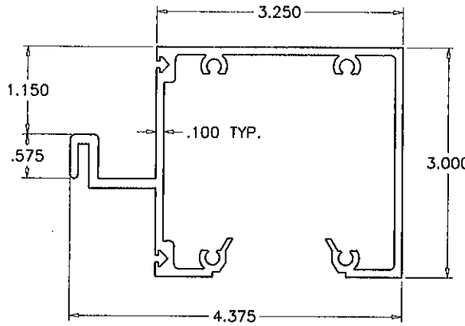

1 FRAME HEAD/SILL

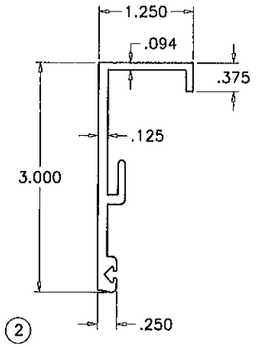

2 GLAZING RETAINER HEAD/SILL

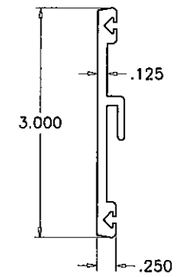

2B GLAZING RETAINER HORIZONTAL

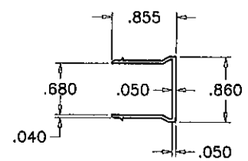

7 SNAP-IN COVER JAMB

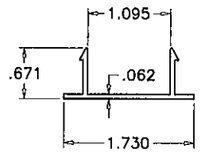

6 SNAP-IN COVER HEAD/SILL

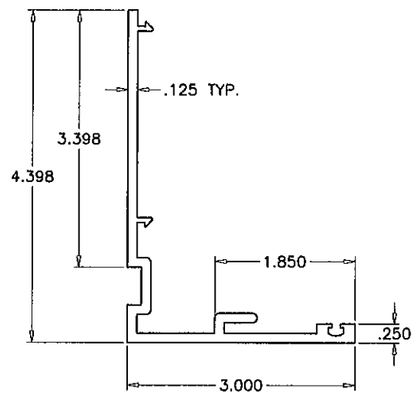

2A GLAZING RETAINER JAMB

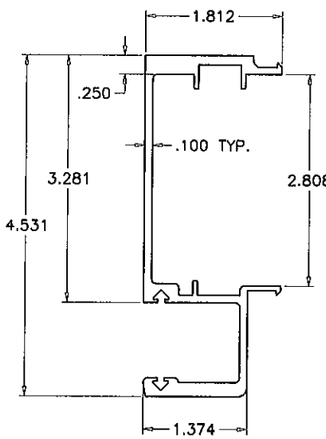

5 MALE MULLION

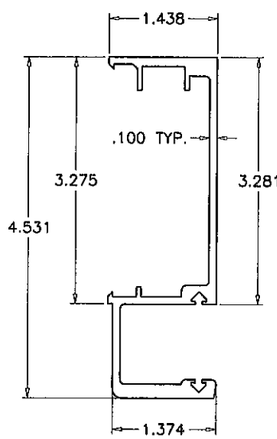

4 FEMALE MULLION

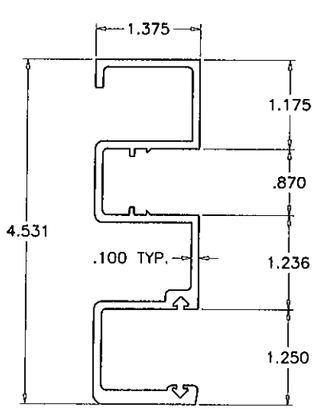

3 FRAME JAMB

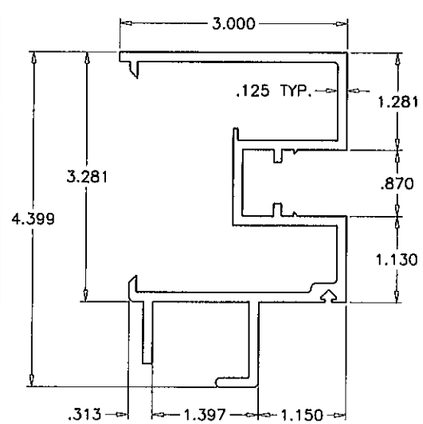

3A ALT. FRAME JAMB 1

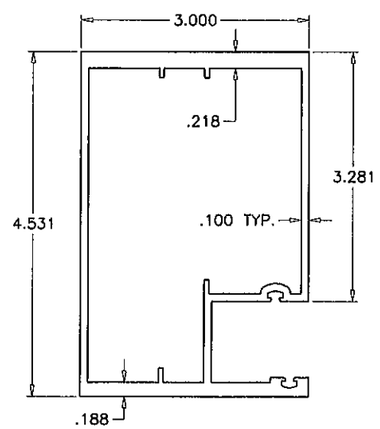

3B ALT. FRAME JAMB 2

MATERIALS LIST

ITEM NO.	PART NO.	QUANTITY	DESCRIPTION	MATERIAL	MANF./SUPPLIER/REMARKS
1	FX345-04	AS REQD.	FRAME HEAD/SILL	6063-T6	ALUMAX OR EQUIV.
2	FX345-06	AS REQD.	GLAZING RETAINER (HEAD/SILL)	6063-T5	ALUMAX OR EQUIV.
2A	FX345-013	AS REQD.	GLAZING RETAINER (JAMB)	6063-T6	ALUMAX OR EQUIV.
2B	FX345-05	AS REQD.	GLAZING RETAINER (HORIZONTAL)	6063-T6	ALUMAX OR EQUIV.
3	FX345-09	AS REQD.	FRAME JAMB	6063-T5	ALUMAX OR EQUIV.
3A	FX345-012	AS REQD.	ALT. FRAME JAMB 1	6063-T6	ALUMAX OR EQUIV.
3B	FX345-049	AS REQD.	ALT. FRAME JAMB 2	6063-T6	ALUMAX OR EQUIV.
4	FX345-01	AS REQD.	FEMALE MULLION	6063-T6	ALUMAX OR EQUIV.
5	FX345-02	AS REQD.	MALE MULLION	6063-T6	ALUMAX OR EQUIV.
6	FX345-07	AS REQD.	SNAP-IN COVER HEAD/SILL	6063-T5	ALUMAX OR EQUIV.
7	245FX011	AS REQD.	SNAP-IN COVER JAMB	6063-T5	ALUMAX OR EQUIV.
8	V-003	AS REQD.	GLAZING GASKET	VINYL	WIBORG, DUROMETER 60 SHORE A
8A	V-038	AS REQD.	GLAZING GASKET	VINYL	WIBORG, DUROMETER 70±5 SHORE A
8B	V-042	AS REQD.	GLAZING GASKET (AT ALT. JAMB 2)	VINYL	WIBORG, DUROMETER 70±5 SHORE A
9	WV-3289	AS REQD.	BULB WEATHERSTRIPPING	VINYL	WIBORG
10	–	2/ LITE	SETTING BLOCKS (3/4" X 5/8" X 3-1/4")	TPE	MELTPOINT PLASTICS, DUROMETER 70 SHORE A
11	–	–	SEALANT DOW CORNING 795 OR EQUAV.	SILICONE	AT EXT. GLASS PERIMETER
12	–	AS REQD.	REINFORCING BAR (1/2" X 3" X 90")	STEEL, A36	MIN. Fy=36 KSI, SILICONED IN PLACE
13	–	4/ CORNER	FRAME ASSEMBLY SCREWS	–	#12 X 1-1/4" PH SMS

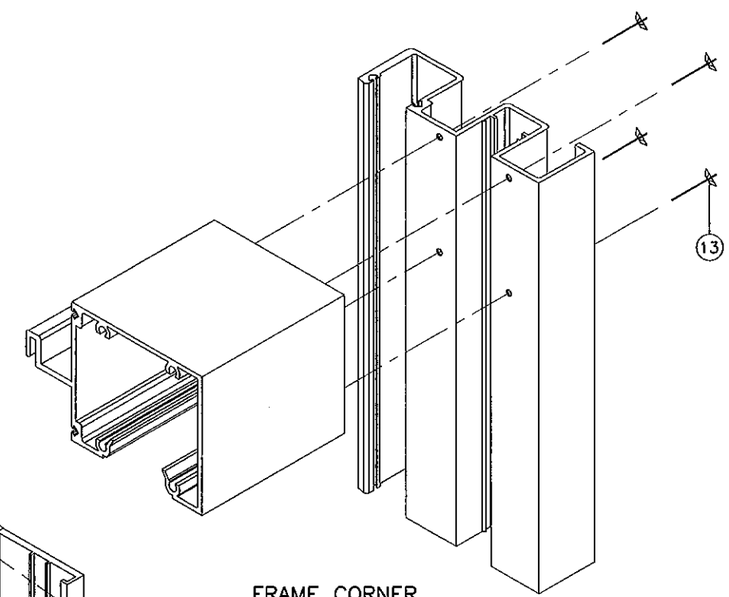

FRAME CORNER

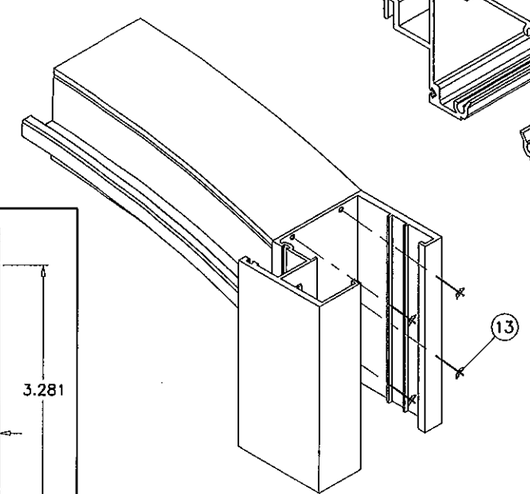

RADIUS CORNER

PRODUCT REVISED
as complying with the Florida
Building Code
Acceptance No 12-0410.24
Expiration Date 06/10/2014
By
Miami Dade Product Control

Engr: JAVAD AHMAD
CIVIL
FLA. PE # 70592
C.A.N. 3538

MAR 2 2 2012

AL-FAROOQ CORPORATION
ENGINEERS & PRODUCT DEVELOPMENT
1235 S.W. 87 AVE
MIAMI, FLORIDA 33174
TEL. (305) 264-8100 FAX. (305) 262-6978
STORE\W03-46RC

FX-345 ALUM. WINDOW WALL SYSTEM (S.M.I.)

R.C. ALUMINUM INDUSTRIES INC.
2805 N.W. 75 TH AVE.
MIAMI, FL. 33122
TEL. (305) 592-1515 FAX. (305) 592-2184

revisions:

no	date	by	description
G	07.09.09		DIMS. ADDED
H	09.07.10		GLAZING GASKET REV.
I	12.21.10		REV. PER BCCO COMMENTS
J	03.20.12		NO CHANGE THIS SHEET

date: 06-21-03
scale: 1/2" = 1"
dr. by: HAMID
chk. by:

drawing no.
W03-46

sheet 9 of 9