MIAMI-DADE COUNTY
DEPARTMENT OF PERMITTING, ENVIRONMENT, AND REGULATORY AFFAIRS (PERA)
BOARD AND CODE ADMINISTRATION DIVISION

MIAMI-DADE COUNTY
PRODUCT CONTROL SECTION
11805 SW 26 Street, Room 208
Miami, Florida 33175-2474
T (786) 315-2590 F (786) 315-2599
www.miamidade.gov/pera

NOTICE OF ACCEPTANCE (NOA)

R.C. Aluminum Industries Inc.
2805 N.W. 75th Avenue
Miami, FL 33122

SCOPE:

This NOA is being issued under the applicable rules and regulations governing the use of construction materials. The documentation submitted has been reviewed and accepted by Miami-Dade County PERA - Product Control Section to be used in Miami Dade County and other areas where allowed by the Authority Having Jurisdiction (AHJ).

This NOA shall not be valid after the expiration date stated below. The Miami-Dade County Product Control Section (In Miami Dade County) and/or the AHJ (in areas other than Miami Dade County) reserve the right to have this product or material tested for quality assurance purposes. If this product or material fails to perform in the accepted manner, the manufacturer will incur the expense of such testing and the AHJ may immediately revoke, modify, or suspend the use of such product or material within their jurisdiction. PERA reserves the right to revoke this acceptance, if it is determined by Miami-Dade County Product Control Section that this product or material fails to meet the requirements of the applicable building code.

This product is approved as described herein, and has been designed to comply with the Florida Building Code, including the High Velocity Hurricane Zone.

DESCRIPTION: Series "FX 345" Aluminum Window Wall System - L.M.I.

APPROVAL DOCUMENT: Drawing No. **W03-103**, titled "Series "FX-345" Aluminum Window Wall System (L.M.I.)", sheets 1 through 9 of 9, dated 11/14/2003, with revision I dated 03/20/2012, prepared by Al-Farooq Corporation, signed and sealed by Javad Ahmad, P.E., bearing the Miami-Dade County Product Control Revision stamp with the Notice of Acceptance number and expiration date by the Miami-Dade County Product Control Section.

MISSILE IMPACT RATING: Large and Small Missile Impact Resistant

LABELING: Each unit shall bear a permanent label with the manufacturer's name or logo, city, state, model/series, and following statement: "Miami-Dade County Product Control Approved", unless otherwise noted herein.

RENEWAL of this NOA shall be considered after a renewal application has been filed and there has been no change in the applicable building code negatively affecting the performance of this product.

TERMINATION of this NOA will occur after the expiration date or if there has been a revision or change in the materials, use, and/or manufacture of the product or process. Misuse of this NOA as an endorsement of any product, for sales, advertising or any other purposes shall automatically terminate this NOA. Failure to comply with any section of this NOA shall be cause for termination and removal of NOA.

ADVERTISEMENT: The NOA number preceded by the words Miami-Dade County, Florida, and followed by the expiration date may be displayed in advertising literature. If any portion of the NOA is displayed, then it shall be done in its entirety.

INSPECTION: A copy of this entire NOA shall be provided to the user by the manufacturer or its distributors and shall be available for inspection at the job site at the request of the Building Official.

This NOA **revises NOA # 10-0525.05** and consists of this page 1 and evidence pages E-1, E-2 and E-3, as well as approval document mentioned above.

The submitted documentation was reviewed by **Carlos M. Utrera, P.E.**

MIAMI-DADE COUNTY APPROVED

06/27/2012

NOTICE OF ACCEPTANCE: EVIDENCE SUBMITTED

A. DRAWINGS

1. Manufacturers die drawings and sections.
2. Drawing No. **W03-103,** titled "Series "FX-345" Alum Window Wall System (L.M.I.)", sheets 1 through 9 of 9, dated 11/14/2003, with revision I dated 03/20/2012, prepared by Al-Farooq Corporation, signed and sealed by Javad Ahmad, P.E.

B. TESTS *"Submitted under NOA # 10-0525.05"*

1. Test reports on 1) Air Infiltration Test, per FBC, TAS 202-94
   2) Uniform Static Air Pressure Test, Loading per FBC, TAS 202-94
   3) Water Resistance Test, per FBC, TAS 202-94
   4) Large Missile Impact Test per FBC, TAS 201-94
   5) Cyclic Wind Pressure Loading per FBC, TAS 203-94

   along with marked-up drawings and installation diagram of aluminum window wall systems, prepared by Fenestration Testing Laboratory, Inc., Test Reports No. **FTL-6098** and **FTL-6044**, dated 12/11/2009 and 12/30/2009 respectively, both signed and sealed by Michael R. Wenzel, P.E.
2. Test reports on 1) Air Infiltration Test, per FBC, TAS 202-94
   2) Uniform Static Air Pressure Test, Loading per FBC, TAS 202-94
   3) Water Resistance Test, per FBC, TAS 202-94
   4) Small Missile Impact Test per FBC, TAS 201-94
   5) Cyclic Wind Pressure Loading per FBC, TAS 203-94

   along with marked-up drawings and installation diagram of aluminum window wall system, prepared by Fenestration Testing Laboratory, Inc., Test Report No. **FTL-4612**, dated 05/17/2005, signed and sealed by Edmundo J. Largaespada, P.E.
   "Submitted under NOA # 07-0831.05"
3. Test reports on 1) Air Infiltration Test, per FBC, TAS 202-94
   2) Uniform Static Air Pressure Test, Loading per FBC, TAS 202-94
   3) Water Resistance Test, per FBC, TAS 202-94
   4) Small Missile Impact Test per FBC, TAS 201-94
   5) Cyclic Wind Pressure Loading per FBC, TAS 203-94

   along with marked-up drawings and installation diagram of aluminum window wall system, prepared by Fenestration Testing Laboratory, Inc., Test Report No. **FTL-3719**, dated 02/26/2003, signed and sealed by Joseph C. Chan, P.E.
   "Submitted under NOA # 03-1023.02"

06/27/2012

Carlos M. Utrera, P.E.
Product Control Examiner
NOA No 12-0410.25
Expiration Date: March 25, 2014
Approval Date: July 5, 2012

NOTICE OF ACCEPTANCE: EVIDENCE SUBMITTED

B. TESTS (Cont.)

4. Test reports on 1) Air Infiltration Test, per FBC, TAS 202-94
2) Uniform Static Air Pressure Test, Loading per FBC, TAS 202-94
3) Water Resistance Test, per FBC, TAS 202-94
4) Small Missile Impact Test per FBC, TAS 201-94
5) Cyclic Wind Pressure Loading per FBC, TAS 203-94
along with marked-up drawings and installation diagram of aluminum window wall system, prepared by Fenestration Testing Laboratory, Inc., Test Report No. **FTL-3713**, dated 02/14/2003, signed and sealed by Edmundo J. Largaespada, P.E. ***"Submitted under NOA # 03-1023.02"***

5. Test reports on 1) Small Missile Impact Test per FBC, TAS 201-94
2) Cyclic Wind Pressure Loading per FBC, TAS 203-94
along with marked-up drawings and installation diagram of aluminum window wall system, prepared by Fenestration Testing Laboratory, Inc., Test Report No. **FTL-3478**, dated 07/03/2002, signed and sealed by Edmundo J. Largaespada, P.E. ***"Submitted under NOA # 03-1023.02"***

6. Test reports on 1) Uniform Static Air Pressure Test, Loading per FBC, TAS 202-94 along with marked-up drawings and installation diagram of a steel reinforced aluminum window wall system, prepared by Hurricane Engineering & Testing, Inc., Test Report No. **HETI-01-1188**, dated 05/22/2001, revised on 06/23/2003, signed and sealed by Rafael E. Droz-Seda, P.E. ***"Submitted under NOA # 03-1023.02"***

7. Test reports on 1) Large Missile Impact Test per FBC, TAS 201-94
2) Cyclic Wind Pressure Loading per FBC, TAS 203-94
along with marked-up drawings and installation diagram of steel reinforced aluminum window wall systems, prepared by Hurricane Engineering & Testing, Inc., Test Reports No. **HETI-01-1018** and **HETI-01-1038**, dated 05/18/2001 and 06/20/2001 respectively, both signed and sealed by Rafael E. Droz-Seda, P.E. ***"Submitted under NOA # 03-1023.02"***

8. Test reports on 1) Air Infiltration Test, per FBC, TAS 202-94
2) Uniform Static Air Pressure Test, Loading per FBC, TAS 202-94
3) Water Resistance Test, per FBC, TAS 202-94
along with marked-up drawings and installation diagram of a steel reinforced aluminum window wall system, prepared by Hurricane Engineering & Testing, Inc., Test Report No. **HETI-01-1037**, dated 06/20/2001, signed and sealed by Rafael E. Droz-Seda, P.E. ***"Submitted under NOA # 03-1023.02"***

06/27/2012

Carlos M. Utrera, P.E.
Product Control Examiner
NOA No 12-0410.25
Expiration Date: March 25, 2014
Approval Date: July 5, 2012

NOTICE OF ACCEPTANCE: EVIDENCE SUBMITTED

B. TESTS (Cont.)

9. Test report on Safety Performance (Impact) per American National Standard for Safety Glazing Materials Used in Buildings, ANSI Z-97.1 (CPSC 16 CFR 1201), along with marked-up and die drawings of aluminum window wall system, prepared by Fenestration Testing Laboratory, Inc., Test Report No. **FTL-5318,** dated 07/05/2007, signed and sealed by Carlos S. Rionda, P.E.

C. CALCULATIONS

1. Anchor verification calculations and structural analysis, complying with FBC 2007, dated 03/16/10, prepared by Al-Farooq Corporation, signed and sealed by Javad Ahmad, P.E. ***"Submitted under NOA # 10-0525.05"***
   Complies with ASTM E1300-04

D. QUALITY ASSURANCE

1. Miami-Dade Department of Permitting, Environment, and Regulatory Affairs (PERA)

E. MATERIAL CERTIFICATIONS

1. Notice of Acceptance No. **11–0624.02** issued to **E.I. DuPont DeNemours & Co.**, Inc. for their "**DuPont SentryGlas® Interlayer**" dated 08/25/2011, expiring on 01/14/2017.
2. Notice of Acceptance No. **11-0624.01** issued to E.I. DuPont DeNemours & Co., Inc. for their "**DuPont Butacite PVB Interlayer**" dated 09/8/2011, expiring on 12/11/2016.
3. Notice of Acceptance No. **11-1102.09** issued to Solutia Inc. for their "**Saflex and Saflex HP Composite Glass Interlayers with PET Core**" dated 06/14/2012, expiring on 12/11/2013.
4. Notice of Acceptance No. **11-1102.11** issued to Solutia Inc. for their "**Saflex Clear and Color Glass Interlayers**" dated 06/14/2012, expiring on 05/21/2016.
5. Notice of Acceptance No. **10-0201.01** issued to Viracon, Inc. for their "**Viracon HRG-2 Glass Interlayer**", dated 03/24/2010, expiring on 02/12/2014.

F. STATEMENTS

1. Statement letter of code conformance with 2010 FBC and no financial interest issued by Al-Farooq Corporation, dated 03/20/2012, signed and sealed by Javad Ahmad, P.E.

2. Statement letter of code compliance with 2007 FBC and no financial interest issued by Al-Farooq Corporation, dated 03/16/2010, signed and sealed by Javad Ahmad, P.E. ***"Submitted under NOA # 10-0525.05"***

06/27/2012

Carlos M. Utrera, P.E.
Product Control Examiner
NOA No 12-0410.25
Expiration Date: March 25, 2014
Approval Date: July 5, 2012

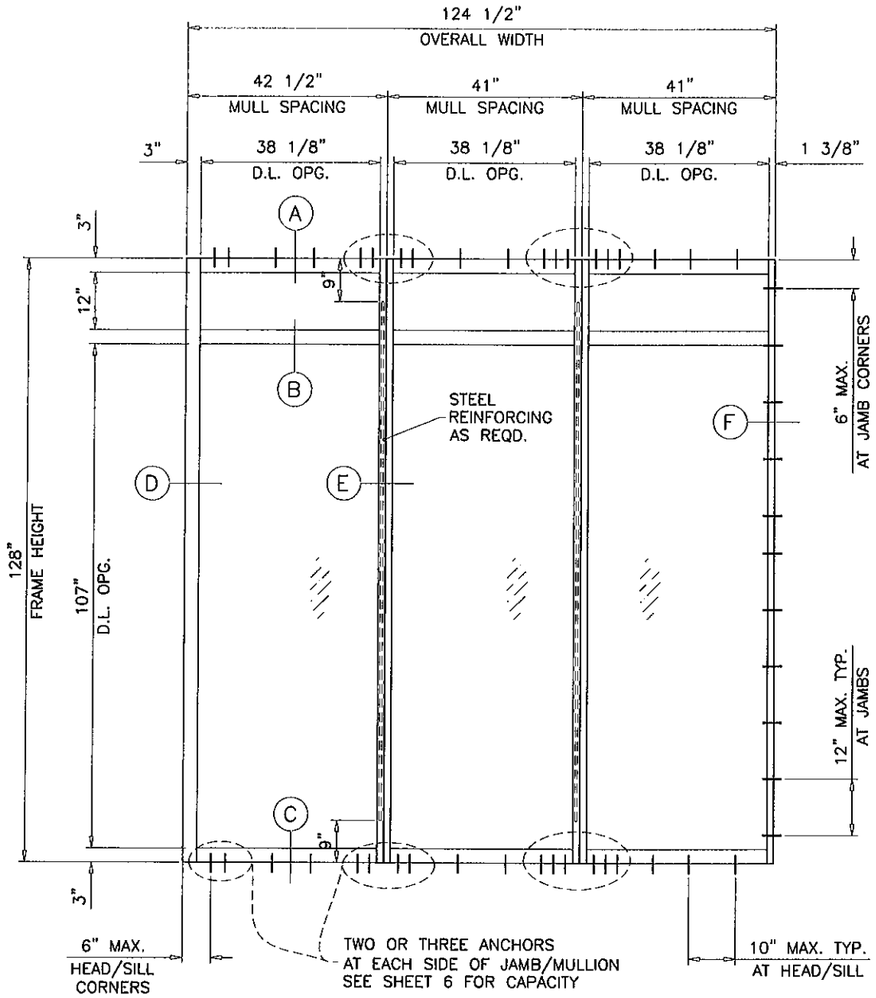

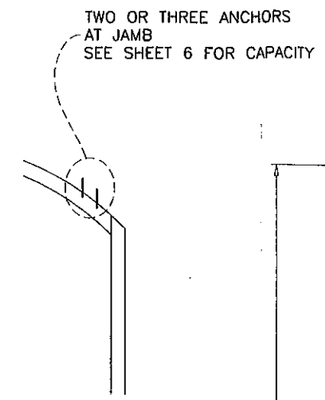

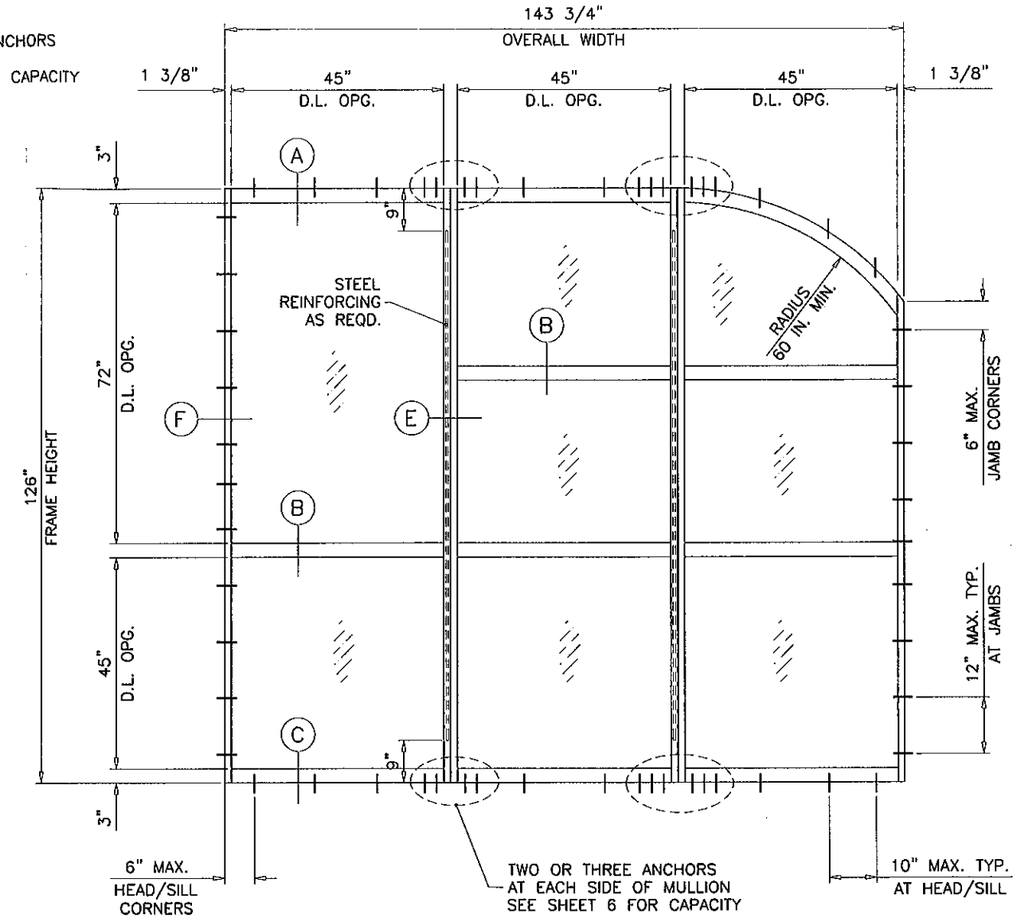

TYPICAL ELEVATIONS
TESTED UNITS

FX-345 ALUM. WINDOW WALL SYSTEM (L.M.I.)

THIS SYSTEM IS RATED FOR LARGE & SMALL MISSILE IMPACT.
SHUTTERS ARE NOT REQUIRED.

CODE REQUIREMENTS FOR SAFEGUARDS MUST BE OBSERVED.

THIS PRODUCT HAS BEEN DESIGNED AND TESTED TO COMPLY WITH THE REQUIREMENTS OF THE FLORIDA BUILDING CODE INCLUDING HIGH VELOCITY HURRICANE ZONE (HVHZ).

ANCHORS SHALL BE AS LISTED, SPACED AS SHOWN ON DETAILS, ANCHORS EMBEDMENT TO BASE MATERIAL SHALL BE BEYOND WALL DRESSING OR STUCCO.

ANCHORING OR LOADING CONDITIONS NOT SHOWN IN THESE DETAILS ARE NOT PART OF THIS APPROVAL.

MATERIALS INCLUDING BUT NOT LIMITED TO STEEL/METAL SCREWS, THAT COME INTO CONTACT WITH OTHER DISSIMILAR MATERIALS SHALL MEET THE REQUIREMENTS OF THE FLORIDA BLDG. CODE SECTION 2003.8.4.

INSTRUCTIONS:

USE CHARTS AS FOLLOWS.

STEP 1 DETERMINE DESIGN WIND LOAD REQUIREMENT BASED ON WIND VELOCITY, BLDG. HEIGHT, WIND ZONE USING APPLICABLE ASCE 7 STANDARD.

STEP 2 SEE CHARTS ON SHEET 3 FOR DESIGN LOAD CAPACITY OF DESIRED GLASS.

STEP 3 CHECK MULLION CAPACITY FOR A GIVEN SPACING AND HEIGHT USING CHARTS ON SHEETS 4 & 5 THE CAPACITY SHOULD EXCEED THE DESIGN LOAD.

STEP 4 USING CHART ON SHEETS 6 SELECT ANCHOR OPTION WITH DESIGN RATING MORE THAN DESIGN LOAD SPECIFIED IN STEP 1 ABOVE.

STEP 5 FOR CAPACITY OF JAMBS WITH ANCHORS OPTION SEE CHART ON SHEET 8.

STEP 6 THE LOWEST VALUE RESULTING FROM STEPS 2, 3, 4 AND 5 SHALL APPLY TO ENTIRE SYSTEM.

WINDOW WALL SYSTEM WITH GLASS TYPES 'A' & 'B' ONLY COMPLIES WITH REQUIREMENTS OF ANSI Z97.1.

LAMINATED GLASS
LARGE MISSILE IMPACT

Engr: JAVAD AHMAD
CIVIL
FLA. PE # 70592
C.A.N. 3538

PRODUCT REVISED
as complying with the Florida Building Code
Acceptance No 12-0410.25
Expiration Date 03/25/2014
By
Miami Dade Product Control

MAR 2 2 2012

AL-FAROOQ CORPORATION
ENGINEERS & PRODUCT DEVELOPMENT
1235 S.W. 87 AVE
MIAMI, FLORIDA 33174
TEL. (305) 264-8100 FAX. (305) 262-6978

STORE\W03-103RC

FX-345 ALUM. WINDOW WALL SYSTEM (L.M.I.)

R.C. ALUMINUM INDUSTRIES INC.
2805 N.W. 75 TH AVE.
MIAMI, FL. 33122
TEL. (305) 592-1515 FAX. (305) 592-2184

revisions:

no	date	by	description
F	10.24.08		UPDATED FOR 2007 FBC
G	02.02.09		NO CHANGE THIS SHEET
H	03.17.10		GLASS OPTIONS E & F ADDED
I	03.20.12		UPDTED TO 2010 FBC

date: 11-14-03
scale: 3/8"=1'-0"
dr. by: HAMID
chk. by:

drawing no.
W03-103

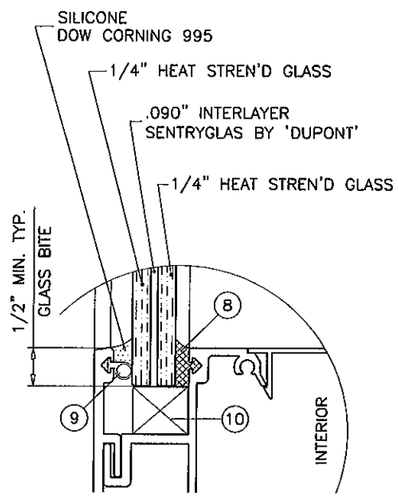

GLASS TYPE 'A'

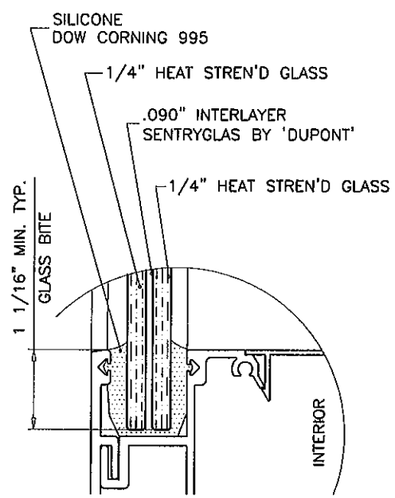

GLASS TYPE 'B'

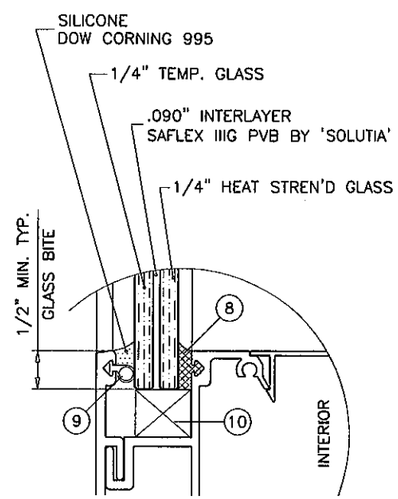

GLASS TYPE 'C'

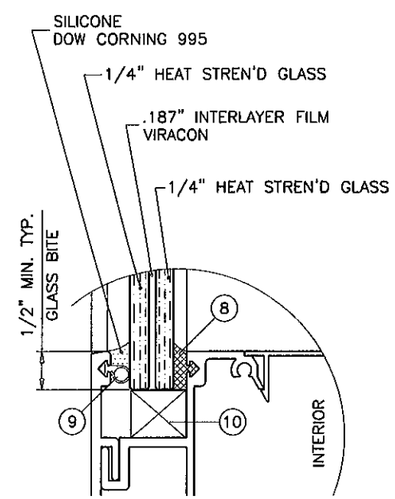

GLASS TYPE 'D'

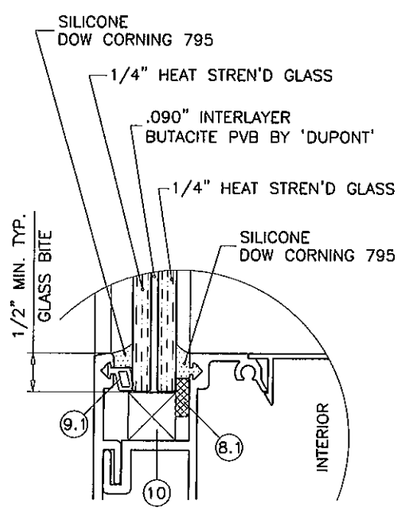

GLASS TYPE 'E'

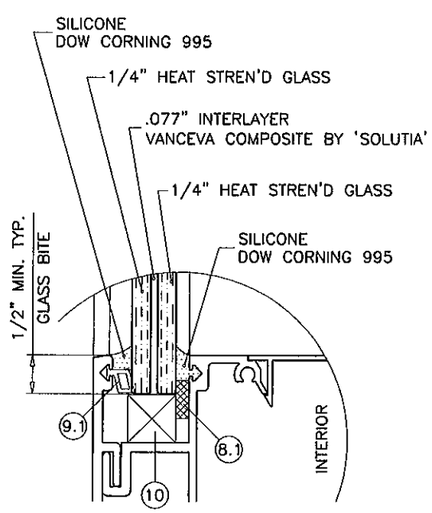

GLASS TYPE 'F'

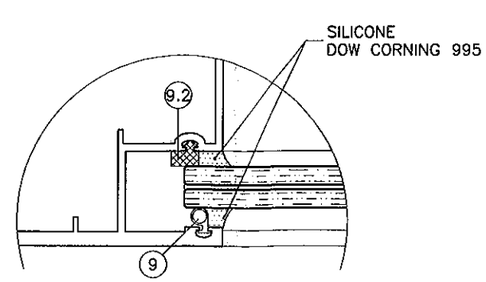

GLAZING DETAIL AT JAMB ONLY
GLASS TYPES 'E' & 'F'

GLAZING OPTIONS

Engr: JAVAD AHMAD
CIVIL
FLA. PE # 70592
C.A.N. 3538

MAR 2 2 2012

PRODUCT REVISED
as complying with the Florida Building Code
Acceptance No 12-0410.25
Expiration Date 03/25/2014
By
Miami Dade Product Control

AL-FAROOQ CORPORATION
ENGINEERS & PRODUCT DEVELOPMENT
1235 S.W. 87 AVE
MIAMI, FLORIDA 33174
TEL. (305) 264-8100 FAX. (305) 262-6978

STORE\W03-103RC

FX-345 ALUM. WINDOW WALL SYSTEM (L.M.I.)

R.C. ALUMINUM INDUSTRIES INC.
2805 N.W. 75 TH AVE.
MIAMI, FL. 33122
TEL. (305) 592-1515 FAX. (305) 592-2184

revisions:

no	date	by	description
F	10.24.08		UPDATED FOR 2007 FBC
G	02.02.09		NO CHANGE THIS SHEET
H	03.17.10		GLASS OPTIONS E & F ADDED
I	03.20.12		UPDTED TO 2010 FBC

date: 11-14-03
scale: 1/2" = 1"
dr. by: HAMID
chk. by:

drawing no.
W03-103

sheet 2 of 9

GLASS DESIGN LOAD CAPACITY - PSF

NOMINAL DIMS		GLASS TYPES						
		TYPE 'A'	TYPE 'B'	TYPE 'C'	TYPE 'D'	TYPE 'E'	TYPE 'F'	
D.L.O. WIDTH	D.L.O. HEIGHT	EXT. (+) INT. (-)	EXT. (+) INT. (-)	EXT. (+) INT. (-)	EXT. (+) INT. (-)	EXT. (+) INT. (-)	EXT. (+)	INT. (-)
24"	60"	95.0	115.0	81.0	120.0	80.0	74.0	117.0
27"		95.0	115.0	81.0	120.0	80.0	74.0	117.0
30"		95.0	115.0	81.0	120.0	80.0	74.0	117.0
33"		-	115.0	81.0	120.0	80.0	74.0	117.0
36"		-	115.0	81.0	120.0	80.0	74.0	117.0
39"		-	115.0	81.0	120.0	80.0	74.0	117.0
42"		-	115.0	81.0	120.0	80.0	74.0	117.0
45"		-	115.0	81.0	120.0	80.0	74.0	117.0
48"		-	115.0	81.0	120.0	80.0	74.0	117.0
51"		-	115.0	81.0	120.0	80.0	74.0	117.0
54"		-	115.0	81.0	120.0	80.0	-	-
57"		-	115.0	-	120.0	80.0	-	-
60"		-	115.0	-	120.0	80.0	-	-
63"		-	115.0	-	120.0	80.0	-	-
66"		-	115.0	-	120.0	80.0	-	-
69"		-	-	-	120.0	-	-	-
24"	66"	95.0	115.0	81.0	120.0	80.0	74.0	117.0
27"		95.0	115.0	81.0	120.0	80.0	74.0	117.0
30"		-	115.0	81.0	120.0	80.0	74.0	117.0
33"		-	115.0	81.0	120.0	80.0	74.0	117.0
36"		-	115.0	81.0	120.0	80.0	74.0	117.0
39"		-	115.0	81.0	120.0	80.0	74.0	117.0
42"		-	115.0	81.0	120.0	80.0	74.0	117.0
45"		-	115.0	81.0	120.0	80.0	74.0	117.0
48"		-	115.0	81.0	120.0	80.0	-	-
51"		-	115.0	-	120.0	80.0	-	-
54"		-	115.0	-	120.0	80.0	-	-
57"		-	115.0	-	120.0	80.0	-	-
60"		-	115.0	-	120.0	80.0	-	-
63"		-	-	-	120.0	-	-	-
24"	72"	95.0	115.0	81.0	120.0	80.0	74.0	117.0
27"		-	115.0	81.0	120.0	80.0	74.0	117.0
30"		-	115.0	81.0	120.0	80.0	74.0	117.0
33"		-	115.0	81.0	120.0	80.0	74.0	117.0
36"		-	115.0	81.0	120.0	80.0	74.0	117.0
39"		-	115.0	81.0	120.0	80.0	74.0	117.0
42"		-	115.0	81.0	120.0	80.0	74.0	117.0
45"		-	115.0	81.0	120.0	80.0	-	-
48"		-	115.0	-	120.0	80.0	-	-
51"		-	115.0	-	120.0	80.0	-	-
54"		-	115.0	-	120.0	80.0	-	-
57"		-	-	-	120.0	80.0	-	-
24"	78"	-	115.0	81.0	120.0	80.0	74.0	117.0
27"		-	115.0	81.0	120.0	80.0	74.0	117.0
30"		-	115.0	81.0	120.0	80.0	74.0	117.0
33"		-	115.0	81.0	120.0	80.0	74.0	117.0
36"		-	115.0	81.0	120.0	80.0	74.0	117.0
39"		-	115.0	81.0	120.0	80.0	74.0	117.0
42"		-	115.0	-	120.0	80.0	-	-
45"		-	115.0	-	120.0	80.0	-	-
48"		-	115.0	-	120.0	80.0	-	-
51"		-	115.0	-	120.0	80.0	-	-
54"		-	-	-	120.0	-	-	-

GLASS DESIGN LOAD CAPACITY - PSF

NOMINAL DIMS		GLASS TYPES						
		TYPE 'A'	TYPE 'B'	TYPE 'C'	TYPE 'D'	TYPE 'E'	TYPE 'F'	
D.L.O. WIDTH	D.L.O. HEIGHT	EXT. (+) INT. (-)	EXT. (+) INT. (-)	EXT. (+) INT. (-)	EXT. (+) INT. (-)	EXT. (+) INT. (-)	EXT. (+)	INT. (-)
24"	84"	-	115.0	81.0	120.0	80.0	74.0	117.0
27"		-	115.0	81.0	120.0	80.0	74.0	117.0
30"		-	115.0	81.0	120.0	80.0	74.0	117.0
33"		-	115.0	81.0	120.0	80.0	74.0	117.0
36"		-	115.0	81.0	120.0	80.0	74.0	117.0
39"		-	115.0	-	120.0	80.0	-	-
42"		-	115.0	-	120.0	80.0	-	-
45"		-	115.0	-	120.0	80.0	-	-
48"		-	115.0	-	120.0	80.0	-	-
24"	90"	-	115.0	81.0	120.0	80.0	74.0	117.0
27"		-	115.0	81.0	120.0	80.0	74.0	117.0
30"		-	115.0	81.0	120.0	80.0	74.0	117.0
33"		-	115.0	81.0	120.0	80.0	74.0	117.0
36"		-	115.0	81.0	120.0	80.0	-	-
39"		-	115.0	-	120.0	80.0	-	-
42"		-	115.0	-	120.0	80.0	-	-
45"		-	115.0	-	120.0	80.0	-	-
24"	96"	-	115.0	81.0	120.0	80.0	74.0	117.0
27"		-	115.0	81.0	120.0	80.0	74.0	117.0
30"		-	115.0	81.0	120.0	80.0	74.0	117.0
33"		-	115.0	81.0	120.0	80.0	-	-
36"		-	115.0	-	120.0	80.0	-	-
39"		-	115.0	-	120.0	80.0	-	-
42"		-	115.0	-	120.0	80.0	-	-
24"	102"	-	115.0	81.0	120.0	80.0	74.0	117.0
27"		-	115.0	81.0	120.0	80.0	74.0	117.0
30"		-	115.0	81.0	120.0	80.0	74.0	117.0
33"		-	115.0	-	120.0	80.0	-	-
36"		-	115.0	-	120.0	80.0	-	-
39"		-	115.0	-	120.0	80.0	-	-
24"	108"	-	115.0	81.0	120.0	80.0	74.0	117.0
27"		-	115.0	81.0	120.0	80.0	74.0	117.0
30"		-	115.0	81.0	120.0	80.0	-	-
33"		-	115.0	-	120.0	80.0	-	-
36"		-	115.0	-	120.0	80.0	-	-
39"		-	-	-	120.0	-	-	-
24"	114"	-	115.0	81.0	120.0	80.0	74.0	117.0
27"		-	115.0	81.0	120.0	80.0	74.0	117.0
30"		-	115.0	-	120.0	80.0	-	-
33"		-	115.0	-	120.0	80.0	-	-
36"		-	-	-	120.0	80.0	-	-
24"	120"	-	115.0	81.0	120.0	80.0	74.0	117.0
27"		-	115.0	81.0	120.0	80.0	-	-
30"		-	115.0	-	120.0	80.0	-	-
33"		-	115.0	-	120.0	80.0	-	-

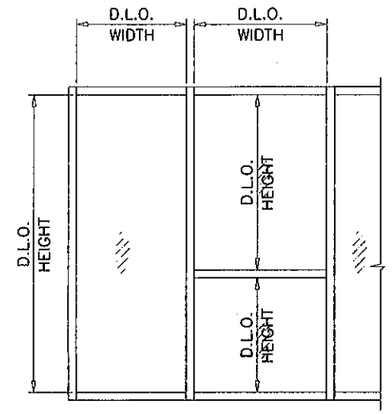

SEE SHEET 2 FOR GLAZING DETAILS.

NOTE:
GLASS CAPACITIES ON THIS SHEET ARE BASED ON ASTM E1300-04 (3 SEC. GUSTS).

Engr: JAVAD AHMAD
CIVIL
FLA. PE # 70592
C.A.N. 3538

PRODUCT REVISED
as complying with the Florida Building Code
Acceptance No 12-0410.25
Expiration Date 03/23/2014
By
Miami Dade Product Control

MAR 2 2 2012

AL-FAROOQ CORPORATION
ENGINEERS & PRODUCT DEVELOPMENT
1235 S.W. 87 AVE
MIAMI, FLORIDA 33174
TEL. (305) 264-8100 FAX. (305) 262-6978

STORE\W03-103RC

FX-345 ALUM. WINDOW WALL SYSTEM (L.M.I.)

R.C. ALUMINUM INDUSTRIES INC.
2805 N.W. 75 TH AVE.
MIAMI, FL. 33122
TEL. (305) 592-1515 FAX. (305) 592-2184

revisions:

no	date	by	description
F	10.24.08		UPDATED FOR 2007 FBC
G	02.02.09		NO CHANGE THIS SHEET
H	03.17.10		GLASS OPTIONS E & F ADDED
I	03.20.12		NO CHANGE THIS SHEET

date: 11-14-03
scale: -
dr. by: HAMID
chk. by:

drawing no.
W03-103

JAMB & MULLION DESIGN LOAD CAPACITY – PSF
WITHOUT INTERMEDIATE HORIZONTALS

NOMINAL DIMS.		JAMB TYPE 'J1'	JAMB TYPE 'J2'	MULL TYPE 'M1'	MULL TYPE 'M2'	MULL TYPE 'M3'	
WIDTH (W)	FRAME HEIGHT	EXT.(+) & INT.(–)	EXT.(+) & INT.(–)	EXT.(+) & INT.(–)	EXT.(+) & INT.(–)	EXT.(+)	INT.(–)
30"	60"	120.0	100.0	120.0	120.0	120.0	120.0
36"		120.0	100.0	120.0	120.0	120.0	120.0
42"		120.0	100.0	120.0	120.0	120.0	120.0
48"		120.0	100.0	120.0	120.0	120.0	120.0
54"		120.0	100.0	120.0	120.0	120.0	120.0
60"		120.0	100.0	120.0	120.0	120.0	120.0
66"		120.0	100.0	120.0	120.0	120.0	120.0
72"		120.0	100.0	120.0	120.0	120.0	120.0
30"	66"	120.0	100.0	120.0	120.0	120.0	120.0
36"		120.0	100.0	120.0	120.0	120.0	120.0
42"		120.0	100.0	120.0	120.0	120.0	120.0
48"		120.0	100.0	120.0	120.0	120.0	120.0
54"		120.0	100.0	120.0	120.0	120.0	120.0
60"		120.0	100.0	120.0	120.0	120.0	120.0
66"		120.0	100.0	120.0	120.0	120.0	120.0
72"		120.0	100.0	120.0	120.0	120.0	120.0
30"	72"	120.0	100.0	120.0	120.0	120.0	120.0
36"		120.0	100.0	120.0	120.0	120.0	120.0
42"		120.0	100.0	120.0	120.0	120.0	120.0
48"		120.0	100.0	120.0	120.0	120.0	120.0
54"		120.0	100.0	120.0	120.0	120.0	120.0
60"		120.0	100.0	120.0	120.0	120.0	120.0
66"		120.0	100.0	120.0	120.0	120.0	120.0
72"		120.0	100.0	120.0	120.0	120.0	120.0
30"	78"	120.0	100.0	120.0	120.0	120.0	120.0
36"		120.0	100.0	120.0	120.0	120.0	120.0
42"		120.0	100.0	120.0	120.0	120.0	120.0
48"		120.0	100.0	120.0	120.0	120.0	120.0
54"		120.0	100.0	120.0	120.0	120.0	120.0
60"		120.0	100.0	120.0	120.0	120.0	120.0
66"		120.0	100.0	120.0	120.0	120.0	120.0
72"		120.0	100.0	–	–	63.0	81.0
30"	84"	120.0	100.0	120.0	120.0	120.0	120.0
36"		120.0	100.0	120.0	120.0	120.0	120.0
42"		120.0	100.0	120.0	120.0	120.0	120.0
48"		120.0	100.0	120.0	120.0	120.0	120.0
54"		120.0	100.0	120.0	120.0	120.0	120.0
60"		120.0	100.0	116.2	116.2	116.2	116.2
66"		120.0	100.0	110.4	110.4	110.4	110.4
30"	90"	115.0	100.0	80.0	115.0	115.0	115.0
36"		115.0	100.0	80.0	115.0	115.0	115.0
42"		115.0	100.0	80.0	115.0	115.0	115.0
48"		115.0	100.0	80.0	115.0	115.0	115.0
54"		75.0	100.0	–	–	63.0	81.0
60"		–	100.0	–	–	63.0	81.0
66"		–	–	–	–	63.0	81.0
30"	96"	115.0	100.0	80.0	115.0	115.0	115.0
36"		115.0	100.0	80.0	115.0	115.0	115.0
42"		115.0	100.0	80.0	115.0	115.0	115.0
48"		75.0	100.0	80.0	–	63.0	81.0
54"		75.0	100.0	–	–	63.0	81.0
60"		–	100.0	–	–	63.0	81.0

JAMB & MULLION DESIGN LOAD CAPACITY – PSF
WITHOUT INTERMEDIATE HORIZONTALS

NOMINAL DIMS.		JAMB TYPE 'J1'	JAMB TYPE 'J2'	MULL TYPE 'M1'	MULL TYPE 'M2'	MULL TYPE 'M3'	
WIDTH (W)	FRAME HEIGHT	EXT.(+) & INT.(–)	EXT.(+) & INT.(–)	EXT.(+) & INT.(–)	EXT.(+) & INT.(–)	EXT.(+)	INT.(–)
30"	102"	115.0	100.0	–	75.0	63.0	81.0
36"		115.0	100.0	–	75.0	63.0	81.0
42"		115.0	100.0	–	75.0	63.0	81.0
48"		75.0	100.0	–	75.0	63.0	81.0
54"		–	100.0	–	–	63.0	81.0
30"	108"	115.0	100.0	–	75.0	63.0	81.0
36"		115.0	100.0	–	75.0	63.0	81.0
42"		115.0	100.0	–	75.0	63.0	81.0
48"		75.0	100.0	–	75.0	63.0	81.0
54"		–	–	–	–	63.0	81.0
30"	114"	115.0	100.0	–	75.0	63.0	81.0
36"		115.0	100.0	–	75.0	63.0	81.0
42"		75.0	100.0	–	75.0	63.0	81.0
48"		–	100.0	–	–	63.0	81.0
30"	120"	115.0	100.0	–	75.0	63.0	81.0
36"		115.0	100.0	–	75.0	63.0	81.0
42"		75.0	100.0	–	75.0	63.0	81.0
48"		–	100.0	–	–	63.0	81.0
30"	126"	115.0	–	–	75.0	63.0	81.0
36"		100.4	–	–	75.0	63.0	81.0
42"		–	–	–	–	63.0	81.0
48"		–	–	–	–	63.0	81.0

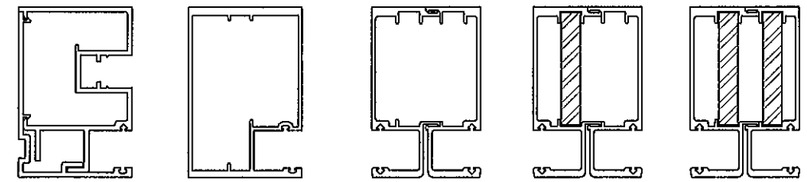

JAMB TYPE 'J1' JAMB TYPE 'J2' MULL TYPE 'M1' MULL TYPE 'M2' MULL TYPE 'M3'

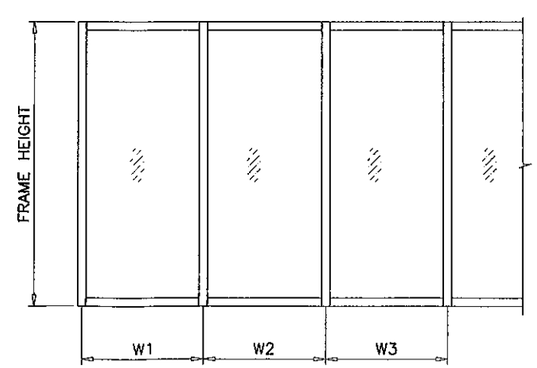

WIDTH (W) = W1
AT FRAME JAMB

WIDTH (W) = $\frac{W2 + W3}{2}$
AT FRAME MULLION

Engr: JAVAD AHMAD
CIVIL
FLA. PE # 70592
C.A.N. 3538

MAR 2 2 2012

PRODUCT REVISED
as complying with the Florida Building Code
Acceptance No 12-0410.25
Expiration Date 03/23/2014
By
Miami Dade Product Control

AL-FAROOQ CORPORATION
ENGINEERS & PROJECT DEVELOPMENT
1235 S.W. 87 AVE
MIAMI, FLORIDA 33174
TEL. (305) 264-8100 FAX. (305) 262-6978

STORE\W03-103RC

FX-345 ALUM. WINDOW WALL SYSTEM (L.M.I.)

R.C. ALUMINUM INDUSTRIES INC.
2805 N.W. 75 TH AVE.
MIAMI, FL. 33122
TEL. (305) 592-1515 FAX. (305) 592-2184

revisions:

no	date	by	description
F	10.24.08		UPDATED FOR 2007 FBC
G	02.02.09		MULLION M3 CHART REV.
H	03.17.10		SIZES ADDED
I	03.20.12		NO CHANGE THIS SHEET

date: 11-14-03
scale: –
dr. by: HAMID
chk. by:

drawing no.
W03-103

JAMB & MULLION DESIGN LOAD CAPACITY – PSF
WITH INTERMEDIATE HORIZONTALS

NOMINAL DIMS.		JAMB TYPE 'J1'	JAMB TYPE 'J2'	MULL TYPE 'M1'	MULL TYPE 'M2'	MULL TYPE 'M3'	
WIDTH (W)	FRAME HEIGHT	EXT.(+) & INT.(–)	EXT.(+) & INT.(–)	EXT.(+) & INT.(–)	EXT.(+) & INT.(–)	EXT.(+)	INT.(–)
30"	60"	120.0	100.0	120.0	120.0	120.0	120.0
36"		120.0	100.0	120.0	120.0	120.0	120.0
42"		120.0	100.0	120.0	120.0	120.0	120.0
48"		120.0	100.0	120.0	120.0	120.0	120.0
54"		120.0	100.0	120.0	120.0	120.0	120.0
60"		120.0	100.0	120.0	120.0	120.0	120.0
66"		120.0	100.0	120.0	120.0	120.0	120.0
72"		120.0	100.0	120.0	120.0	120.0	120.0
30"	66"	120.0	100.0	120.0	120.0	120.0	120.0
36"		120.0	100.0	120.0	120.0	120.0	120.0
42"		120.0	100.0	120.0	120.0	120.0	120.0
48"		120.0	100.0	120.0	120.0	120.0	120.0
54"		120.0	100.0	120.0	120.0	120.0	120.0
60"		120.0	100.0	120.0	120.0	120.0	120.0
66"		120.0	100.0	120.0	120.0	120.0	120.0
72"		120.0	100.0	120.0	120.0	120.0	120.0
30"	72"	120.0	100.0	120.0	120.0	120.0	120.0
36"		120.0	100.0	120.0	120.0	120.0	120.0
42"		120.0	100.0	120.0	120.0	120.0	120.0
48"		120.0	100.0	120.0	120.0	120.0	120.0
54"		120.0	100.0	120.0	120.0	120.0	120.0
60"		120.0	100.0	120.0	120.0	120.0	120.0
66"		120.0	100.0	120.0	120.0	120.0	120.0
72"		120.0	100.0	112.0	112.0	112.0	112.0
30"	78"	120.0	100.0	120.0	120.0	120.0	120.0
36"		120.0	100.0	120.0	120.0	120.0	120.0
42"		120.0	100.0	120.0	120.0	120.0	120.0
48"		120.0	100.0	120.0	120.0	120.0	120.0
54"		120.0	100.0	120.0	120.0	120.0	120.0
60"		120.0	100.0	113.8	120.0	120.0	120.0
66"		120.0	100.0	103.5	110.2	110.2	110.2
72"		120.0	100.0	–	–	63.0	81.0
30"	84"	120.0	100.0	120.0	120.0	120.0	120.0
36"		120.0	100.0	120.0	120.0	120.0	120.0
42"		120.0	100.0	120.0	120.0	120.0	120.0
48"		120.0	100.0	120.0	120.0	120.0	120.0
54"		120.0	100.0	109.1	115.0	115.0	115.0
60"		120.0	100.0	98.2	98.2	98.2	98.2
66"		120.0	100.0	89.2	89.2	89.2	89.2
30"	90"	115.0	100.0	80.0	115.0	115.0	115.0
36"		115.0	100.0	80.0	115.0	115.0	115.0
42"		115.0	100.0	80.0	115.0	115.0	115.0
48"		115.0	100.0	80.0	115.0	115.0	115.0
54"		75.0	100.0	–	–	63.0	81.0
60"		–	100.0	–	–	63.0	81.0
66"		–	–	–	–	63.0	81.0
30"	96"	115.0	100.0	80.0	115.0	115.0	115.0
36"		115.0	100.0	80.0	115.0	115.0	115.0
42"		115.0	100.0	80.0	115.0	115.0	115.0
48"		75.0	100.0	80.0	–	63.0	81.0
54"		75.0	100.0	–	–	63.0	81.0
60"		–	100.0	–	–	63.0	81.0

JAMB & MULLION DESIGN LOAD CAPACITY – PSF
WITH INTERMEDIATE HORIZONTALS

NOMINAL DIMS.		JAMB TYPE 'J1'	JAMB TYPE 'J2'	MULL TYPE 'M1'	MULL TYPE 'M2'	MULL TYPE 'M3'	
WIDTH (W)	FRAME HEIGHT	EXT.(+) & INT.(–)	EXT.(+) & INT.(–)	EXT.(+) & INT.(–)	EXT.(+) & INT.(–)	EXT.(+)	INT.(–)
30"	102"	115.0	100.0	–	75.0	63.0	81.0
36"		115.0	100.0	–	75.0	63.0	81.0
42"		115.0	100.0	–	75.0	63.0	81.0
48"		75.0	100.0	–	75.0	63.0	81.0
54"		–	100.0	–	–	63.0	81.0
30"	108"	115.0	100.0	–	75.0	63.0	81.0
36"		115.0	100.0	–	75.0	63.0	81.0
42"		115.0	100.0	–	75.0	63.0	81.0
48"		75.0	100.0	–	75.0	63.0	81.0
54"		–	–	–	–	63.0	81.0
30"	114"	115.0	100.0	–	75.0	63.0	81.0
36"		115.0	100.0	–	75.0	63.0	81.0
42"		75.0	100.0	–	75.0	63.0	81.0
48"		–	100.0	–	–	63.0	81.0
30"	120"	115.0	100.0	–	75.0	63.0	81.0
36"		112.8	100.0	–	75.0	63.0	81.0
42"		75.0	100.0	–	75.0	63.0	81.0
48"		–	98.2	–	–	63.0	81.0
30"	126"	115.0	–	–	75.0	63.0	81.0
36"		97.4	–	–	75.0	63.0	81.0
42"		–	–	–	–	63.0	81.0
48"		–	–	–	–	63.0	81.0

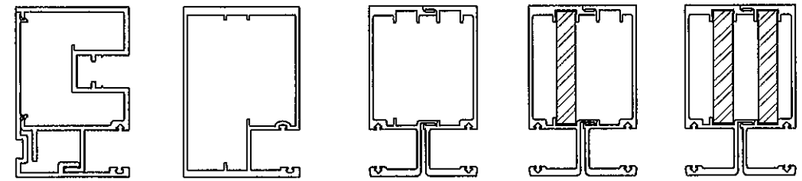

JAMB TYPE 'J1' JAMB TYPE 'J2' MULL TYPE 'M1' MULL TYPE 'M2' MULL TYPE 'M3'

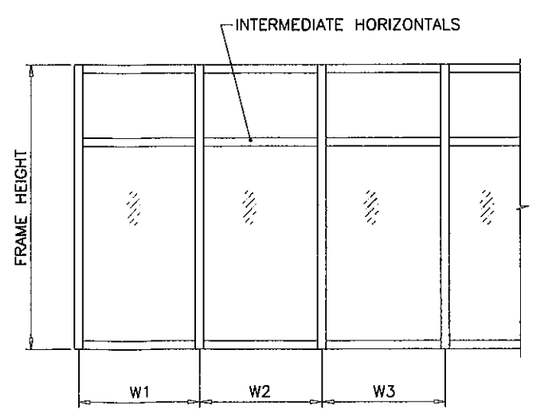

WIDTH (W) = W1
AT FRAME JAMB

WIDTH (W) = $\frac{W2 + W3}{2}$
AT FRAME MULLION

Engr: JAVAD AHMAD
CIVIL
FLA. PE # 70592
C.A.N. 3538

PRODUCT REVISED
as complying with the Florida Building Code
Acceptance No 12-0419.25
Expiration Date 03/23/2014
By
Miami Dade Product Control

MAR 2 2 2012

AL-FAROOQ CORPORATION
ENGINEERS & PRODUCT DEVELOPMENT
1235 S.W. 87 AVE
MIAMI, FLORIDA 33174
TEL. (305) 264-8100 FAX. (305) 262-6978
STORE\W03-103RC

FX-345 ALUM. WINDOW WALL SYSTEM (L.M.I.)

R.C. ALUMINUM INDUSTRIES INC.
2805 N.W. 75 TH AVE.
MIAMI, FL. 33122
TEL. (305) 592-1515 FAX. (305) 592-2184

revisions:

no	date	by	description
F	10.24.08		UPDATED FOR 2007 FBC
G	02.02.09		MULLION M3 CHART REV.
H	03.17.10		SIZES ADDED
I	03.20.12		NO CHANGE THIS SHEET

date: 11-14-03
scale: –
dr. by: HAMID
chk. by:

drawing no.
W03-103

ANCHOR DESIGN LOAD CAPACITY - PSF

NOMINAL DIMS.		2 ANCHORS @ EACH SIDE OF JAMB OR MULL				3 ANCHORS @ EACH SIDE OF JAMB OR MULL			
		3/8" MAX. SHIM SPACE		5/8" MAX. SHIM SPACE		3/8" MAX. SHIM SPACE		5/8" MAX. SHIM SPACE	
		TYPE 'A'	TYPE 'B'	TYPE 'A'	TYPE 'B'	TYPE 'A'	TYPE 'B'	TYPE 'A'	TYPE 'B'
WIDTH (W)	FRAME HEIGHT	EXT. (+) INT. (-)	EXT. (+) INT. (-)	EXT. (+) INT. (-)	EXT. (+) INT. (-)	EXT. (+) INT. (-)	EXT. (+) INT. (-)	EXT. (+) INT. (-)	EXT. (+) INT. (-)
30"	60"	120.0	120.0	120.0	112.8	120.0	120.0	120.0	120.0
36"		120.0	120.0	120.0	94.0	120.0	120.0	120.0	120.0
42"		120.0	116.5	120.0	80.6	120.0	120.0	120.0	120.0
48"		120.0	101.9	120.0	70.5	120.0	120.0	120.0	105.7
54"		120.0	90.6	114.0	62.7	120.0	120.0	120.0	94.0
60"		120.0	81.5	102.6	56.4	120.0	120.0	120.0	84.6
66"		120.0	74.1	93.3	51.3	120.0	111.2	120.0	76.9
72"		120.0	67.9	85.5	47.0	120.0	101.9	120.0	70.5
30"	66"	120.0	120.0	120.0	102.5	120.0	120.0	120.0	120.0
36"		120.0	120.0	120.0	85.5	120.0	120.0	120.0	120.0
42"		120.0	105.9	120.0	73.2	120.0	120.0	120.0	109.8
48"		120.0	92.6	116.6	64.1	120.0	120.0	120.0	96.1
54"		120.0	82.3	103.7	57.0	120.0	120.0	120.0	85.4
60"		120.0	74.1	93.3	51.3	120.0	111.2	120.0	76.9
66"		120.0	67.4	84.8	46.6	120.0	101.1	120.0	69.9
72"		112.5	61.8	77.8	42.7	120.0	92.7	116.6	64.1
30"	72"	120.0	120.0	120.0	94.0	120.0	120.0	120.0	120.0
36"		120.0	113.2	120.0	78.3	120.0	120.0	120.0	117.4
42"		120.0	97.0	120.0	67.1	120.0	120.0	120.0	100.7
48"		120.0	84.9	106.9	58.8	120.0	120.0	120.0	88.1
54"		120.0	75.5	95.0	52.2	120.0	113.3	120.0	78.3
60"		120.0	67.9	85.5	47.0	120.0	101.9	120.0	70.5
66"		112.5	61.8	77.8	42.7	120.0	92.7	116.6	64.1
72"		103.2	56.6	71.3	39.2	120.0	84.9	106.9	58.7
30"	78"	120.0	120.0	120.0	86.8	120.0	120.0	120.0	120.0
36"		120.0	104.5	120.0	72.3	120.0	120.0	120.0	108.4
42"		120.0	89.6	112.8	62.0	120.0	120.0	120.0	92.9
48"		120.0	78.4	98.7	54.2	120.0	117.6	120.0	81.3
54"		120.0	69.7	87.7	48.2	120.0	104.5	120.0	72.3
60"		114.3	62.7	79.0	43.4	120.0	94.1	118.4	65.0
66"		103.9	57.0	71.8	39.4	120.0	85.5	107.6	59.1
72"		95.2	52.3	65.8	36.2	120.0	78.4	98.7	54.2
30"	84"	120.0	116.5	120.0	80.6	120.0	120.0	120.0	120.0
36"		120.0	97.0	120.0	67.1	120.0	120.0	120.0	100.7
42"		120.0	83.2	104.7	57.6	120.0	120.0	120.0	86.3
48"		120.0	72.8	91.6	50.4	120.0	109.2	120.0	75.5
54"		117.9	64.7	81.5	44.8	120.0	97.1	120.0	67.1
60"		106.1	58.2	73.3	40.3	120.0	87.4	109.9	60.4
66"		96.5	52.9	66.6	36.6	120.0	79.4	99.9	54.9
30"	90"	120.0	108.7	120.0	75.2	120.0	120.0	120.0	112.7
36"		120.0	90.6	114.0	62.7	120.0	120.0	120.0	94.0
42"		120.0	77.6	97.8	53.7	120.0	116.5	120.0	80.5
48"		120.0	67.9	85.5	47.0	120.0	101.9	120.0	70.5
54"		110.0	60.4	76.0	41.8	120.0	90.6	114.0	62.6
60"		99.0	54.3	68.4	37.6	120.0	81.5	102.6	56.4
30"	96"	120.0	101.9	120.0	70.5	120.0	120.0	120.0	105.7
36"		120.0	84.9	106.9	58.8	120.0	120.0	120.0	88.1
42"		120.0	72.8	91.6	50.4	120.0	109.2	120.0	75.5
48"		116.1	63.7	80.2	44.1	120.0	95.6	120.0	66.1
54"		103.2	56.6	71.3	39.2	120.0	84.9	106.9	58.7
60"		92.9	51.0	64.2	35.3	120.0	76.5	96.2	52.9

ANCHOR DESIGN LOAD CAPACITY - PSF

NOMINAL DIMS.		2 ANCHORS @ EACH SIDE OF JAMB OR MULL				3 ANCHORS @ EACH SIDE OF JAMB OR MULL			
		3/8" MAX. SHIM SPACE		5/8" MAX. SHIM SPACE		3/8" MAX. SHIM SPACE		5/8" MAX. SHIM SPACE	
		TYPE 'A'	TYPE 'B'	TYPE 'A'	TYPE 'B'	TYPE 'A'	TYPE 'B'	TYPE 'A'	TYPE 'B'
WIDTH (W)	FRAME HEIGHT	EXT. (+) INT. (-)	EXT. (+) INT. (-)	EXT. (+) INT. (-)	EXT. (+) INT. (-)	EXT. (+) INT. (-)	EXT. (+) INT. (-)	EXT. (+) INT. (-)	EXT. (+) INT. (-)
30"	102"	120.0	95.9	120.0	66.4	120.0	120.0	120.0	99.5
36"		120.0	79.9	100.6	55.3	120.0	119.9	120.0	82.9
42"		120.0	68.5	86.3	47.4	120.0	102.8	120.0	71.1
48"		109.2	59.9	75.5	41.5	120.0	89.9	113.2	62.2
54"		97.1	53.3	67.1	36.9	120.0	79.9	100.6	55.3
30"	108"	120.0	90.6	114.0	62.7	120.0	120.0	120.0	94.0
36"		120.0	75.5	95.0	52.2	120.0	113.3	120.0	78.3
42"		117.9	64.7	81.5	44.8	120.0	97.1	120.0	67.1
48"		103.2	56.6	71.3	39.2	120.0	84.9	106.9	58.7
30"	114"	120.0	85.8	108.0	59.4	120.0	120.0	120.0	89.0
36"		120.0	71.5	90.0	49.5	120.0	107.3	120.0	74.2
42"		111.7	61.3	77.2	42.4	120.0	92.0	115.7	63.6
48"		97.7	53.6	67.5	37.1	120.0	80.5	101.3	55.6
30"	120"	120.0	81.5	102.6	56.4	120.0	120.0	120.0	84.6
36"		120.0	67.9	85.5	47.0	120.0	101.9	120.0	70.5
42"		106.1	58.2	73.3	40.3	120.0	87.4	109.9	60.4
48"		92.9	51.0	64.2	35.3	120.0	76.5	96.2	52.9
30"	126"	120.0	77.6	97.8	53.7	120.0	116.5	120.0	80.5
36"		117.9	64.7	81.5	44.8	120.0	97.1	120.0	67.1
42"		101.1	55.5	69.8	38.4	120.0	83.2	104.7	57.5
48"		88.4	48.5	61.1	33.6	120.0	72.8	91.6	50.3

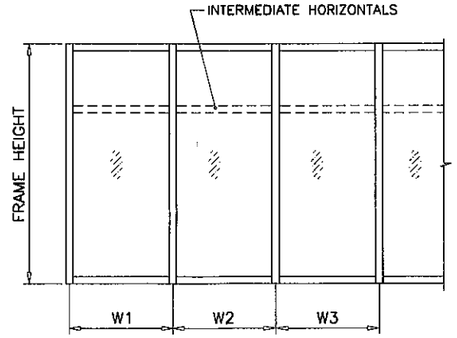

WIDTH (W) = W1
AT FRAME JAMB

WIDTH (W) = $\frac{W2 + W3}{2}$
AT FRAME MULLION

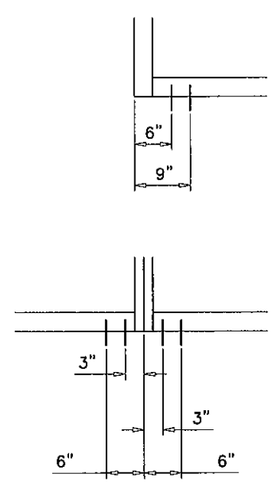

TWO ANCHORS AT EACH SIDE OF MULLION OR JAMB

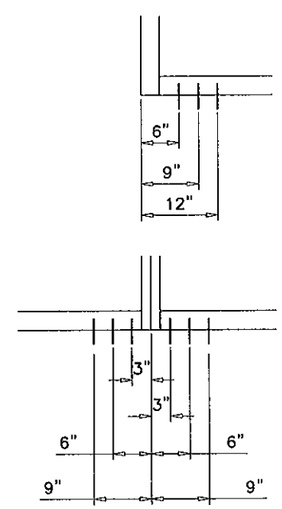

THREE ANCHORS AT EACH SIDE OF MULLION OR JAMB

Engr: JAVAD AHMAD
CIVIL
FLA. PE # 70592
C.A.N. 3538

PRODUCT REVISED
as complying with the Florida Building Code
Acceptance No 12-0410.25
Expiration Date 03/25/2014
By _____
Miami Dade Product Control

MAR 2 2 2012

AL-FAROOQ CORPORATION
ENGINEERS & PRODUCT DEVELOPMENT
1235 S.W. 87 AVE
MIAMI, FLORIDA 33174
TEL. (305) 264-8100 FAX. (305) 262-6978

STORE\W03-103RC

FX-345 ALUM. WINDOW WALL SYSTEM (L.M.I.)

R.C. ALUMINUM INDUSTRIES INC.
2805 N.W. 75 TH AVE.
MIAMI, FL. 33122
TEL. (305) 592-1515 FAX. (305) 592-2184

revisions:

no	date	by	description
F	10.24.08		UPDATED FOR 2007 FBC
G	02.02.09		NO CHANGE THIS SHEET
H	03.17.10		NO CHANGE THIS SHEET
I	03.20.12		NO CHANGE THIS SHEET

date: 11-14-03
scale: -
dr. by: HAMID
chk. by:

drawing no.
W03-103

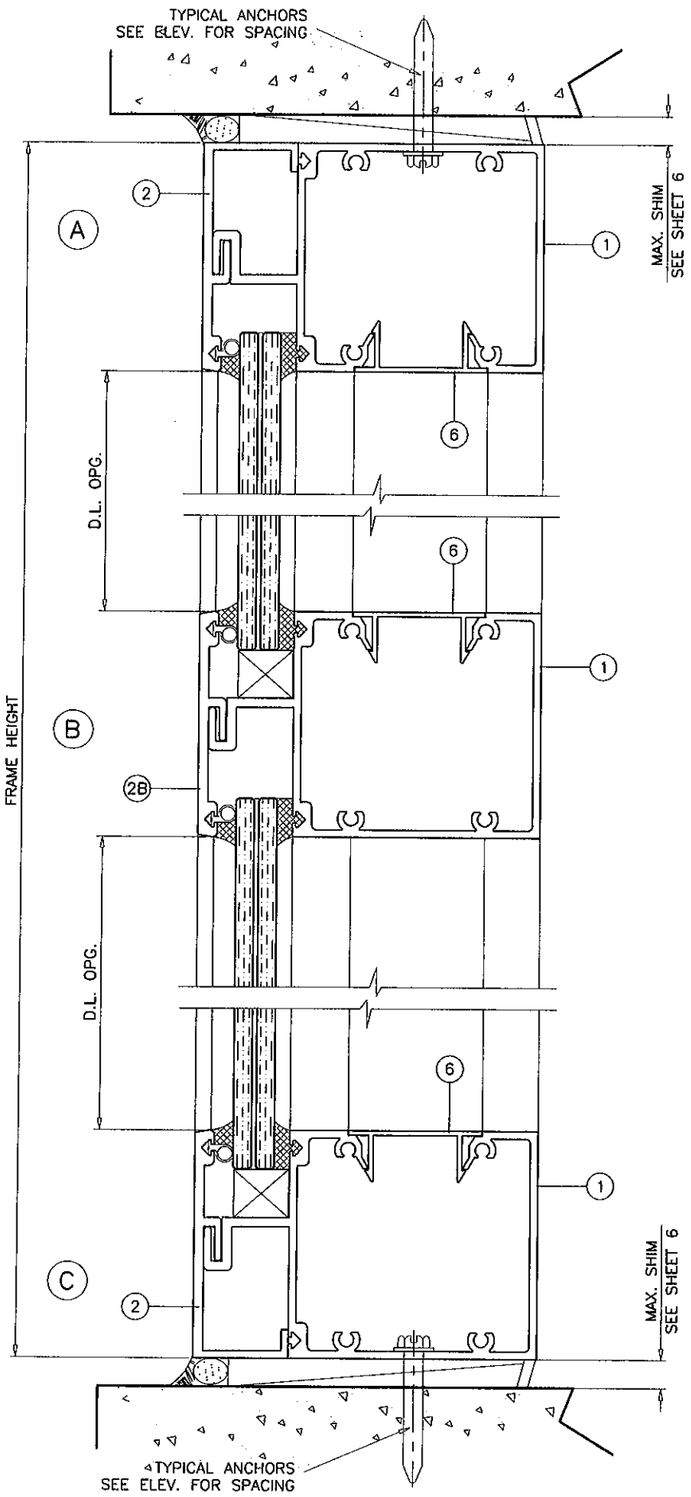

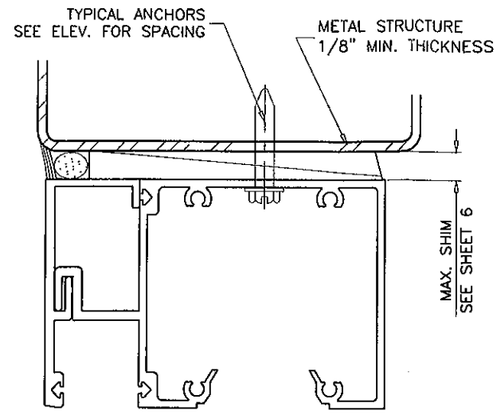

METAL STRUCTURES NOT BY RC ALUMINUM
MUST SUPPORT LOADS IMPOSED BY GLAZING SYSTEM AND TRANSFER THEM TO THE BUILDING STRUCTURE.

TYPICAL ANCHORS: SEE ELEV. FOR SPACING

1/4" HILTI KWIK-CON II (Fu=163 KSI, Fy=157 KSI)

DIRECTLY INTO CONCRETE
1-5/8" MIN. EMBED INTO CONCRETE

1/4" HILTI KWIK-FLEX SELF DRILLING SCREWS (Fu=92 KSI, Fy=120 KSI)
INTO METAL STRUCTURES

STEEL : 1/8" THK. MIN. (Fy = 36 KSI MIN.)
ALUMINUM : 1/8" THK. MIN. (6063-T6 MIN.)
(STEEL IN CONTACT WITH ALUMINUM TO BE PLATED OR PAINTED)

ANCHOR EDGE DISTANCES

INTO CONCRETE = 2-1/2" MIN.
INTO METAL STRUCTURE = 3/4" MIN.

CONCRETE f'c = 3000 PSI MIN.
MASONRY f'm = 1600 PSI MIN.

SEALANTS:

ALL FRAME CORNERS AND MULLION SEAMS SEALED WITH SILICONE.

Engr: JAVAD AHMAD
CIVIL
FLA. PE # 70592
C.A.N. 3538

PRODUCT REVISED
as complying with the Florida Building Code
Acceptance No 12-0410.25
Expiration Date 03/25/2014
By
Miami/Dade Product Control

MAR 2 2 2012

AL-FAROOQ CORPORATION
ENGINEERS & PRODUCT DEVELOPMENT
1235 S.W. 87 AVE
MIAMI, FLORIDA 33174
TEL. (305) 264-8100 FAX. (305) 262-6978

STORE\W03-103RC

FX-345 ALUM. WINDOW WALL SYSTEM (L.M.I.)

R.C. ALUMINUM INDUSTRIES INC.
2805 N.W. 75 TH AVE.
MIAMI, FL. 33122
TEL. (305) 592-1515 FAX. (305) 592-2184

revisions:

no	date	by	description
F	10.24.08		UPDATED FOR 2007 FBC
G	02.02.09		NO CHANGE THIS SHEET
H	03.17.10		NO CHANGE THIS SHEET
I	03.20.12		NO CHANGE THIS SHEET

date: 11-14-03
scale: 1/2" = 1"
dr. by: HAMID
chk. by:

drawing no.
W03-103

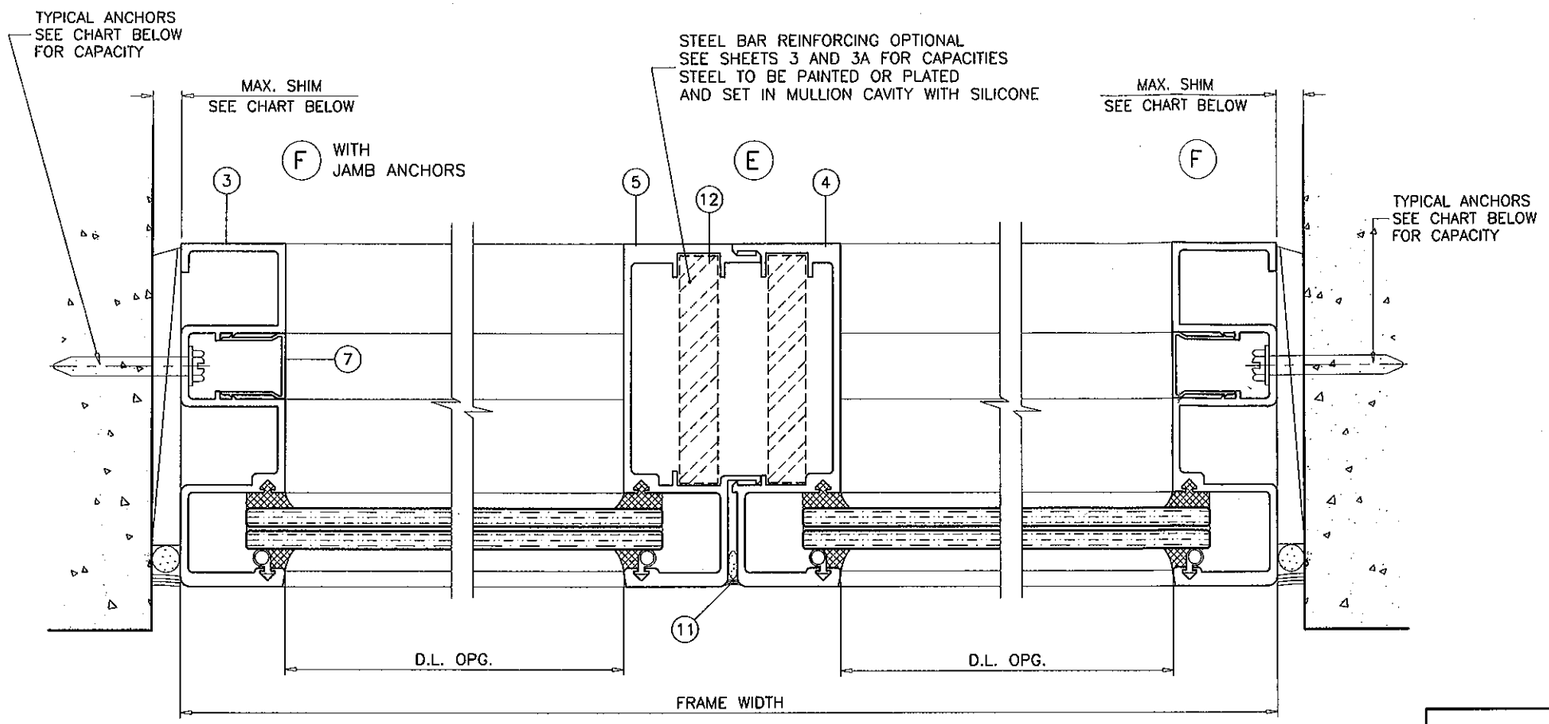

EXTERIOR

JAMB WITH FRAME ANCHORS

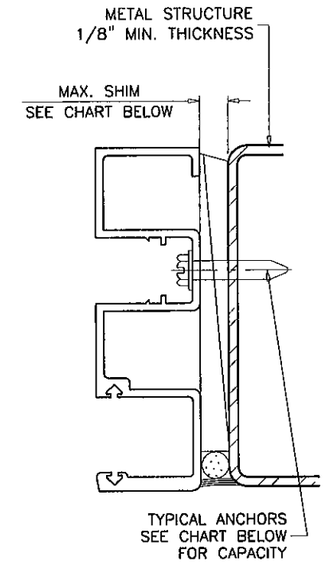

JAMB ANCHORS DESIGN LOAD CAPACITY – PSF 12" O.C. MAX. SPACING						
	1/4" MAX. SHIM SPACE		3/8" MAX. SHIM SPACE		5/8" MAX. SHIM SPACE	
	TYPE 'A'	TYPE 'B'	TYPE 'A'	TYPE 'B'	TYPE 'A'	TYPE 'B'
WIDTH (W)	EXT. (+) INT. (−)	EXT. (+) INT. (−)	EXT. (+) INT. (−)	EXT. (+) INT. (−)	EXT. (+) INT. (−)	EXT. (+) INT. (−)
30"	120.0	120.0	120.0	120.0	120.0	120.0
36"	120.0	120.0	120.0	120.0	120.0	117.0
42"	120.0	120.0	120.0	120.0	120.0	101.0
48"	120.0	120.0	120.0	120.0	120.0	88.0
54"	120.0	120.0	120.0	113.0	120.0	78.0
60"	120.0	120.0	120.0	102.0	120.0	70.0
66"	120.0	120.0	120.0	93.0	117.0	64.0
72"	120.0	120.0	120.0	85.0	107.0	59.0

6" O.C. MAX. ANCHOR SPACING
DESIGN LOAD CAPACITY = 120 PSF
5/8" MAX. SHIM SPACE

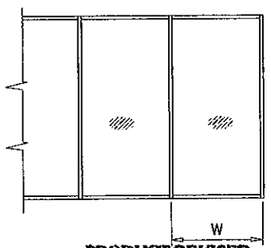

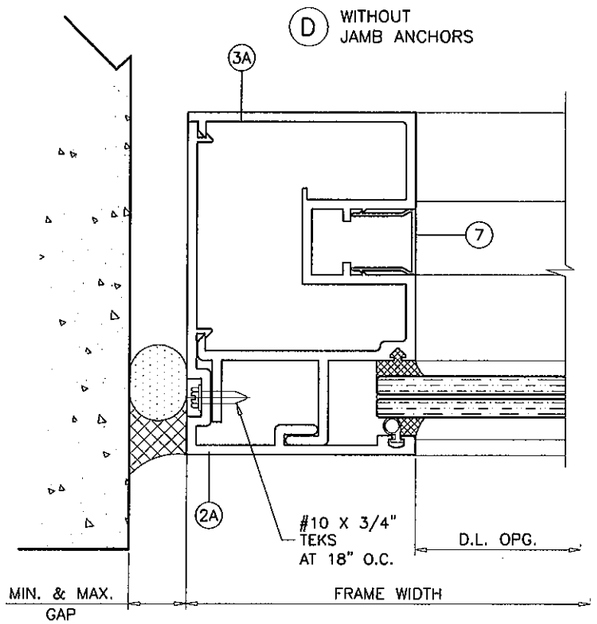

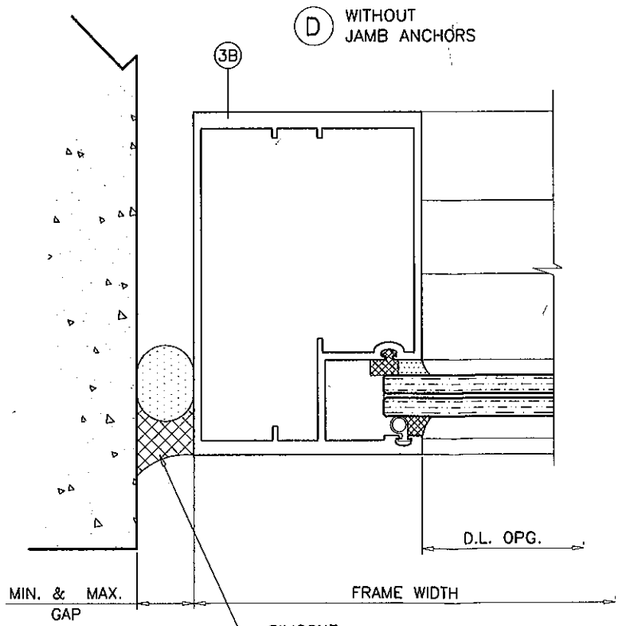

OPTIONAL JAMBS WITHOUT FRAME ANCHORS

SILICONE
DOW CORNING 790
MIN. GAP = 0.0032 X FRAME HT.
MAX. GAP = 0.750 IN.

Engr: JAVAD AHMAD
CIVIL
FLA. PE # 70592
C.A.N. 3538

PRODUCT REVISED
as complying with the Florida Building Code
Acceptance No 12-0410.25
Expiration Date 03/25/2014
By
Miami Dade Product Control

MAR 2 2 2012

AL-FAROOQ CORPORATION
ENGINEERS & PRODUCT DEVELOPMENT
1235 S.W. 87 AVE
MIAMI, FLORIDA 33174
TEL. (305) 264-8100 FAX. (305) 262-6978
STORE\W03-103RC

FX-345 ALUM. WINDOW WALL SYSTEM (L.M.I.)

R.C. ALUMINUM INDUSTRIES INC.
2805 N.W. 75 TH AVE.
MIAMI, FL. 33122
TEL. (305) 592-1515 FAX. (305) 592-2184

revisions:

no	date	by	description
F	10.24.08		NO CHANGE THIS SHEET
G	02.02.09		REV. PER BCCO COMMENTS
H	03.17.10		NO CHANGE THIS SHEET
I	03.20.12		NO CHANGE THIS SHEET

date: 11-14-03
scale: 1/2" = 1"
dr. by: HAMID
chk. by:

drawing no.
W03-103

sheet 8 of 9

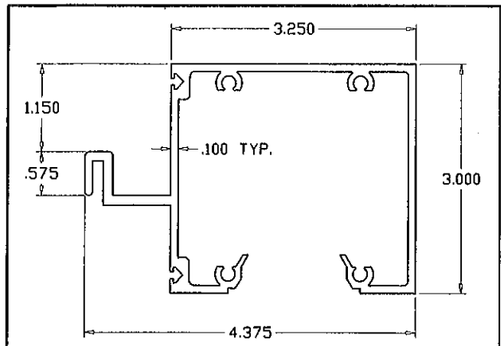

1 FRAME HEAD/SILL

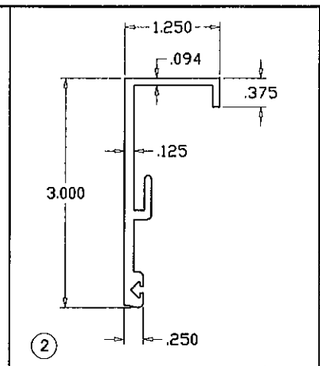

2 GLAZING RETAINER HEAD/SILL

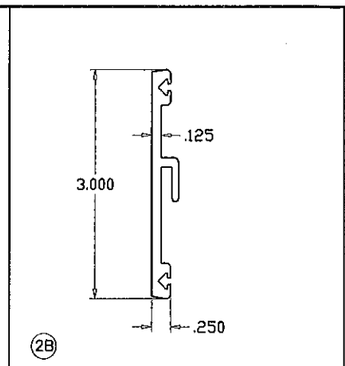

2B GLAZING RETAINER HORIZONTAL

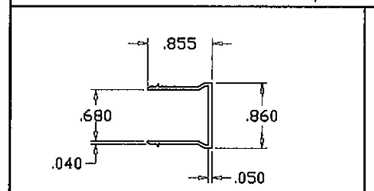

7 SNAP-IN COVER JAMB

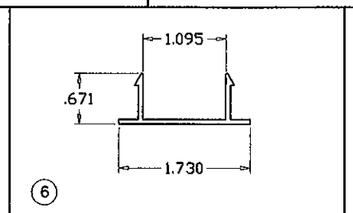

6 SNAP-IN COVER HEAD/SILL

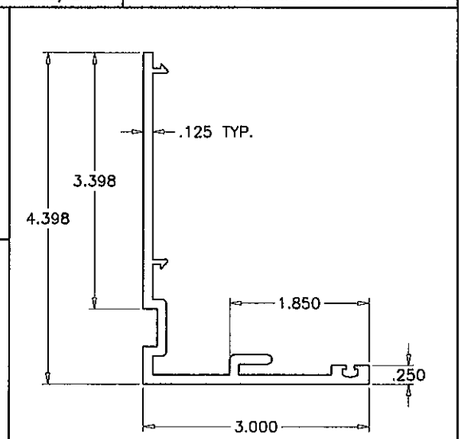

2A GLAZING RETAINER JAMB

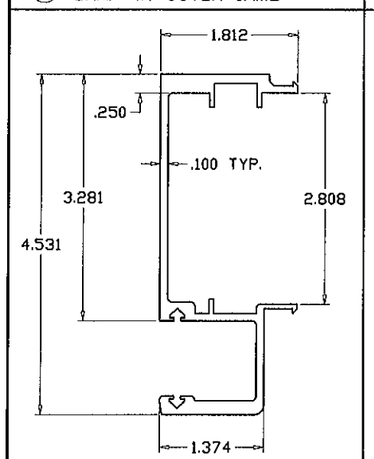

5 MALE MULLION

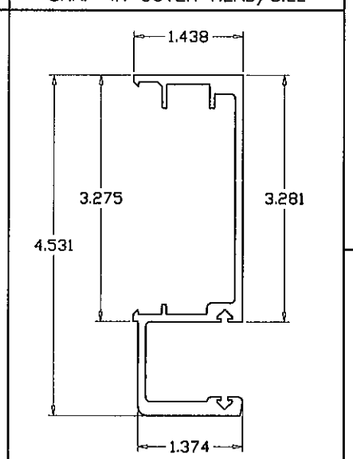

4 FEMALE MULLION

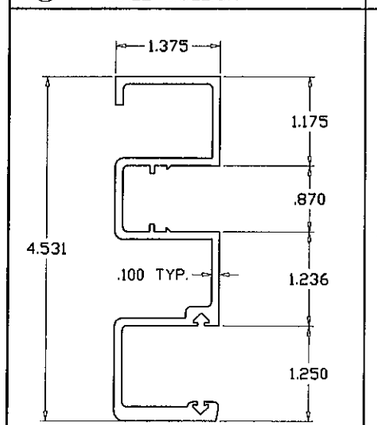

3 FRAME JAMB

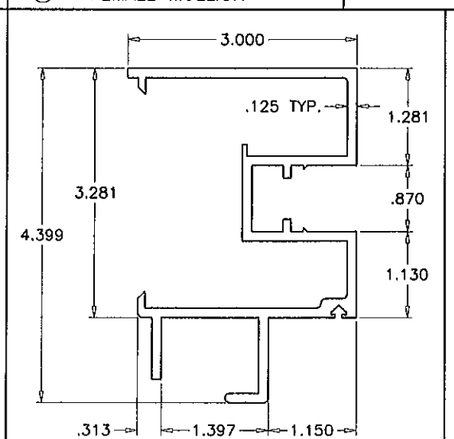

3A ALT. FRAME JAMB 1

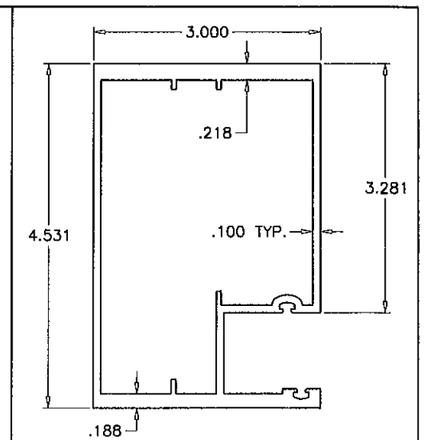

3B ALT. FRAME JAMB 2

ITEM NO.	PART NUMBER	QUANTITY	DESCRIPTION	MATERIAL	MANF./SUPPLIER/REMARKS
1	FX345-04	AS REQD.	FRAME HEAD/SILL	6063-T6	ALUMAX OR EQUIV.
2	FX345-06	AS REQD.	GLAZING RETAINER (HEAD/SILL)	6063-T5	ALUMAX OR EQUIV.
2A	FX345-013	AS REQD.	GLAZING RETAINER (JAMB)	6063-T6	ALUMAX OR EQUIV.
2B	FX345-05	AS REQD.	GLAZING RETAINER (HORIZONTAL)	6063-T5	ALUMAX OR EQUIV.
3	FX345-09	AS REQD.	FRAME JAMB	6063-T6	ALUMAX OR EQUIV.
3A	FX345-012	AS REQD.	ALT. FRAME JAMB 1	6063-T6	ALUMAX OR EQUIV.
3B	FX345-049	AS REQD.	ALT. FRAME JAMB 2	6063-T6	ALUMAX OR EQUIV.
4	FX345-01	AS REQD.	FEMALE MULLION	6063-T6	ALUMAX OR EQUIV.
5	FX345-02	AS REQD.	MALE MULLION	6063-T6	ALUMAX OR EQUIV.
6	FX345-07	AS REQD.	SNAP-IN COVER HEAD/SILL	6063-T5	ALUMAX OR EQUIV.
7	245FX011	AS REQD.	SNAP-IN COVER JAMB	6063-T5	ALUMAX OR EQUIV.
8	WV-8215	AS REQD.	WEDGE GASKET	VINYL	WIBORG
8.1	-	AS REQD.	3/16" X 1/2" NORTON SINGLE FACE TAPE	-	V2100 SERIES
9	WV-3289	AS REQD.	BULB WEATHERSTRIPPING	VINYL	WIBORG
9.1	V-088	AS REQD.	BACK UP VINYL	VINYL	-
9.2	V-089	AS REQD.	1/2" OFFSET GASKET	VINYL	-
10	-	2/ LITE	SETTING BLOCKS (3/4" X 5/8" X 3-1/4")	NEOPRENE	LOWE
11	-	-	SEALANT DOW CORNING 995 OR EQUAV.	SILICONE	-
12	-	AS REQD.	REINFORCING BAR, FULL LENGTH (1/2" X 3")	STEEL	SILICONED IN PLACE
13	-	4/ CORNER	FRAME ASSEMBLY SCREWS	-	# 12 X 1-1/4" HH SMS

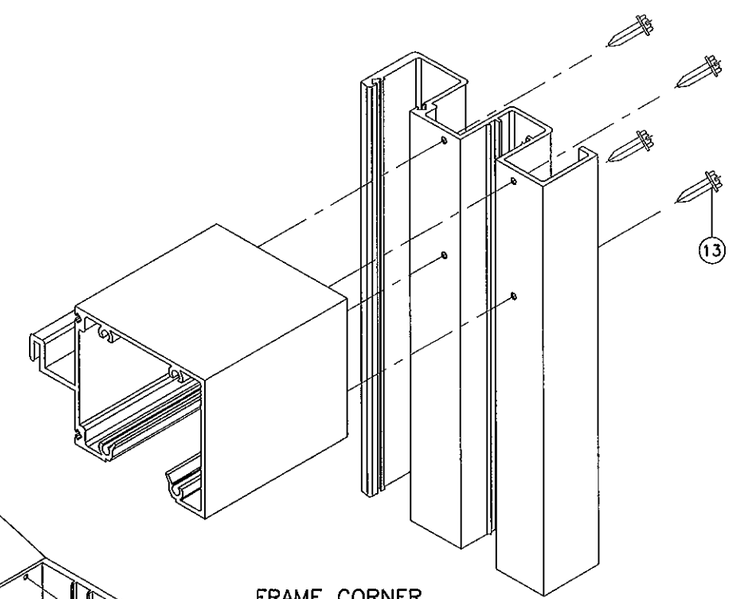

FRAME CORNER

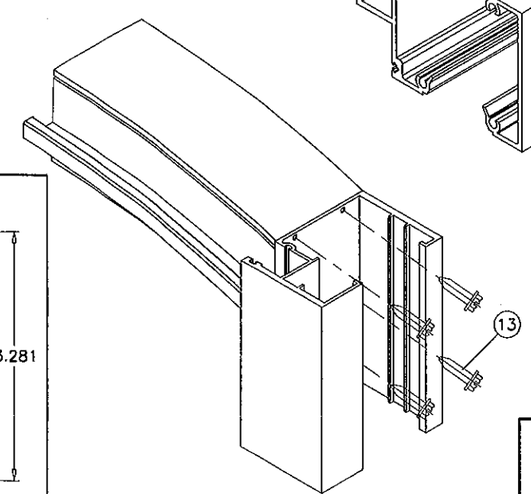

RADIUS CORNER

Engr: JAVAD AHMAD
CIVIL
FLA. PE # 70592
C.A.N. 3538

PRODUCT REVISED
as complying with the Florida
Building Code
Acceptance No. 12-0410.25
Expiration Date 03/25/2014
By
Miami Dade Product Control

MAR 2 2 2012

AL-FAROOQ CORPORATION
ENGINEERS & PRODUCT DEVELOPMENT
1235 S.W. 87 AVE
MIAMI, FLORIDA 33174
TEL (305) 264-8100 FAX. (305) 262-6978
STORE\W03-103RC

FX-345 ALUM. WINDOW WALL SYSTEM (L.M.I.)
R.C. ALUMINUM INDUSTRIES INC.
2805 N.W. 75 TH AVE.
MIAMI, FL. 33122
TEL. (305) 592-1515 FAX. (305) 592-2184

revisions:

no	date	by	description
F	10.24.08		NO CHANGE THIS SHEET
G	02.02.09		NO CHANGE THIS SHEET
H	03.17.10		GLASS OPTIONS E & F ADDED
I	03.20.12		NO CHANGE THIS SHEET

date: 11-14-03
scale: 1/2" = 1"
dr. by: HAMID
chk. by:

drawing no.
W03-103