MIAMI-DADE COUNTY
DEPARTMENT OF PERMITTING, ENVIRONMENT, AND REGULATORY AFFAIRS (PERA)
BOARD AND CODE ADMINISTRATION DIVISION

MIAMI–DADE COUNTY, FLORIDA
PRODUCT CONTROL SECTION
11805 SW 26 Street, Room 208
Miami, Florida 33175–2474
T (786) 315–2590 F (786) 315–2599
www.miamidade.gov/pera/

NOTICE OF ACCEPTANCE (NOA)

R. C. Aluminum Industries, Inc.
2805 NW 75th Ave
Miami, FL 33122

SCOPE:

This NOA is being issued under the applicable rules and regulations governing the use of construction materials. The documentation submitted has been reviewed and accepted by Miami–Dade County PERA–Product Control Section to be used in Miami–Dade County and other areas where allowed by the Authority Having Jurisdiction (AHJ).

This NOA shall not be valid after the expiration date stated below. The Miami–Dade County Product Control Section (In Miami–Dade County) and/or the AHJ (in areas other than Miami–Dade County) reserve the right to have this product or material tested for quality assurance purposes. If this product or material fails to perform in the accepted manner, the manufacturer will incur the expense of such testing and the AHJ may immediately revoke, modify, or suspend the use of such product or material within their jurisdiction. PERA reserves the right to revoke this acceptance, if it is determined by Miami–Dade County Product Control Section that this product or material fails to meet the requirements of the applicable building code.

This product is approved as described herein, and has been designed to comply with the Florida Building Code, including the High Velocity Hurricane Zone.

DESCRIPTION: Series "HP–3060/ 3070" Aluminum Projected–Out Window – S.M.I.

APPROVAL DOCUMENT: Drawing No. **W04–32,** titled "HP 3060/ 3070 Alum. Projected Window (S.M.I.)", sheets 1 through 8 of 8, prepared by AL–Farooq Corporation, with latest revised **"D"** dated 03/20/12, signed and sealed by Javad Ahmad, P. E., bearing the Miami–Dade County Product Control Revision stamp with the Notice of Acceptance number and Expiration date by the Miami–Dade County Product Control Section.

MISSILE IMPACT RATING: Small Missile Impact Resistant

LABELING: Each unit shall bear a permanent label with the manufacturer's name or logo, city, state, series and following statement: "Miami–Dade County Product Control Approved" unless otherwise noted herein.

RENEWAL of this NOA shall be considered after a renewal application has been filed and there has been no change in the applicable building code negatively affecting the performance of this product.

TERMINATION of this NOA will occur after the expiration date or if there has been a revision or change in the materials, use, and/ or manufacture of the product or process. Misuse of this NOA as an endorsement of any product, for sales, advertising or any other purposes shall automatically terminate this NOA. Failure to comply with any section of this NOA shall be cause for termination and removal of NOA.

ADVERTISEMENT: The NOA number preceded by the words Miami–Dade County, Florida, and followed by the expiration date may be displayed in advertising literature. If any portion of the NOA is displayed, then it shall be done in its entirety.

INSPECTION: A copy of this entire NOA shall be provided to the user by the manufacturer or its distributors and shall be available for inspection at the job site at the request of the Building Official.

This NOA **revises NOA No. 10–0426.06** and consists of this page 1, evidence pages E–1 and E–2, as well as approval document mentioned above.

The submitted documentation was reviewed by **Jaime D. Gascon, P. E.**

MIAMI-DADE COUNTY APPROVED

J. Gascon
6/26/12

NOTICE OF ACCEPTANCE: EVIDENCE SUBMITTED

A. DRAWINGS

1. Manufacturer's die drawings and sections.
   (Submitted under previous NOA No. 09–0722.09)
2. Drawing No. **W04–32,** titled "HP 3060/ 3070 Alum. Projected Window (S.M.I.)", sheets 1 through 8 of 8, prepared by AL–Farooq Corporation, with latest revised "**D**" dated 03/20/12, signed and sealed by Javad Ahmad, P. E.

B. TESTS

1. Test reports on: 1) Air Infiltration Test, per FBC, TAS 202–94
   2) Uniform Static Air Pressure Test, Loading per FBC TAS 202–94
   3) Water Resistance Test, per FBC, TAS 202–94
   4) Large Missile Impact Test per FBC, TAS 201–94
   5) Cyclic Wind Pressure Loading per FBC, TAS 203–94
   6) Forced Entry Test, per FBC 2411 3.2.1, TAS 202–94
   7) Impact Test per FBC, ANSI Z97.1–04/ 16 CFR 1201

   along with marked–up drawings and installation diagram of aluminum window wall system with projected–out window, prepared by Fenestration Testing Laboratory, Inc., Test Report No. **FTL–5739**, dated 01/20/09, signed and sealed by Carlos S. Rionda, P. E.
   (Submitted under previous NOA No. 09–0722.09)
2. Test reports on: 1) Air Infiltration Test, per FBC, TAS 202–94
   2) Uniform Static Air Pressure Test, Loading per FBC TAS 202–94
   3) Water Resistance Test, per FBC, TAS 202–94
   4) Large Missile Impact Test per FBC, TAS 201–94
   5) Cyclic Wind Pressure Loading per FBC, TAS 203–94
   6) Forced Entry Test, per FBC 2411 3.2.1 and TAS 202–94

   along with marked–up drawings and installation diagram of aluminum window wall system with projected–out window, prepared by Fenestration Testing Laboratory, Inc., Test Report No. **FTL–4313**, dated 09/28/04, signed and sealed by Edmundo J. Largaespada, P. E.
   (Submitted under previous NOA No. 05–0203.01)

C. CALCULATIONS

1. Anchor verification calculations and structural analysis, complying with FBC–2007, prepared by AL–Farooq Corporation, dated 05/05/09, signed and sealed by Arshad Viqar, P. E.
   (Submitted under previous NOA No. 09–0722.09)
2. **Glazing complies with ASTM E 1300–04**

Jaime D. Gascon, P. E.
Product Control Section Supervisor
NOA No. 12–0410.29
Expiration Date: April 28, 2015
Approval Date: July 05, 2012

NOTICE OF ACCEPTANCE: EVIDENCE SUBMITTED

D. QUALITY ASSURANCE

1. Miami–Dade Department of Permitting, Environment, and Regulatory Affairs (PERA).

E. MATERIAL CERTIFICATIONS

1. Notice of Acceptance No. **11–0624.01** issued to E.I. DuPont DeNemours & Co., Inc. for their "**DuPont Butacite® PVB Interlayer**" dated 09/08/2011, expiring on 12/11/2016.
2. Notice of Acceptance No. **11–0624.01** issued to E.I. DuPont DeNemours & Co., Inc. for their "**DuPont Butacite® PVB Interlayer**" dated 09/08/2011, expiring on 12/11/2016.
3. Notice of Acceptance No. **11–0325.05** issued to Solutia Inc. for their "**Saflex and Vanceva clear and color interlayers**" dated 05/05/11, expiring on 05/21/16.

F. STATEMENTS

1. Statement letter of no financial interest, conformance and compliance with the **FBC–2010**, dated 03/19/12, signed and sealed by Javad Ahmad, P. E.
2. Laboratory compliance letter for Test Report No. **FTL–5739**, issued by Fenestration Testing Laboratory, Inc., dated 01/01/09, signed and sealed by Carlos S. Rionda, P. E. ***(Submitted under previous NOA No. 09–0722.09)***
3. Laboratory compliance letter for Test Report No. **FTL–4313**, issued by Fenestration Testing Laboratory, Inc., dated 11/15/04, both signed and sealed by Edmundo J. Largaespada, P. E.
   (Submitted under previous NOA No. 05–0203.01)

G. OTHERS

1. Notice of Acceptance No. **10–0426.06**, issued to R. C. Aluminum Industries, Inc., for their Series "**HP–3060/3070" Aluminum Projected Window – S.M.I.**", approved on 06/16/10 and expiring on 04/28/15.

Jaime D. Gascon, P. E.
Product Control Section Supervisor
NOA No. 12–0410.29
Expiration Date: April 28, 2015
Approval Date: July 05, 2012

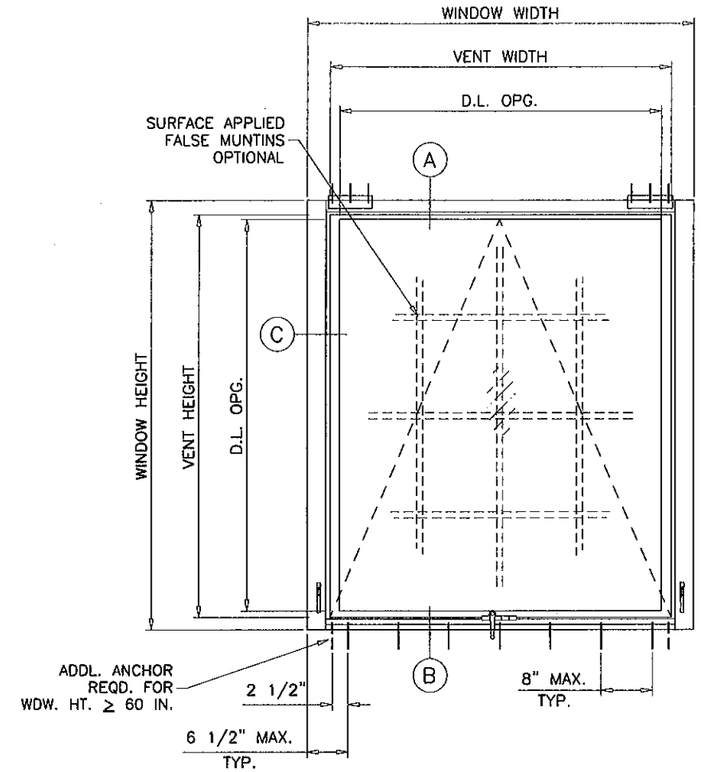

'X' SIZES

VENT WIDTH = WINDOW WIDTH – 7 1/4""
GLASS D.L.O. WIDTH = VENT WIDTH – 3"
VENT HEIGHT = WINDOW HEIGHT – 4 1/4"
GLASS D.L.O. HEIGHT = VENT HEIGHT – 1 3/4"

TYPICAL ELEVATION

(SEE CHART ON SHEET 2 FOR MAX. APPROVED SIZES)
SEE SHEET 3 FOR SPECIAL CONFIGURATIONS

THIS SYSTEM IS RATED FOR SMALL MISSILE IMPACT.
MIAMI–DADE COUNTY APPROVED IMPACT RESISTANT SHUTTERS
REQUIRED FOR INSTALLATIONS UP TO 30 FT. OF GRADE.
SHUTTERS NOT REQD. FOR INSTALLATIONS ABOVE 30 FT. OF GRADE.

HP3060/3070 ALUMINUM PROJECTED WINDOW

APPROVAL APPLIES TO:
SINGLE VENT WINDOWS OF X CONFIGURATION.
PROJECTED/FIXED COMBINATIONS OF X/O, O/X OR O/X/O ETC.
ALSO SIDE BY SIDE COMBINATIONS OF TWO OR MORE WINDOWS.

THIS PRODUCT HAS BEEN DESIGNED AND TESTED TO COMPLY WITH THE REQUIREMENTS OF THE FLORIDA BUILDING CODE INCLUDING HIGH VELOCITY HURRICANE ZONE (HVHZ).

ANCHORS SHALL BE AS LISTED, SPACED AS SHOWN ON DETAILS, ANCHORS EMBEDMENT TO BASE MATERIAL SHALL BE BEYOND WALL DRESSING OR STUCCO.

ANCHORING OR LOADING CONDITIONS NOT SHOWN IN THESE DETAILS ARE NOT PART OF THIS APPROVAL.

MATERIALS INCLUDING BUT NOT LIMITED TO STEEL/METAL SCREWS, THAT COME INTO CONTACT WITH OTHER DISSIMILAR MATERIALS SHALL MEET THE REQUIREMENTS OF THE FLORIDA BLDG. CODE SECTION 2003.8.4.

PRODUCT REVISED
as complying with the Florida
Building Code
Acceptance No 12-0410.29
Expiration Date 04/28/2015
By
Miami Dade Product Control

Engr: JAVAD AHMAD
CIVIL
FLA. PE # 70592
C.A.N. 3538

MAR 2 3 2012

LAMINATED GLASS
SMALL MISSILE IMPACT

AL-FAROOQ CORPORATION
ENGINEERS & PRODUCT DEVELOPMENT
1235 S.W. 87 AVE
MIAMI, FLORIDA 33174
TEL. (305) 264-8100 FAX. (305) 262-6978
STORE\W04-32RC

HP3060/3070 ALUM. PROJECTED WINDOW (S.M.I.)
R.C. ALUMINUM INDUSTRIES INC.
2805 N.W. 75 TH AVE.
MIAMI, FL. 33122
TEL. (305) 592-1515 FAX. (305) 592-2184

revisions:

no	date	by	description
A	05.10.05		NOTES REV.
B	11.02.05		NOTE REV.
C	05.06.09		UPDATED FOR 2007 FBC
D	03.20.12		UPDATED TO 2010 FBC

date: 04-15-04
scale: 1/2"=1'-0"
dr. by: HAMID
chk. by:

drawing no.
W04-32

DESIGN LOAD CAPACITY – PSF SINGLE VENT PROJECTED WINDOW							
VENT SIZES		GLASS TYPE 'A'		GLASS TYPE 'B'		GLASS TYPE 'C'	
WIDTH	HEIGHT	EXT.(+)	INT.(–)	EXT.(+)	INT.(–)	EXT.(+)	INT.(–)
24"	24"	110.0	120.0	120.0	160.0	110.0	110.0
30"		110.0	120.0	120.0	160.0	110.0	110.0
36"		110.0	120.0	120.0	160.0	110.0	110.0
42"		110.0	120.0	120.0	160.0	110.0	110.0
48"		110.0	120.0	87.5	116.6	104.5	104.5
54"		110.0	110.7	60.1	80.1	71.7	71.7
60"		110.0	110.0	43.1	57.5	51.5	51.5
24"	30"	110.0	120.0	120.0	160.0	110.0	110.0
30"		110.0	120.0	120.0	160.0	110.0	110.0
36"		110.0	120.0	120.0	160.0	110.0	110.0
42"		110.0	120.0	117.2	156.3	110.0	110.0
48"		110.0	120.0	–	–	88.9	88.9
54"		110.0	110.0	–	–	60.2	60.2
60"		94.9	94.9	–	–	42.8	42.8
24"	36"	110.0	120.0	120.0	160.0	110.0	110.0
30"		110.0	120.0	120.0	160.0	110.0	110.0
36"		110.0	120.0	120.0	160.0	110.0	110.0
42"		110.0	120.0	108.3	144.4	110.0	110.0
48"		110.0	120.0	–	–	80.0	80.0
54"		110.0	110.0	–	–	53.3	53.3
60"		48.1	57.7	–	–	37.4	37.4
24"	42"	100.0	120.0	98.3	131.1	110.0	110.0
30"		100.0	120.0	–	–	110.0	110.0
36"		100.0	120.0	–	–	110.0	110.0
42"		100.0	120.0	–	–	110.0	110.0
48"		97.0	116.3	–	–	75.4	75.4
54"		63.2	75.8	–	–	49.1	49.1
60"		43.7	52.5	–	–	34.0	34.0
24"	48"	100.0	120.0	–	–	110.0	110.0
30"		100.0	120.0	–	–	110.0	110.0
36"		100.0	120.0	–	–	110.0	110.0
42"		100.0	120.0	–	–	110.0	110.0
48"		94.9	113.9	–	–	73.8	73.8
54"		60.3	72.3	–	–	46.9	46.9
60"		41.0	49.2	–	–	31.8	31.8
24"	54"	100.0	120.0	–	–	110.0	110.0
30"		100.0	120.0	–	–	110.0	110.0
36"		100.0	120.0	–	–	110.0	110.0
42"		100.0	120.0	–	–	110.0	110.0
48"		94.9	113.9	–	–	73.8	73.8
54"		59.2	71.1	–	–	46.1	46.1
60"		–	–	–	–	30.7	30.7
24"	60"	100.0	120.0	–	–	110.0	110.0
30"		100.0	120.0	–	–	110.0	110.0
36"		100.0	120.0	–	–	110.0	110.0
42"		100.0	120.0	–	–	110.0	110.0
48"		94.9	113.9	–	–	73.8	73.8
54"		–	–	–	–	46.1	46.1
24"	66"	100.0	120.0	–	–	110.0	110.0
30"		100.0	120.0	–	–	110.0	110.0
36"		100.0	120.0	–	–	110.0	110.0
42"		100.0	120.0	–	–	110.0	110.0
48"		–	–	–	–	73.8	73.8

DESIGN LOAD CAPACITY – PSF SINGLE VENT PROJECTED WINDOW							
VENT SIZES		GLASS TYPE 'A'		GLASS TYPE 'B'		GLASS TYPE 'C'	
WIDTH	HEIGHT	EXT.(+)	INT.(–)	EXT.(+)	INT.(–)	EXT.(+)	INT.(–)
24"	72"	100.0	120.0	–	–	110.0	110.0
30"		100.0	119.5	–	–	110.0	110.0
36"		100.0	110.0	–	–	110.0	110.0
42"		76.4	91.7	–	–	110.0	110.0
24"	78"	100.0	113.7	–	–	110.0	110.0
30"		100.0	110.0	–	–	110.0	110.0
36"		100.0	110.0	–	–	110.0	110.0

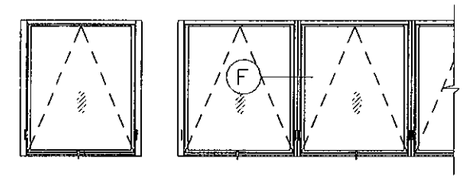

APPROVED CONFIGURATIONS

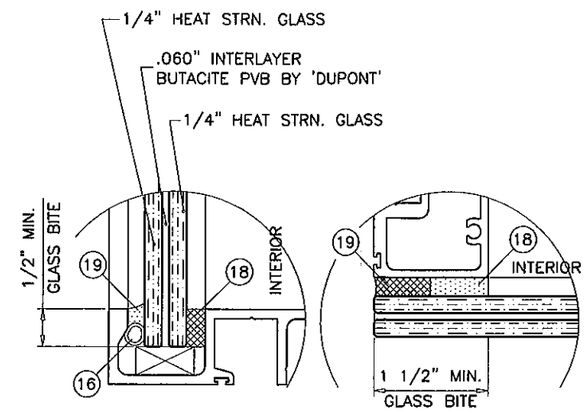

GLASS TYPE 'A'

PRODUCT REVISED
as complying with the Florida
Building Code
Acceptance No 12-0410.29
Expiration Date 04/28/2015
By
Miami Dade Product Control

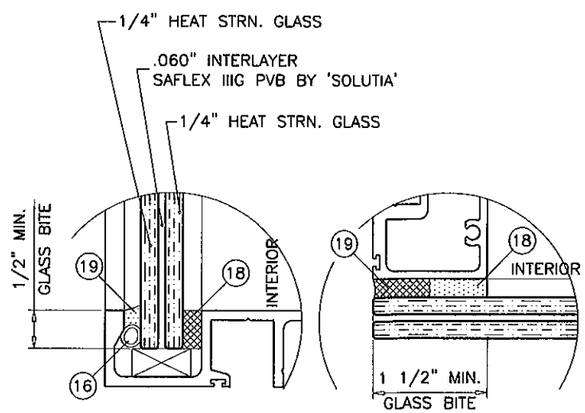

GLASS TYPE 'B'

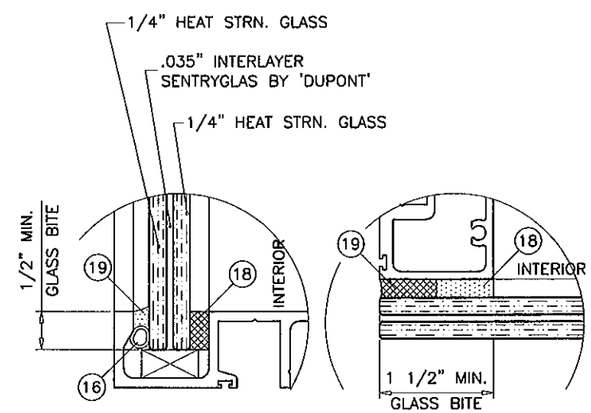

GLASS TYPE 'C'

GLAZING OPTIONS

NOTE:
GLASS CAPACITIES ON THIS SHEET ARE BASED ON ASTM E1300–04 (3 SEC. GUSTS) AND FLORIDA BUILDING COMMISSION DECLARATORY STATEMENT DCA05–DEC–219

Engr: JAVAD AHMAD
CIVIL
FLA. PE # 70592
C.A.N. 3538

MAR 23 2012

AL-FAROOQ CORPORATION
ENGINEERS & PRODUCT DEVELOPMENT
1235 S.W. 87 AVE
MIAMI, FLORIDA 33174
TEL. (305) 264-8100 FAX. (305) 262-6978
STORE\W04–32RC

HP3060/3070 ALUM. PROJECTED WINDOW (S.M.I.)

R.C. ALUMINUM INDUSTRIES INC.
2805 N.W. 75 TH AVE.
MIAMI, FL. 33122
TEL. (305) 592-1515 FAX. (305) 592-2184

revisions:

no	date	by	description
A	05.10.05		NOTES REV.
B	11.02.05		NOTE REV.
C	05.06.09		UPDATED FOR 2007 FBC
D	03.20.12		UPDATED TO 2010 FBC

date: 04–15–04
scale: 1/2"=1'–0"
dr. by: HAMID
chk. by:

drawing no.
W04–32

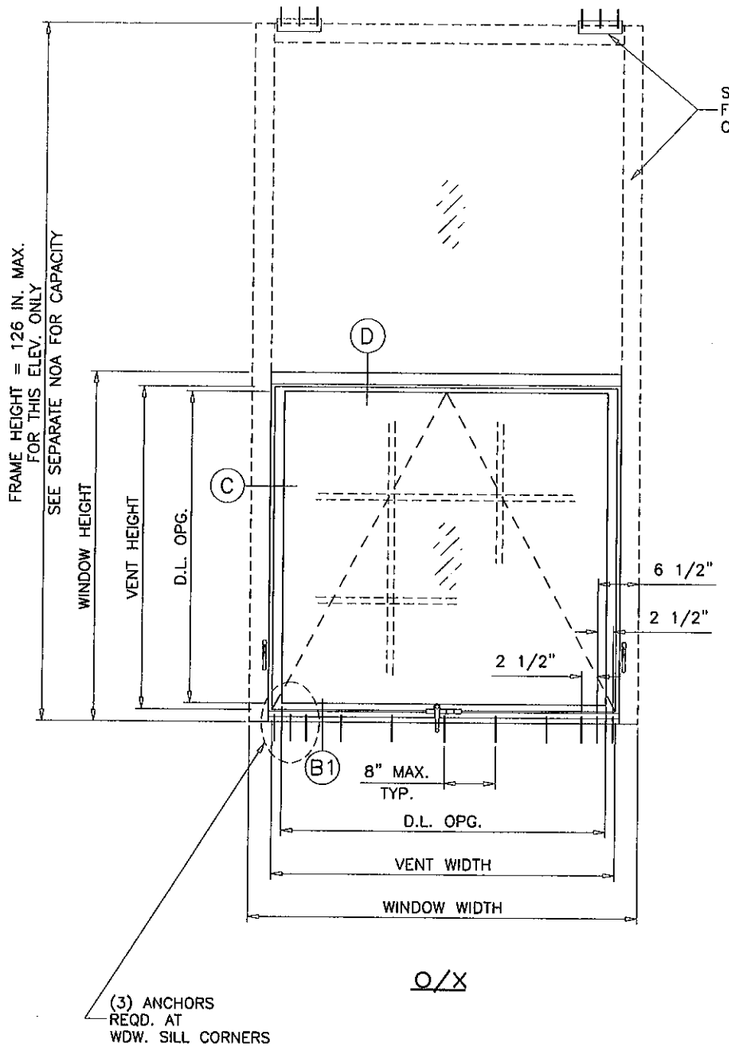

O/X

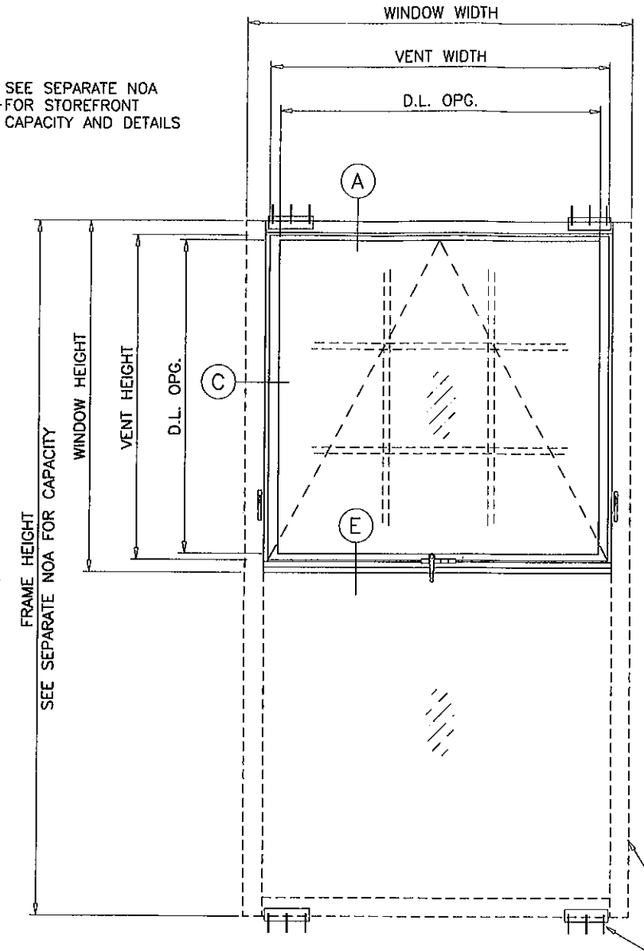

X/O

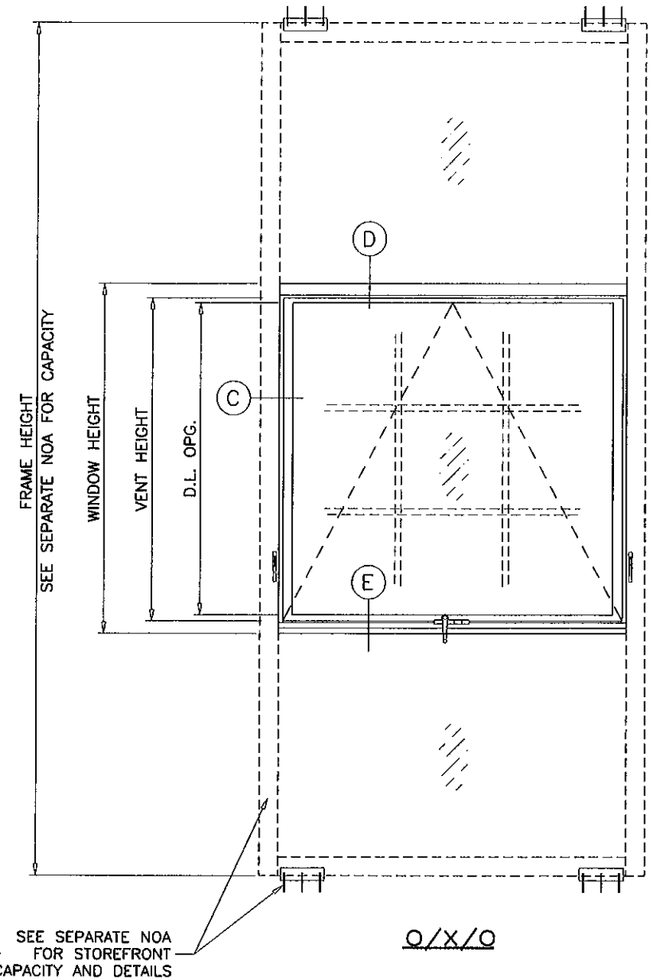

O/X/O

SEE SEPARATE NOA FOR HP3060 OR HP3070 WINDOW WALL SYSTEM DESIGN LOADS AND ANCHORS.

LOWER VALUES FROM PROJECTED WINDOW CAPACITY CHART OR WINDOW WALL SYSTEM NOA WILL APPLY TO ENTIRE SYSTEM.

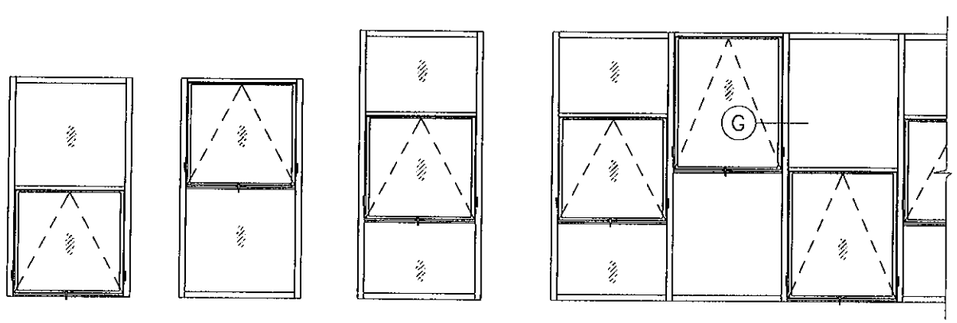

APPROVED CONFIGURATIONS

PRODUCT REVISED
as complying with the Florida
Building Code
Acceptance No 12-0410.29
Expiration Date 04/28/2015
By
Miami Dade Product Control

Engr: JAVAD AHMAD
CIVIL
FLA. PE # 70592
C.A.N. 3538

MAR 23 2012

AL-FAROOQ CORPORATION
ENGINEERS & PRODUCT DEVELOPMENT
1235 S.W. 87 AVE
MIAMI, FLORIDA 33174
TEL. (305) 264-8100 FAX. (305) 262-6978

STORE\W04-32RC

HP3060/3070 ALUM. PROJECTED WINDOW (S.M.I.)

R.C. ALUMINUM INDUSTRIES INC.
2805 N.W. 75 TH AVE.
MIAMI, FL. 33122
TEL. (305) 592-1515 FAX. (305) 592-2184

revisions:

no	date	by	description
A	05.10.05		NOTES REV.
B	11.02.05		NO CHANGE THIS SHEET
C	05.06.09		UPDATED FOR 2007 FBC
D	03.20.12		NO CHANGE THIS SHEET

date: 04-15-04
scale: 1/2"=1'-0"
dr. by: HAMID
chk. by:

drawing no.
W04-32

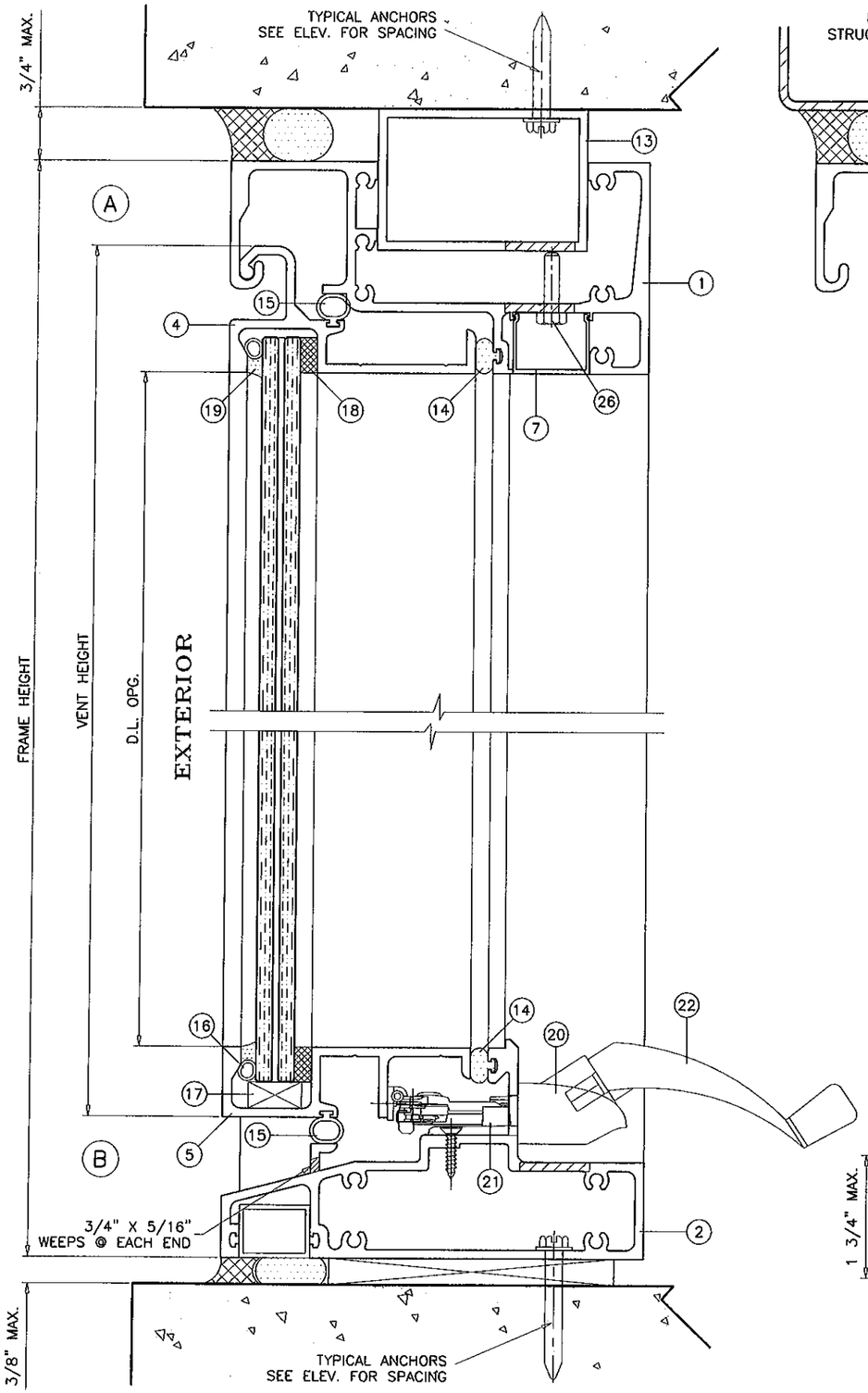

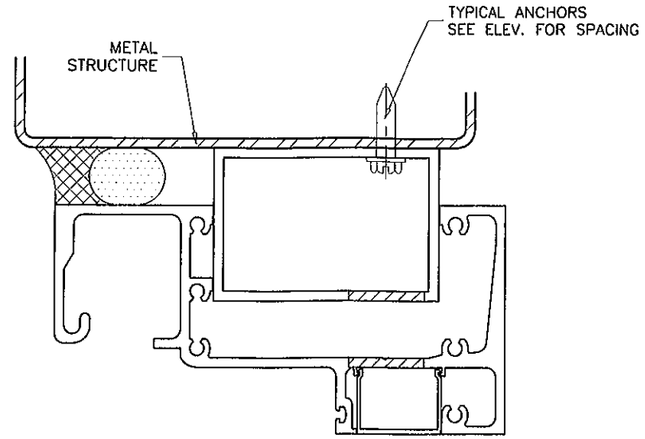

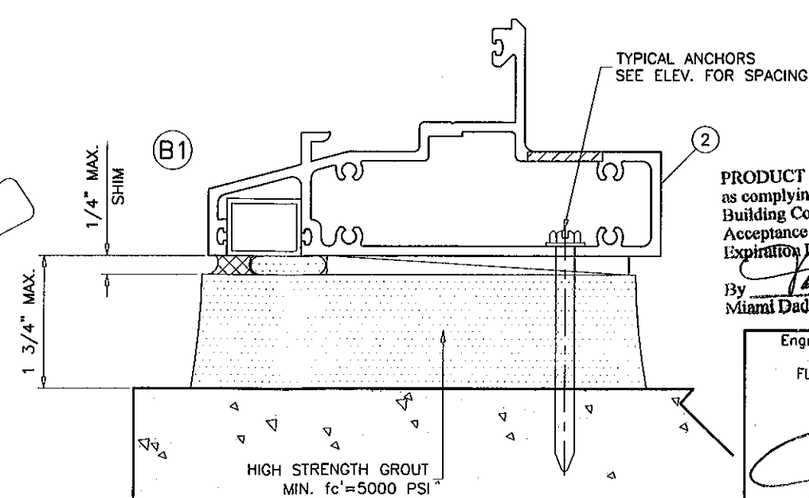

METAL STRUCTURES NOT BY RC ALUMINUM
MUST SUPPORT LOADS IMPOSED BY GLAZING SYSTEM AND TRANSFER THEM TO THE BUILDING STRUCTURE.

TYPICAL ANCHORS: SEE ELEV. FOR SPACING

1/4" HILTI KWIK-CON II (Fu=163 KSI, Fy=157 KSI)

DIRECTLY INTO CONCRETE
1-1/4" MIN. EMBED INTO CONCRETE

1/4" HILTI KWIK-FLEX SELF DRILLING SCREWS (Fu=92 KSI, Fy=120 KSI)
INTO METAL STRUCTURES

STEEL : 1/8" THK. MIN. (Fy = 36 KSI MIN.)
ALUMINUM : 1/8" THK. MIN. (6063-T6 MIN.)
(STEEL IN CONTACT WITH ALUMINUM TO BE PLATED OR PAINTED)

ANCHOR EDGE DISTANCES

INTO CONCRETE = 2-1/2" MIN.
INTO METAL STRUCTURE = 3/4" MIN.

CONCRETE f'c = 3000 PSI MIN.
MASONRY f'm = 1600 PSI MIN.

SEALANTS:

ALL FRAME CORNERS AND MULLION SEAMS SEALED WITH SILICONE.

PRODUCT REVISED
as complying with the Florida
Building Code
Acceptance No 12-0410.29
Expiration Date ~~04.12.12~~ 12/05
By
Miami Dade Product Control

Engr: JAVAD AHMAD
CIVIL
FLA. PE # 70592
C.A.N. 3538

MAR 2 3 2012

AL-FAROOQ CORPORATION
ENGINEERS & PRODUCT DEVELOPMENT
1235 S.W. 87 AVE
MIAMI, FLORIDA 33174
TEL. (305) 264-8100 FAX. (305) 262-6978
STORE\W04-32RC

HP3080/3070 ALUM. PROJECTED WINDOW (S.M.I.)
R.C. ALUMINUM INDUSTRIES INC.
2805 N.W. 75 TH AVE.
MIAMI, FL. 33122
TEL. (305) 592-1515 FAX. (305) 592-2184

revisions:

no	date	by	description
A	05.10.05		SHIMS REV.
B	11.02.05		METAL EDGE DIST. ADDED
C	05.06.09		UPDATED FOR 2007 FBC
D	03.20.12		NO CHANGE THIS SHEET

date: 04-15-04
scale: 1/2" = 1"
dr. by: HAMID
chk. by:

drawing no.
W04-32

ITEM	PART #	QUANTITY	DESCRIPTION	MATERIAL	MANF./SUPPLIER/REMARKS
1	HP3060-049	1	FRAME HEAD	6063-T6	-
2	HP3060-050	1	FRAME SILL/ INTERMEDIATE SILL	6063-T6	-
3	HP3060-036	2	WINDOW JAMB/STOREFRONT JAMB	6063-T6	-
4	HP3060-053	1	VENT HEAD	6063-T6	-
5	HP3060-054	1	VENT SILL	6063-T6	-
6	HP3060-069	2	VENT JAMB	6063-T6	-
7	HP3060-055	1	SNAP COVER HEAD	6063-T6	-
8	HP3060-056	2	VENT JAMB ADAPTER	6063-T6	-
9	HP3060-063	1	INTERMEDIATE HEAD	6063-T6	-
11	-	-	ALUM TUBE SHIM	-	3/4 X 3/4 X 1/16" X 2-1/4" LONG
12	-	-	ALUM TUBE SHIM	-	3/4 X 3/4 X 1/16" X 2-7/8" LONG
13	-	-	ALUM TUBE	-	2 X 3 X 1/8" X 7" LONG
14	V-045	AS REQD.	BULB W'STRIPPING	NEOPRENE	SPONGE
15	V-046	AS REQD.	BULB W'STRIPPING	VINYL	-
16	-	-	5/16" DIA. SPLINE	-	-
17	-	AS REQD.	SETTING BLOCKS AT 6" FROM ENDS	NEOPRENE	1/4 X 3/4 X 4" LONG
18	V2100	AS REQD.	GLAZING TAPE	FOAM	1/4 X 1/2" SINGLE FACE, NORTON
19	795	AS REQD.	GLAZING COMPOUND	SILICONE	DOW CORNING
20	OP05-7540	1	AWNING OPERATOR	-	-
21	OP05-8021	1	OPERATOR SURFACE MOUNT BRACKET	-	-
22	OP05-7800	1	CRANK HANDLE	-	-
23	LU08-7510	2	LOCKING HANDLE	-	-
24	G2-HNDPLT-02	-	LOCKING HANDLE PLATE	-	-
25	GT-555	-	GUIDE HOUSING	-	-
26	-	AS REQD.	LEVELING SCREWS	-	1/4-20 X 3/4" HH MS
27	#8 X 1-1/4"	-	F.H. SMS	ST. STEEL	-
28	#8 X 3/4"	-	F.H. SMS	ST. STEEL	-
29	#10 X 3/4"	2/ JAMB	JAMB ADAPTER SCREWS	ST. STEEL	HEX H. SMS
30	#12 X 1-1/4"	-	FRAME/VENT ASSEMBLY SCREWS	ST. STEEL	HEX H. SMS

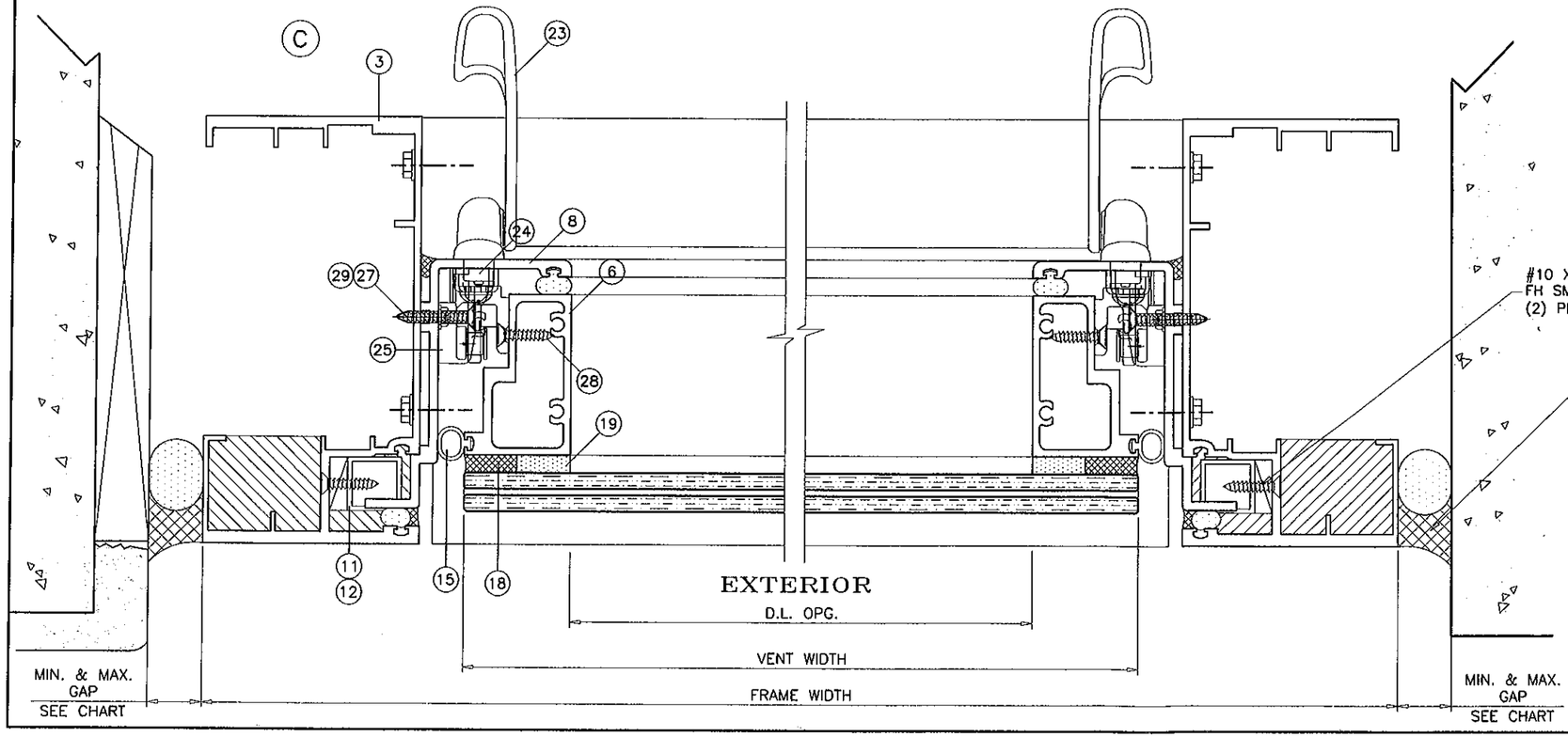

PRODUCT REVISED
as complying with the Florida
Building Code
Acceptance No 12-0410.29
Expiration Date 04/28/2016
By
Miami Dade Product Control

MAX. FRAME HEIGHT	GAP	
	MIN.	MAX.
UPTO 126"	3/8"	3/4"

Engr.: JAVAD AHMAD
CIVIL
FLA. PE # 70592
C.A.N. 3538

MAR 2 3 2012

AL-FAROOQ CORPORATION
ENGINEERS & PRODUCT DEVELOPMENT
1235 S.W. 87 AVE
MIAMI, FLORIDA 33174
TEL. (305) 264-8100 FAX. (305) 262-6978
STORE\W04-32RC

HP3060/3070 ALUM. PROJECTED WINDOW (S.M.I.)

R.C. ALUMINUM INDUSTRIES INC.
2805 N.W. 75 TH AVE.
MIAMI, FL. 33122
TEL. (305) 592-1515 FAX. (305) 592-2184

revisions:

no	date	by	description
A	05.10.05		VENT JAMB REV.
B	11.02.05		NOTE ADDED
C	05.06.09		UPDATED FOR 2007 FBC
D	03.20.12		NO CHANGE THIS SHEET

date: 04-15-04
scale: 1/2" = 1"
dr. by: HAMID
chk. by:

drawing no.
W04-32

sheet 5 of 8

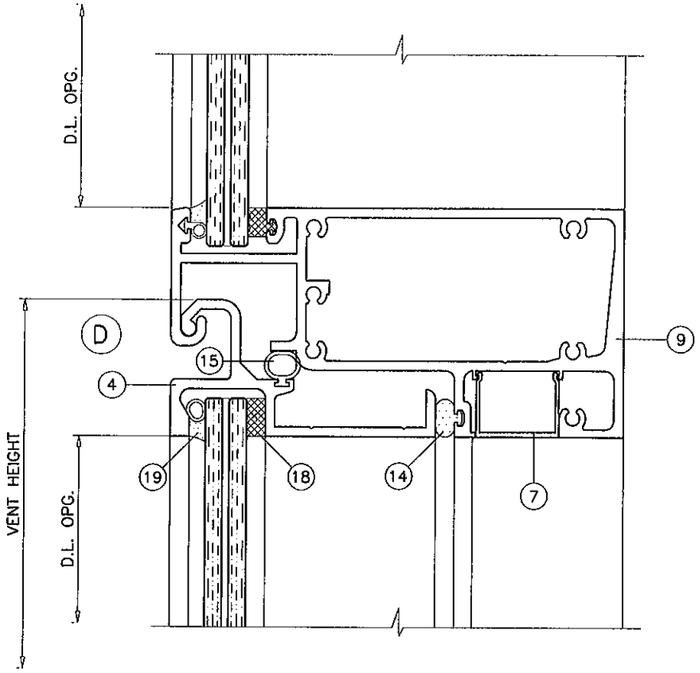

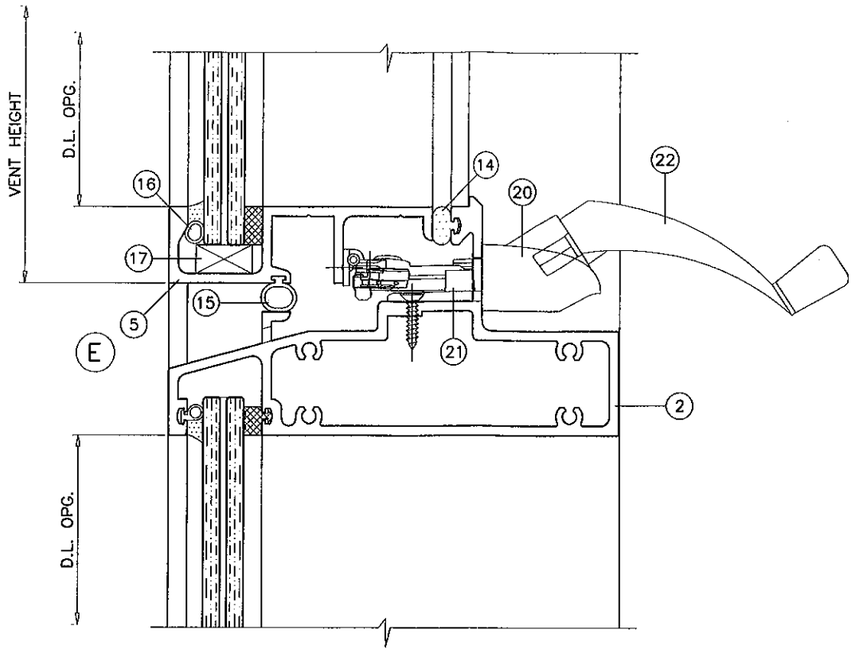

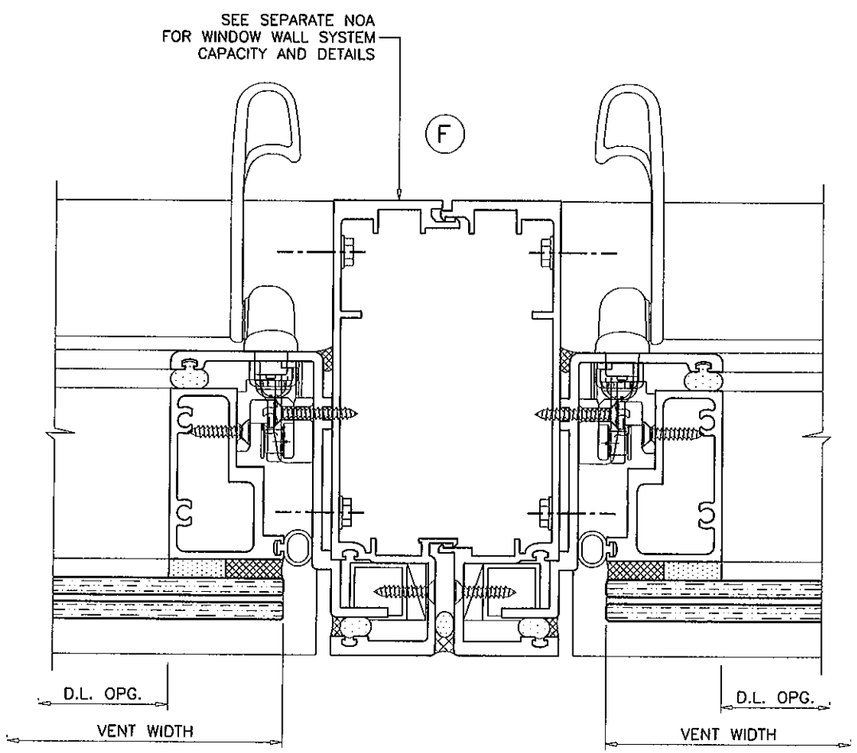

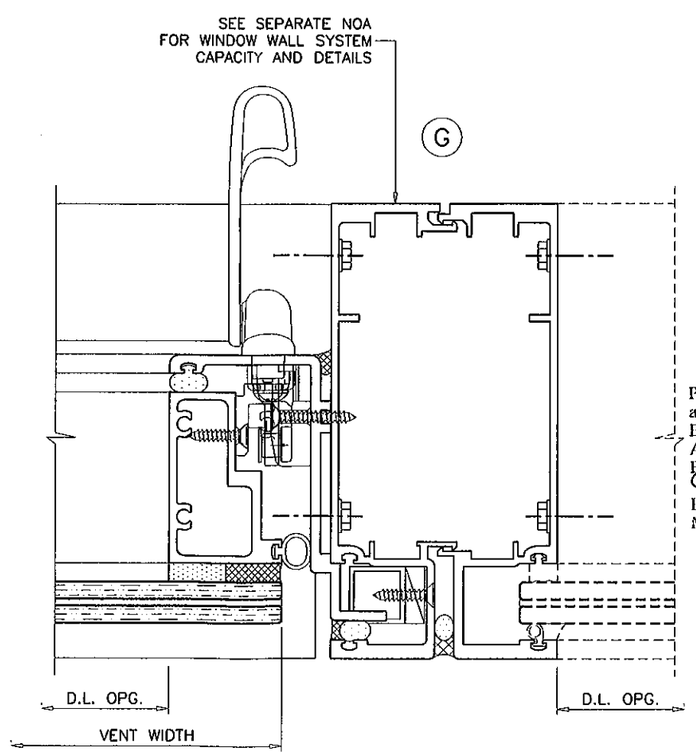

PRODUCT REVISED
as complying with the Florida
Building Code
Acceptance No 12-0410.29
Expiration Date ~~04/28~~/2015
By
Miami Dade Product Control

Engr: JAVAD AHMAD
CIVIL
FLA. PE # 70592
C.A.N. 3538

MAR 2 3 2012

HP3060/3070 ALUM. PROJECTED WINDOW (S.M.I.)

R.C. ALUMINUM INDUSTRIES INC.
2805 N.W. 75 TH AVE.
MIAMI, FL. 33122
TEL. (305) 592-1515 FAX. (305) 592-2184

AL-FAROOQ CORPORATION
ENGINEERS & PRODUCT DEVELOPMENT
1235 S.W. 87 AVE
MIAMI, FLORIDA 33174
TEL. (305) 264-8100 FAX. (305) 262-6978

STORE\W04-32RC

revisions:

no	date	by	description
A	05.10.05		VENT JAMB REV.
B	11.02.05		NO CHANGE THIS SHEET
C	05.06.09		UPDATED FOR 2007 FBC
D	03.20.12		NO CHANGE THIS SHEET

date: 04-15-04
scale: 1/2" = 1"
dr. by: HAMID
chk. by:

drawing no.
W04-32

sheet 6 of 8

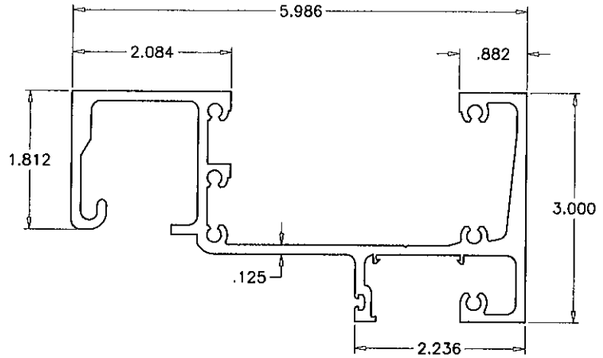

① FRAME HEAD

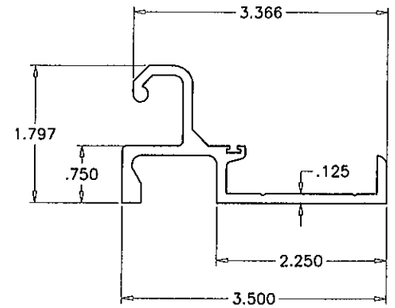

④ VENT HEAD

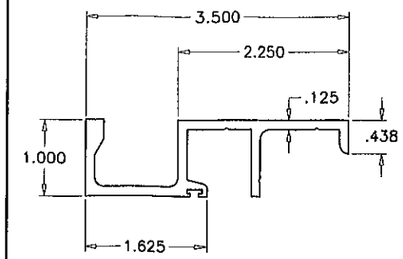

⑤ VENT SILL

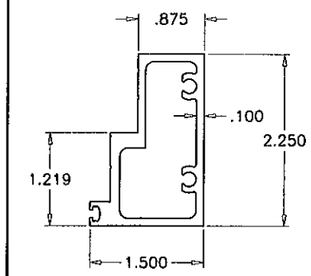

⑥ VENT JAMB

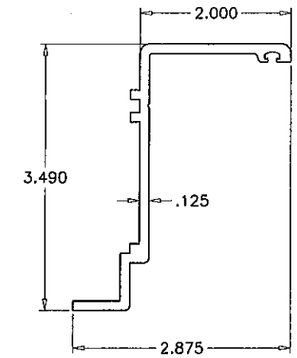

⑧ VENT JAMB ADAPTER

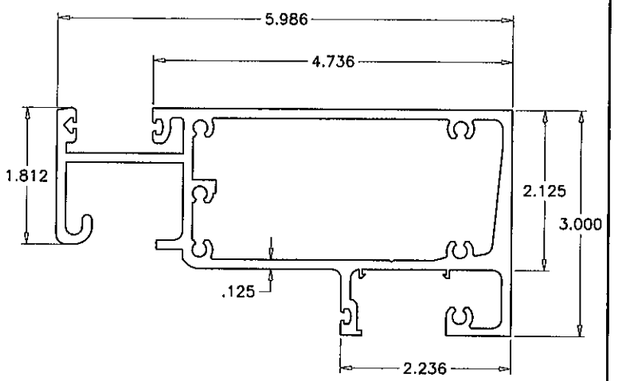

⑨ INTERMEDIATE HEAD

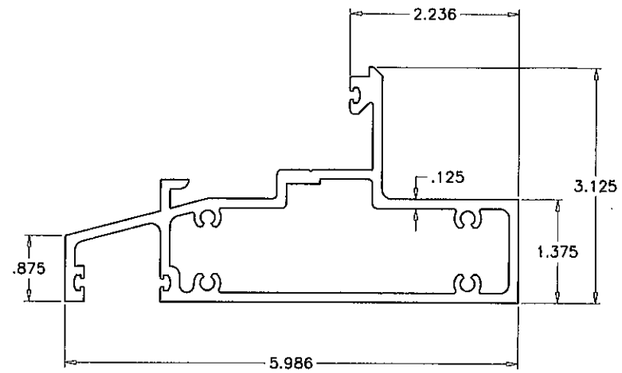

② FRAME SILL/INTERMEDIATE SILL

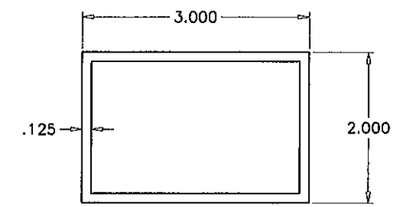

⑬ ALUMINUM TUBE

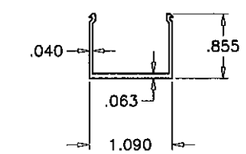

⑦ SNAP-IN COVER

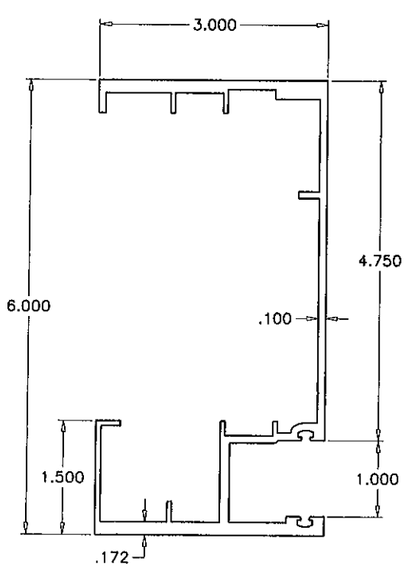

③ FRAME JAMB

PRODUCT REVISED
as complying with the Florida
Building Code
Acceptance No 12-0410.29
Expiration Date 04/28/2015
By
Miami Dade Product Control

Engr: JAVAD AHMAD
CIVIL
FLA. PE # 70592
C.A.N. 3538

MAR 23 2012

AL-FAROOQ CORPORATION
ENGINEERS & PRODUCT DEVELOPMENT
1235 S.W. 87 AVE
MIAMI, FLORIDA 33174
TEL. (305) 264-8100 FAX. (305) 262-6978

STORE W04-32RC

HP3060/3070 ALUM. PROJECTED WINDOW (S.M.I.)

R.C. ALUMINUM INDUSTRIES INC.
2805 N.W. 75 TH AVE.
MIAMI, FL. 33122
TEL. (305) 592-1515 FAX. (305) 592-2184

revisions:

no	date	by	description
A	05.10.05		VENT JAMB REV.
B	11.02.05		NO CHANGE THIS SHEET
C	05.06.09		UPDATED FOR 2007 FBC
D	03.20.12		NO CHANGE THIS SHEET

date: 04-15-04
scale: 1/2" = 1"
dr. by: HAMID
chk. by:

drawing no.
W04-32

sheet 7 of 8

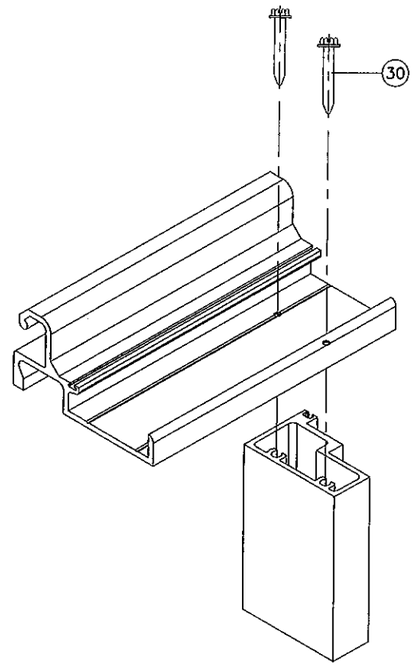

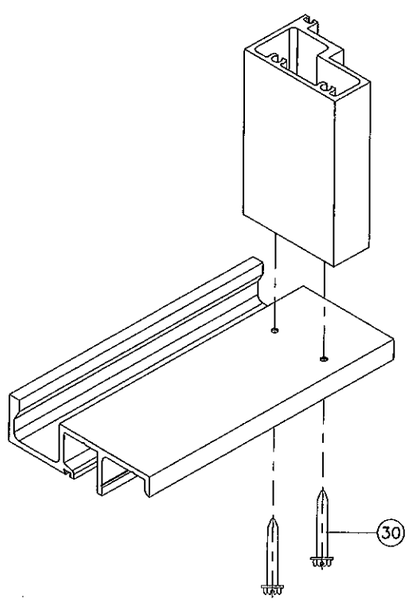

VENT CORNER

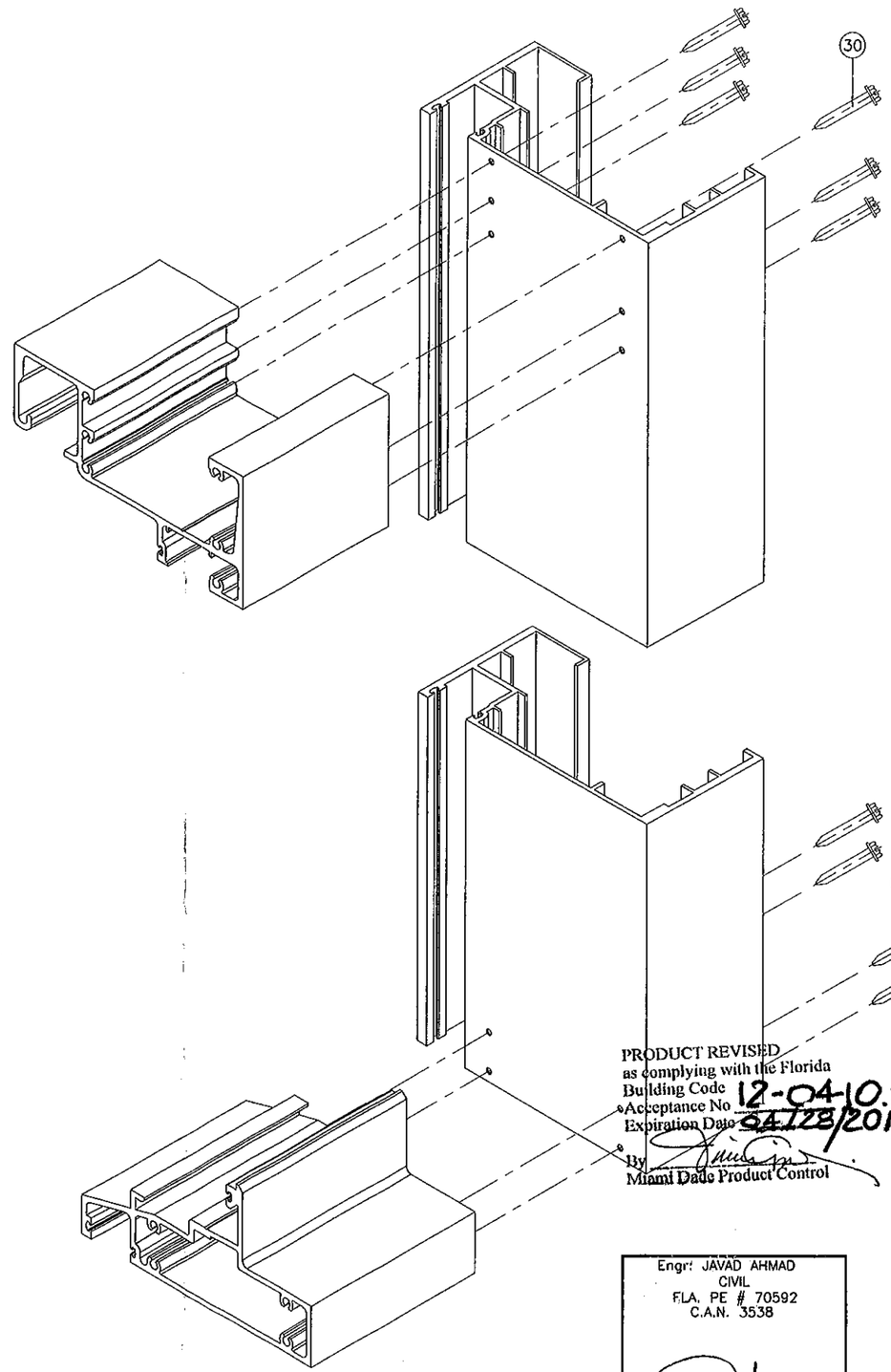

FRAME CORNER

PRODUCT REVISED
as complying with the Florida
Building Code
Acceptance No 12-04-10.29
Expiration Date ~~04/28/2015~~
By
Miami Dade Product Control

Engr: JAVAD AHMAD
CIVIL
FLA. PE # 70592
C.A.N. 3538

MAR 2 3 2012

AL-FAROOQ CORPORATION
ENGINEERS & PRODUCT DEVELOPMENT
1235 S.W. 87 AVE
MIAMI, FLORIDA 33174
TEL. (305) 264-8100 FAX. (305) 262-6978

STORE\W04-32RC

HP3060/3070 ALUM. PROJECTED WINDOW (S.M.I.)

R.C. ALUMINUM INDUSTRIES INC.
2805 N.W. 75 TH AVE.
MIAMI, FL. 33122
TEL. (305) 592-1515 FAX. (305) 592-2184

revisions:

no	date	by	description
A	05.10.05		VENT JAMB REV.
B	11.02.05		NO CHANGE THIS SHEET
C	05.06.09		UPDATED FOR 2007 FBC
D	03.20.12		NO CHANGE THIS SHEET

date: 04-15-04
scale: 1/2" = 1"
dr. by: HAMID
chk. by:

drawing no.
W04-32

sheet 8 of 8