MIAMI-DADE COUNTY
DEPARTMENT OF PERMITTING, ENVIRONMENT, AND REGULATORY AFFAIRS (PERA)
BOARD AND CODE ADMINISTRATION DIVISION

MIAMI-DADE COUNTY
PRODUCT CONTROL SECTION
11805 SW 26 Street, Room 208
Miami, Florida 33175-2474
T (786) 315-2590 F (786) 315-2599
www.miamidade.gov/pera/

NOTICE OF ACCEPTANCE (NOA)

NR Architectural Products
4348 Westroads Drive
West Palm Beach, FL 33407

SCOPE:

This NOA is being issued under the applicable rules and regulations governing the use of construction materials. The documentation submitted has been reviewed and accepted by Miami-Dade County PERA -Product Control Section to be used in Miami Dade County and other areas where allowed by the Authority Having Jurisdiction (AHJ).

This NOA shall not be valid after the expiration date stated below. The Miami-Dade County Product Control Section (In Miami Dade County) and/or the AHJ (in areas other than Miami Dade County) reserve the right to have this product or material tested for quality assurance purposes. If this product or material fails to perform in the accepted manner, the manufacturer will incur the expense of such testing and the AHJ may immediately revoke, modify, or suspend the use of such product or material within their jurisdiction. PERA reserves the right to revoke this acceptance, if it is determined by Miami-Dade County Product Control Section that this product or material fails to meet the requirements of the applicable building code.
This product is approved as described herein, and has been designed to comply with the Florida Building Code, including the High Velocity Hurricane Zone.

DESCRIPTION: Series "6001" Aluminum Sliding Glass Doors – L.M.I.

APPROVAL DOCUMENT: Drawing No. **AD12-03,** titled "Series 6001 Alum Sliding Glass Doors – LMI", sheets 1 through 7 of 7, dated MAR 08, 2012, prepared by MCY Engineering, Inc., signed and sealed by Yiping Wang, P. E., bearing the Miami–Dade County Product Control Revision stamp with the Notice of Acceptance number and expiration date by the Miami–Dade County Product Control Section.

MISSILE IMPACT RATING: Large and Small Missile Impact Resistant

LABELING: Each unit shall bear a permanent label with the manufacturer's name or logo, city, state and series and following statement: "Miami-Dade County Product Control Approved", noted herein.

RENEWAL of this NOA shall be considered after a renewal application has been filed and there has been no change in the applicable building code negatively affecting the performance of this product.

TERMINATION of this NOA will occur after the expiration date or if there has been a revision or change in the materials, use, and/or manufacture of the product or process. Misuse of this NOA as an endorsement of any product, for sales, advertising or any other purposes shall automatically terminate this NOA. Failure to comply with any section of this NOA shall be cause for termination and removal of NOA.

ADVERTISEMENT: The NOA number preceded by the words Miami-Dade County, Florida, and followed by the expiration date may be displayed in advertising literature. If any portion of the NOA is displayed, then it shall be done in its entirety.

INSPECTION: A copy of this entire NOA shall be provided to the user by the manufacturer or its distributors and shall be available for inspection at the job site at the request of the Building Official.
This NOA **revises & renews NOA # 09-0407.05** and consists of this page 1 and evidence pages E-1, as well as approval document mentioned above.
The submitted documentation was reviewed by **Jaime D. Gascon, P.E.**

MIAMI-DADE COUNTY APPROVED

J. Gascon
8/3/12

NOA No 12-0416.02
Expiration Date: April 03, 2018
Approval Date: August 09 , 2012

NOTICE OF ACCEPTANCE: EVIDENCE SUBMITTED

A. DRAWINGS

1. Manufacturer's die drawings and sections (submitted under file # **09-0407.05**)
2. Drawing No. **AD12-03,** titled "Series 6001 Alum Sliding Glass Doors – LMI", sheets 1 through 7 of 7, dated MAR 08, 2012, prepared by MCY Engineering, Inc., signed and sealed by Yiping Wang, P.E.

B. TESTS (submitted under file # **09-0407.05)**

1. Test reports on: 1) Air Infiltration Test, per FBC, TAS 202-94
   2) Uniform Static Air Pressure Test, Loading per FBC TAS 202-94
   3) Water Resistance Test, per FBC, TAS 202-94
   4) Large Missile Impact Test per FBC, TAS 201-94
   5) Cyclic Wind Pressure Loading per FBC, TAS 203-94
   6) Forced Entry Test, per FBC 2411 3.2.1, TAS 202-94

Along with marked–up drawings and installation diagram of an alum sliding Glass door, prepared by Hurricane Testing Laboratory, LLC, Test Report No. **HTL 0242–0517–07**, dated 10/17/07, signed and sealed by Vinu J. Abraham, P. E.

C. CALCULATIONS (submitted under file # **09-0407.05)**

1. Anchor verification calculations and structural analysis, complying with FBC–2007, prepared by Al–Farooq Corporation, dated 11/14/07 and revised on 03/18/09, signed and sealed by late Dr. Humayoun Farooq, P. E.
2. Glazing complies w/ ASTME-1300-02 & -04

D. QUALITY ASSURANCE

1. Miami Dade Department of Permitting, Environment, and Regulatory Affairs (PERA).

E. MATERIAL CERTIFICATIONS

1. Notice of Acceptance No. **11-0624.02** issued to E.I. DuPont DeNemours & Co., Inc. for their **"DuPont Sentry Glass ® Interlayer"**, expiring on 01/14/17.

F. STATEMENTS

1. Statement letter of conformance to FBC 2010 and letter of no financial interest dated March 08, 2012, prepared prepared by MCY Engineering, Inc., signed and sealed by Yiping Wang, P.E.
2. Statement letter dated March 01, 2012, of Succeeding Engineer adopting another Engineer's work as her own and responsibilities per Florida Administrative Code, section 61G15-27.001, signed and sealed by Yiping Wang, P.E.
3. Statement letter of conformance to FBC 2007 and letter of no financial interest, prepared by Al Farooq Corporation, dated 02/14/09, signed and sealed by late Dr. Humayoun Farooq, P.E. (submitted under file # **09-0407.05**)
4. Lab compliance as part of the above referenced test report.

G. OTHER

1. This NOA **revises & renews** NOA # **09-0407.05**, expiring on April 03, 2013.

Jaime D. Gascon, P.E.
Product Control Section Supervisor
NOA No 12-0416.02
Expiration Date: April 03, 2018
Approval Date: August 09, 2012

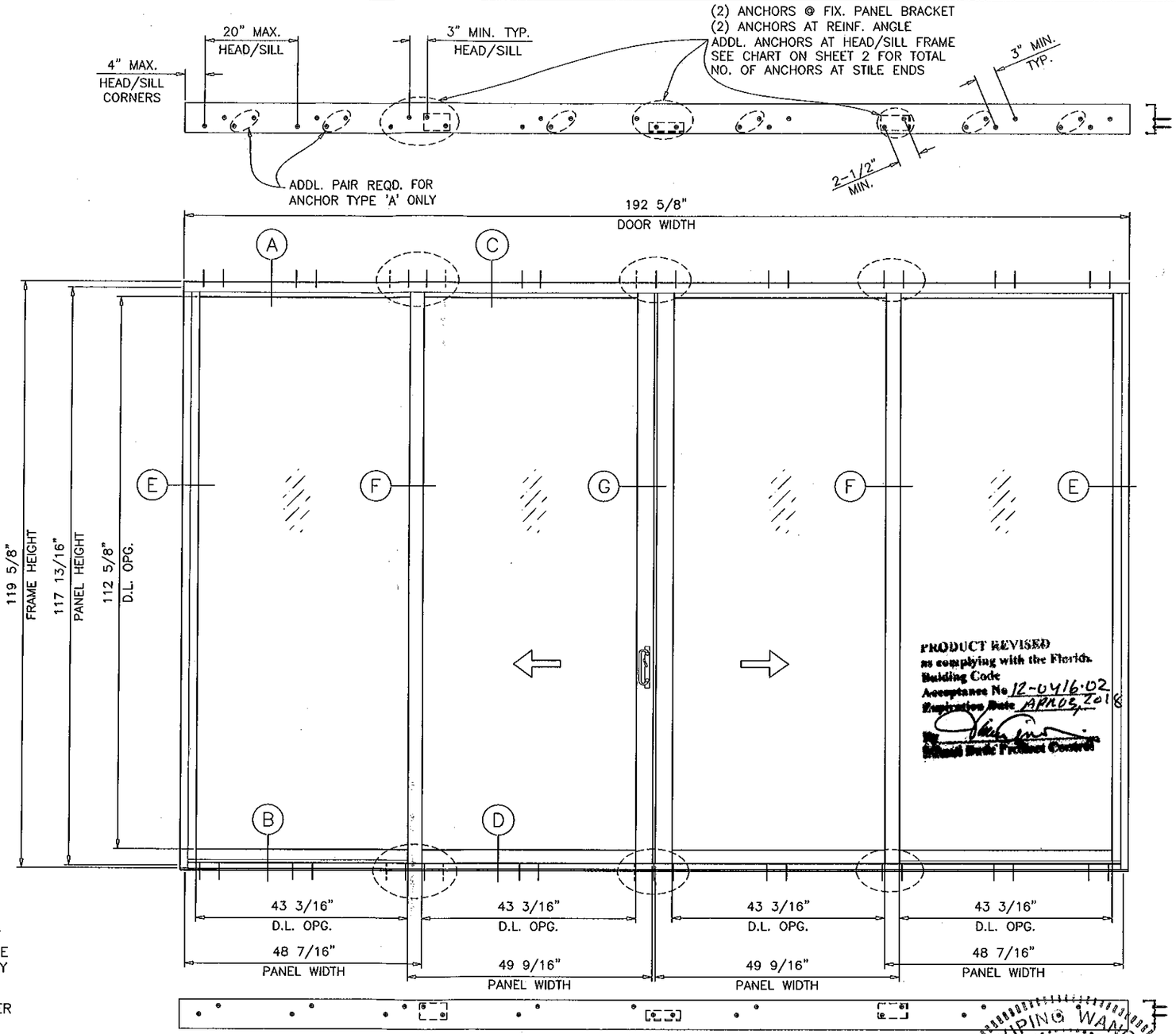

TYPICAL ELEVATION
TESTED UNIT

DOORS GLAZED WITH LAMINATED GLASS RATED FOR LARGE MISSILE IMPACT AND REQUIRE NO SHUTTERS.

SERIES-6001 ALUMINUM SLIDING GLASS DOOR

DESIGN LOAD RATING FOR DOORS TO BE AS PER CHART SHOWN ON SHEET 2.

THIS PRODUCT HAS BEEN DESIGNED AND TESTED TO COMPLY WITH THE REQUIREMENTS OF THE FLORIDA BUILDING CODE INCLUDING HIGH VELOCITY HURRICANE ZONE (HVHZ).

WOOD BUCKS BY OTHERS, MUST BE ANCHORED PROPERLY TO TRANSFER LOADS TO THE STRUCTURE.

ANCHORS SHALL BE AS LISTED, SPACED AS SHOWN ON DETAILS, ANCHORS EMBEDMENT TO BASE MATERIAL SHALL BE BEYOND WALL DRESSING OR STUCCO.

ANCHORING OR LOADING CONDITIONS NOT SHOWN IN THESE DETAILS ARE NOT PART OF THIS APPROVAL.

A LOAD DURATION INCREASE IN ALLOWABLE STRESS IS USED IN DESIGN OF ANCHORS INTO WOOD ONLY.

MATERIALS INCLUDING BUT NOT LIMITED TO STEEL/METAL SCREWS, THAT COME INTO CONTACT WITH OTHER DISSIMILAR MATERIALS SHALL MEET THE REQUIREMENTS OF FLORIDA BUILDING CODE 2003.8.4

LAMINATED GLASS
LARGE MISSILE IMPACT

UNANCHORED JAMBS COMPLY WITH DEFLECTION OF L/180 AND ALLOWABLE STRESS LIMITATION

MAR 08 2012

LIPING WANG
LICENSED P.E.
FLORIDA REGISTRATION
No PE 58983
C.A.N. 28677
STATE OF FLORIDA
PROFESSIONAL ENGINEER

REVISIONS	
NO DATE	DESCRIPTION

MCY ENGINEERING, INC.
GLAZING CONSULTANTS
8501 SW 124 AVE. STE. 205A
MIAMI, FL. 33183
P: 305.271.0117
F: 786.573.5063
www.MCYEngineering.com
MCY.Engineering@Att.net

NRAP SERIES 6001 SLIDING GLASS DOOR (L.M.I.)

NR ARCHITECTURAL PRODUCTS INC.
4348 WESTROADS DRIVE
WEST PALM BEACH, FL. 33407
P: (561) 844 - 1121 F: (561) 844 - 6131

DATE	02-20-12
SCALE	AS NOTED
DRAWN	S.L.
PROJECT	12-026

DRAWING NO.
AD12-03

SHEET 1 of 7

DESIGN LOAD CAPACITY – PSF

PANEL WIDTH NOMINAL INCHES	DOOR HEIGHT INCHES	ANCHORS TYPE 'A' 4 ANCHORS EXT. (+) INT. (–)	ANCHORS TYPE 'A' 5 ANCHORS EXT. (+) INT. (–)	ANCHORS TYPE 'A' 6 ANCHORS EXT. (+) INT. (–)	ANCHORS TYPE 'B' 2 ANCHORS EXT. (+) INT. (–)	ANCHORS TYPE 'B' 3 ANCHORS EXT. (+) INT. (–)	ANCHORS TYPE 'B' 4 ANCHORS EXT. (+) INT. (–)	ANCHORS TYPE 'C' 2 ANCHORS EXT. (+) INT. (–)	ANCHORS TYPE 'C' 3 ANCHORS EXT. (+) INT. (–)	ANCHORS TYPE 'C' 4 ANCHORS EXT. (+) INT. (–)	ANCHORS TYPE 'D' 3 ANCHORS EXT. (+) INT. (–)	ANCHORS TYPE 'D' 4 ANCHORS EXT. (+) INT. (–)	ANCHORS TYPE 'D' 5 ANCHORS EXT. (+) INT. (–)
36	80	100.0	100.0	100.0	100.0	100.0	100.0	100.0	100.0	100.0	100.0	100.0	100.0
42		100.0	100.0	100.0	100.0	100.0	100.0	100.0	100.0	100.0	100.0	100.0	100.0
48		97.3	100.0	100.0	100.0	100.0	100.0	100.0	100.0	100.0	100.0	100.0	100.0
54		91.4	100.0	100.0	100.0	100.0	100.0	100.0	100.0	100.0	100.0	100.0	100.0
60		87.2	100.0	100.0	100.0	100.0	100.0	100.0	100.0	100.0	100.0	100.0	100.0
36	84	100.0	100.0	100.0	100.0	100.0	100.0	100.0	100.0	100.0	100.0	100.0	100.0
42		98.8	100.0	100.0	100.0	100.0	100.0	100.0	100.0	100.0	100.0	100.0	100.0
48		90.8	100.0	100.0	100.0	100.0	100.0	100.0	100.0	100.0	100.0	100.0	100.0
54		85.0	100.0	100.0	99.8	100.0	100.0	100.0	100.0	100.0	100.0	100.0	100.0
60		80.7	100.0	100.0	94.8	100.0	100.0	100.0	100.0	100.0	100.0	100.0	100.0
36	90	100.0	100.0	100.0	100.0	100.0	100.0	100.0	100.0	100.0	100.0	100.0	100.0
42		90.2	100.0	100.0	100.0	100.0	100.0	100.0	100.0	100.0	100.0	100.0	100.0
48		82.5	100.0	100.0	97.0	100.0	100.0	100.0	100.0	100.0	100.0	100.0	100.0
54		76.9	96.1	100.0	90.3	100.0	100.0	100.0	100.0	100.0	95.5	100.0	100.0
60		72.6	90.8	100.0	85.4	100.0	100.0	100.0	100.0	100.0	90.2	100.0	100.0
36	96	93.1	100.0	100.0	100.0	100.0	100.0	100.0	100.0	100.0	100.0	100.0	100.0
42		83.0	100.0	100.0	97.6	100.0	100.0	100.0	100.0	100.0	100.0	100.0	100.0
48		75.7	94.6	100.0	88.9	100.0	100.0	100.0	100.0	100.0	94.0	100.0	100.0
54		70.2	87.7	100.0	82.5	100.0	100.0	100.0	100.0	100.0	87.2	100.0	100.0
60		66.0	82.5	99.1	77.6	100.0	100.0	96.0	100.0	100.0	82.0	100.0	100.0
36	102	86.5	100.0	100.0	100.0	100.0	100.0	100.0	100.0	100.0	100.0	100.0	100.0
42		76.9	96.1	100.0	90.3	100.0	100.0	100.0	100.0	100.0	95.5	100.0	100.0
48		69.8	87.3	100.0	82.1	100.0	100.0	100.0	100.0	100.0	86.8	100.0	100.0
54		64.6	80.7	96.9	75.9	100.0	100.0	93.9	100.0	100.0	80.2	100.0	100.0
36	108	80.7	100.0	100.0	94.8	100.0	100.0	100.0	100.0	100.0	100.0	100.0	100.0
42		71.6	89.5	100.0	84.1	100.0	100.0	100.0	100.0	100.0	88.9	100.0	100.0
48		64.9	81.1	97.3	76.2	100.0	100.0	94.3	100.0	100.0	80.6	100.0	100.0
36	114	75.7	94.6	100.0	88.9	100.0	100.0	100.0	100.0	100.0	94.0	100.0	100.0
42		66.9	83.7	100.0	78.7	100.0	100.0	97.3	100.0	100.0	83.2	100.0	100.0
48		60.5	75.7	90.8	71.1	100.0	100.0	88.0	100.0	100.0	75.2	100.0	100.0
36	120	71.2	89.0	100.0	83.7	100.0	100.0	100.0	100.0	100.0	88.5	100.0	100.0
42		62.9	78.6	94.3	73.9	100.0	100.0	91.4	100.0	100.0	78.1	100.0	100.0
48		56.8	70.9	85.1	66.7	100.0	100.0	82.5	100.0	100.0	70.5	94.0	100.0

NOTE:
GLASS CAPACITIES ON THIS SHEET ARE BASED ON ASTM E1300-02/04 (3 SEC. GUSTS) AND FLORIDA BUILDING COMMISSION DECLARATORY STATEMENT DCA05-DEC-219

$$\text{PANEL WIDTH NOMINAL} = \frac{\text{DOOR WIDTH}}{\text{NUMBER OF PANELS}}$$

D.L. OPENING
D.L.O. HEIGHT = PANEL HEIGHT – 5.1875"
D.L.O. WIDTH FIX. PANEL = PANEL WIDTH – 5.250"
D.L.O. WIDTH MOV. PANEL = PANEL WIDTH – 6.375"

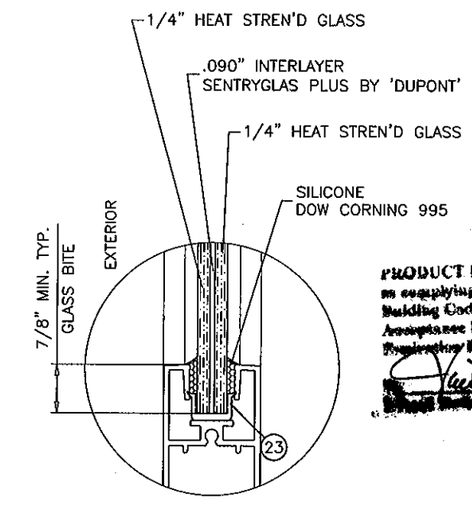

9/16" OVERALL LAMINATED GLASS
GLAZING DETAIL

PRODUCT REVISED
in complying with the Florida Building Code
Acceptance No. 12-0416.02
Registration Date 4/3/18

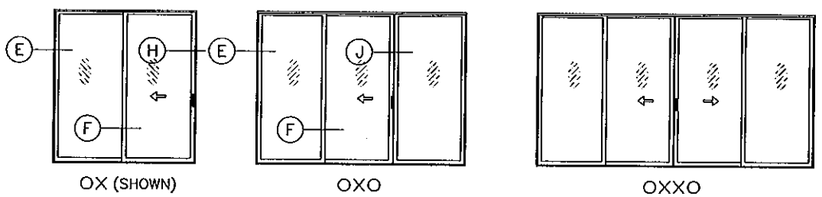

OX (SHOWN)
XO

OXO

OXXO

APPROVED CONFIGURATIONS

YIPING WANG
YIPING WANG, P.E.
FLORIDA REGISTRATION
PE #55983
C.A.N: 28677
STATE OF FLORIDA
PROFESSIONAL ENGINEER

MAR 08 2012

REVISIONS	
NO. DATE	DESCRIPTION

MCY ENGINEERING, INC.
GLAZING CONSULTANTS
8501 SW 124 AVE. STE. 205A
MIAMI, FL 33183
P: 305.271.0117
F: 786.573.5063
www.MCYEngineering.com
MCY.Engineering@Att.net

NRAP SERIES 6001 SLIDING GLASS DOOR (L.M.I.)

NR ARCHITECTURAL PRODUCTS INC.
4348 WESTROADS DRIVE
WEST PALM BEACH, FL 33407
P: (561) 844 - 1121 F: (561) 844 - 6131

DATE	02-20-12
SCALE	AS NOTED
DRAWN	S.L.
PROJECT	12-026

DRAWING NO.
AD12-03

SHEET 2 of 7

DESIGN LOAD CAPACITY – PSF

PANEL WIDTH NOMINAL INCHES	DOOR HEIGHT INCHES	ANCHORS TYPE 'A'			ANCHORS TYPE 'B'			ANCHORS TYPE 'C'			ANCHORS TYPE 'D'		
		4 ANCHORS	5 ANCHORS	6 ANCHORS	2 ANCHORS	3 ANCHORS	4 ANCHORS	2 ANCHORS	3 ANCHORS	4 ANCHORS	3 ANCHORS	4 ANCHORS	5 ANCHORS
		EXT. (+) INT. (–)	EXT. (+) INT. (–)	EXT. (+) INT. (–)	EXT. (+) INT. (–)	EXT. (+) INT. (–)	EXT. (+) INT. (–)	EXT. (+) INT. (–)	EXT. (+) INT. (–)	EXT. (+) INT. (–)	EXT. (+) INT. (–)	EXT. (+) INT. (–)	EXT. (+) INT. (–)
36	80	100.0	100.0	100.0	100.0	100.0	100.0	100.0	100.0	100.0	100.0	100.0	100.0
42		100.0	100.0	100.0	100.0	100.0	100.0	100.0	100.0	100.0	100.0	100.0	100.0
48		97.3	100.0	100.0	100.0	100.0	100.0	100.0	100.0	100.0	100.0	100.0	100.0
54		91.4	100.0	100.0	100.0	100.0	100.0	100.0	100.0	100.0	100.0	100.0	100.0
60		87.2	100.0	100.0	100.0	100.0	100.0	100.0	100.0	100.0	100.0	100.0	100.0
36	84	100.0	100.0	100.0	100.0	100.0	100.0	100.0	100.0	100.0	100.0	100.0	100.0
42		98.8	100.0	100.0	100.0	100.0	100.0	100.0	100.0	100.0	100.0	100.0	100.0
48		90.8	100.0	100.0	100.0	100.0	100.0	100.0	100.0	100.0	100.0	100.0	100.0
54		85.0	100.0	100.0	99.8	100.0	100.0	100.0	100.0	100.0	100.0	100.0	100.0
60		80.7	100.0	100.0	94.8	100.0	100.0	100.0	100.0	100.0	100.0	100.0	100.0
36	90	100.0	100.0	100.0	100.0	100.0	100.0	100.0	100.0	100.0	100.0	100.0	100.0
42		90.2	100.0	100.0	100.0	100.0	100.0	100.0	100.0	100.0	100.0	100.0	100.0
48		82.5	100.0	100.0	97.0	100.0	100.0	100.0	100.0	100.0	100.0	100.0	100.0
54		76.9	96.1	100.0	90.3	100.0	100.0	100.0	100.0	100.0	95.5	100.0	100.0
60		72.6	90.8	100.0	85.4	100.0	100.0	100.0	100.0	100.0	90.2	100.0	100.0
36	96	93.1	100.0	100.0	100.0	100.0	100.0	100.0	100.0	100.0	100.0	100.0	100.0
42		83.0	100.0	100.0	97.6	100.0	100.0	100.0	100.0	100.0	100.0	100.0	100.0
48		75.7	94.6	100.0	88.9	100.0	100.0	100.0	100.0	100.0	94.0	100.0	100.0
54		70.2	87.7	100.0	82.5	100.0	100.0	100.0	100.0	100.0	87.2	100.0	100.0
60		66.0	82.5	99.1	77.6	100.0	100.0	96.0	100.0	100.0	82.0	100.0	100.0
36	102	86.5	100.0	100.0	100.0	100.0	100.0	100.0	100.0	100.0	100.0	100.0	100.0
42		76.9	96.1	100.0	90.3	100.0	100.0	100.0	100.0	100.0	95.5	100.0	100.0
48		69.8	87.3	100.0	82.1	100.0	100.0	100.0	100.0	100.0	86.8	100.0	100.0
54		64.6	80.7	96.9	75.9	100.0	100.0	93.9	100.0	100.0	80.2	100.0	100.0
36	108	80.7	100.0	100.0	94.8	100.0	100.0	100.0	100.0	100.0	100.0	100.0	100.0
42		71.6	89.5	100.0	84.1	100.0	100.0	100.0	100.0	100.0	88.9	100.0	100.0
48		64.9	81.1	97.3	76.2	100.0	100.0	94.3	100.0	100.0	80.6	100.0	100.0
36	114	75.7	94.6	100.0	88.9	100.0	100.0	100.0	100.0	100.0	94.0	100.0	100.0
42		66.9	83.7	100.0	78.7	100.0	100.0	97.3	100.0	100.0	83.2	100.0	100.0
48		60.5	75.7	90.8	71.1	100.0	100.0	88.0	100.0	100.0	75.2	100.0	100.0
36	120	71.2	89.0	100.0	83.7	100.0	100.0	100.0	100.0	100.0	88.5	100.0	100.0
42		62.9	78.6	94.3	73.9	100.0	100.0	91.4	100.0	100.0	78.1	100.0	100.0
48		56.8	70.9	85.1	66.7	100.0	100.0	82.5	100.0	100.0	70.5	94.0	100.0

NOTE:
GLASS CAPACITIES ON THIS SHEET ARE BASED ON ASTM E1300-02/04 (3 SEC. GUSTS) AND FLORIDA BUILDING COMMISSION DECLARATORY STATEMENT DCA05-DEC-219

$$\text{PANEL WIDTH NOMINAL} = \frac{\text{DOOR WIDTH}}{\text{NUMBER OF PANELS}}$$

D.L. OPENING
D.L.O. HEIGHT = PANEL HEIGHT – 5.1875"
D.L.O. WIDTH FIX. PANEL = PANEL WIDTH – 5.250"
D.L.O. WIDTH MOV. PANEL = PANEL WIDTH – 6.375"

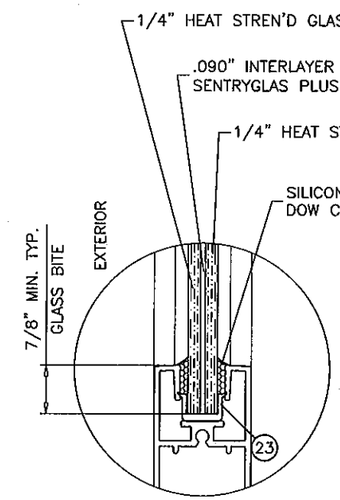

9/16" OVERALL LAMINATED GLASS
GLAZING DETAIL

PRODUCT REVISED
as complying with the Florida Building Code
Acceptance No. 12-0416.02
Expiration Date 4/3/18
Miami Dade Product Control

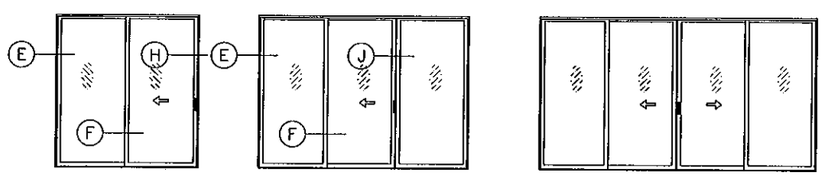

OX (SHOWN)
XO

OXO

OXXO

APPROVED CONFIGURATIONS

TWO TRACK FRAME DOOR CONFIGURATIONS OF MORE THAN FOUR PANELS USING STILE COMBINATIONS SHOWN IN THESE DETAILS MAY ALSO BE APPROVED.

YIPING WANG
YIPING WANG, P.E.
FLORIDA REGISTRATION
NO. #55983
C.A.N. 28677
STATE OF FLORIDA
PROFESSIONAL ENGINEER
MAR 0 8 2012

REVISIONS	
NO.	DATE	DESCRIPTION

MCY ENGINEERING, INC.
GLAZING CONSULTANTS
8501 SW 124 AVE. STE. 205A
MIAMI, FL 33183
P: 305.271.0117
F: 786.573.5063
www.MCYEngineering.com
MCY.Engineering@Att.net

NRAP SERIES 6001 SLIDING GLASS DOOR (L.M.I.)

NR ARCHITECTURAL PRODUCTS INC.
4348 WESTROADS DRIVE
WEST PALM BEACH, FL 33407
P: (561) 844 - 1121 F: (561) 844 - 6131

DATE	02-20-12
SCALE	AS NOTED
DRAWN	S.L.
PROJECT	12-026

DRAWING NO.
AD12-03

SHEET 2 of 7

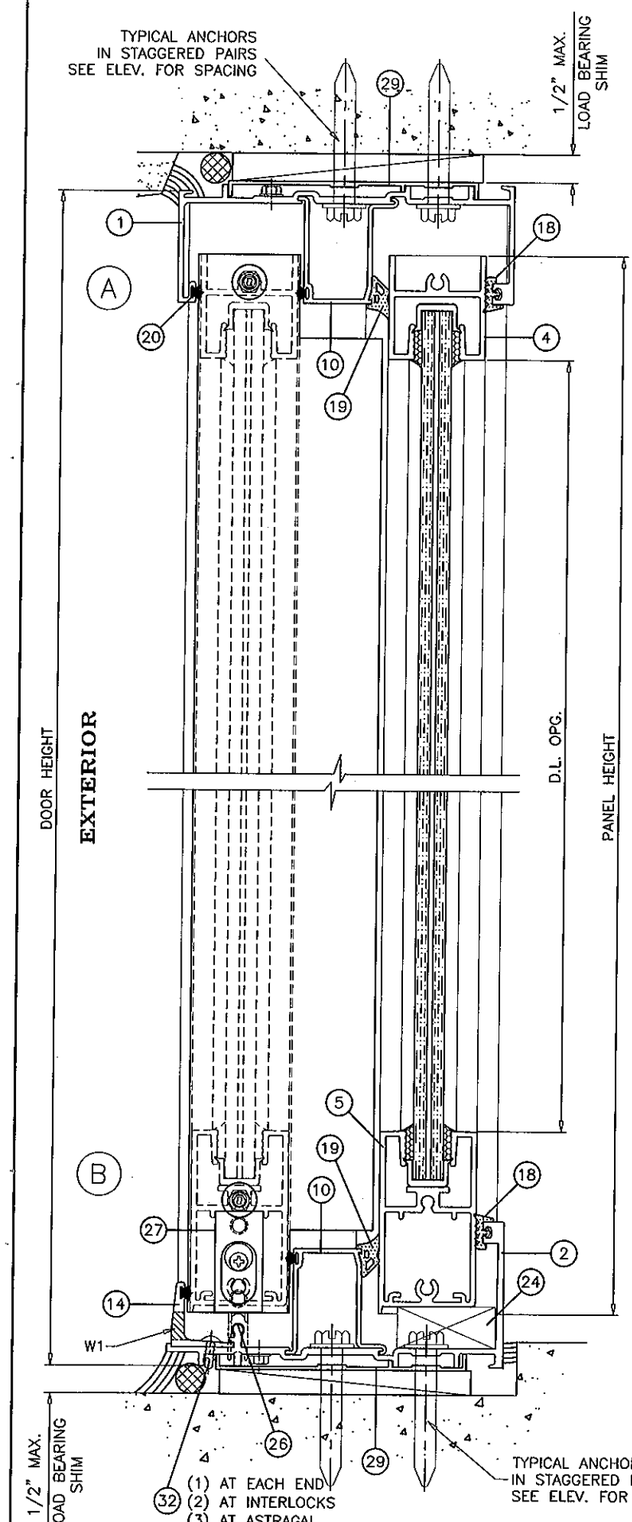

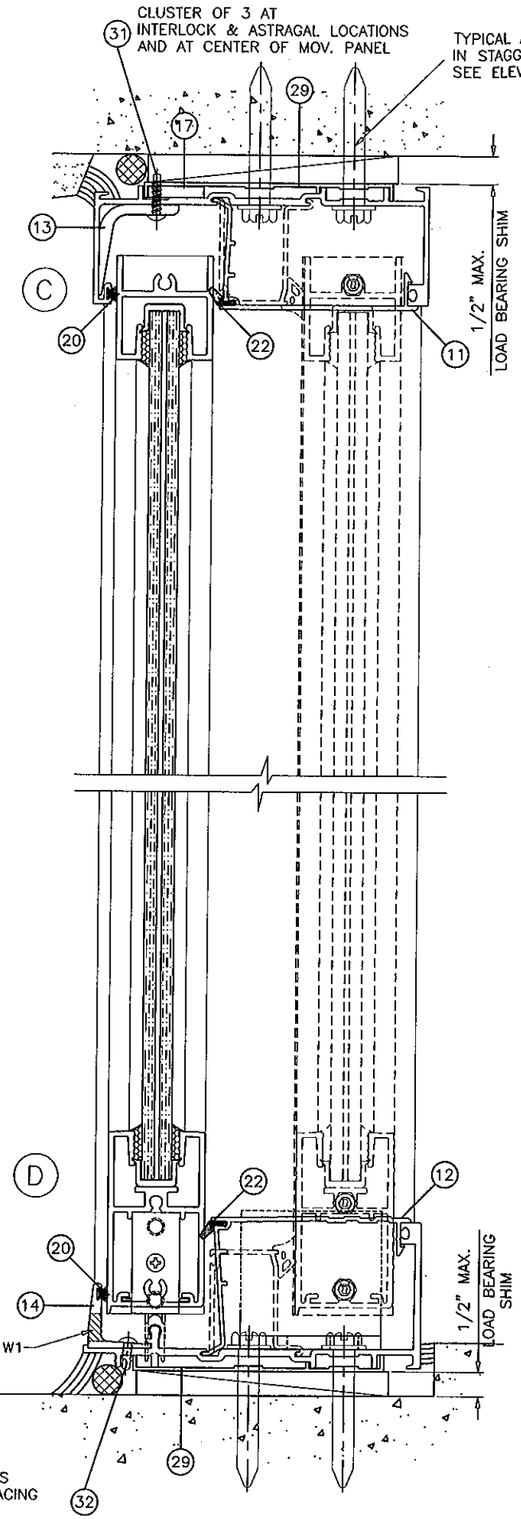

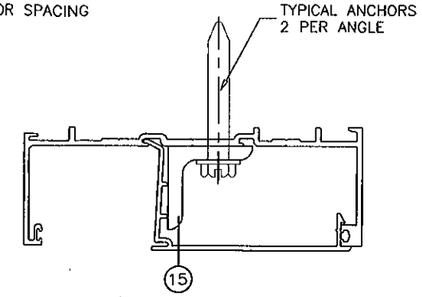

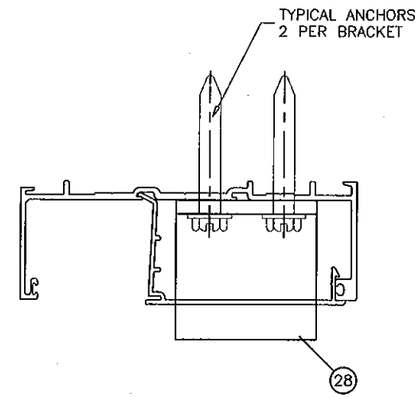

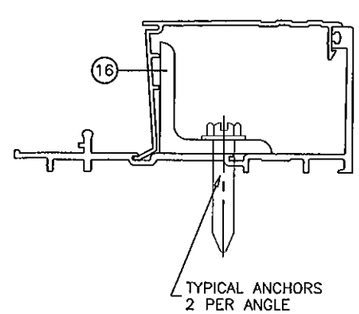

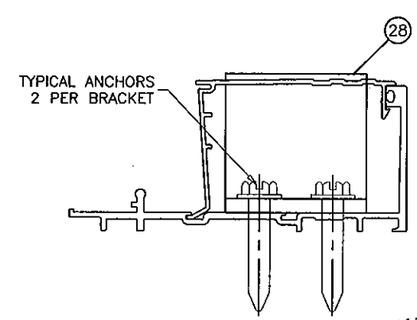

PRODUCT REVISED
in complying with the Florida
Building Code
Acceptance No 12-0416.02
Expiration Date 4/3/18
By
Miami Dade Product Control

REVISIONS		
NO	DATE	DESCRIPTION

MCY ENGINEERING, INC.
GLAZING CONSULTANTS
8501 SW 124 AVE. STE. 205A
MIAMI, FL 33183
P: 305.271.0117
F: 786.573.5063
www.MCYEngineering.com
MCY.Engineering@Att.net

NRAP SERIES 6001 SLIDING GLASS DOOR (L.M.I.)

NR ARCHITECTURAL PRODUCTS INC.
4348 WESTROADS DRIVE
WEST PALM BEACH, FL 33407
P: (561) 844 - 1121 F: (561) 844 - 6131

YIPING WANG
YIPING WANG, P.E.
FLORIDA REGISTRATION
NO. 59833
C.A.N. 28677
STATE OF FLORIDA
PROFESSIONAL ENGINEER

MAR 08 2012

DATE	02-20-12
SCALE	AS NOTED
DRAWN	S.L.
PROJECT	12-026

DRAWING NO.
AD12-03

SHEET 3 of 7

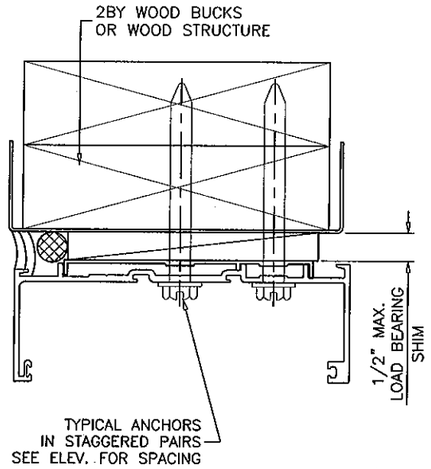

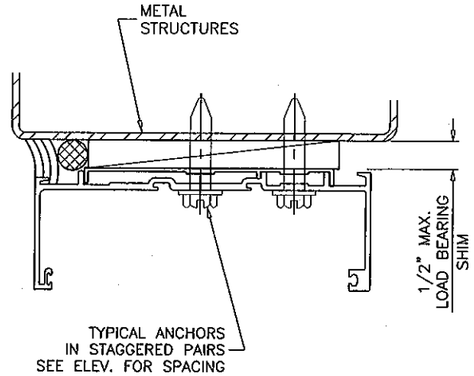

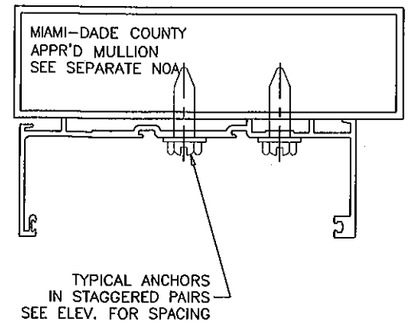

WOOD BUCKS AND METAL STRUCTURES NOT BY N.R. WDW. MUST SUPPORT LOADS IMPOSED BY GLAZING SYSTEM AND TRANSFER THEM TO THE BUILDING STRUCTURE.

TYPICAL ANCHORS: SEE ELEV. FOR SPACING

TYPE 'A'– 3/8" DIA. LAG SCREWS (Fy = 45 KSI)

INTO WOOD STRUCTURES
WITH 2–1/4" MIN. PENETRATION INTO WOOD

TYPE 'B'– 3/8" DIA. POWERS WEDGE–BOLT ANCHOR

DIRECTLY INTO CONCRETE (fc' = 3000 PSI MIN.)
WITH 1–1/2" MIN. EMBED INTO CONC.

TYPE 'C'– 3/8" DIA. SCREWS GRADE 5

INTO METAL STRUCTURES

STEEL : 1/4" THK. MIN. (Fy = 36 KSI MIN.)
ALUMINUM : 1/4" THK. MIN. (6063–T5 MIN.)
(STEEL IN CONTACT WITH ALUMINUM TO BE PLATED OR PAINTED)

TYPE 'D'– 5/16" DIA. TAPCON BY 'ITW' (Fu = 120 KSI, Fy = 92 KSI)

INTO WOOD STRUCTURES
WITH 2–1/4" MIN. PENETRATION INTO WOOD

ANCHOR EDGE DISTANCES

INTO CONCRETE AND MASONRY = 3" MIN.
INTO WOOD STRUCTURE = 1–1/2" MIN.
INTO METAL STRUCTURE = 1" MIN.

SEALANTS:

ALL FRAME CORNERS AND JOINTS SEALED WITH
DOW–795 OR TREMCO SPECTREM 2 SILICONE SEALANT.

WEEPHOLES:

W1 = 1–1/2" X 1/2" WEEP SLOTS
(1) AT CENTER OF EACH PANEL
(1) AT EACH SIDE OF INTERLOCK
(1) AT ASTRAGAL STILE

PRODUCT REVIEWED
as complying with the Florida
Building Code
Acceptance No. 12-0416.02
Expiration Date 4/3/18
Miami-Dade Product Control

YIPING WANG
YIPING WANG, P.E.
FLORIDA REGISTRATION
RE. #52983
C.A.N. 28677
STATE OF FLORIDA
PROFESSIONAL ENGINEER

MAR 08 2012

REVISIONS		
NO.	DATE	DESCRIPTION

MCY ENGINEERING, INC.
GLAZING CONSULTANTS
8501 SW 124 AVE. STE. 205A
MIAMI, FL 33183
P: 305.271.0117
F: 786.573.5063
www.MCYEngineering.com
MCY.Engineering@Att.net

NRAP SERIES 6001 SLIDING GLASS DOOR (L.M.I.)

NR ARCHITECTURAL PRODUCTS INC.
4348 WESTROADS DRIVE
WEST PALM BEACH, FL 33407
P: (561) 844 - 1121 F: (561) 844 - 6131

DATE	02-20-12
SCALE	AS NOTED
DRAWN	S.L.
PROJECT	12-026

DRAWING NO.
AD12--03

SHEET 4 of 7

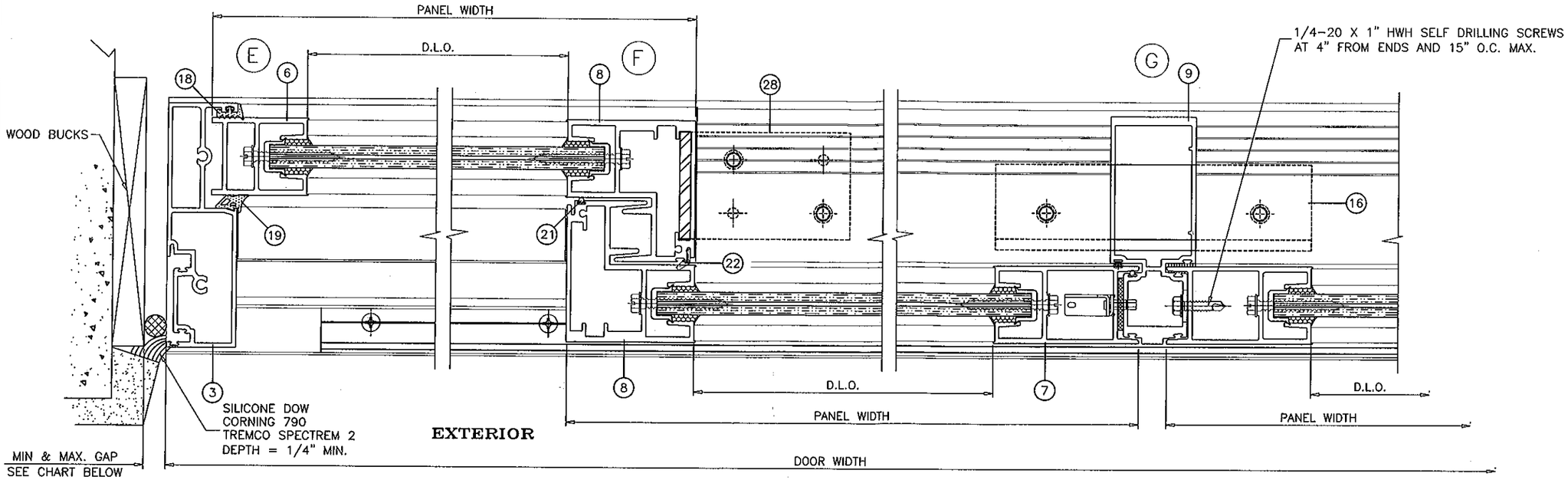

MAX. FRAME HEIGHT	GAP	
	MIN.	MAX.
114"	3/8"	1/2"
119 5/8"	1/2"	3/4"

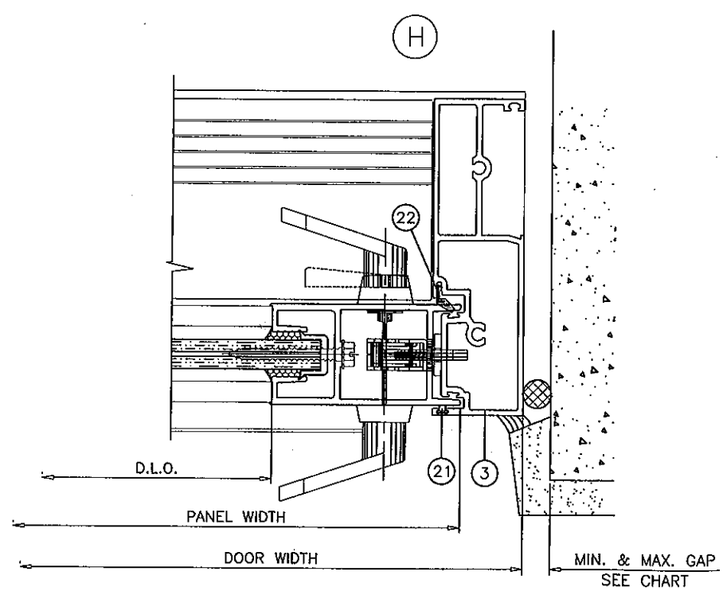

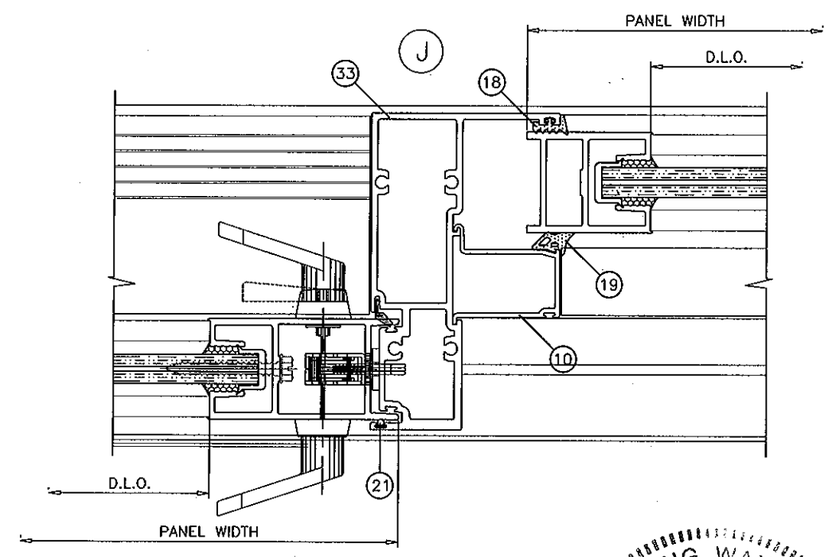

PRODUCT REVISED
as complying with the Florida Building Code
Acceptance No 12-0416.02
Expiration Date 4/3/18
By
Miami-Dade Product Control

MAR 08 2012

YIPING WANG
LICENSED
YIPING WANG, P.E.
FLORIDA REGISTRATION
No. 50983
C.A.N. 28677
STATE OF FLORIDA
PROFESSIONAL ENGINEER

REVISIONS		
NO.	DATE	DESCRIPTION

MCY ENGINEERING, INC.
GLAZING CONSULTANTS
8501 SW 124 AVE. STE. 205A
MIAMI, FL. 33183
P: 305.271.0117
F: 786.573.5063
www.MCYEngineering.com
MCY.Engineering@Att.net

NRAP SERIES 6001 SLIDING GLASS DOOR (L.M.I.)

NR ARCHITECTURAL PRODUCTS INC.
4348 WESTROADS DRIVE
WEST PALM BEACH, FL. 33407
P: (561) 844 - 1121 F: (561) 844 - 6131

DATE	02-20-12
SCALE	AS NOTED
DRAWN	S.I.
PROJECT	12-026

DRAWING NO.
AD12-03

SHEET 5 of 7

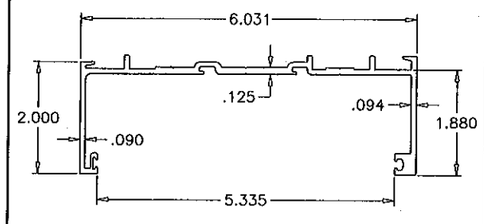

1 FRAME HEAD

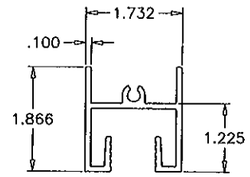

4 PANEL TOP RAIL

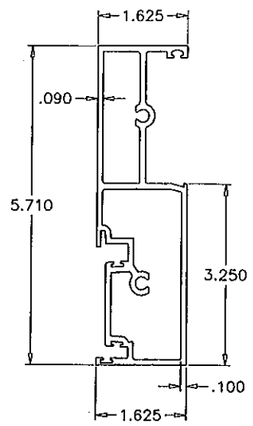

3 FRAME JAMB

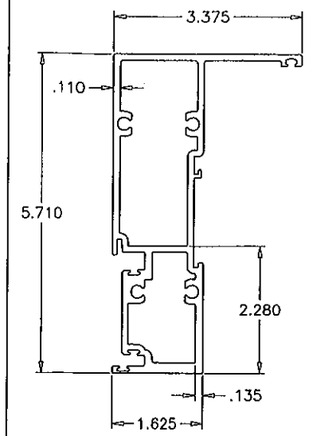

33 OXO LOCK STILE

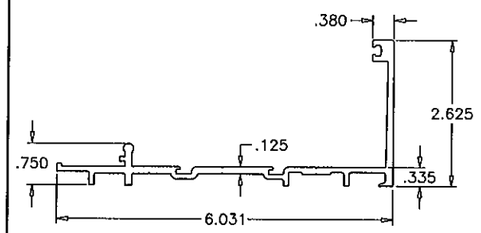

2 FRAME SILL

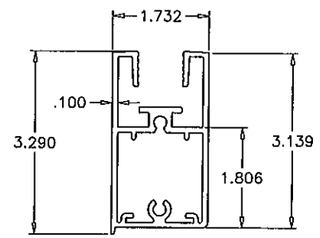

5 PANEL BOTTOM RAIL

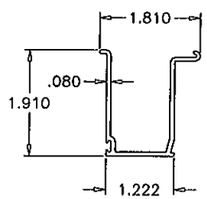

10 FIX. PANEL STOP

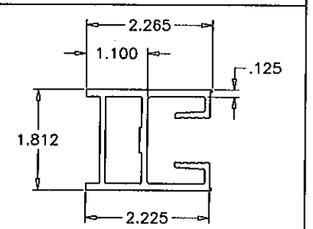

6 FIX. PANEL JAMB STILE

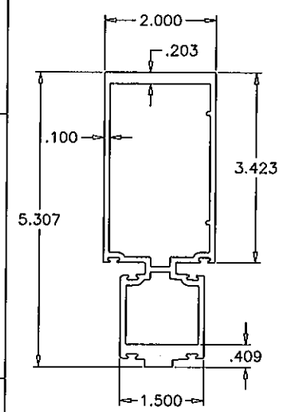

9 ASTRAGAL

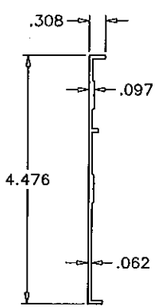

29 SHEAR CLIP

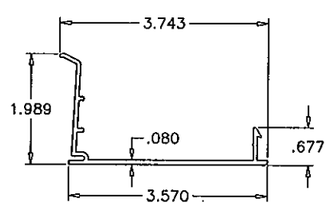

11 HEAD TRIM

7 OPERATING PANEL JAMB STILE

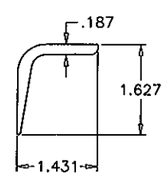

13 HEAD ANTI-BLOWOUT CLIP

15 HEAD ANGLE

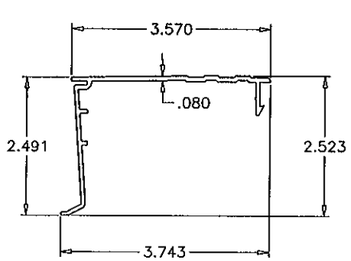

12 SILL THRESHOLD TRIM

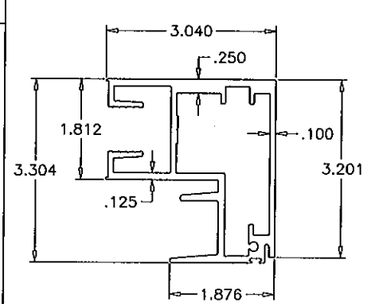

8 INTERLOCK STILE

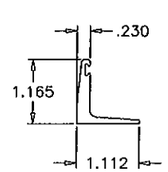

14 SILL ANTI-BLOWOUT CLIP

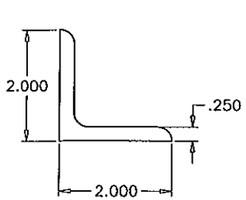

16 SILL ANGLE

PRODUCT REVISED
as complying with the Florida Building Code
Acceptance No 12-0416.02
Expiration Date 4/13/18
By
Miami Dade Product Control

YIPING WANG
YIPING WANG, P.E.
FLORIDA REGISTRATION
NO. PE #55983
C.A. NO. 28079
STATE OF FLORIDA
PROFESSIONAL ENGINEER

MAR 08 2012

REVISIONS		
NO.	DATE	DESCRIPTION

MCY ENGINEERING, INC.
GLAZING CONSULTANTS
8501 SW 124 AVE. STE. 205A
MIAMI, FL 33183
P: 305.271.0117
F: 786.573.5063
www.MCYEngineering.com
MCY.Engineering@Att.net

NRAP SERIES 6001 SLIDING GLASS DOOR (L.M.I.)

NR ARCHITECTURAL PRODUCTS INC.
4348 WESTROADS DRIVE
WEST PALM BEACH, FL 33407
P: (561) 844 - 1121 F: (561) 844 - 6131

DATE	02-20-12
SCALE	AS NOTED
DRAWN	S.L.
PROJECT	12-026

DRAWING NO.
AD12-03

SHEET 6 of 7

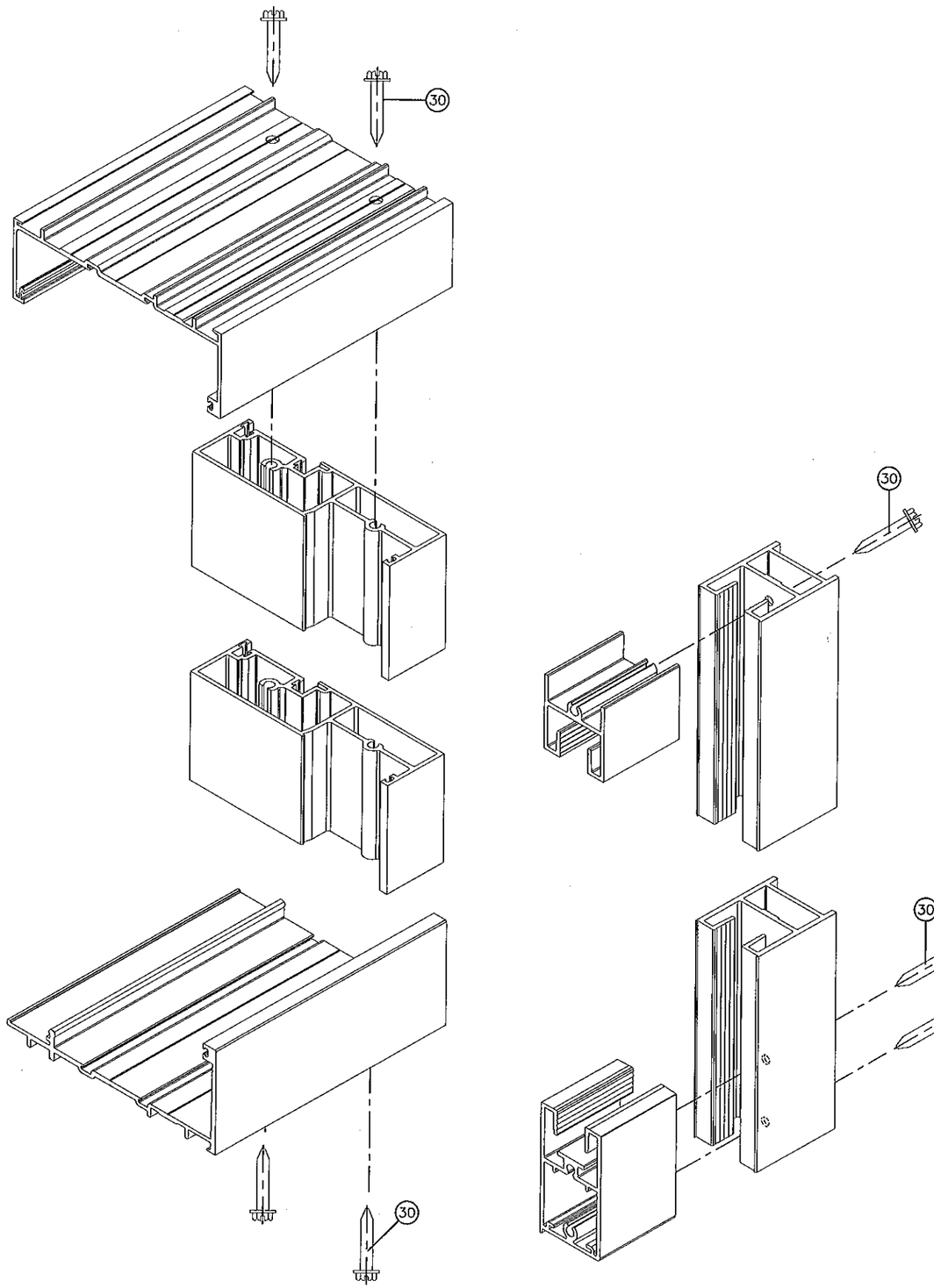

ITEM #	PART #	QUANTITY	DESCRIPTION	MATERIAL	MANF./SUPPLIER/REMARKS
1	SD-001	1	FRAME HEAD	6005-T5	–
2	SD-002	1	FRAME SILL	6005-T5	–
3	SD-003	1	FRAME JAMB	6005-T5	–
4	SD-006	2/ PANEL	TOP RAIL	6005-T5	–
5	SD-007	2/ PANEL	BOTTOM RAIL	6005-T5	–
6	SD-008	AS REQD.	FIX. PANEL JAMB STILE	6005-T5	–
7	SD-010	AS REQD.	OPERATING PANEL JAMB STILE	6005-T5	–
8	SD-009	AS REQD.	INTERLOCK STILE	6005-T5	–
9	SD-005	AS REQD.	ASTRAGAL STILE	6005-T5	–
10	SD-011	AS REQD.	FIX. PANEL STOP	6005-T5	–
11	SD-013	–	HEAD TRIM	6005-T5	–
12	SD-012	–	SILL THRESHOLD TRIM	6005-T5	–
13	SD-014	1	HEAD ANTI-BLOWOUT CLIP	6005-T5	AT MOV. PANELS ONLY
14	SD-015	1	SILL ANTI-BLOWOUT CLIP	6005-T5	LENGTH = FRAME WIDTH - 9"
15	NR-A1	–	HEAD REINF. ANGLE	STEEL	7-3/8" LONG
16	NR-A2	–	SILL REINF. ANGLE	STEEL	7-3/8" LONG
17	NR-A3	–	BACK UP PLATE	ALUM	1 X 4 X 1/4"
18	NR-G8	AS REQD.	PRESET GASKET	EPDM SPONGE	TR-15094E
19	NR-G9	AS REQD.	WEDGE GASKET	EPDM 70 DURO	TR-0436E
20	NR-G10	AS REQD.	FINPILE W'STRIPPING (.187W X .260H)	–	–
21	NR-G11	AS REQD.	BULB GASKET	VINYL	Q200T190 Q-LON
22	NR-G12	AS REQD.	FINGER GASKET	–	QEZD 250 Q-LON
23	NR-G14	AS REQD.	GLAZING GASKET (TRIMMED)	70 DURO	TR-15971W
24	NR-G15	AS REQD.	FIX. PANEL SETTING BLOCK	EPDM 80 DURO	4" LONG
25	NR-G16	AS REQD.	DOOR STOP	–	–
26	NR-A4	–	TRACK COVER	ST/ST	–
27	NR-A5	2/ MOV. PANEL	DUAL TANDEM ROLLER ASSEMBLY	ST/ST	DELTA
28	NR-A6	–	FIX. PANEL ANGLE BRACKET	ALUM	3 X 4 X 1/4" X 2-1/2" LONG
29	NR-A7	AS REQD.	SHEAR CLIP CONTINUOS	6005-T5	–
30	NR-F4	AS REQD.	FRAME/PANEL ASSEMBLY SCREWS	–	1/4-20 X 1-1/2" HWH TC
31	NR-F5	–	HEAD ANTI-BLOWOUT CLIP FASTENERS	–	1/4-20 X 3/4" HWH MS
32	NR-F6	–	SILL ANTI-BLOWOUT CLIP FASTENERS	–	#12 X 1/4" X 1/2" PHP SMS
33	SD-004	AS REQD.	OXO PANEL LOCK STILE	6005-T5	–
34	–	AS REQD.	MULTI POINT LOCK	ST. STEEL	AMESBURY

PRODUCT REVIEWED
as complying with the Florida Building Code
Acceptance No 12-0416.02
Expiration Date 4/3/18
By
Miami-Dade Product Control

YIPING WANG
YIPING WANG, P.E.
FLORIDA REGISTRATION
No. PE-56983
C.A.N. 28677
STATE OF FLORIDA
PROFESSIONAL ENGINEER

MAR 08 2012

REVISIONS	
NO. DATE	DESCRIPTION

MCY ENGINEERING, INC.
GLAZING CONSULTANTS
8501 SW 124 AVE. STE. 205A
MIAMI, FL 33183
P: 305.271.0117
F: 786.573.5063
www.MCYEngineering.com
MCY.Engineering@Att.net

NRAP SERIES 6001 SLIDING GLASS DOOR (L.M.I.)

NR ARCHITECTURAL PRODUCTS INC.
4348 WESTROADS DRIVE
WEST PALM BEACH, FL. 33407
P: (561) 844 - 1121 F: (561) 844 - 6131

DATE	02-20-12
SCALE	AS NOTED
DRAWN	S.L.
PROJECT	12-026

DRAWING NO.
AD12-03

SHEET 7 of 7