MIAMI-DADE COUNTY
DEPARTMENT OF PERMITTING, ENVIRONMENT, AND REGULATORY AFFAIRS (PERA)
BOARD AND CODE ADMINISTRATION DIVISION

MIAMI-DADE COUNTY
PRODUCT CONTROL SECTION
11805 SW 26 Street, Room 208
Miami, Florida 33175-2474
T (786) 315-2590 F (786) 315-2599
www.miamidade.gov/pera/

NOTICE OF ACCEPTANCE (NOA)

CGI Windows & Doors
10100 N.W. 25th Street
Miami, FL. 33172

SCOPE:

This NOA is being issued under the applicable rules and regulations governing the use of construction materials. The documentation submitted has been reviewed and accepted by Miami-Dade County PERA -Product Control Section to be used in Miami Dade County and other areas where allowed by the Authority Having Jurisdiction (AHJ).

This NOA shall not be valid after the expiration date stated below. The Miami-Dade County Product Control Section (In Miami Dade County) and/or the AHJ (in areas other than Miami Dade County) reserve the right to have this product or material tested for quality assurance purposes. If this product or material fails to perform in the accepted manner, the manufacturer will incur the expense of such testing and the AHJ may immediately revoke, modify, or suspend the use of such product or material within their jurisdiction. PERA reserves the right to revoke this acceptance, if it is determined by Miami-Dade County Product Control Section that this product or material fails to meet the requirements of the applicable building code.

This product is approved as described herein, and has been designed to comply with the Florida Building Code, including the High Velocity Hurricane Zone.

DESCRIPTION: Series "560" Aluminum Sliding Glass Door (3–Track) w/ wo Reinforcements – L.M.I.

APPROVAL DOCUMENT: Drawing No. **W09–58**, titled "Series 560 Alum Sliding Glass Door – LMI", sheets 1 through 13 of 13, prepared by Al–Farooq Corp., dated 11/10/09, with revision A dated 03/23/12, signed and sealed by Javad Ahmad, P.E., bearing the Miami-Dade County Product Control Revision stamp with the Notice of Acceptance number and expiration date by the Miami-Dade County Product Control Section.

MISSILE IMPACT RATING: Large and Small Missile Impact Resistant

LABELING: Each unit shall bear a permanent label with the manufacturer's name or logo, city, state and series and following statement: "Miami-Dade County Product Control Approved", noted herein.

RENEWAL of this NOA shall be considered after a renewal application has been filed and there has been no change in the applicable building code negatively affecting the performance of this product.

TERMINATION of this NOA will occur after the expiration date or if there has been a revision or change in the materials, use, and/or manufacture of the product or process. Misuse of this NOA as an endorsement of any product, for sales, advertising or any other purposes shall automatically terminate this NOA. Failure to comply with any section of this NOA shall be cause for termination and removal of NOA.

ADVERTISEMENT: The NOA number preceded by the words Miami-Dade County, Florida, and followed by the expiration date may be displayed in advertising literature. If any portion of the NOA is displayed, then it shall be done in its entirety.

INSPECTION: A copy of this entire NOA shall be provided to the user by the manufacturer or its distributors and shall be available for inspection at the job site at the request of the Building Official.

This NOA **revises & renews NOA # 09-1209.07** and consists of this page 1 and evidence pages E-1 & E-2, as well as approval document mentioned above.

The submitted documentation was reviewed by **Jaime D. Gascon, P.E.**

MIAMI-DADE COUNTY APPROVED

J. Gascon 7/26/12

NOA No 12-0416.05
Expiration Date: June 12, 2017
Approval Date: August 2, 2012

NOTICE OF ACCEPTANCE: EVIDENCE SUBMITTED

A. DRAWINGS

1. Manufacturer's die drawings and sections (Submitted under previous file # **09-1209.07**)
2. Drawing No. **W09–58**, titled "Series 560 Alum Sliding Glass Door – LMI", sheets 1 through 13 of 13, prepared by Al–Farooq Corp., dated 11/10/09, with revision A dated 03/23/12, signed and sealed by Javad Ahmad, P.E.

B. TESTS

1. Test reports on: 1) Air Infiltration Test, per FBC, TAS 202–94
   2) Uniform Static Air Pressure Test, Loading per FBC, TAS 202–94
   3) Water Resistance Test, per FBC, TAS 202–94.
   4) Forced Entry Test, per FBC, TAS 202–94
   5) Small Missile Impact Test per FBC, TAS 201–94
   6) Large Missile Impact Test per FBC, TAS 201–94
   7) Cyclic Wind Pressure Loading per FBC, TAS 203–94

   Along with manufacturer's parts and section drawing marked–up drawings of aluminum SGD, by Hurricane Test Laboratory, Inc., Test Report No. **HTL–0080–0707–09**, dated November 10, 2009, signed and sealed by Vinu J. Abraham, P. E. (Submitted under previous file # **09-1209.07**)
2. Test reports on: 1) Air Infiltration Test, per FBC, TAS 202–94
   2) Uniform Static Air Pressure Test, Loading per FBC, TAS 202–94
   3) Water Resistance Test, per FBC, TAS 202–94.
   4) Forced Entry Test, per FBC, TAS 202–94
   5) Large Missile Impact Test per FBC, TAS 201–94
   6) Cyclic Wind Pressure Loading per FBC, TAS 203–94

   Along with manufacturer's parts and section drawing marked–up drawings of aluminum SGD, by Hurricane Engineering Testing, Inc., Test Report No.'s **HETI–07–4405, HETI–07–4409, HETI–07–4416, HETI–07–4418, HETI-07-4424, HETI-07-4425** and **HETI–07–4426**, dated December 27, 2007, signed and sealed by Candido F. Font, P. E. (Submitted under previous file # **08–0304.05**)

C. CALCULATIONS

1. Anchor verification calculations and structural analysis, complying with FBC-2010, prepared by Al Farooq Corporation, dated 2/28/12, signed and sealed by Javad Ahmad, P.E.
2. Glazing complies w/ ASTME-1300-04.

D. QUALITY ASSURANCE

1. Miami Dade Department of Permitting, Environment, and Regulatory Affairs (PERA).

E. MATERIAL CERTIFICATIONS

1. Notice of Acceptance No. **11-1102.09** issued to **Solutia, Inc.** for their "**Saflex CP - Saflex and Saflex HP Composites Glass Interlayer with PET Core**" dated 06/24/12, expiring on 12/11/13.
2. Notice of Acceptance No. **11-0624.02** issued to E.I. DuPont DeNemours & Co., Inc. for their "**DuPont Sentry Glass ® Interlayer**", expiring on 01/14/17.

Jaime D. Gascon, P.E.
Product Control Section Supervisor
NOA No 12-0416.05
Expiration Date: June 12, 2017
Approval Date: August 2, 2012

NOTICE OF ACCEPTANCE: EVIDENCE SUBMITTED

F. STATEMENTS

1. Statement letter of conformance to FBC 2010 and letter of no financial interest, prepared by Al Farooq Corporation, dated 03/15/12, signed and sealed by Javad Ahmad, P.E.
2. Laboratory compliance letters for Test Report No. **HTL–0080–0707–09**, issued by Hurricane Test Laboratory, Inc., dated November 10, 2009, signed and sealed by Vinu J. Abraham, P. E. (Submitted under previous file # **09-1209.07**)
3. Laboratory compliance letters for Test Reports No.'s **HETI–07–4405, HETI–07–4409, HETI–07–4416, HETI–07–4418, HETI-07-4424, HETI-07-4425** and **HETI–07–4426,** issued by Hurricane Engineering Testing, Inc., dated December 27, 2007, signed and sealed by Candido F. Font, P. E. (Submitted under previous file # **08–0304.05**)

G. OTHER

1. This NOA **revises & renews** NOA # **09-1209.07,** expired on 06/12/12.

Jaime D. Gascon, P.E.
Product Control Section Supervisor
NOA No 12-0416.05
Expiration Date: June 12, 2017
Approval Date: August 2, 2012

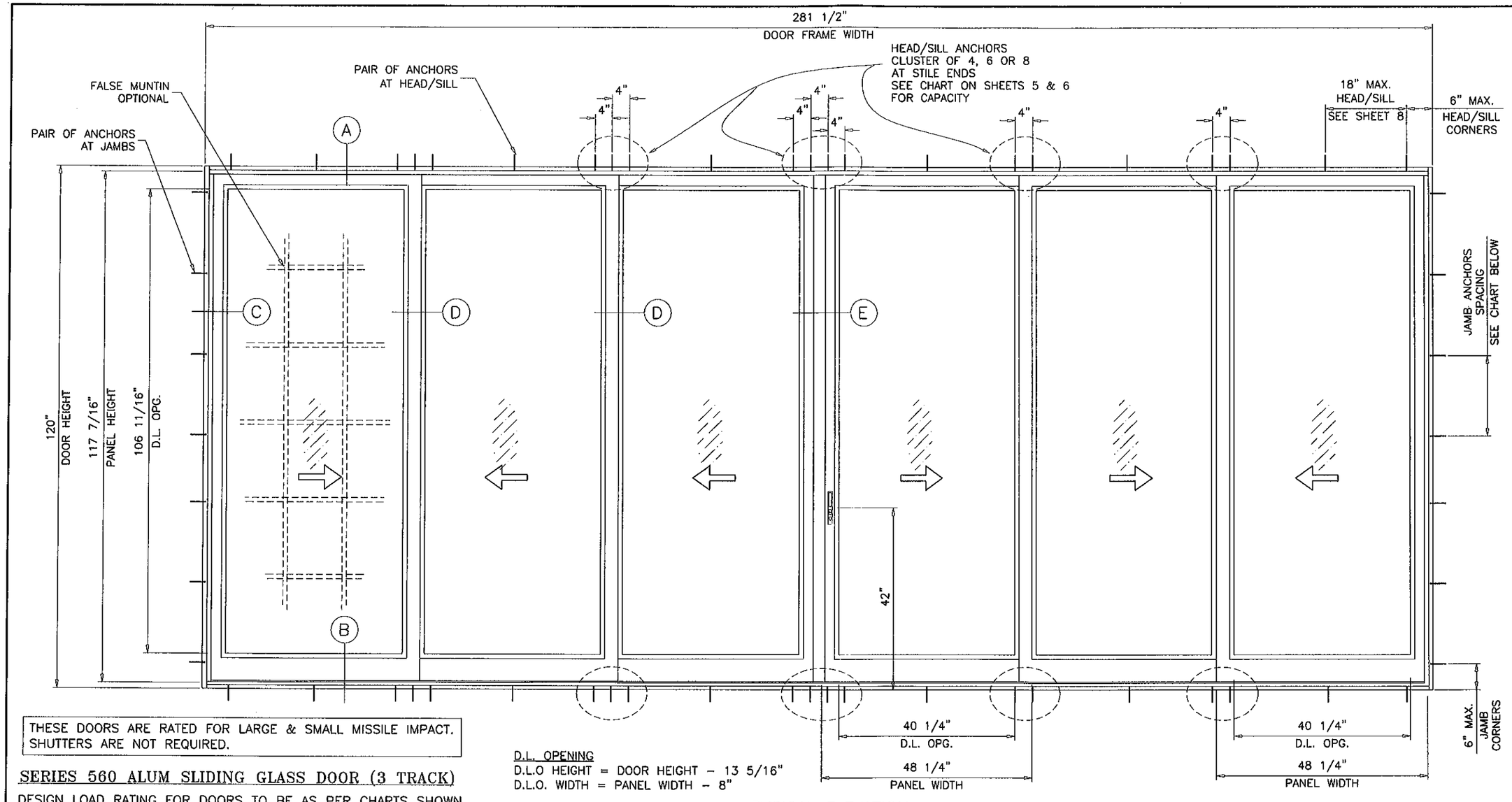

THESE DOORS ARE RATED FOR LARGE & SMALL MISSILE IMPACT. SHUTTERS ARE NOT REQUIRED.

SERIES 560 ALUM SLIDING GLASS DOOR (3 TRACK)

DESIGN LOAD RATING FOR DOORS TO BE AS PER CHARTS SHOWN ON SHEET 3.
APPLICABLE EGRESS REQUIREMENTS PER FBC TO BE REVIEWED BY BUILDING OFFICIAL.

THIS PRODUCT HAS BEEN DESIGNED AND TESTED TO COMPLY WITH THE REQUIREMENTS OF THE FLORIDA BUILDING CODE INCLUDING HIGH VELOCITY HURRICANE ZONE (HVHZ).

WOOD BUCKS BY OTHERS, MUST BE ANCHORED PROPERLY TO TRANSFER LOADS TO THE STRUCTURE.

ANCHORS SHALL BE AS LISTED, SPACED AS SHOWN ON DETAILS, ANCHORS EMBEDMENT TO BASE MATERIAL SHALL BE BEYOND WALL DRESSING OR STUCCO.

ANCHORING OR LOADING CONDITIONS NOT SHOWN IN THESE DETAILS ARE NOT PART OF THIS APPROVAL.

A LOAD DURATION INCREASE IS USED IN DESIGN OF ANCHORS INTO WOOD ONLY.

MATERIALS INCLUDING BUT NOT LIMITED TO STEEL/METAL SCREWS, THAT COME INTO CONTACT WITH OTHER DISSIMILAR MATERIALS SHALL MEET THE REQUIREMENTS OF THE FLORIDA BLDG. CODE SECTION 2003.8.4.

D.L. OPENING
D.L.O HEIGHT = DOOR HEIGHT – 13 5/16"
D.L.O. WIDTH = PANEL WIDTH – 8"

TYPICAL ELEVATION

INSTRUCTIONS:

USE CHARTS AS FOLLOWS.

STEP 1 DETERMINE DESIGN WIND LOAD REQUIREMENT BASED ON WIND VELOCITY, BLDG. HEIGHT, WIND ZONE USING APPLICABLE ASCE 7 STANDARD.

STEP 2 DETERMINE DOOR CAPACITY FROM TABLES ON SHEET 3 FOR THE GLASS TYPE AND REINFORCING TO USE.

STEP 3 USING CHARTS ON SHEET 5 & 6 SELECT ANCHOR OPTION WITH DESIGN RATING MORE THAN DESIGN LOAD SPECIFIED IN STEP 1 ABOVE.

STEP 4 (IF REQUIRED) FOR SIDE BY SIDE DOORS WITH VERTICAL MULLION CHECK TUBE CAPACITY FROM CHART ON SHEET 13. SELECT ANCHORS AS PER STEP 3.

STEP 5 THE LOWEST VALUE RESULTING FROM STEPS 2, 3 AND 4 SHALL APPLY TO ENTIRE SYSTEM.

MAX. JAMB ANCHOR SPACINGS			
	ANCHOR TYPE		
SHIM SPACE	'A' & 'B'	'C'	'D' & 'E'
1/4"	18-1/2"	18-1/2"	18-1/2"
3/8"	18-1/2"	–	18-1/2"
1/2"	9-1/4"	–	18-1/2"

LAMINATED GLASS AND
LAMINATED INSULATING GLASS
LARGE/SMALL MISSILE IMPACT

Engr: JAVAD AHMAD
CIVIL
FLA. PE # 70592
C.A.N. 3538

JUL 25 2012

PRODUCT REVISED
as complying with the Florida
Building Code
Acceptance No 12-0416.05
Expiration Date 6/12/2017
By
Miami Dade Product Control

AL-FAROOQ CORPORATION
ENGINEERS & PRODUCT DEVELOPMENT
1235 S.W. 87 AVE
MIAMI, FLORIDA 33174
TEL. (305) 264-8100 FAX. (305) 262-6978
COMP-ANL\W09-58CGI

SERIES-560 ALUM SLIDING GLASS DOOR (L.M.I.)

CGI WINDOWS & DOORS
10100 N.W. 25TH STREET
MIAMI, FL. 33172
TEL. (305) 593-6590 FAX. (305) 593-6592

revisions:			
no	date	by	description
A	03.23.12		UPDATED TO 2010 FBC

date: 11-10-09
scale: 1/2"=1'-0"
dr. by: HAMID
chk. by:

drawing no.
W09-58

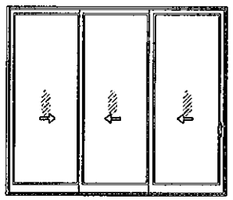

XXX (SHOWN)
OXX
XXO

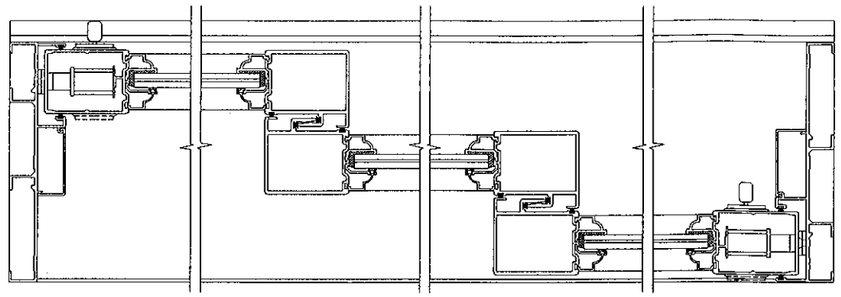

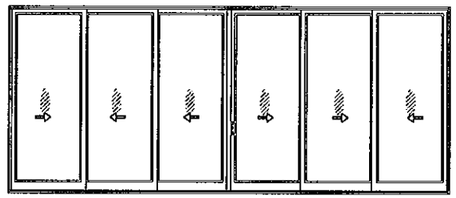

XXXXXX (SHOWN)
OXXXXO

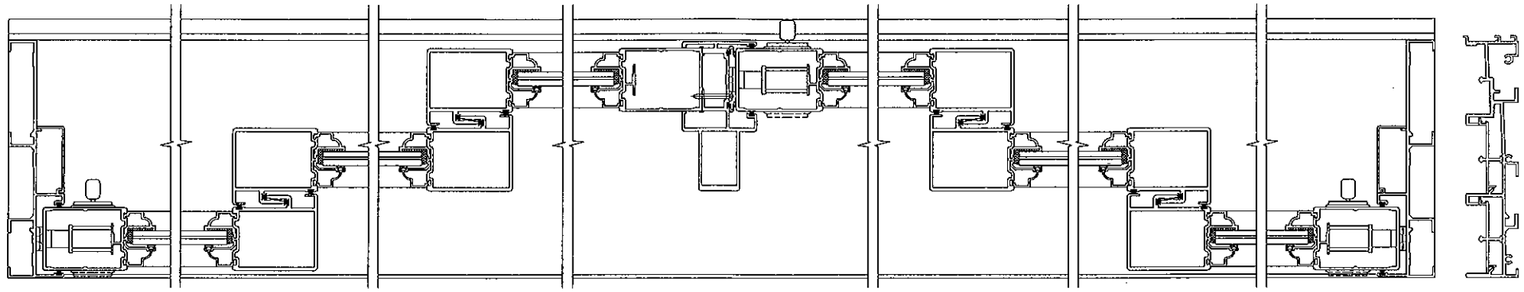

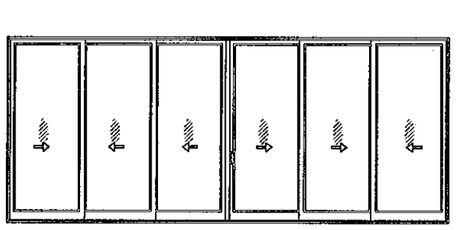

XXXXXX (SHOWN)
OXXXXO

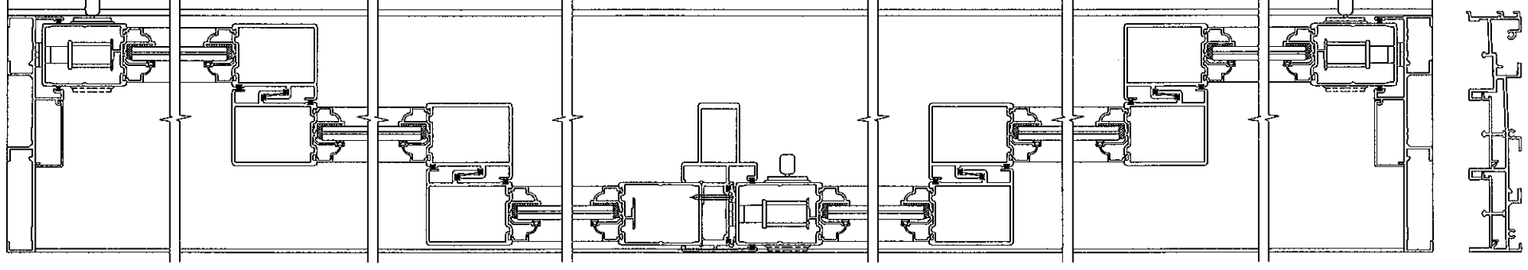

APPROVED CONFIGURATIONS
NON--POCKETED DOORS

Over-all Door Frame Width based on Panel Width

Panel Width	3 Panel Door Frame Width	6 Panel Door Frame Width
24 1/4"	69 1/4"	137 1/2"
30 1/4"	87 1/4"	173 1/2"
36 1/4"	105 1/4"	209 1/2"
42 1/4"	123 1/4"	245 1/2"
48 1/4"	141 1/4"	281 1/2"
54 1/4"	159 1/4"	317 1/2"
60 1/4"	177 1/4"	353 1/2"

MAXIMUM DOOR HEIGHT = 120"

Formula to convert Door Width to Panel Width

For 3 Panel Doors: (Door Width + 3 1/2")/3 = Panel Width
For 6 Panel Doors: (Door Width + 8")/6 = Panel Width

Formula to convert Panel Width to Door Width

For 3 Panel Doors: Panel Width x 3 - 3 1/2" = Door Width
For 6 Panel Doors: Panel Width x 6 - 8" = Door Width

Panel Height Formula

Door Height - 2 9/16" = Panel Height

D.L. OPENING
D.L.O HEIGHT = DOOR HEIGHT - 13 5/16"
D.L.O. WIDTH = PANEL WIDTH - 8"

Engr: JAVAD AHMAD
CIVIL
FLA. PE # 70592
C.A.N. 3538

JUL 25 2012

PRODUCT REVISED
as complying with the Florida Building Code
Acceptance No. 12-0411.05
Expiration Date 6/12/2017
Miami Dade Product Control

AL-FAROOQ CORPORATION
ENGINEERS & PRODUCT DEVELOPMENT
1235 S.W. 87 AVE
MIAMI, FLORIDA 33174
TEL. (305) 264-8100 FAX. (305) 262-6978
COMP-ANL\W09-58CGI

SERIES-560 ALUM SLIDING GLASS DOOR (L.M.I.)

CGI WINDOWS & DOORS
10100 N.W. 25TH STREET
MIAMI, FL. 33172
TEL. (305) 593-6590 FAX. (305) 593-6592

revisions:

no	date	by	description
A	03.23.12		NO CHANGE THIS SHEET

date: 11-10-09
scale: -
dr. by: HAMID
chk. by:

drawing no.
W09-58

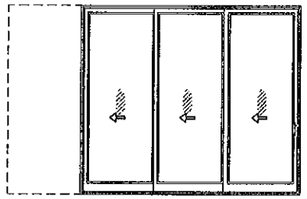

PXXX(SHOWN)
XXXP

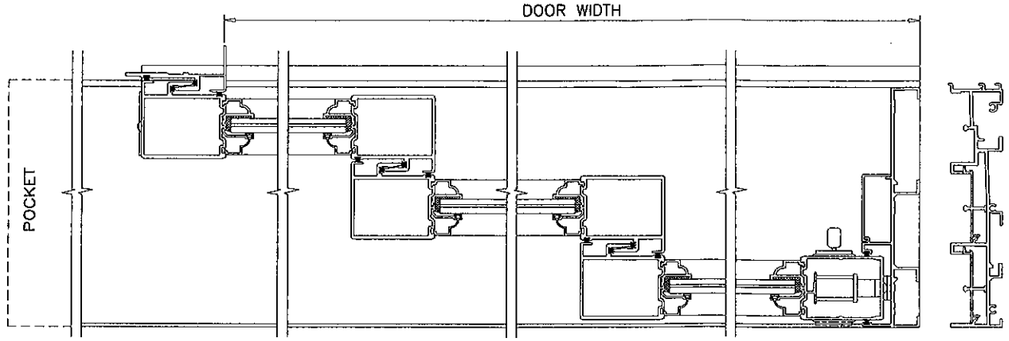

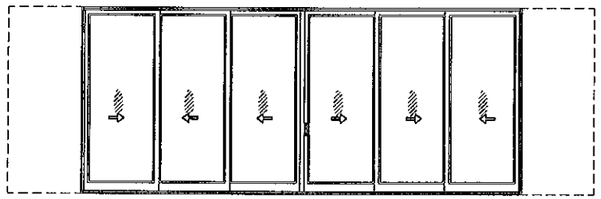

PXXXXXXP (SHOWN)

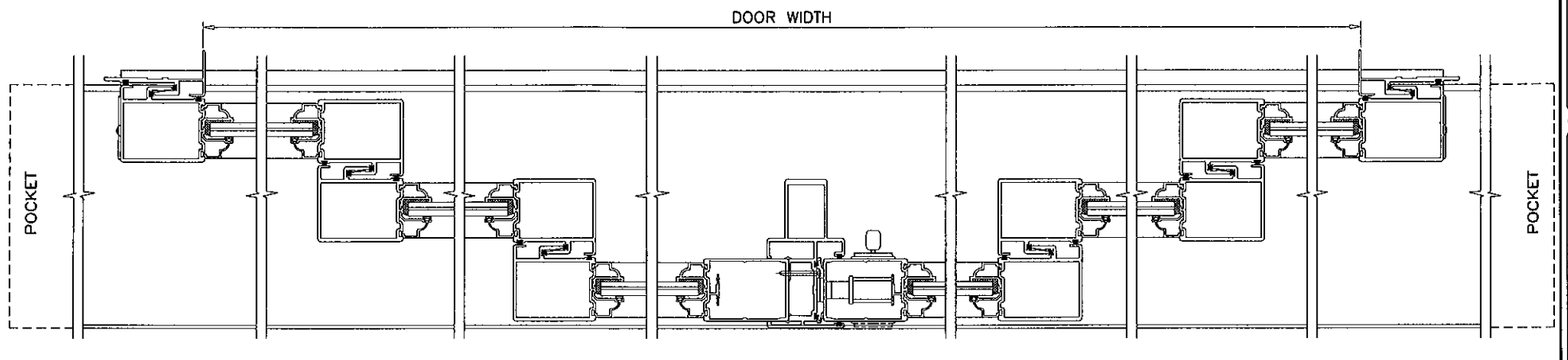

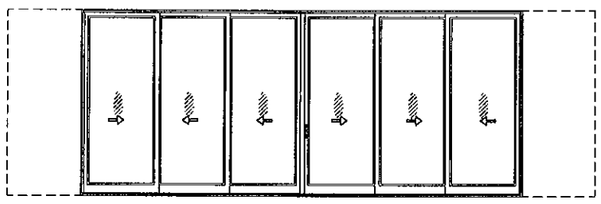

PXXXXXX(SHOWN)
PXXXXXO
XXXXXXP
OXXXXXP

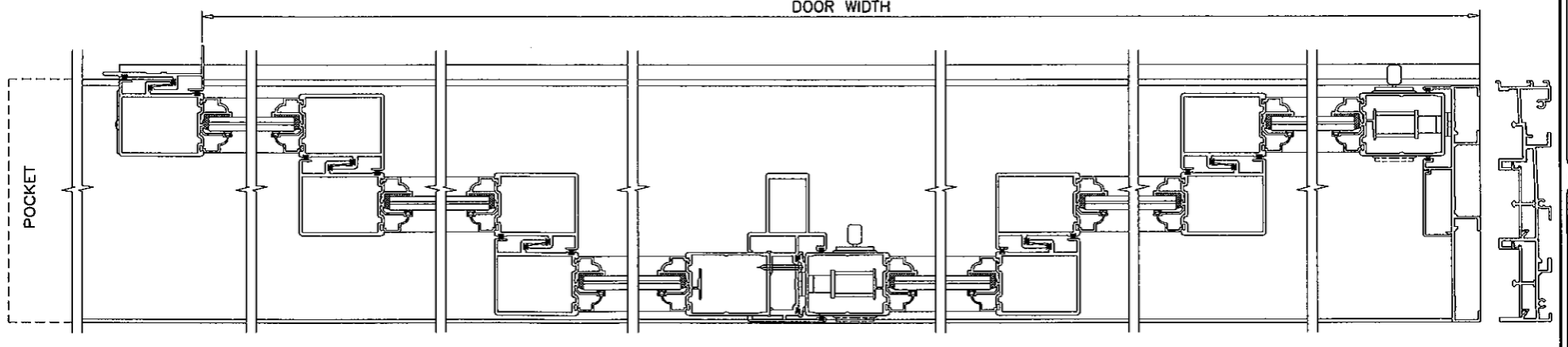

APPROVED CONFIGURATIONS
POCKETED DOORS

Over-all Door Width based on Panel Width

Panel Width	PXXX, XXXP Door Width	PXXXXXXP Door Width	PXXXXXX Door Width
24 1/4"	65 1/4"	129 3/8"	133 7/16"
30 1/4"	83 1/4"	165 3/8"	169 7/16"
36 1/4"	101 1/4"	201 3/8"	205 7/16"
42 1/4"	119 1/4"	237 3/8"	241 7/16"
48 1/4"	137 1/4"	273 3/8"	277 7/16"
54 1/4"	155 1/4"	309 3/8"	313 7/16"
60 1/4"	173 1/4"	345 3/8"	349 7/16"

MAXIMUM DOOR HEIGHT = 120"

Formula to convert Door Width to Panel Width

For PXXX: (Door Width + 7 1/2")/3 = Panel Width
For PXXXXXXP: (Door Width + 16 1/8")/6 = Panel Width
For PXXXXXX: (Door Width + 12 1/16")/6 = Panel Width

Formula to convert Panel Width to Door Width

For PXXX: Panel Width x 3 - 7 1/2" = Door Width
For PXXXXXXP: Panel Width x 6 - 16 1/8" = Door Width
For PXXXXXX: Panel Width x 6 - 12 1/16" = Door Width

Panel Height Formula

Door Height - 2 9/16" = Panel Height

D.L. OPENING
D.L.O HEIGHT = DOOR HEIGHT - 13 5/16"
D.L.O. WIDTH = PANEL WIDTH - 8"

Engr: JAVAD AHMAD
CIVIL
FLA. PE. # 70592
C.A.N. 3538

JUL 25 2012

PRODUCT REVISED
as complying with the Florida Building Code
Acceptance No 12-0416.05
Expiration Date 6/12/2017
By Miami Dade Product Control

AL-FAROOQ CORPORATION
ENGINEERS & PRODUCT DEVELOPMENT
1235 S.W. 87 AVE
MIAMI, FLORIDA 33174
TEL (305) 264-8100 FAX. (305) 262-6978

COMP-ANL\W09-58CGI

SERIES-560 ALUM SLIDING GLASS DOOR (L.M.I.)

CGI WINDOWS & DOORS
10100 N.W. 25TH STREET
MIAMI, FL. 33172
TEL. (305) 593-6590 FAX. (305) 593-6592

revisions:			
no	date	by	description
A	03.23.12		NO CHANGE THIS SHEET

date: 11-10-09
scale: -
dr. by: HAMID
chk. by:

drawing no.
W09-58

sheet 2.1 of 13

DESIGN LOAD CAPACITY – PSF (GLASS)

PANEL WIDTH INCHES	DOOR HEIGHT INCHES	GLASS TYPES '1' & '1A' W/O REINF. EXT.(+)	GLASS TYPES '1' & '1A' W/O REINF. INT.(−)	GLASS TYPES '2' & '2A' W/O REINF. EXT.(+)	GLASS TYPES '2' & '2A' W/O REINF. INT.(−)	GLASS TYPES '2' & '2A' WITH REINF. EXT.(+)	GLASS TYPES '2' & '2A' WITH REINF. INT.(−)
24-1/4	80	120.0	170.0	120.0	170.0	120.0	170.0
30-1/4		120.0	165.0	120.0	165.0	120.0	170.0
33-1/4		120.0	153.7	120.0	153.7	120.0	170.0
36-1/4		120.0	144.4	120.0	144.4	120.0	170.0
39-1/4		120.0	134.3	120.0	136.6	120.0	170.0
42-1/4		120.0	120.3	120.0	130.2	120.0	170.0
44-1/4		114.1	114.1	120.0	126.4	120.0	170.0
46-1/4		108.8	108.8	120.0	123.1	120.0	170.0
48-1/4		104.5	104.5	120.0	120.1	120.0	170.0
50-1/4		100.8	100.8	117.4	117.4	120.0	170.0
52-1/4		95.6	95.6	115.0	115.0	120.0	170.0
54-1/4		93.8	93.8	112.9	112.9	120.0	170.0
56-1/4		92.0	92.0	111.0	111.0	120.0	170.0
58-1/4		80.0	80.0	80.0	80.0	120.0	140.0
60-1/4		80.0	80.0	80.0	80.0	120.0	140.0
24-1/4	84	120.0	170.0	120.0	170.0	120.0	170.0
30-1/4		120.0	155.4	120.0	155.4	120.0	170.0
33-1/4		120.0	144.5	120.0	144.5	120.0	170.0
36-1/4		120.0	135.6	120.0	135.6	120.0	170.0
39-1/4		120.0	128.2	120.0	128.2	120.0	170.0
42-1/4		115.3	115.3	120.0	121.9	120.0	170.0
44-1/4		108.5	108.5	120.0	118.3	120.0	170.0
46-1/4		103.3	103.3	120.0	115.0	120.0	170.0
48-1/4		99.0	99.0	112.1	112.1	120.0	170.0
50-1/4		92.5	92.5	109.5	109.5	120.0	170.0
52-1/4		90.7	90.7	107.1	107.1	120.0	170.0
54-1/4		88.9	88.9	104.9	104.9	120.0	170.0
56-1/4		80.0	80.0	80.0	80.0	120.0	140.0
58-1/4		80.0	80.0	80.0	80.0	120.0	140.0
60-1/4		80.0	80.0	80.0	80.0	120.0	140.0
24-1/4	90	120.0	170.0	120.0	170.0	120.0	170.0
30-1/4		120.0	143.0	120.0	143.0	120.0	170.0
33-1/4		120.0	132.7	120.0	132.7	120.0	170.0
36-1/4		120.0	124.3	120.0	124.3	120.0	170.0
39-1/4		117.2	117.2	117.2	117.2	120.0	170.0
42-1/4		109.0	109.0	111.3	111.3	120.0	170.0
44-1/4		101.7	101.7	107.8	107.8	120.0	170.0
46-1/4		90.2	90.2	104.7	104.7	120.0	170.0
48-1/4		88.1	88.1	101.9	101.9	120.0	170.0
50-1/4		86.2	86.2	99.3	99.3	120.0	170.0
52-1/4		80.0	80.0	80.0	80.0	120.0	140.0
54-1/4		80.0	80.0	80.0	80.0	120.0	140.0
56-1/4		80.0	80.0	80.0	80.0	120.0	140.0
58-1/4		80.0	80.0	80.0	80.0	120.0	140.0
60-1/4		80.0	80.0	80.0	80.0	120.0	140.0
24-1/4	96	120.0	159.2	120.0	159.2	120.0	170.0
30-1/4		120.0	132.4	120.0	132.4	120.0	170.0
33-1/4		120.0	122.7	120.0	122.7	120.0	170.0
36-1/4		114.7	114.7	114.7	114.7	120.0	170.0
39-1/4		108.0	108.0	108.0	108.0	120.0	170.0
42-1/4		102.4	102.4	102.4	102.4	120.0	170.0
44-1/4		91.1	91.1	99.1	99.1	120.0	170.0
46-1/4		86.9	86.9	96.1	96.1	120.0	170.0
48-1/4		83.5	83.5	93.4	93.4	120.0	167.0
50-1/4		80.0	80.0	80.0	80.0	120.0	140.0
52-1/4		80.0	80.0	80.0	80.0	120.0	140.0
54-1/4		80.0	80.0	80.0	80.0	120.0	140.0
56-1/4		78.3	78.3	80.0	80.0	120.0	140.0
58-1/4		76.1	76.1	80.0	80.0	120.0	140.0
60-1/4		74.1	74.1	80.0	80.0	120.0	140.0

DESIGN LOAD CAPACITY – PSF (GLASS)

PANEL WIDTH INCHES	DOOR HEIGHT INCHES	GLASS TYPES '1' & '1A' W/O REINF. EXT.(+)	GLASS TYPES '1' & '1A' W/O REINF. INT.(−)	GLASS TYPES '2' & '2A' W/O REINF. EXT.(+)	GLASS TYPES '2' & '2A' W/O REINF. INT.(−)	GLASS TYPES '2' & '2A' WITH REINF. EXT.(+)	GLASS TYPES '2' & '2A' WITH REINF. INT.(−)
24-1/4	99	80.0	80.0	80.0	80.0	120.0	140.0
30-1/4		80.0	80.0	80.0	80.0	120.0	140.0
33-1/4		80.0	80.0	80.0	80.0	120.0	140.0
36-1/4		80.0	80.0	80.0	80.0	120.0	140.0
39-1/4		80.0	80.0	80.0	80.0	120.0	140.0
42-1/4		80.0	80.0	80.0	80.0	120.0	140.0
44-1/4		80.0	80.0	80.0	80.0	120.0	140.0
46-1/4		80.0	80.0	80.0	80.0	120.0	140.0
48-1/4		80.0	80.0	80.0	80.0	120.0	140.0
50-1/4		80.0	80.0	80.0	80.0	120.0	140.0
52-1/4		80.0	80.0	80.0	80.0	120.0	140.0
54-1/4		78.1	78.1	80.0	80.0	120.0	140.0
56-1/4		75.5	75.5	80.0	80.0	120.0	140.0
58-1/4		73.3	73.3	79.6	79.6	120.0	140.0
60-1/4		–	–	–	–	90.0	90.0
24-1/4	102	80.0	80.0	80.0	80.0	120.0	140.0
30-1/4		80.0	80.0	80.0	80.0	120.0	140.0
33-1/4		80.0	80.0	80.0	80.0	120.0	140.0
36-1/4		80.0	80.0	80.0	80.0	120.0	140.0
39-1/4		80.0	80.0	80.0	80.0	120.0	140.0
42-1/4		80.0	80.0	80.0	80.0	120.0	140.0
44-1/4		80.0	80.0	80.0	80.0	120.0	140.0
46-1/4		80.0	80.0	80.0	80.0	120.0	140.0
48-1/4		80.0	80.0	80.0	80.0	120.0	140.0
50-1/4		80.0	80.0	80.0	80.0	120.0	140.0
52-1/4		78.4	78.4	80.0	80.0	120.0	140.0
54-1/4		75.4	75.4	79.7	79.7	120.0	140.0
56-1/4		72.9	72.9	77.9	77.9	120.0	140.0
58-1/4		–	–	–	–	90.0	90.0
60-1/4		–	–	–	–	90.0	90.0
24-1/4	105	80.0	80.0	80.0	80.0	120.0	140.0
30-1/4		80.0	80.0	80.0	80.0	120.0	140.0
33-1/4		80.0	80.0	80.0	80.0	120.0	140.0
36-1/4		80.0	80.0	80.0	80.0	120.0	140.0
39-1/4		80.0	80.0	80.0	80.0	120.0	140.0
42-1/4		80.0	80.0	80.0	80.0	120.0	140.0
44-1/4		80.0	80.0	80.0	80.0	120.0	140.0
46-1/4		80.0	80.0	80.0	80.0	120.0	140.0
48-1/4		80.0	80.0	80.0	80.0	120.0	140.0
50-1/4		79.3	79.3	80.0	80.0	120.0	140.0
52-1/4		75.9	75.9	78.6	78.6	120.0	140.0
54-1/4		73.0	73.0	76.6	76.6	120.0	140.0
56-1/4		–	–	–	–	90.0	90.0
58-1/4		–	–	–	–	90.0	90.0
60-1/4		–	–	–	–	90.0	90.0
24-1/4	108	80.0	80.0	80.0	80.0	120.0	140.0
30-1/4		80.0	80.0	80.0	80.0	120.0	140.0
33-1/4		80.0	80.0	80.0	80.0	120.0	140.0
36-1/4		80.0	80.0	80.0	80.0	120.0	140.0
39-1/4		80.0	80.0	80.0	80.0	120.0	140.0
42-1/4		80.0	80.0	80.0	80.0	120.0	140.0
44-1/4		80.0	80.0	80.0	80.0	120.0	140.0
46-1/4		80.0	80.0	80.0	80.0	120.0	140.0
48-1/4		80.0	80.0	80.0	80.0	120.0	140.0
50-1/4		77.0	77.0	77.8	77.8	120.0	140.0
52-1/4		73.6	73.6	75.7	75.7	120.0	140.0
54-1/4		–	–	–	–	90.0	90.0
56-1/4		–	–	–	–	90.0	90.0
58-1/4		–	–	–	–	90.0	90.0
60-1/4		–	–	–	–	90.0	90.0

DESIGN LOAD CAPACITY – PSF (GLASS)

PANEL WIDTH INCHES	DOOR HEIGHT INCHES	GLASS TYPES '1' & '1A' W/O REINF. EXT.(+)	GLASS TYPES '1' & '1A' W/O REINF. INT.(−)	GLASS TYPES '2' & '2A' W/O REINF. EXT.(+)	GLASS TYPES '2' & '2A' W/O REINF. INT.(−)	GLASS TYPES '2' & '2A' WITH REINF. EXT.(+)	GLASS TYPES '2' & '2A' WITH REINF. INT.(−)
24-1/4	111	80.0	80.0	80.0	80.0	120.0	140.0
30-1/4		80.0	80.0	80.0	80.0	120.0	140.0
33-1/4		80.0	80.0	80.0	80.0	120.0	140.0
36-1/4		80.0	80.0	80.0	80.0	120.0	140.0
39-1/4		80.0	80.0	80.0	80.0	120.0	140.0
42-1/4		80.0	80.0	80.0	80.0	120.0	140.0
44-1/4		80.0	80.0	80.0	80.0	120.0	140.0
46-1/4		79.7	79.7	79.7	79.7	120.0	140.0
48-1/4		77.3	77.3	77.3	77.3	120.0	140.0
50-1/4		74.8	74.8	75.0	75.0	120.0	140.0
52-1/4		–	–	–	–	90.0	90.0
54-1/4		–	–	–	–	90.0	90.0
56-1/4		–	–	–	–	90.0	90.0
58-1/4		–	–	–	–	90.0	90.0
60-1/4		–	–	–	–	90.0	90.0
24-1/4	114	80.0	80.0	80.0	80.0	120.0	140.0
30-1/4		80.0	80.0	80.0	80.0	120.0	140.0
33-1/4		80.0	80.0	80.0	80.0	120.0	140.0
36-1/4		80.0	80.0	80.0	80.0	120.0	140.0
39-1/4		80.0	80.0	80.0	80.0	120.0	140.0
42-1/4		80.0	80.0	80.0	80.0	120.0	140.0
44-1/4		79.7	79.7	80.0	80.0	120.0	140.0
46-1/4		77.0	77.0	77.0	77.0	120.0	140.0
48-1/4		74.7	74.7	74.7	74.7	120.0	140.0
50-1/4		72.5	72.5	72.5	72.5	120.0	140.0
52-1/4		–	–	–	–	90.0	90.0
54-1/4		–	–	–	–	90.0	90.0
56-1/4		–	–	–	–	90.0	90.0
58-1/4		–	–	–	–	90.0	90.0
60-1/4		–	–	–	–	90.0	90.0
24-1/4	117	80.0	80.0	80.0	80.0	120.0	140.0
30-1/4		80.0	80.0	80.0	80.0	120.0	140.0
33-1/4		80.0	80.0	80.0	80.0	120.0	140.0
36-1/4		80.0	80.0	80.0	80.0	120.0	140.0
39-1/4		80.0	80.0	80.0	80.0	120.0	140.0
42-1/4		79.9	79.9	80.0	80.0	120.0	140.0
44-1/4		77.1	77.1	79.9	79.9	120.0	140.0
46-1/4		74.6	74.6	74.6	74.6	120.0	140.0
48-1/4		72.3	72.3	72.3	72.3	120.0	140.0
50-1/4		–	–	–	–	90.0	90.0
52-1/4		–	–	–	–	90.0	90.0
54-1/4		–	–	–	–	90.0	90.0
56-1/4		–	–	–	–	90.0	90.0
58-1/4		–	–	–	–	90.0	90.0
60-1/4		–	–	–	–	90.0	90.0
24-1/4	120	80.0	80.0	80.0	80.0	120.0	140.0
30-1/4		80.0	80.0	80.0	80.0	120.0	140.0
33-1/4		80.0	80.0	80.0	80.0	120.0	140.0
36-1/4		80.0	80.0	80.0	80.0	120.0	140.0
39-1/4		80.0	80.0	80.0	80.0	120.0	140.0
42-1/4		77.5	77.5	80.0	80.0	120.0	140.0
44-1/4		74.8	74.8	77.5	77.5	120.0	140.0
46-1/4		72.3	72.3	72.3	72.3	120.0	140.0
48-1/4		70.0	70.0	70.0	70.0	120.0	140.0
50-1/4		–	–	–	–	90.0	90.0
52-1/4		–	–	–	–	90.0	90.0
54-1/4		–	–	–	–	90.0	90.0
56-1/4		–	–	–	–	90.0	90.0
58-1/4		–	–	–	–	90.0	90.0
60-1/4		–	–	–	–	90.0	90.0

GLASS CAPACITY CHARTS

NOTE:
APPROPRIATE SILL RISER TO BE SELECTED FOR MAX. POSITIVE DESIGN PRESSURE SEE DETAILS ON SHEET 4.
OBTAIN ANCHOR TYPE AND CONFIGURATION TO USE FROM ANCHOR CHARTS ON SHEET 5
MULLION SIZE AND CAPACITY TO BE OBTAINED FROM CHARTS ON SHEET 13.
LOWEST APPLICABLE VALUE FROM THE ABOVE WILL APPLY TO CONDITION REVIEWED.

PRODUCT REVISED
as complying with the Florida Building Code
Acceptance No 12-0416.05
Expiration Date 6/12/2017
Miami-Dade Product Control

NOTE:
GLASS CAPACITIES ON THIS SHEET ARE BASED ON ASTM E1300-04 (3 SEC. GUSTS) AND FLORIDA BUILDING COMMISSION DECLARATORY STATEMENT DCA05-DEC-219

Engr: JAVAD AHMAD
CIVIL
FLA. PE # 70592
C.A.N. 3538

JUL 25 2012

afc
AL-FAROOQ CORPORATION
ENGINEERS & PRODUCT DEVELOPMENT
1235 S.W. 87 AVE
MIAMI, FLORIDA 33174
TEL. (305) 264-8100 FAX. (305) 262-6978
COMP-ANL\W09-58CGI

SERIES-560 ALUM SLIDING GLASS DOOR (L.M.L.)

CGI WINDOWS & DOORS
10100 N.W. 25TH STREET
MIAMI, FL. 33172
TEL. (305) 593-6590 FAX. (305) 593-6592

revisions:

no	date	by	description
A	03.23.12		NO CHANGE THIS SHEET

date: 11-10-09
scale: –
dr. by: HAMID
chk. by:

drawing no. W09-58

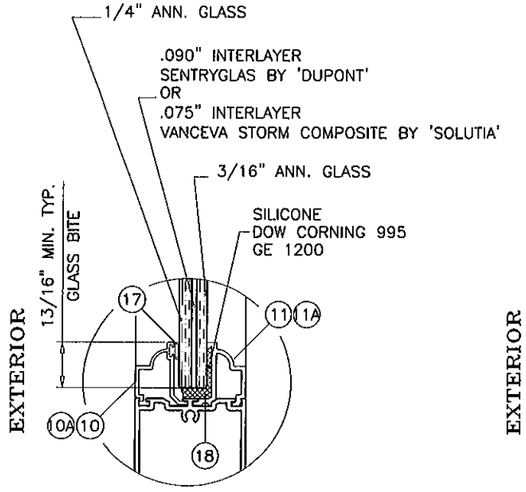

GLASS TYPE '1'

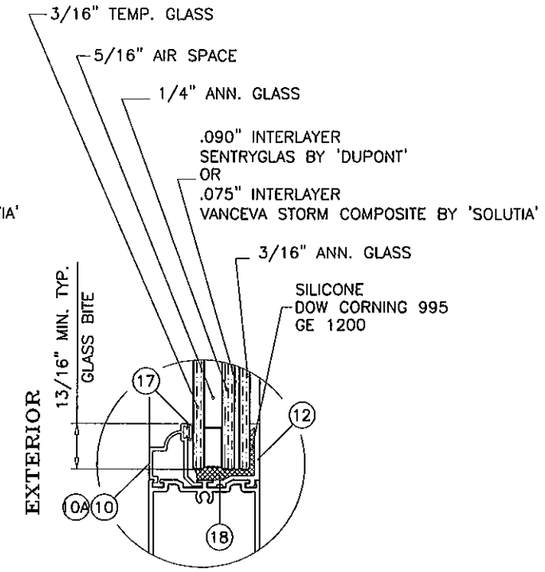

GLASS TYPE '1A'

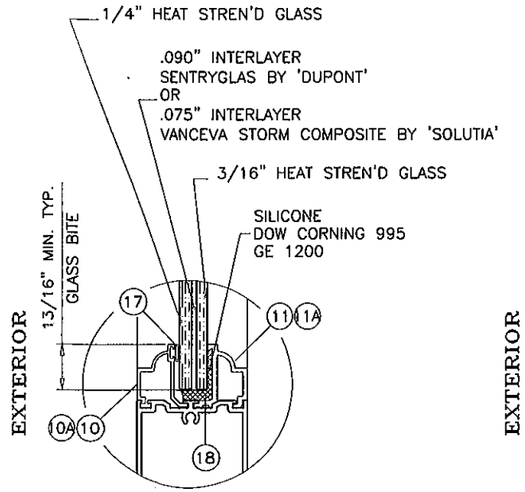

GLASS TYPE '2'

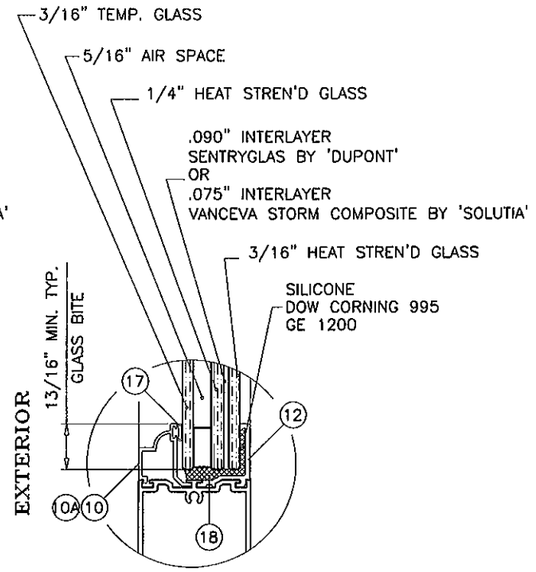

GLASS TYPE '2A'

GLAZING OPTIONS

NOTE:
3/16" AND 1/4" PIECES OF GLASS ON THE
1/2" LAMINATED UNIT ARE INTERCHANGEABLE
(EX: 3/16" + 1/4" OR 1/4" + 3/16")

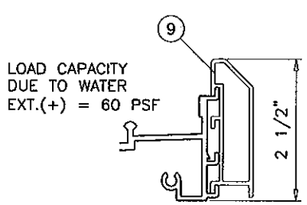

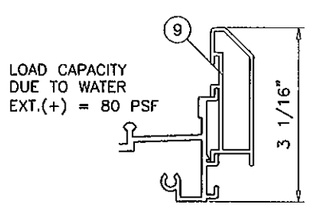

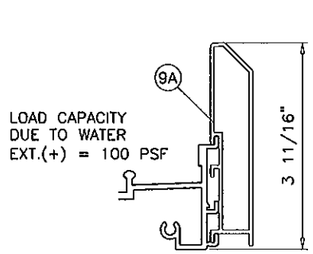

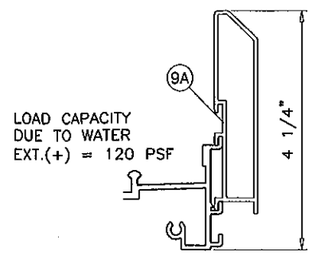

LOAD CAPACITIES SHOWN IN CHART ON SHEET 3 ARE FOR DOORS USING 4-1/4" SILL HEIGHTS
FOR DOORS USING LOWER SILL HEIGHTS LIMIT EXTERIOR(+) LOADS AS SHOWN ABOVE.

Engr.: JAVAD AHMAD
CIVIL
FLA. PE # 70592
C.A.N. 3538
JUL 25 2012

PRODUCT REVISED
as complying with the Florida
Building Code
Acceptance No 12-0416.05
Expiration Date 6/12/2017
By
Miami Dade Product Control

AL-FAROOQ CORPORATION
ENGINEERS & PRODUCT DEVELOPMENT
1235 S.W. 87 AVE
MIAMI, FLORIDA 33174
TEL (305) 264-8100 FAX. (305) 262-6978

COMP-ANL\W09-58CGI

SERIES-560 ALUM SLIDING GLASS DOOR (L.M.I.)

CGI WINDOWS & DOORS
10100 N.W. 25TH STREET
MIAMI, FL. 33172
TEL. (305) 593-6590 FAX. (305) 593-6592

revisions:

no	date	by	description
A	03.23.12		UPDATED TO 2010 FBC

date: 11-10-09
scale: -
dr. by: HAMID
chk. by:

drawing no.
W09-58

DESIGN LOAD CAPACITY – PSF (ANCHORS)

PANEL WIDTH INCHES	DOOR HEIGHT INCHES	ANCHORS TYPE 'A' 1/4" SHIM SPACE CLUSTER OF			ANCHORS TYPE 'A' & 'B' 3/8" SHIM SPACE CLUSTER OF			ANCHORS TYPE 'A' & 'B' 1/2" SHIM SPACE CLUSTER OF			ANCHORS TYPE 'B' 1/4" SHIM SPACE CLUSTER OF			ANCHORS TYPE 'C' 1/4" SHIM SPACE CLUSTER OF		
		4	6	8	4	6	8	4	6	8	4	6	8	4	6	8
24-1/4	80	170.0	170.0	170.0	140.0	170.0	170.0	113.4	170.0	170.0	170.0	170.0	170.0	170.0	170.0	170.0
30-1/4		150.3	170.0	170.0	117.4	170.0	170.0	95.1	142.6	170.0	170.0	170.0	170.0	170.0	170.0	170.0
36-1/4		131.5	170.0	170.0	102.7	154.1	170.0	83.2	124.8	166.4	170.0	170.0	170.0	170.0	170.0	170.0
42-1/4		118.6	170.0	170.0	92.6	138.9	170.0	75.0	112.5	150.1	170.0	170.0	170.0	170.0	170.0	170.0
48-1/4		109.4	164.1	170.0	85.5	128.2	170.0	69.2	103.8	138.4	170.0	170.0	170.0	170.0	170.0	170.0
54-1/4		102.8	154.2	170.0	80.3	120.5	160.6	65.1	97.6	130.1	170.0	170.0	170.0	170.0	170.0	170.0
60-1/4		98.1	147.2	170.0	76.7	115.0	153.3	62.1	93.2	124.2	170.0	170.0	170.0	170.0	170.0	170.0
24-1/4	84	169.2	170.0	170.0	132.2	170.0	170.0	107.1	160.6	170.0	170.0	170.0	170.0	170.0	170.0	170.0
30-1/4		141.5	170.0	170.0	110.6	165.9	170.0	89.6	134.4	170.0	170.0	170.0	170.0	170.0	170.0	170.0
36-1/4		123.5	170.0	170.0	96.5	144.7	170.0	78.2	117.2	156.3	170.0	170.0	170.0	170.0	170.0	170.0
42-1/4		111.0	166.5	170.0	86.7	130.1	170.0	70.3	105.4	140.5	170.0	170.0	170.0	170.0	170.0	170.0
48-1/4		102.1	153.1	170.0	79.8	119.6	159.5	64.6	96.9	129.2	170.0	170.0	170.0	170.0	170.0	170.0
54-1/4		95.6	143.4	170.0	74.7	112.0	149.3	60.5	90.7	121.0	166.1	170.0	170.0	170.0	170.0	170.0
60-1/4		90.9	136.3	170.0	71.0	106.5	142.0	57.5	86.2	115.0	157.9	170.0	170.0	170.0	170.0	170.0
24-1/4	90	156.2	170.0	170.0	122.0	170.0	170.0	98.8	148.2	170.0	170.0	170.0	170.0	170.0	170.0	170.0
30-1/4		130.2	170.0	170.0	101.7	152.6	170.0	82.4	123.6	164.8	170.0	170.0	170.0	170.0	170.0	170.0
36-1/4		113.2	169.8	170.0	88.4	132.6	170.0	71.6	107.4	143.3	170.0	170.0	170.0	170.0	170.0	170.0
42-1/4		101.3	152.0	170.0	79.2	118.8	158.4	64.1	96.2	128.3	170.0	170.0	170.0	170.0	170.0	170.0
48-1/4		92.8	139.2	170.0	72.5	108.7	145.0	58.7	88.1	117.4	161.3	170.0	170.0	170.0	170.0	170.0
54-1/4		86.5	129.7	170.0	67.5	101.3	135.1	54.7	82.1	109.4	150.3	170.0	170.0	161.8	170.0	170.0
60-1/4		81.8	122.6	163.5	63.9	95.8	127.7	51.7	77.6	103.5	142.1	170.0	170.0	153.0	170.0	170.0
24-1/4	96	145.0	170.0	170.0	113.3	169.9	170.0	91.8	137.6	170.0	170.0	170.0	170.0	170.0	170.0	170.0
30-1/4		120.5	170.0	170.0	94.2	141.3	170.0	76.3	114.4	152.6	170.0	170.0	170.0	170.0	170.0	170.0
36-1/4		104.5	156.7	170.0	81.6	122.4	163.2	66.1	99.2	132.2	170.0	170.0	170.0	170.0	170.0	170.0
42-1/4		93.2	139.8	170.0	72.8	109.2	145.7	59.0	88.5	118.0	162.0	170.0	170.0	170.0	170.0	170.0
48-1/4		85.0	127.6	170.0	66.4	99.7	132.9	53.8	80.7	107.6	147.8	170.0	170.0	159.1	170.0	170.0
54-1/4		78.9	118.4	157.9	61.7	92.5	123.3	49.9	74.9	99.9	137.2	170.0	170.0	147.7	170.0	170.0
60-1/4		74.3	111.5	148.6	58.1	87.1	116.1	47.0	70.5	94.0	129.2	170.0	170.0	139.0	170.0	170.0
24-1/4	102	135.3	170.0	170.0	105.7	158.6	170.0	85.6	128.4	170.0	170.0	170.0	170.0	170.0	170.0	170.0
30-1/4		112.2	168.3	170.0	87.7	131.5	170.0	71.0	106.5	142.0	170.0	170.0	170.0	170.0	170.0	170.0
36-1/4		97.0	145.5	170.0	75.8	113.7	151.6	61.4	92.1	122.8	168.6	170.0	170.0	170.0	170.0	170.0
42-1/4		86.3	129.5	170.0	67.4	101.1	134.9	54.6	81.9	109.2	150.0	170.0	170.0	161.5	170.0	170.0
48-1/4		78.5	117.7	157.0	61.3	92.0	122.6	49.7	74.5	99.3	136.4	170.0	170.0	146.9	170.0	170.0
54-1/4		72.6	108.9	145.2	56.7	85.1	113.4	45.9	68.9	91.9	126.2	170.0	170.0	135.8	170.0	170.0
60-1/4		68.1	102.2	136.2	53.2	79.8	106.4	43.1	64.6	86.2	118.4	170.0	170.0	127.4	170.0	170.0
24-1/4	108	126.8	170.0	170.0	99.1	148.6	170.0	80.3	120.4	160.5	170.0	170.0	170.0	170.0	170.0	170.0
30-1/4		105.0	157.5	170.0	82.0	123.0	164.0	66.4	99.6	132.9	170.0	170.0	170.0	170.0	170.0	170.0
36-1/4		90.5	135.8	170.0	70.7	106.1	141.4	57.3	85.9	114.6	157.3	170.0	170.0	169.4	170.0	170.0
42-1/4		80.3	120.5	160.7	62.8	94.2	125.5	50.8	76.3	101.7	139.7	170.0	170.0	150.3	170.0	170.0
48-1/4		72.9	109.3	145.7	56.9	85.4	113.9	46.1	69.2	92.2	126.7	170.0	170.0	136.4	170.0	170.0
54-1/4		67.2	100.8	134.4	52.5	78.8	105.0	42.5	63.8	85.1	116.8	170.0	170.0	125.8	170.0	170.0
60-1/4		62.9	94.3	125.7	49.1	73.7	98.2	39.8	59.7	79.6	109.3	163.9	170.0	117.6	170.0	170.0
24-1/4	114	119.4	170.0	170.0	93.3	139.9	170.0	75.5	113.3	151.1	170.0	170.0	170.0	170.0	170.0	170.0
30-1/4		98.6	147.9	170.0	77.0	115.5	154.1	62.4	93.6	124.8	170.0	170.0	170.0	170.0	170.0	170.0
36-1/4		84.9	127.3	169.7	66.3	99.4	132.6	53.7	80.5	107.4	147.5	170.0	170.0	158.8	170.0	170.0
42-1/4		75.2	112.7	150.3	58.7	88.1	117.4	47.6	71.3	95.1	130.6	170.0	170.0	140.6	170.0	170.0
48-1/4		68.0	102.0	136.0	53.1	79.7	106.3	43.0	64.6	86.1	118.2	170.0	170.0	127.2	170.0	170.0
54-1/4		62.6	93.9	125.1	48.9	73.3	97.8	39.6	59.4	79.2	108.8	163.2	170.0	117.1	170.0	170.0
60-1/4		58.4	87.5	116.7	45.6	68.4	91.2	36.9	55.4	73.9	101.4	152.2	170.0	109.2	163.8	170.0
24-1/4	120	112.7	169.1	170.0	88.1	132.1	170.0	71.3	107.0	142.7	170.0	170.0	170.0	170.0	170.0	170.0
30-1/4		93.0	139.4	170.0	72.6	108.9	145.2	58.8	88.2	117.7	161.6	170.0	170.0	170.0	170.0	170.0
36-1/4		79.9	119.8	159.7	62.4	93.6	124.8	50.5	75.8	101.1	138.8	170.0	170.0	149.4	170.0	170.0
42-1/4		70.6	105.9	141.2	55.2	82.7	110.3	44.7	67.0	89.3	122.7	170.0	170.0	132.1	170.0	170.0
48-1/4		63.8	95.6	127.5	49.8	74.7	99.6	40.3	60.5	80.7	110.8	166.2	170.0	119.3	170.0	170.0
54-1/4		58.5	87.8	117.1	45.7	68.6	91.5	37.0	55.6	74.1	101.7	152.6	170.0	109.5	164.3	170.0
60-1/4		54.5	81.7	108.9	42.5	63.8	85.1	34.5	51.7	68.9	94.7	142.0	170.0	101.9	152.9	170.0

INTERPOLATION BETWEEN WIDTHS AND HEIGHTS ACCEPTABLE

NOTE:

NOTE:
SEE SHEET 8 FOR ANCHOR TYPES AND DETAILS.
ANCHOR CAPACITIES LISTED ON THIS SHEET TO BE USED IN CONJUNCTION WITH GLASS/REINFORCING AND MULLION CHARTS IN THIS DOCUMENT.
LOWER APPLICABLE VALUES CONTROL.

Engr: JAVAD AHMAD
CIVIL
FLA. PE # 70592
C.A.N. 3538
JUL 25 2012

PRODUCT REVISED
as complying with the Florida Building Code
Acceptance No. 12-0416.05
Expiration Date 10/12/2017
By Miami Dade Product Control

AL-FAROOQ CORPORATION
ENGINEERS & PRODUCT DEVELOPMENT
1235 S.W. 87 AVE
MIAMI, FLORIDA 33174
TEL. (305) 264-8100 FAX. (305) 262-6978
COMP-ANL\W09-58CGI

SERIES-560 ALUM SLIDING GLASS DOOR (L.M.I.)

CGI WINDOWS & DOORS
10100 N.W. 25TH STREET
MIAMI, FL. 33172
TEL. (305) 593-6590 FAX. (305) 593-6592

revisions:

no	date	by	description
A	03.23.12		UPDATED TO 2010 FBC

date: 11-10-09
scale: -
dr. by: HAMID
chk. by:

drawing no. W09-58

sheet 5 of 13

DESIGN LOAD CAPACITY – PSF (ANCHORS)													
		ANCHORS TYPE 'D'			ANCHORS TYPE 'D' & 'E'			ANCHORS TYPE 'D' & 'E'			ANCHORS TYPE 'E'		
		1/4" SHIM SPACE			3/8" SHIM SPACE			1/2" SHIM SPACE			1/4" SHIM SPACE		
PANEL WIDTH INCHES	DOOR HEIGHT INCHES	CLUSTER OF			CLUSTER OF			CLUSTER OF			CLUSTER OF		
		4	6	8	4	6	8	4	6	8	4	6	8
24-1/4	80	170.0	170.0	170.0	170.0	170.0	170.0	158.2	170.0	170.0	170.0	170.0	170.0
30-1/4		170.0	170.0	170.0	161.4	170.0	170.0	132.7	170.0	170.0	170.0	170.0	170.0
36-1/4		155.1	170.0	170.0	141.2	170.0	170.0	116.1	170.0	170.0	170.0	170.0	170.0
42-1/4		139.9	170.0	170.0	127.4	170.0	170.0	104.7	157.0	170.0	170.0	170.0	170.0
48-1/4		129.0	170.0	170.0	117.5	170.0	170.0	96.6	144.9	170.0	170.0	170.0	170.0
54-1/4		121.3	170.0	170.0	110.4	165.7	170.0	90.8	136.1	170.0	170.0	170.0	170.0
60-1/4		115.8	170.0	170.0	105.4	158.1	170.0	86.6	130.0	170.0	165.6	170.0	170.0
24-1/4	84	170.0	170.0	170.0	170.0	170.0	170.0	149.4	170.0	170.0	170.0	170.0	170.0
30-1/4		167.0	170.0	170.0	152.1	170.0	170.0	125.0	170.0	170.0	170.0	170.0	170.0
36-1/4		145.7	170.0	170.0	132.7	170.0	170.0	109.0	163.5	170.0	170.0	170.0	170.0
42-1/4		131.0	170.0	170.0	119.3	170.0	170.0	98.0	147.0	170.0	170.0	170.0	170.0
48-1/4		120.4	170.0	170.0	109.7	164.5	170.0	90.1	135.2	170.0	170.0	170.0	170.0
54-1/4		112.8	169.1	170.0	102.7	154.0	170.0	84.4	126.6	168.8	161.3	170.0	170.0
60-1/4		107.2	160.8	170.0	97.6	146.4	170.0	80.2	120.3	160.4	153.3	170.0	170.0
24-1/4	90	170.0	170.0	170.0	167.8	170.0	170.0	137.9	170.0	170.0	170.0	170.0	170.0
30-1/4		153.6	170.0	170.0	139.9	170.0	170.0	114.9	170.0	170.0	170.0	170.0	170.0
36-1/4		133.5	170.0	170.0	121.6	170.0	170.0	99.9	149.9	170.0	170.0	170.0	170.0
42-1/4		119.6	170.0	170.0	108.9	163.3	170.0	89.5	134.2	170.0	170.0	170.0	170.0
48-1/4		109.5	164.2	170.0	99.7	149.5	170.0	81.9	122.9	163.8	156.6	170.0	170.0
54-1/4		102.0	153.0	170.0	92.9	139.3	170.0	76.3	114.5	152.7	145.9	170.0	170.0
60-1/4		96.4	144.7	170.0	87.8	131.7	170.0	72.2	108.3	144.3	138.0	170.0	170.0
24-1/4	96	170.0	170.0	170.0	155.8	170.0	170.0	128.0	170.0	170.0	170.0	170.0	170.0
30-1/4		142.2	170.0	170.0	129.5	170.0	170.0	106.4	159.6	170.0	170.0	170.0	170.0
36-1/4		123.2	170.0	170.0	112.2	168.3	170.0	92.2	138.3	170.0	170.0	170.0	170.0
42-1/4		110.0	165.0	170.0	100.1	150.2	170.0	82.3	123.4	164.6	157.3	170.0	170.0
48-1/4		100.3	150.5	170.0	91.4	137.0	170.0	75.1	112.6	150.1	143.5	170.0	170.0
54-1/4		93.1	139.7	170.0	84.8	127.2	169.6	69.7	104.5	139.4	133.2	170.0	170.0
60-1/4		87.7	131.5	170.0	79.8	119.7	159.6	65.6	98.4	131.2	125.4	170.0	170.0
24-1/4	102	159.6	170.0	170.0	145.4	170.0	170.0	119.5	170.0	170.0	170.0	170.0	170.0
30-1/4		132.4	170.0	170.0	120.5	170.0	170.0	99.1	148.6	170.0	170.0	170.0	170.0
36-1/4		114.4	170.0	170.0	104.2	156.3	170.0	85.6	128.4	170.0	163.7	170.0	170.0
42-1/4		101.8	152.7	170.0	92.7	139.1	170.0	76.2	114.3	152.4	145.6	170.0	170.0
48-1/4		92.6	138.9	170.0	84.3	126.5	168.6	69.3	103.9	138.6	132.4	170.0	170.0
54-1/4		85.6	128.5	170.0	78.0	117.0	156.0	64.1	96.1	128.2	122.5	170.0	170.0
60-1/4		80.3	120.5	160.7	73.2	109.7	146.3	60.1	90.2	120.2	114.9	170.0	170.0
24-1/4	108	149.6	170.0	170.0	136.3	170.0	170.0	112.0	168.0	170.0	170.0	170.0	170.0
30-1/4		123.8	170.0	170.0	112.8	169.1	170.0	92.7	139.0	170.0	170.0	170.0	170.0
36-1/4		106.8	160.2	170.0	97.2	145.9	170.0	79.9	119.9	159.8	152.8	170.0	170.0
42-1/4		94.8	142.2	170.0	86.3	129.5	170.0	70.9	106.4	141.9	135.6	170.0	170.0
48-1/4		86.0	128.9	170.0	78.3	117.4	156.6	64.3	96.5	128.7	123.0	170.0	170.0
54-1/4		79.3	118.9	158.6	72.2	108.3	144.4	59.3	89.0	118.7	113.4	170.0	170.0
60-1/4		74.1	111.2	148.3	67.5	101.3	135.0	55.5	83.2	111.0	106.1	159.1	170.0
24-1/4	114	140.8	170.0	170.0	128.2	170.0	170.0	105.4	158.1	170.0	170.0	170.0	170.0
30-1/4		116.3	170.0	170.0	105.9	158.9	170.0	87.0	130.6	170.0	166.4	170.0	170.0
36-1/4		100.1	150.2	170.0	91.2	136.7	170.0	74.9	112.4	149.8	143.2	170.0	170.0
42-1/4		88.7	133.0	170.0	80.7	121.1	161.5	66.3	99.5	132.7	126.8	170.0	170.0
48-1/4		80.2	120.3	160.5	73.1	109.6	146.1	60.0	90.1	120.1	114.8	170.0	170.0
54-1/4		73.8	110.7	147.6	67.2	100.8	134.4	55.2	82.9	110.5	105.6	158.4	170.0
60-1/4		68.8	103.3	137.7	62.7	94.0	125.4	51.5	77.3	103.0	98.5	147.7	170.0
24-1/4	120	133.0	170.0	170.0	121.1	170.0	170.0	99.5	149.3	170.0	170.0	170.0	170.0
30-1/4		109.7	164.5	170.0	99.9	149.8	170.0	82.1	123.1	164.1	156.9	170.0	170.0
36-1/4		94.2	141.3	170.0	85.8	128.7	170.0	70.5	105.7	141.0	134.8	170.0	170.0
42-1/4		83.3	124.9	166.6	75.8	113.8	151.7	62.3	93.5	124.6	119.1	170.0	170.0
48-1/4		75.2	112.8	150.4	68.5	102.7	137.0	56.3	84.4	112.6	107.6	161.4	170.0
54-1/4		69.0	103.6	138.1	62.9	94.3	125.8	51.7	77.5	103.3	98.8	148.2	170.0
60-1/4		64.2	96.4	128.5	58.5	87.8	117.0	48.1	72.1	96.2	91.9	137.9	170.0

INTERPOLATION BETWEEN WIDTHS AND HEIGHTS ACCEPTABLE

NOTE:
SEE SHEET 8 FOR ANCHOR TYPES AND DETAILS.
ANCHOR CAPACITIES LISTED ON THIS SHEET TO BE USED IN CONJUNCTION WITH GLASS/REINFORCING AND MULLION CHARTS IN THIS DOCUMENT.
LOWER APPLICABLE VALUES CONTROL.

Engr: JAVAD AHMAD
CIVIL
FLA. PE # 70592
C.A.N. 3538

JUL. 25 2012

PRODUCT REVISED
as complying with the Florida Building Code
Acceptance No. 12-0411.05
Expiration Date 6/17/2017
By
Miami Dade Product Control

afc
AL-FAROOQ CORPORATION
ENGINEERS & PRODUCT DEVELOPMENT
1235 S.W. 87 AVE
MIAMI, FLORIDA 33174
TEL. (305) 264-8100 FAX. (305) 262-6978

COMP-ANL\W09-58CGI

SERIES-560 ALUM SLIDING GLASS DOOR (L.M.I.)

CGI WINDOWS & DOORS
10100 N.W. 25TH STREET
MIAMI, FL. 33172
TEL. (305) 593-6590 FAX. (305) 593-6592

revisions:

no	date	by	description
A	03.23.12		UPDATED TO 2010 FBC

date: 11-10-09
scale: -
dr. by: HAMID
chk. by:

drawing no.
W09-58

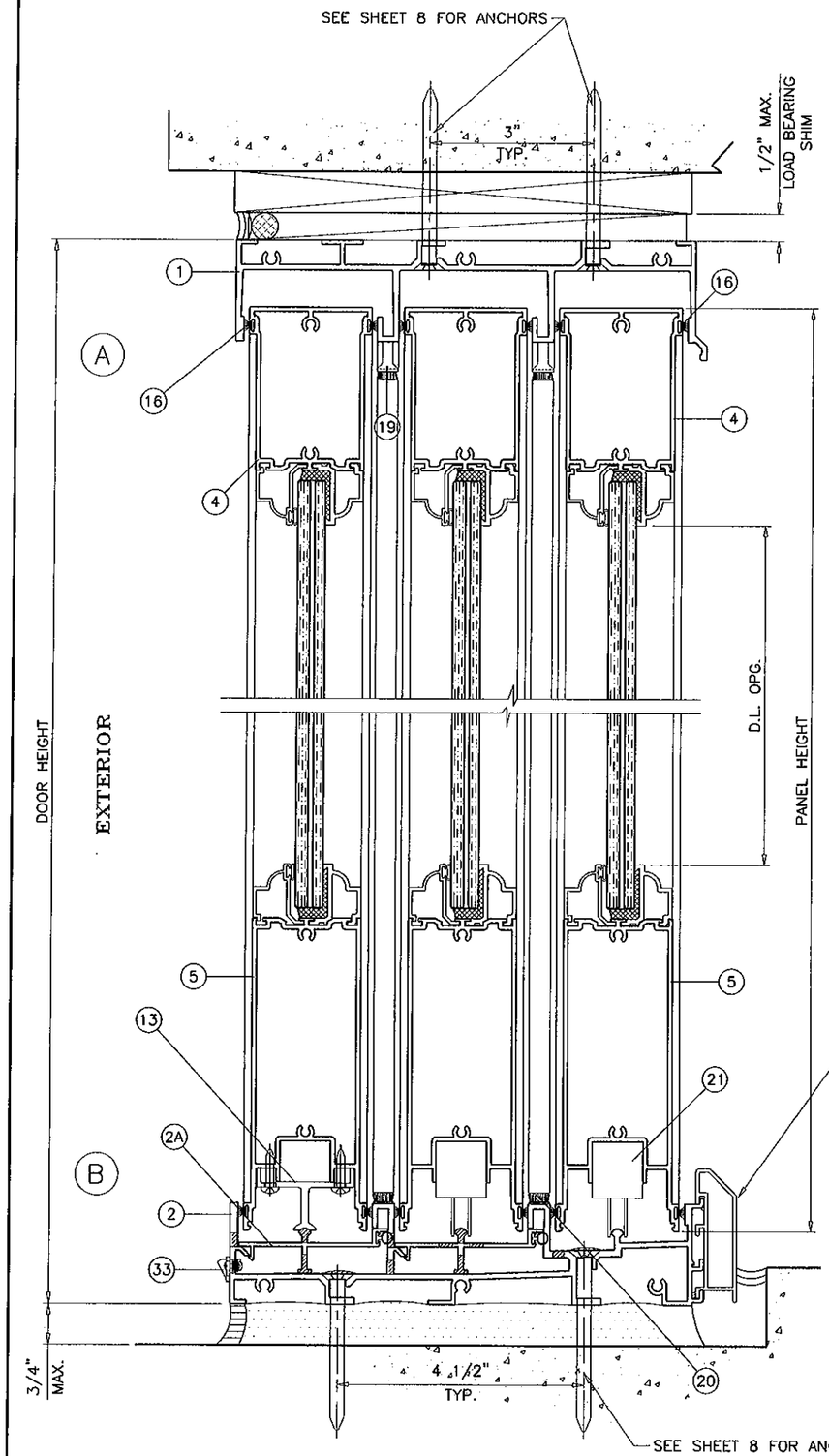

SILL WITH RISER APPROVED FOR WATER RESISTANCE SEE SHEET 4 FOR CAPACITY

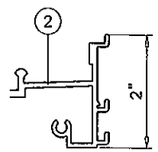

SILL WITHOUT RISER NOT APPROVED FOR INSTALLATIONS WHERE WATER INFILTRATION RESISTANCE IS REQUIRED.
MAX. DESIGN LOAD FOR THIS SILL IS THE SAME AS 4-1/4" RISER.

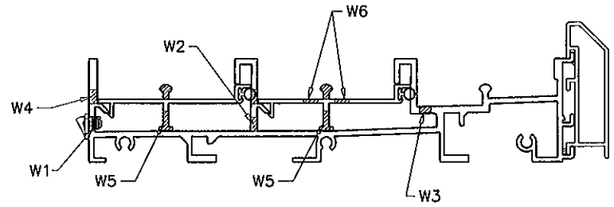

WEEPS:

W1 = .30" X 1-5/8" WEEP SLOTS WITH PLASTIC COVER AT 9" FROM EACH END AND ±48" O.C.

W2 = 1/4" X 2" WEEP SLOTS AT 4" FROM EACH END AND ±12" O.C.

W3 = 1/4" X 5/8" WEEP HOLES AT 9" FROM EACH END AND ±48" O.C.

W4 = 1/4" X 2" WEEP SLOTS AT 4" FROM EACH END AND ±12" O.C.

W5 = .35" X 5/8" WEEP HOLES AT ±18" O.C.

W6 = 1/4" X 5/8" WEEP HOLES AT ±18" O.C.

Engr: JAVAD AHMAD
CIVIL
FLA. PE # 70592
C.A.N. 3538

JUL 25 2012

PRODUCT REVISED
as complying with the Florida Building Code
Acceptance No. 12-0416.05
Expiration Date 6/12/2017
By
Miami-Dade Product Control

AL-FAROOQ CORPORATION
ENGINEERS & PRODUCT DEVELOPMENT
1235 S.W. 87 AVE
MIAMI, FLORIDA 33174
TEL (305) 264-8100 FAX. (305) 262-6978
COMP-ANL\W09-58CGI

SERIES-560 ALUM SLIDING GLASS DOOR (L.M.I.)

CGI WINDOWS & DOORS
10100 N.W. 25TH STREET
MIAMI, FL. 33172
TEL. (305) 593-6590 FAX. (305) 593-6592

revisions:

no	date	by	description
A	03.23.12		NO CHANGE THIS SHEET

date: 11-10-09
scale: 3/8" = 1"
dr. by: HAMID
chk. by:

drawing no. W09-58

sheet 7 of 13

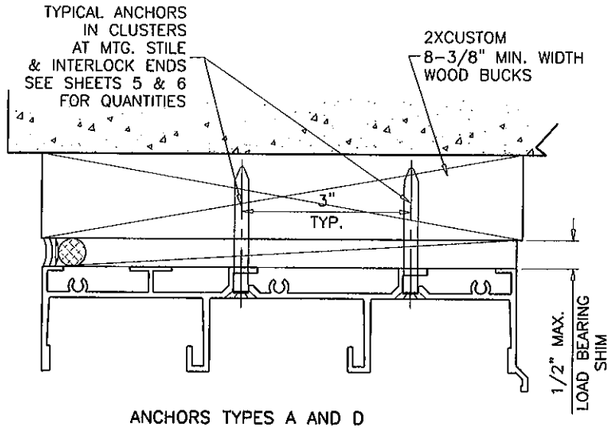

ANCHORS TYPES A AND D
INTO 2BY WOOD BUCKS
OR WOOD STRUCTURES

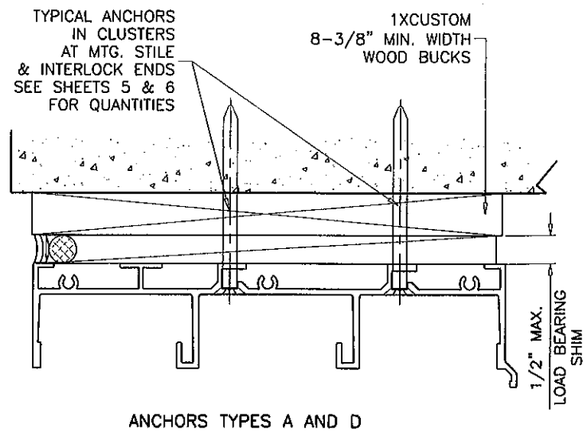

ANCHORS TYPES A AND D
THRU 1BY WOOD BUCKS
INTO 3 KSI CONCRETE

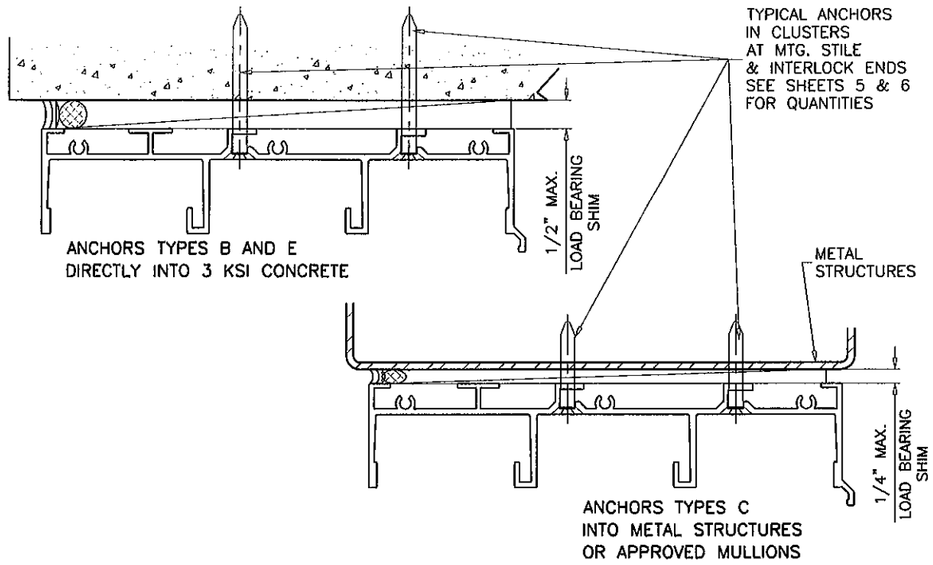

ANCHORS TYPES B AND E
DIRECTLY INTO 3 KSI CONCRETE

ANCHORS TYPES C
INTO METAL STRUCTURES
OR APPROVED MULLIONS

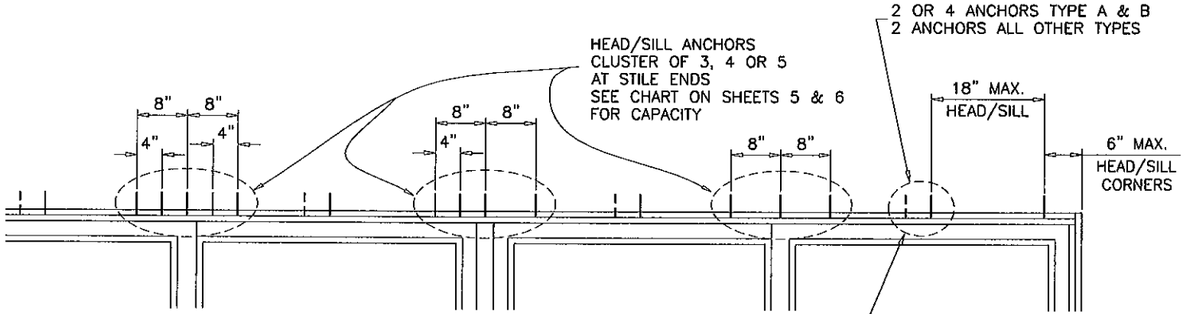

INTERMEDIATE HEAD ANCHORS
USE TYPICAL ANCHOR SPACING
(2) ANCHORS IN PAIR
LIMIT LOADS TO 80 PSF FOR TYPES A & B
LIMIT LOADS TO 170 PSF FOR ALL OTHER TYPES
(4) ANCHORS IN CLUSTER
LIMIT LOADS TO 170 PSF FOR TYPES A & B

ANCHORS TYPES B & E
DIRECTLY INTO 3 KSI CONCRETE

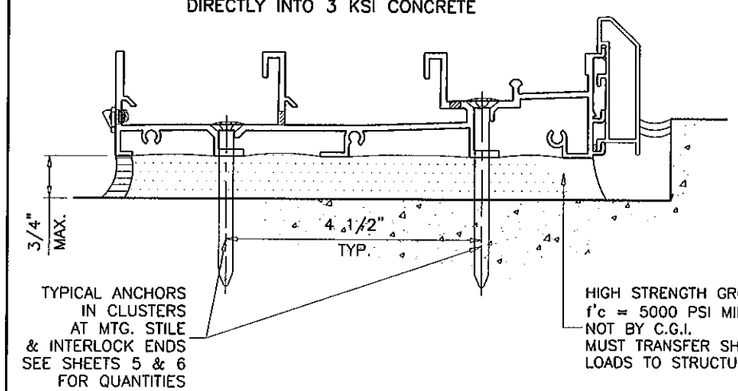

TYPICAL ANCHORS
IN CLUSTERS
AT MTG. STILE
& INTERLOCK ENDS
SEE SHEETS 5 & 6
FOR QUANTITIES

HIGH STRENGTH GROUT
f'c = 5000 PSI MIN.
NOT BY C.G.I.
MUST TRANSFER SHEAR
LOADS TO STRUCTURE

TYPICAL ANCHORS: SEE ELEV. FOR SPACING

TYPE 'A' – 1/4" DIA ULTRACON BY 'ELCO' (Fu=177 KSI, Fy=155 KSI)
INTO 2BY WOOD BUCKS OR WOOD STRUCTURES
WITH 1-1/2" MIN. PENETRATION INTO WOOD

THRU 1BY WOOD BUCKS INTO CONCRETE
WITH 1-1/4" MIN. EMBED INTO CONCRETE

TYPE 'B' – 1/4" DIA ULTRACON BY 'ELCO' (Fu=177 KSI, Fy=155 KSI)
DIRECTLY INTO CONCRETE
WITH 1-3/4" MIN. EMBED INTO CONC.

TYPE 'C' – #14 SMS OR SELF DRILLING SCREWS ST/ST (GRADE 2 CRS)
INTO METAL STRUCTURES

STEEL : 12 GA. MIN. (Fy = 36 KSI MIN.)
ALUMINUM : 1/8" THK. MIN. (6063-T5 MIN.)
(STEEL IN CONTACT WITH ALUMINUM TO BE PLATED OR PAINTED)

TYPE 'D' – 1/4" DIA HILTI KWIK-CON II (Fu=163 KSI, Fy=157 KSI)
INTO 2BY WOOD BUCKS OR WOOD STRUCTURES
WITH 1-3/8" MIN. PENETRATION INTO WOOD

THRU 1BY WOOD BUCKS INTO CONCRETE
WITH 1-1/4" MIN. EMBED INTO CONCRETE

TYPE 'E' – 1/4" DIA HILTI KWIK-CON II (Fu=163 KSI, Fy=157 KSI)
DIRECTLY INTO CONCRETE
WITH 1-1/4" MIN. EMBED INTO CONC.

ANCHOR EDGE DISTANCES

INTO CONCRETE AND MASONRY = 2-1/2" MIN. AT 1/4" ANCHOR
INTO WOOD STRUCTURE = 1" MIN.
INTO METAL STRUCTURE = 1/2" MIN.

WOOD BUCKS AND METAL STRUCTURES NOT BY CGI WINDOWS
MUST SUSTAIN LOADS IMPOSED BY GLAZING SYSTEM AND
TRANSFER THEM TO THE BUILDING STRUCTURE.

Engr: JAVAD AHMAD
CIVIL
FLA. PE # 70592
C.A.N. 3538

JUL 25 2012

PRODUCT REVISED
as complying with the Florida
Building Code
Acceptance No. 12-0411.05
Expiration Date 6/12/2013
By
Miami Dade Product Control

AL-FAROOQ CORPORATION
ENGINEERS & PRODUCT DEVELOPMENT
1235 S.W. 87 AVE
MIAMI, FLORIDA 33174
TEL. (305) 264-8100 FAX. (305) 262-6978

COMP-ANL\W09-58CGI

SERIES-560 ALUM SLIDING GLASS DOOR (L.M.I.)

CGI WINDOWS & DOORS
10100 N.W. 25TH STREET
MIAMI, FL. 33172
TEL. (305) 593-6590 FAX. (305) 593-6592

revisions:			
no	date	by	description
A	03.23.12		UPDATED TO 2010 FBC

date: 11-10-09
scale: 3/8" = 1"
dr. by: HAMID
chk. by:

drawing no.
W09-58

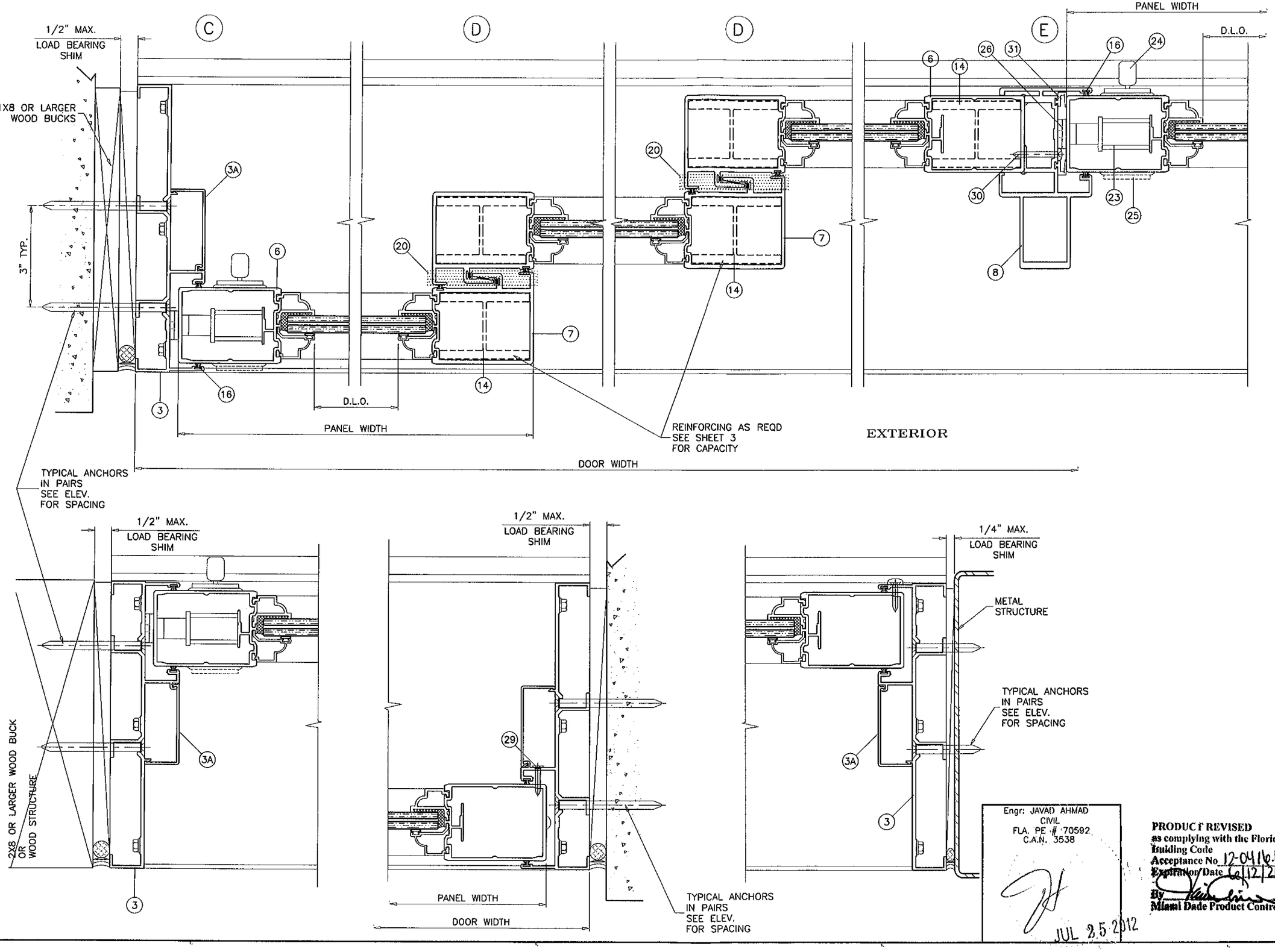

Engr: JAVAD AHMAD
CIVIL
FLA. PE # 70592
C.A.N. 3538

JUL 25 2012

PRODUCT REVISED
as complying with the Florida
Building Code
Acceptance No. 12-0416.06
Expiration Date 6/12/2017
By
Miami Dade Product Control

AL-FAROOQ CORPORATION
ENGINEERS & PRODUCT DEVELOPMENT
1235 S.W. 87 AVE
MIAMI, FLORIDA 33174
TEL. (305) 264-8100 FAX. (305) 262-6978

COMP-ANL\W09-58CGI

SERIES-560 ALUM SLIDING GLASS DOOR (L.M.I.)

CGI WINDOWS & DOORS
10100 N.W. 25TH STREET
MIAMI, FL. 33172
TEL. (305) 593-6590 FAX. (305) 593-6592

revisions:

no	date	by	description
A	03.23.12		NO CHANGE THIS SHEET

date: 11-10-09
scale: 3/8" = 1"
dr. by: HAMID
chk. by:

drawing no.
W09-58

sheet 9 of 13

POCKET HOOK ANCHOR CAPACITY - PSF

ANCHORS TYPE	SUBSTRATE	MIN. EMBED.	MIN. EDGE DIST.	PANEL WIDTHS				
				36-1/4"	42-1/4"	48-1/4"	54-1/4"	60-1/4"
1/4" DIA. ULTRACONS BY 'ELCO' (Fu=177 KSI, Fy=155 KSI)	MASONRY	1-1/4"	1"	99.0	85.0	75.0	66.0	60.0
	CONCRETE	1-3/4"	1"	170.0	159.0	139.0	124.0	112.0
1/4" DIA. KWIK-CON II BY 'HILTI' (Fu=163 KSI, Fy=157 KSI)	MASONRY	1-1/4"	1"	83.0	71.0	62.0	55.0	50.0
	CONCRETE	1-3/4"	1"	140.0	120.0	105.0	94.0	84.0
#14 SMS (GRADE 2 CRS)	WOOD	1-1/2"	3/4"	170.0	170.0	150.0	133.0	120.0

ABOVE CHART IS FOR 12" TYP. ANCHOR SPACING
FOR 6" SPACING MULTIPLY CAPACITY X2.

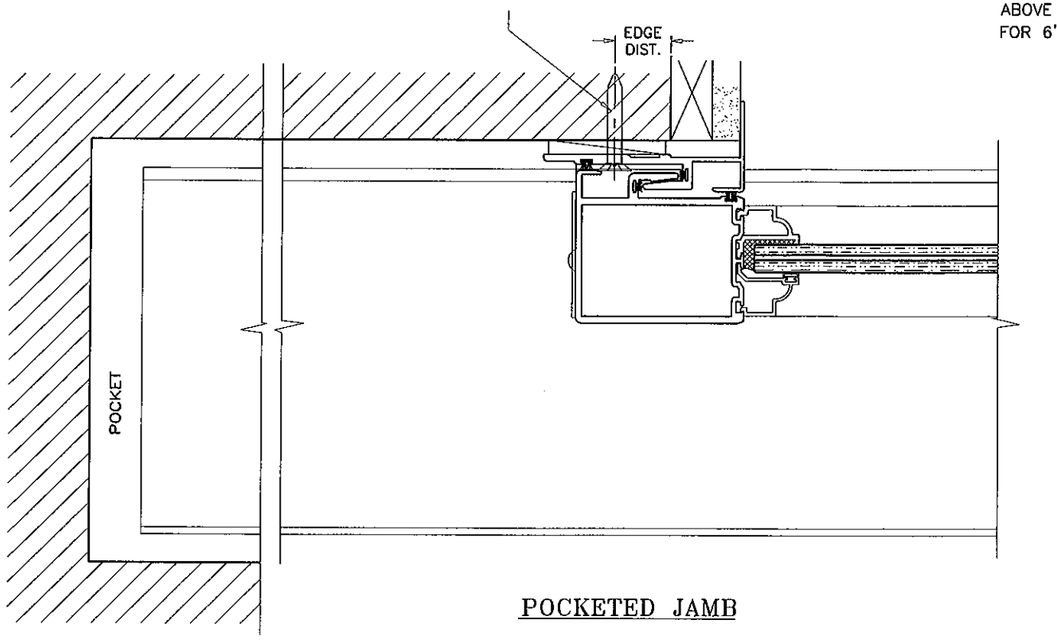

POCKETED JAMB

PRODUCT REVISED
as complying with the Florida Building Code
Acceptance No 12-0416.05
Expiration Date 6/12/2017
By
Miami Dade Product Control

Engr: JAVAD AHMAD
CIVIL
FLA. PE # 70592
C.A.N. 3538

JUL 25 2012

AL-FAROOQ CORPORATION
ENGINEERS & PRODUCT DEVELOPMENT
1235 S.W. 87 AVE
MIAMI, FLORIDA 33174
TEL. (305) 264-8100 FAX. (305) 262-6978

COMP-ANL\W09-58CGI

SERIES-560 ALUM SLIDING GLASS DOOR (L.M.I.)

CGI WINDOWS & DOORS
10100 N.W. 25TH STREET
MIAMI, FL. 33172
TEL. (305) 593-6590 FAX. (305) 593-6592

revisions:

no	date	by	description
A	03.23.12		NO CHANGE THIS SHEET

date: 11-10-09
scale: 3/8" = 1"
dr. by: HAMID
chk. by:

drawing no.
W09-58

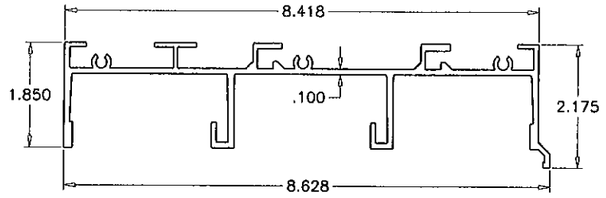

(1) FRAME HEAD

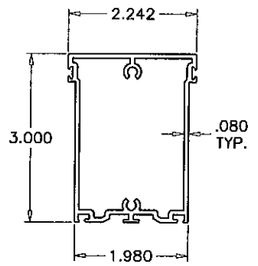

(4) TOP RAIL

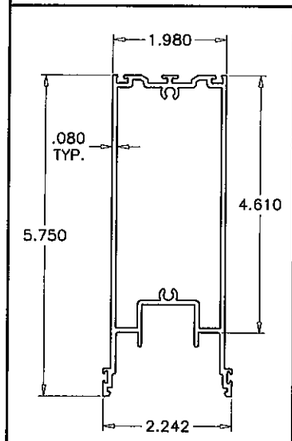

(5) BOTTOM RAIL

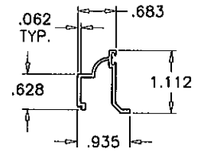

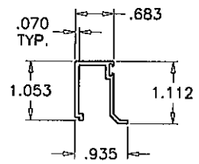

(10) (10A) GLAZING BEADS

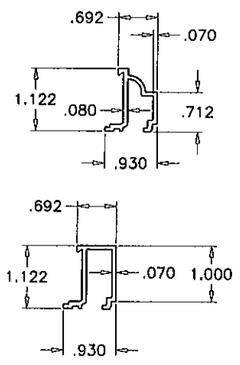

(11) (11A) GLASS ADAPTERS

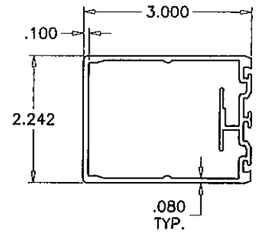

(6) JAMB/LOCK STILE

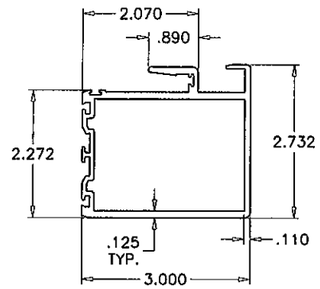

(7) INTERLOCK STILE

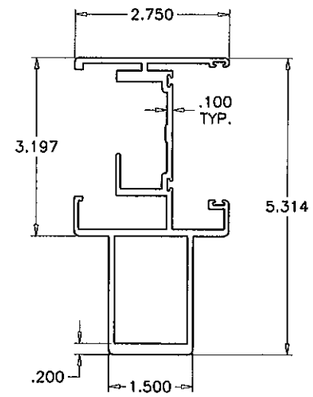

(8) ASTRAGAL STILE

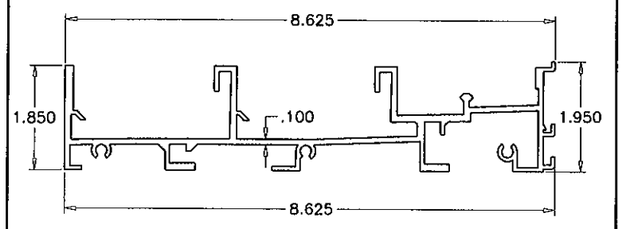

(2) FRAME SILL

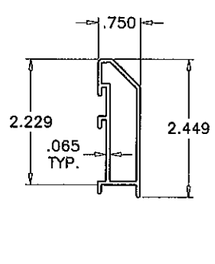

(9) SILL RISER (STANDARD)

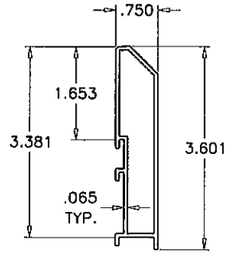

(9A) SILL RISER (HI-RISE)

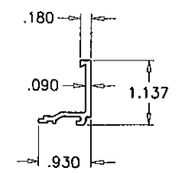

(12) INSUL. GLASS ADAPTER

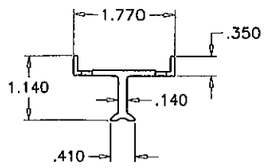

(13) FIX. PANEL BASE

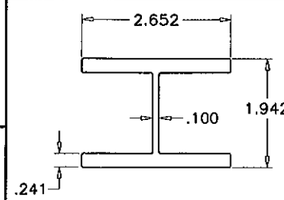

(14) STILE REINFORCING

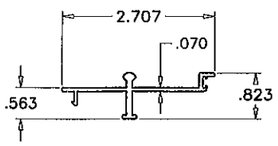

(16) TRACK INSERT

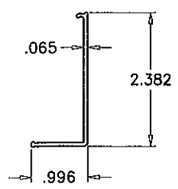

(17) JAMB COVER

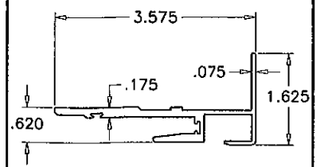

(15) POCKET DOOR HOOK

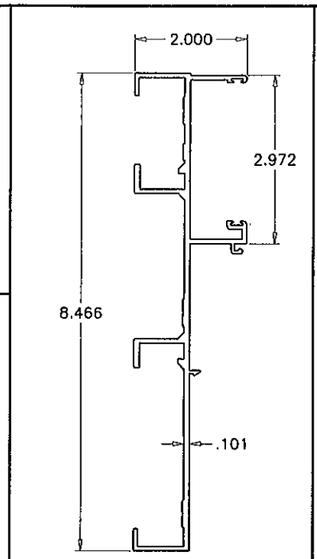

(3A) FRAME JAMB

Engr: JAVAD AHMAD
CIVIL
FLA. PE # 70592
C.A.N. 3538

JUL 25 2012

PRODUCT REVISED
as complying with the Florida Building Code
Acceptance No 12-0411.06
Expiration Date 6/12/2017
By
Miami Dade Product Control

AL-FAROOQ CORPORATION
ENGINEERS & PRODUCT DEVELOPMENT
1235 S.W. 87 AVE
MIAMI, FLORIDA 33174
TEL. (305) 264-8100 FAX. (305) 262-6978

COMP-ANL\W09-58CGI

SERIES-560 ALUM SLIDING GLASS DOOR (L.M.I.)

CGI WINDOWS & DOORS
10100 N.W. 25TH STREET
MIAMI, FL. 33172
TEL. (305) 593-6590 FAX. (305) 593-6592

revisions:		
no	date	by description
A	03.23.12	NO CHANGE THIS SHEET

date: 11-10-09
scale: 3/8" = 1"
dr. by: HAMID
chk. by:

drawing no.
W09-58

sheet 10 of 13

ITEM #	PART #	QUANTITY	DESCRIPTION	MATERIAL	MANF./SUPPLIER/REMARKS
1	CGI-572	1	FRAME HEAD	6063-T6	-
2	CGI-573	1	FRAME SILL	6063-T6	-
2A	CGI-575	AS REQD.	TRACK INSERT	6063-T6	-
3	CGI-574	2	FRAME JAMB	6063-T6	-
3A	CGI-576	AS REQD.	JAMB COVER	6063-T5	-
4	CGI-555	1/ PANEL	TOP RAIL	6063-T6	-
5	CGI-556	1/ PANEL	BOTTOM RAIL	6063-T6	-
6	CGI-557	2/ PANEL	JAMB/LOCK STILE	6063-T6	-
7	CGI-558	AS REQD.	INTERLOCK	6063-T6	-
8	CGI-559	AS REQD.	ASTRAGAL STILE	6063-T6	-
9	CGI-553	AS REQD.	SILL RISER (STANDARD)	6063-T5	-
9A	CGI-553	AS REQD.	SILL RISER (HI-RISE)	6063-T5	-
10	CGI-561	AS REQD.	GLAZING BEAD (COLONIAL)	6063-T5	-
10A	CGI-563	AS REQD.	GLAZING BEAD (SQUARE)	6063-T5	-
11	CGI-562	AS REQD.	GLASS ADAPTER (COLONIAL)	6063-T5	-
11A	CGI-564	AS REQD.	GLASS ADAPTER (SQUARE)	6063-T5	-
12	CGI-565	AS REQD.	GLASS ADAPTER (INSUL. LAM. GLASS)	6063-T6	-
13	CGI-585	2/ FIX. PANEL	FIX. PANEL BASE, 2" LONG	6063-T5	ATTACHED WITH #8 X 3/4" PH PH TEKS
14	CGI-560	AS REQD.	STILE REINFORCING	6063-T6	LENGTH = DOOR HT. - 14"
15	CGI-577	AS REQD.	POCKET DOOR HOOK	6063-T6	-

16	VARIES	VARIES	WOOL PILE WEATHERSTRIPPING WITH FIN	PILE	ULTRAFAB OR EQUAL	.187 BASE X .290 TRI-FIN (USED HORIZONTALLY) .187 BASE X .290 SINGLE CENTER FIN (USED VERTICALLY)
17	CGI-382V	VARIES	GLAZING BEAD BULB	VINYL	CUSTOM EXTRUDED	
18	SILICONE	VARIES	STRUCTURAL SILICONE	RUBBER	GE 1200 OR DOW 995	
19	CGI-584	1	ANTI-LIFT BLOCK	GL REINF NYLON	CUSTOM CGI PART	ABOVE INTERLOCK ATTACHED W/ (2) #10X1" SMS
20	CGI-586	1	ADHESIVE BACKED PILE PAD (.300" HIGH)	PILE	ULTRAFAB OR EQUAL	AT BOTTOM OF EACH INTERLOCK
21	TA-51 OR TA-84	2/ MOV. PANEL	TANDEM S/S ROLLER	S/S	BUILDERS HRDW. OR EQUAL	ATTACHED WITH #8 X 3/4" PH PH TEKS
23	CH-200	1	M.S. COMMERCIAL HOOK BOLT LOCK	S/S MECH.	CUSTOM PART	INCLUDES CGI-580 FACE PLATE TRIM
24	CH-107	1	BRASS THUMBTURN	BRASS/ZINC	CUSTOM PART	1 REQUIRED PER HOOK BOLT
25	CH-109	OPT.	BRASS KEYED EXTERIOR CYLINDER	BRASS/ZINC	CUSTOM PART	OPTIONAL PART
26	CGI-581	1	.850 X 3.875 S/S KEEPER	S/S	CUSTOM PART	ATTACHED W/ (3) #10 X 1" TRUSS HEAD SMS
27	SCREW (FRAME)	12	#12 X 1 1/4" HEX HEAD S/S SMS	S/S	VARIOUS	3 SCREWS PER FRAME CORNER
28	SCREW (PANEL)	8	#10 X 1 1/4" PAN HEAD S/S SMS	S/S	VARIOUS	2 SCREWS PER PANEL CORNER
29	SCREW	2	#8 X 1 1/2" FLAT HEAD TEKS S/S	S/S	VARIOUS	(2) PER FIXED PANEL AT MAXIMUM OF 24" FROM TOP & BOTTOM MOUNTED ON PLASTIC COVER
30	SCREW	VARIES	#10 X 1 1/2" PAN HEAD TEKS S/S	S/S	VARIOUS	AT 6" FROM ENDS AND 24" ON CENTER MAX.
31	CGI-599	VARIES	RUBBER SEAL	RUBBER/FOAM	CUSTOM PART	
32	SIDELITE JAMB CLIP	1/SCREW	3" LONG CLIP (AT "O" CONFIGURATION)	ALUM	CUSTOM PART	CONSISTS OF 1/8 X 3 1/8 X 3" LG PLATE GLUED TO 3/4 X 1 1/2 X 1/8 THK X 3" LG. TUBE
33	HI-FLO WEEPER	VARIES	WEEP HOLE AND COVER	NYLON	PEP	1 WEEP AND COVER AT 9" FROM ENDS AND AT CENTER LINE OF INTERLOCK OR ASTRAGAL

SEALANTS:

ALL FRAME AND PANEL JOINT, INSTALLATION SCREWS AND HEADS OF ANCHOR SCREWS AT SILL TO BE SEALED WITH WHITE/ALUM COLORED SILICONE.

PRODUCT REVISED
as complying with the Florida Building Code
Acceptance No. 12-0416.05
Expiration Date 6/12/2017
By
Miami Dade Product Control

Engr: JAVAD AHMAD
CIVIL
FLA. PE # 70592
C.A.N. 3538

JUL 25 2012

AL-FAROOQ CORPORATION
ENGINEERS & PRODUCT DEVELOPMENT
1235 S.W. 87 AVE
MIAMI, FLORIDA 33174
TEL. (305) 264-8100 FAX. (305) 262-6978

COMP-ANL\W09-58CGI

SERIES-560 ALUM SLIDING GLASS DOOR (L.M.I.)

CGI WINDOWS & DOORS
10100 N.W. 25TH STREET
MIAMI, FL. 33172
TEL. (305) 593-6590 FAX. (305) 593-6592

revisions:

no	date	by	description
A	03.23.12		NO CHANGE THIS SHEET

date: 11-10-09
scale: 3/8" = 1"
dr. by: HAMID
chk. by:

drawing no. W09-58

sheet 11 of 13

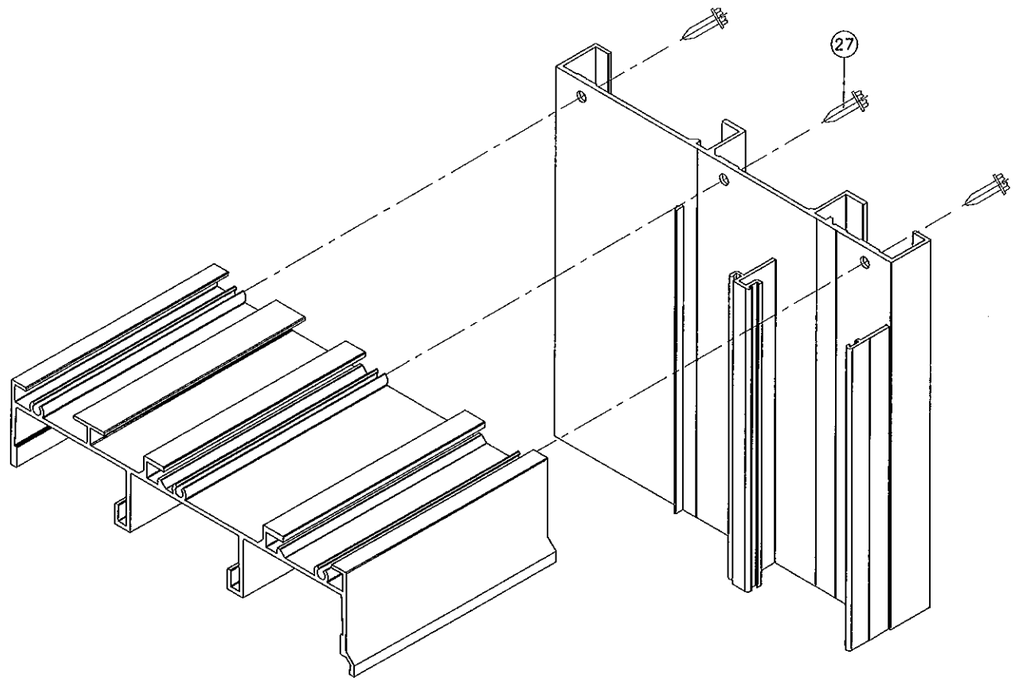

FRAME TOP CORNER

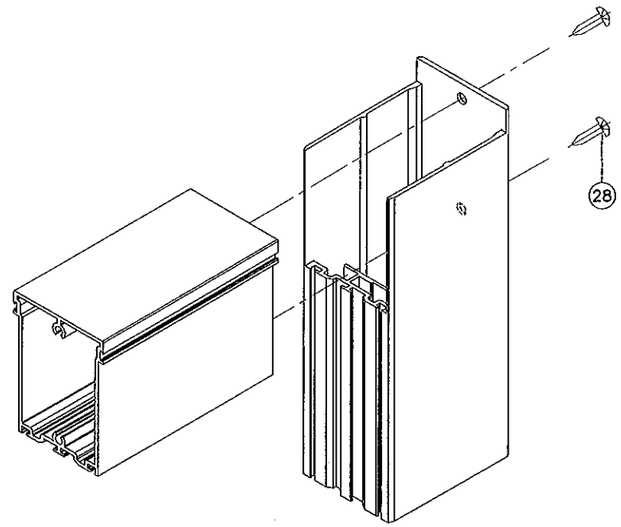

PANEL TOP CORNER

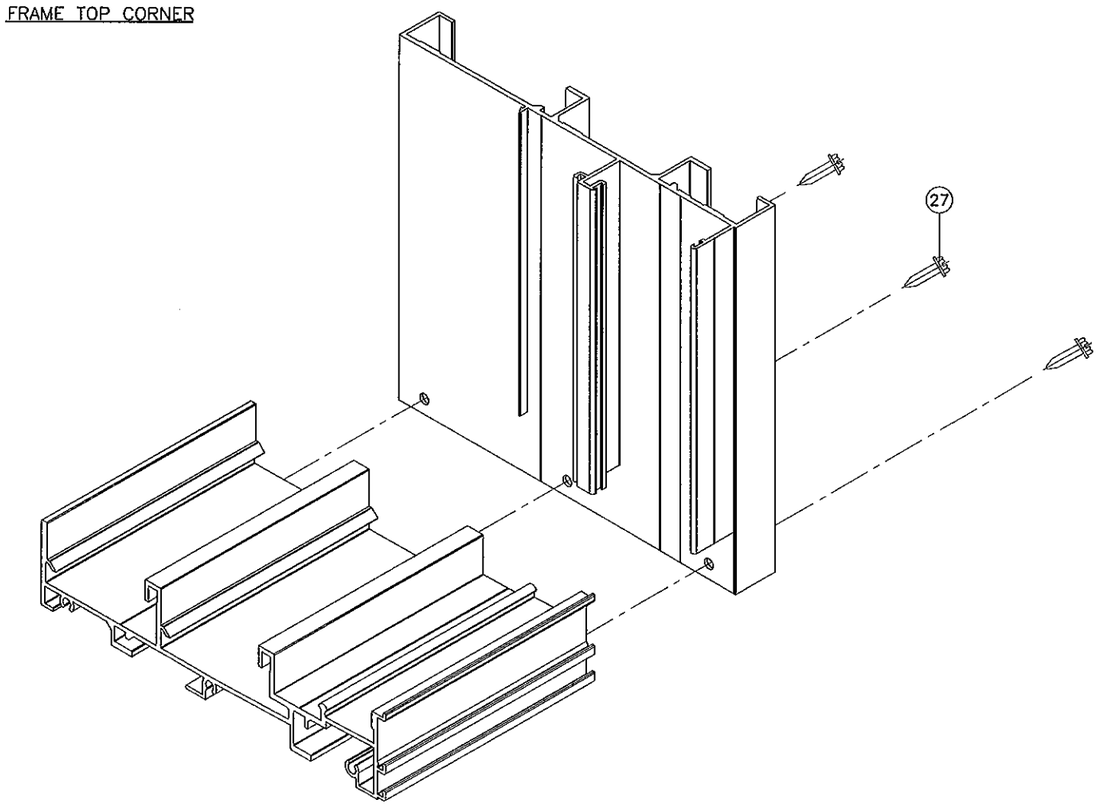

FRAME BOTTOM CORNER

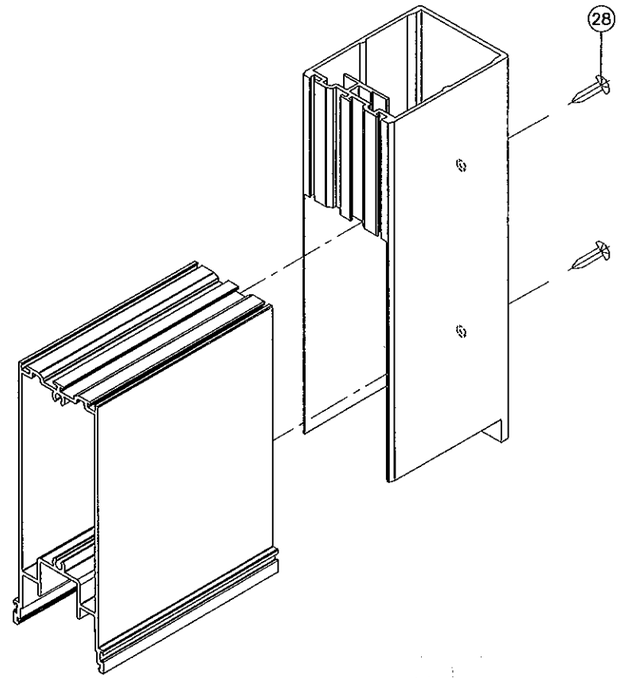

PANEL BOTTOM CORNER

Engr: JAVAD AHMAD
CIVIL
FLA. PE # 70592
C.A.N. 3538

JUL 25 2012

PRODUCT REVISED
as complying with the Florida Building Code
Acceptance No 12-0416.06
Expiration Date 6/12/2017
By
Miami Dade Product Control

AL-FAROOQ CORPORATION
ENGINEERS & PRODUCT DEVELOPMENT
1235 S.W. 87 AVE
MIAMI, FLORIDA 33174
TEL. (305) 264-8100 FAX. (305) 262-6978
COMP-ANL\W09-58CGI

SERIES-560 ALUM SLIDING GLASS DOOR (L.M.I.)

CGI WINDOWS & DOORS
10100 N.W. 25TH STREET
MIAMI, FL. 33172
TEL. (305) 593-6592 FAX. (305) 593-6590

revisions:

no	date	by	description
A	03.23.12		NO CHANGE THIS SHEET

date: 11-10-09
scale: 3/8" = 1"
dr. by: HAMID
chk. by:

drawing no.
W09-58

sheet 12 of 13

MULLION LOAD CAPACITY - PSF		
DIMS.		2 X 10 X 1/8"
WIDTH (W) INCHES	LENGTH (L) INCHES	EXT.(+) INT.(-)
26-1/4	84	140.0
32-1/4		140.0
38-1/4		140.0
44-1/4		140.0
50-1/4		140.0
56-1/4		140.0
62-1/4		140.0
26-1/4	90	140.0
32-1/4		140.0
38-1/4		140.0
44-1/4		140.0
50-1/4		140.0
56-1/4		140.0
62-1/4		140.0
26-1/4	96	140.0
32-1/4		140.0
38-1/4		140.0
44-1/4		140.0
50-1/4		140.0
56-1/4		140.0
62-1/4		140.0
26-1/4	102	140.0
32-1/4		140.0
38-1/4		140.0
44-1/4		140.0
50-1/4		140.0
56-1/4		140.0
62-1/4		140.0
26-1/4	108	140.0
32-1/4		140.0
38-1/4		140.0
44-1/4		140.0
50-1/4		140.0
56-1/4		140.0
62-1/4		140.0
26-1/4	114	140.0
32-1/4		140.0
38-1/4		140.0
44-1/4		140.0
50-1/4		140.0
56-1/4		140.0
26-1/4	120	140.0
32-1/4		140.0
38-1/4		140.0
44-1/4		140.0
50-1/4		140.0
56-1/4		140.0

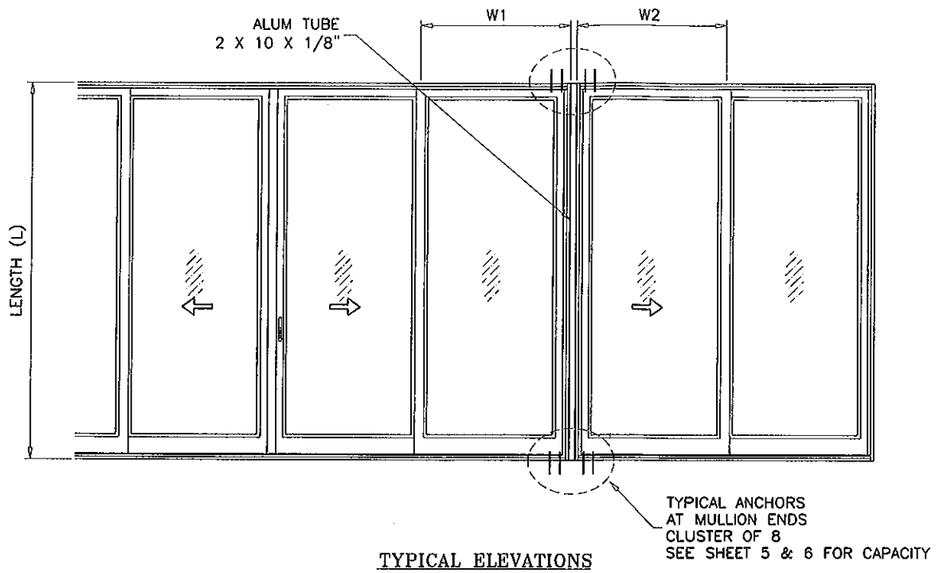

TYPICAL ELEVATIONS

SIDE BY SIDE S.G. DOOR

SIDE BY SIDE APPLIES TO TWO OR MORE DOORS

$$\text{WIDTH (W)} = \frac{W1 + W2}{2} + 2$$

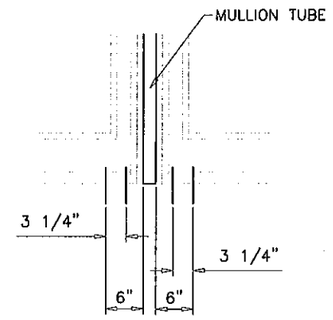

CLUSTER OF 8 ANCHORS

READ VALUES FOR CLUSTER OF 8 ANCHORS ON SHEETS 5 & 6.

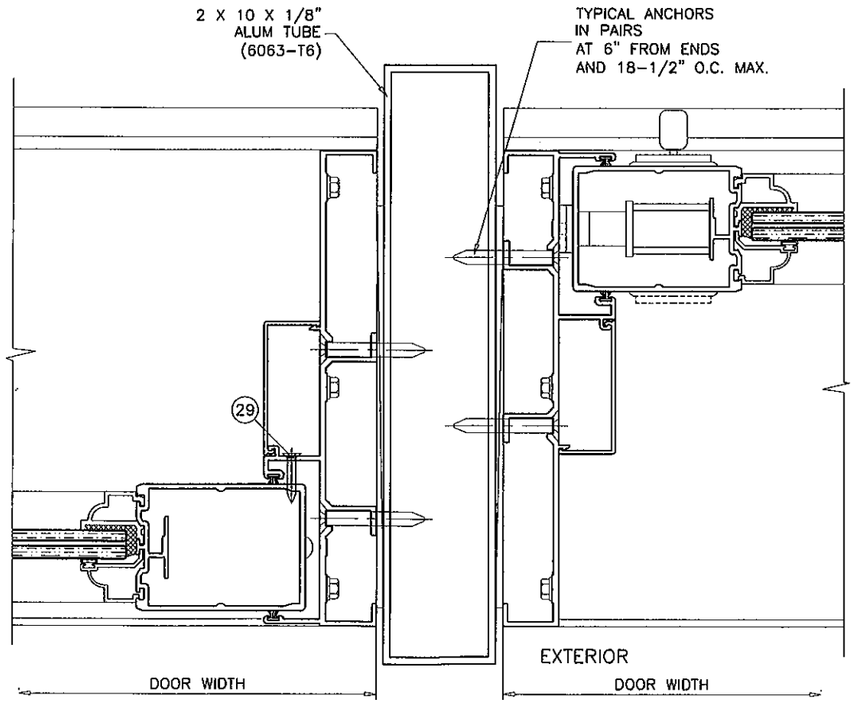

UNCLIPPED MULLION

NOTES:

1. USE CHART ON THIS SHEET FOR SIDE BY SIDE CONNECTION CAPACITY OF DOOR MULLION.
2. FOR SLIDING GLASS DOOR CAPACITY SEE SHEET 3.
3. USE CHART ON SHEETS 5 & 6 TO SELECT ANCHOR ARRANGEMENT AT MULLION ENDS.
4. LOWER VALUES FROM STEPS 1, 2 OR 3 WILL APPLY TO ENTIRE SYSTEM.

Engr: JAVAD AHMAD
CIVIL
FLA. PE # 70592
C.A.N. 3538

JUL 25 2012

PRODUCT REVISED
as complying with the Florida Building Code
Acceptance No 12-0416.05
Expiration Date 6/12/2017
By
Miami Dade Product Control

AL-FAROOQ CORPORATION
ENGINEERS & PRODUCT DEVELOPMENT
1235 S.W. 87 AVE
MIAMI, FLORIDA 33174
TEL. (305) 264-8100 FAX. (305) 262-6978

COMP-ANL\W09-58CGI

SERIES-560 ALUM SLIDING GLASS DOOR (L.M.I.)

CGI WINDOWS & DOORS
10100 N.W. 25TH STREET
MIAMI, FL. 33172
TEL. (305) 593-6590 FAX. (305) 593-6592

revisions:

no	date	by	description
A	03.23.12		NO CHANGE THIS SHEET

date: 11-10-09
scale: 3/8" = 1"
dr. by: HAMID
chk. by:

drawing no. W09-58