MIAMI-DADE COUNTY
DEPARTMENT OF PERMITTING, ENVIRONMENT, AND REGULATORY AFFAIRS (PERA)
BOARD AND CODE ADMINISTRATION DIVISION

# NOTICE OF ACCEPTANCE (NOA)

MIAMI-DADE COUNTY
PRODUCT CONTROL SECTION
11805 SW 26 Street, Room 208
Miami, Florida 33175-2474
T (786) 315-2590 F (786) 315-2599
www.miamidade.gov/pera/

**T.M. Windows, LLC**
**601 NW 12th Ave.**
**Pompano Beach, FL 33069**

**SCOPE:**

This NOA is being issued under the applicable rules and regulations governing the use of construction materials. The documentation submitted has been reviewed and accepted by Miami-Dade County PERA -Product Control Section to be used in Miami Dade County and other areas where allowed by the Authority Having Jurisdiction (AHJ).

This NOA shall not be valid after the expiration date stated below. The Miami-Dade County Product Control Section (In Miami Dade County) and/or the AHJ (in areas other than Miami Dade County) reserve the right to have this product or material tested for quality assurance purposes. If this product or material fails to perform in the accepted manner, the manufacturer will incur the expense of such testing and the AHJ may immediately revoke, modify, or suspend the use of such product or material within their jurisdiction. PERA reserves the right to revoke this acceptance, if it is determined by Miami-Dade County Product Control Section that this product or material fails to meet the requirements of the applicable building code.

This product is approved as described herein, and has been designed to comply with the Florida Building Code, including the High Velocity Hurricane Zone.

**DESCRIPTION: Series "350" Aluminum Sliding Glass Door (Reinforced) – N.I.**

**APPROVAL DOCUMENT:** Drawing No. **W02-115,** titled "Series 350-Alum. Sliding Glass Door (N.I.)", sheets 1 through 7 of 7, dated 12/02/02, with revision **C** dated 03/12/12, prepared by Al-Farooq Corporation, signed and sealed by Javad Ahmad, P.E., bearing the Miami-Dade County Product Control Revision stamp with the Notice of Acceptance number and expiration date by the Miami-Dade County Product Control Section.

**MISSILE IMPACT RATING: None**

**LABELING:** Each unit shall bear a permanent label with the manufacturer's name or logo, city, state and series and following statement: "Miami-Dade County Product Control Approved", noted herein.

**RENEWAL** of this NOA shall be considered after a renewal application has been filed and there has been no change in the applicable building code negatively affecting the performance of this product.

**TERMINATION** of this NOA will occur after the expiration date or if there has been a revision or change in the materials, use, and/or manufacture of the product or process. Misuse of this NOA as an endorsement of any product, for sales, advertising or any other purposes shall automatically terminate this NOA. Failure to comply with any section of this NOA shall be cause for termination and removal of NOA.

**ADVERTISEMENT:** The NOA number preceded by the words Miami-Dade County, Florida, and followed by the expiration date may be displayed in advertising literature. If any portion of the NOA is displayed, then it shall be done in its entirety.

**INSPECTION:** A copy of this entire NOA shall be provided to the user by the manufacturer or its distributors and shall be available for inspection at the job site at the request of the Building Official.

This NOA **revises NOA # 06-1016.01** and consists of this page 1 and evidence pages E-1 and E-2, as well as approval document mentioned above.

The submitted documentation was reviewed by **Jaime D. Gascon, P.E.**

MIAMI-DADE COUNTY APPROVED

J. GASCON
7/17/12

# NOTICE OF ACCEPTANCE: EVIDENCE SUBMITTED

## A. DRAWINGS

1. Manufacturer's die drawings and sections (Submitted under file # **06-1016.01**)
2. Drawing No. **W02-115,** titled "Series 350-Alum. Sliding Glass Door (N.I.)", sheets 1 through 7 of 7, dated 12/02/02, with revision **C** dated 03/12/12, prepared by Al-Farooq Corporation, signed and sealed by Javad Ahmad, P.E.

## B. TESTS (Submitted under file # 06-1016.01)

1. Test reports on
   1) Air Infiltration Test, per FBC, TAS 202-94
   2) Uniform Static Air Pressure Test, Loading per FBC TAS 202-94
   3) Water Resistance Test, per FBC, TAS 202-94
   4) Large Missile Impact Test per FBC, TAS 201-94
   5) Cyclic Wind Pressure Loading per FBC, TAS 203-94
   6) Forced Entry Test, per FBC 2411 3.2.1, TAS 202-94

   along with installation diagram prepared by Fenestration Testing Laboratory, Inc., Test Report No.**FTL-3088** dated 11/19/01, signed and sealed by Luis A. Figueredo, P.E.

2. Test reports on
   1) Air Infiltration Test, per FBC, TAS 202-94
   2) Uniform Static Air Pressure Test, Loading per FBC TAS 202-94
   3) Water Resistance Test, per FBC, TAS 202-94
   4) Large Missile Impact Test per FBC, TAS 201-94
   5) Cyclic Wind Pressure Loading per FBC, TAS 203-94
   6) Forced Entry Test, per FBC 2411 3.2.1, TAS 202-94

   along with installation diagram prepared by Fenestration Testing Laboratory, Inc., Test Report No.**FTL-2976** dated 03/02/01, signed and sealed by Antonio Acevedo, P.E.

3. Test reports on
   1) Air Infiltration Test, per FBC, TAS 202-94
   2) Uniform Static Air Pressure Test, Loading per FBC TAS 202-94
   3) Water Resistance Test, per FBC, TAS 202-94
   4) Large Missile Impact Test per FBC, TAS 201-94
   5) Cyclic Wind Pressure Loading per FBC, TAS 203-94
   6) Forced Entry Test, per FBC 2411 3.2.1, TAS 202-94

   along with installation diagram prepared by Fenestration Testing Laboratory, Inc., Test Report No.**FTL-2771** dated 01/15/01, signed and sealed by Antonio Acevedo, P.E.

## C. CALCULATIONS

1. Anchor verification calculations and structural analysis, complying with FBC-2010, prepared by Al Farooq Corporation, dated 04/18/12, signed and sealed by Javad Ahmad, P.E.
2. Glazing complies w/ ASTME-1300-02 & -04

## D. QUALITY ASSURANCE

1. Miami Dade Department of Permitting, Environment, and Regulatory Affairs (PERA).

## E. MATERIAL CERTIFICATIONS

1. None.

**Jaime D. Gascon, P.E.**
**Product Control Section Supervisor**
**NOA No 12-0507.05**
**Expiration Date: January 23, 2013**
**Approval Date: July 26, 2012**

## NOTICE OF ACCEPTANCE: EVIDENCE SUBMITTED

**F. STATEMENTS**

1. Statement letter of conformance to FBC 2010 and letter of no financial interest, prepared by Al Farooq Corporation, dated 04/18/12, signed and sealed by Javad Ahmad, P.E.

**G. OTHER**

1. Technical data sheet for PVC gasket #1348 with GG-75 raw material by American Vinyl Company.
2. Notice of Acceptance No. 06-1016.01, issued to T.M. Window & Door Co. for their Series "**350 Aluminum Sliding Glass Door (Reinforced) – N.I.**", approved on 04/26/07 and expiring on 01/23/13.

**Jaime D. Gascon, P.E.**
**Product Control Section Supervisor**
**NOA No 12-0507.05**
**Expiration Date: January 23, 2013**
**Approval Date: July 26, 2012**

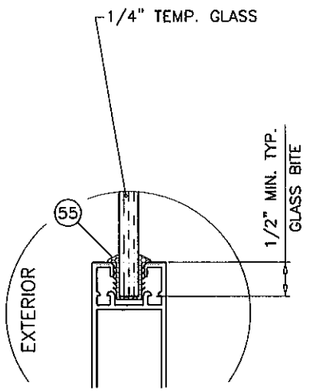


GLAZING DETAIL

DOORS NOT RATED FOR IMPACT.
INSTALLATION OF THIS PRODUCT IN THE HVHZ AREA REQUIRES THE USE OF APPROVED SHUTTERS OR EXTERNAL PROTECTION DEVICES COMPLYING WITH HVHZ REQUIREMENTS.
INSTALLATION OF THIS SYSTEM OUTSIDE THE HVHZ AREA SHALL MEET THE APPLICABLE REQUIREMENTS FOR WIND BORNE DEBRIS PROTECTION.

## SERIES-350 ALUM. SLIDING GLASS DOOR

SEE CHARTS ON SHEETS 2 & 3 FOR DESIGN LOADS AND ANCHOR OPTIONS.

APPLICABLE EGRESS REQUIREMENTS PER FBC TO BE REVIEWED BY BUILDING OFFICIAL.

---

THIS PRODUCT HAS BEEN DESIGNED AND TESTED TO COMPLY WITH THE REQUIREMENTS OF THE FLORIDA BUILDING CODE INCLUDING HIGH VELOCITY HURRICANE ZONE (HVHZ).

1BY OR 2BY WOOD BUCKS BY OTHERS, MUST BE ANCHORED PROPERLY TO TRANSFER LOADS TO THE STRUCTURE.

ANCHORS SHALL BE AS LISTED, SPACED AS SHOWN ON DETAILS, ANCHORS EMBEDMENT TO BASE MATERIAL SHALL BE BEYOND WALL DRESSING OR STUCCO.

ANCHORING OR LOADING CONDITIONS NOT SHOWN IN THESE DETAILS ARE NOT PART OF THIS APPROVAL.

A LOAD DURATION INCREASE IS USED IN DESIGN OF ANCHORS INTO WOOD ONLY.

MATERIALS INCLUDING BUT NOT LIMITED TO STEEL/METAL SCREWS, THAT COME INTO CONTACT WITH OTHER DISSIMILAR MATERIALS SHALL MEET THE REQUIREMENTS OF THE FLORIDA BLDG. CODE SECTION 2003.8.4.

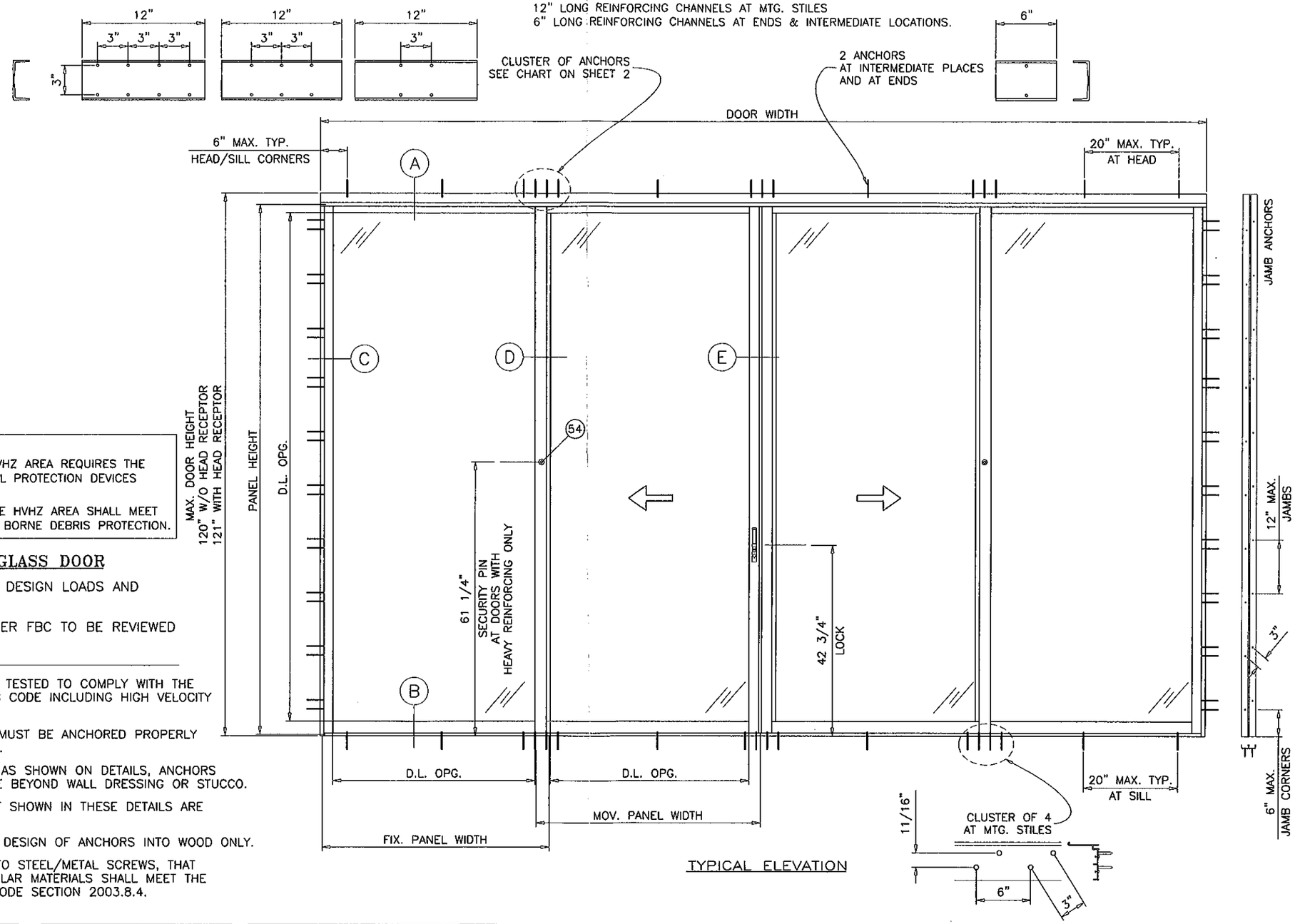


TYPICAL ELEVATION

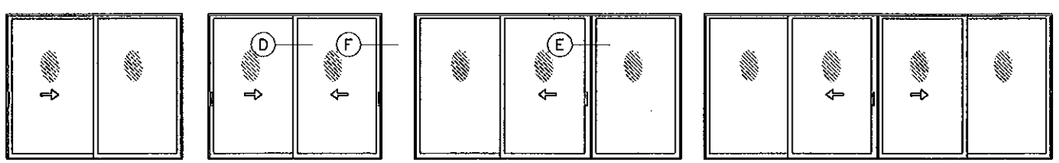


XO OR OX — XX — OXO — OXXO

APPROVED CONFIGURATIONS

THIS ALSO APPROVES DOORS WITH MORE THAN 4 PANELS THAT CONTAIN THE STILE COMBINATIONS SHOWN IN THESE DETAILS.

Engr: JAVAD AHMAD
CIVIL
FLA. PE # 70592
C.A.N. 3538

MAY 02 2012

PRODUCT REVISED
as complying with the Florida Building Code
Acceptance No 12-0507.05
Expiration Date 1/23/2013
By
Miami Dade Product Control


AL-FAROOQ CORPORATION
ENGINEERS & PRODUCT DEVELOPMENT
1235 S.W. 87 AVE
MIAMI, FLORIDA 33174
TEL. (305) 264-8100 FAX. (305) 262-6978


COMP-ANL\W02-115TMW

SERIES-350 ALUM. SLIDING GLASS DOOR (N.I.)


T.M. WINDOWS LLC.
601 N.W. 12TH AVE.
POMPANO BEACH, FL. 33069
TEL. (954) 781-5078 FAX. (954) 781-4430


revisions:

| no | date | by | description |
|---|---|---|---|
| A | 07.14.06 | | UPDATED FOR 2004 FBC |
| B | 03.16.07 | | REV. PER BCCO COMMENTS |
| C | 03.12.12 | | UPDATED TO 2010 FBC |

date: 12-02-02
scale: 1/2" = 1"
dr. by: HAMID
chk. by:

drawing no.
W02-115

sheet 1 of 7

## DESIGN LOAD CAPACITY – PSF
### DOORS W/O HEAD RECEPTOR

| PANEL WIDTH FT./IN. | DOOR HEIGHT FT./IN. | LIGHT REINF. | | MEDIUM REINFORCING | | | | HEAVY REINFORCING | | | | | |
|---|---|---|---|---|---|---|---|---|---|---|---|---|---|
| | | TYPE 'A' OR 'B' | | ANCHORS TYPE 'A' OR 'B' | | | | ANCHORS TYPE 'A' OR 'B' | | | | | |
| | | A4 OR B4 | | A4 OR B4 | | A6 OR B6 | | A4 OR B4 | | A6 OR B6 | | A8 OR B8 | |
| | | EXT.(+) | INT.(–) | EXT.(+) | INT.(–) | EXT.(+) | INT.(–) | EXT.(+) | INT.(–) | EXT.(+) | INT.(–) | EXT.(+) | INT.(–) |
| 2/0 | 6/8 | 100.0 | 132.7 | 100.0 | 132.7 | 100.0 | 199.1 | 100.0 | 132.7 | 100.0 | 199.1 | 100.0 | 210.0 |
| 2/6 | | 100.0 | 111.1 | 100.0 | 111.1 | 100.0 | 166.6 | 100.0 | 111.1 | 100.0 | 166.6 | 100.0 | 210.0 |
| 3/0 | | 97.0 | 97.0 | 97.0 | 97.0 | 100.0 | 145.5 | 97.0 | 97.0 | 100.0 | 145.5 | 100.0 | 194.0 |
| 3/6 | | 87.4 | 87.4 | 87.4 | 87.4 | 100.0 | 131.1 | 87.4 | 87.4 | 100.0 | 131.1 | 100.0 | 169.0 |
| 4/0 | | 80.6 | 80.6 | 80.6 | 80.6 | 100.0 | 120.9 | 80.6 | 80.6 | 100.0 | 120.9 | 100.0 | 160.8 |
| 4/6 | | 75.7 | 75.7 | 75.7 | 75.7 | 100.0 | 113.5 | 75.7 | 75.7 | 100.0 | 113.5 | 100.0 | 151.3 |
| 5/0 | | – | – | 72.2 | 72.2 | 100.0 | 108.3 | 72.2 | 72.2 | 100.0 | 108.3 | 100.0 | 144.4 |
| 2/0 | 8/0 | 100.0 | 107.4 | 100.0 | 107.4 | 100.0 | 161.1 | 100.0 | 107.4 | 100.0 | 161.1 | 100.0 | 210.0 |
| 2/6 | | 89.1 | 89.1 | 89.1 | 89.1 | 100.0 | 133.7 | 89.1 | 89.1 | 100.0 | 133.7 | 100.0 | 178.3 |
| 3/0 | | 77.1 | 77.1 | 77.1 | 77.1 | 100.0 | 115.7 | 77.1 | 77.1 | 100.0 | 115.7 | 100.0 | 154.3 |
| 3/6 | | 68.8 | 68.8 | 68.8 | 68.8 | 100.0 | 103.1 | 68.8 | 68.8 | 100.0 | 103.1 | 100.0 | 135.7 |
| 4/0 | | 62.7 | 62.7 | 62.7 | 62.7 | 94.0 | 94.0 | 62.7 | 62.7 | 94.0 | 94.0 | 100.0 | 123.9 |
| 4/6 | | – | – | 58.1 | 58.1 | 87.2 | 87.2 | 58.1 | 58.1 | 87.2 | 87.2 | 100.0 | 116.3 |
| 5/0 | | – | – | – | – | – | – | 54.7 | 54.7 | 82.0 | 82.0 | 100.0 | 109.4 |
| 2/0 | 9/0 | 87.2 | 87.2 | 94.0 | 94.0 | 100.0 | 141.0 | 94.0 | 94.0 | 100.0 | 141.0 | 100.0 | 188.0 |
| 2/6 | | 70.5 | 70.5 | 77.6 | 77.6 | 100.0 | 116.4 | 77.6 | 77.6 | 100.0 | 116.4 | 100.0 | 155.3 |
| 3/0 | | 59.6 | 59.6 | 66.8 | 66.8 | 100.0 | 100.3 | 66.8 | 66.8 | 100.0 | 100.3 | 100.0 | 133.7 |
| 3/6 | | 51.9 | 51.9 | 59.3 | 59.3 | 88.9 | 88.9 | 59.3 | 59.3 | 88.9 | 88.9 | 100.0 | 118.5 |
| 4/0 | | – | – | 53.7 | 53.7 | 80.6 | 80.6 | 53.7 | 53.7 | 80.6 | 80.6 | 100.0 | 107.0 |
| 4/6 | | – | – | – | – | – | – | 49.5 | 49.5 | 74.3 | 74.3 | 99.0 | 99.0 |
| 2/0 | 9/6 | 74.0 | 74.0 | 88.5 | 88.5 | 100.0 | 132.7 | 88.5 | 88.5 | 100.0 | 132.7 | 100.0 | 176.9 |
| 2/6 | | 59.7 | 59.7 | 72.9 | 72.9 | 100.0 | 109.4 | 72.9 | 72.9 | 100.0 | 109.4 | 100.0 | 145.8 |
| 3/0 | | 50.4 | 50.4 | 62.7 | 62.7 | 94.0 | 94.0 | 62.7 | 62.7 | 94.0 | 94.0 | 100.0 | 125.3 |
| 3/6 | | – | – | 55.4 | 55.4 | 83.2 | 83.2 | 55.4 | 55.4 | 83.2 | 83.2 | 100.0 | 110.9 |
| 4/0 | | – | – | – | – | – | – | 50.1 | 50.1 | 75.2 | 75.2 | 100.0 | 100.3 |
| 2/0 | 10/0 | 63.3 | 63.3 | 83.6 | 83.6 | 100.0 | 125.3 | 83.6 | 83.6 | 100.0 | 125.3 | 100.0 | 167.1 |
| 2/6 | | 51.1 | 51.1 | 68.8 | 68.8 | 100.0 | 103.1 | 68.8 | 68.8 | 100.0 | 103.1 | 100.0 | 137.5 |
| 3/0 | | 43.0 | 43.0 | 59.0 | 59.0 | 88.5 | 88.5 | 59.0 | 59.0 | 88.5 | 88.5 | 100.0 | 118.0 |
| 3/6 | | – | – | 52.1 | 52.1 | 78.1 | 78.1 | 52.1 | 52.1 | 78.1 | 78.1 | 100.0 | 104.2 |
| 4/0 | | – | – | – | – | – | – | 47.0 | 47.0 | 70.5 | 70.5 | 94.0 | 94.0 |

A4, B4 = CLUSTER OF 4 ANCHORS W/O HEAD RECEPTOR
A6, B6 = CLUSTER OF 6 ANCHORS W/O HEAD RECEPTOR
A8, B8 = CLUSTER OF 8 ANCHORS W/O HEAD RECEPTOR
SEE SHEET 4 FOR DETAILS.

LOAD CAPACITIES SHOWN ABOVE ARE FOR DOORS USING 4–1/8" SILL HEIGHT
FOR DOORS USING 3–1/2" SILL HEIGHT LIMIT EXTERIOR(+) LOADS TO 90.0 PSF.

NOTE:
GLASS CAPACITIES ON THIS SHEET ARE BASED ON ASTM E1300–04 (3 SEC. GUSTS) AND FLORIDA BUILDING COMMISSION DECLARATORY STATEMENT DCA05–DEC–219

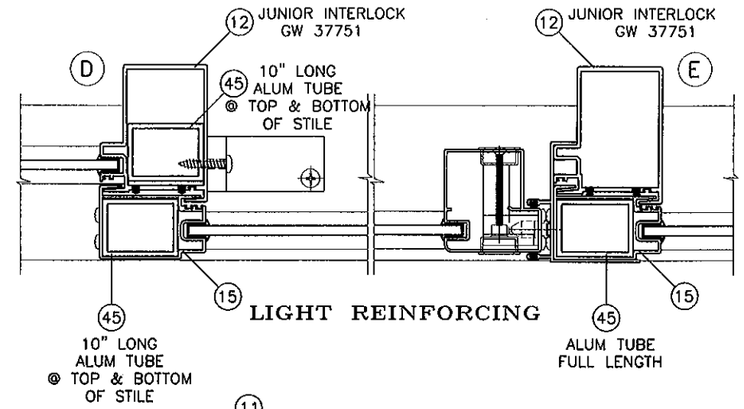


LIGHT REINFORCING

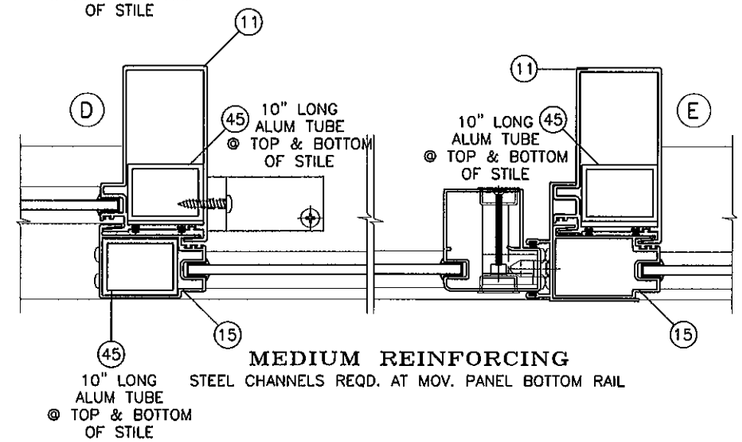


MEDIUM REINFORCING
STEEL CHANNELS REQD. AT MOV. PANEL BOTTOM RAIL

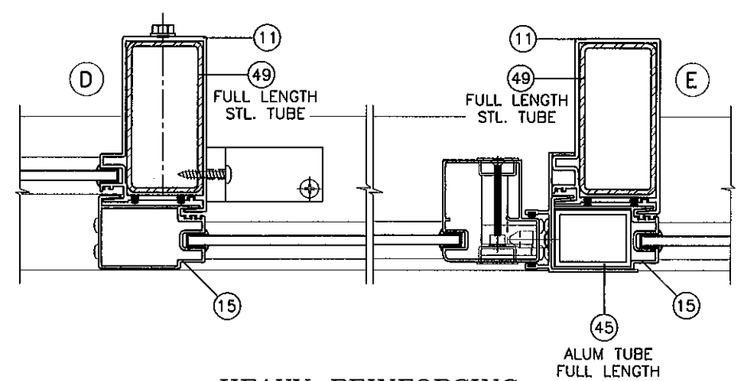


HEAVY REINFORCING
STEEL CHANNELS REQD. AT MOV. PANEL BOTTOM RAIL

**TYPICAL ANCHORS:** SEE ELEV./CHART FOR SPACING

ANCHORS WITHOUT HEAD RECEPTOR

TYPE 'A' 1/4" ULTRACON BY 'ELCO' (Fu=177 KSI, Fy=155 KSI)
INTO 2BY WOOD BUCKS OR WOOD STRUCTURES
1–1/2" MIN. PENETRATION INTO WOOD

THRU 1BY WOOD BUCKS INTO CONC. OR MASONRY
1–1/4" MIN. EMBED INTO CONC. OR MASONRY

TYPE 'B' 1/4" ULTRACON BY 'ELCO' (Fu=177 KSI, Fy=155 KSI)
DIRECTLY INTO CONC. OR MASONRY
1–1/4" MIN. EMBED INTO CONC. OR MASONRY

#14 SMS OR SELF DRILLING SCREWS (GRADE 2 CRS)
INTO MIAMI–DADE COUNTY APPROVED MULLIONS (MIN. THK. = 1/8")
INTO METAL STRUCTURES
STEEL : 12 GA. MIN. (Fy = 36 KSI MIN.)
ALUMINUM : 1/8" THK. MIN. (6063–T5 MIN.)
(STEEL IN CONTACT WITH ALUMINUM TO BE PLATED OR PAINTED)

TYPICAL EDGE DISTANCE
INTO CONCRETE AND MASONRY = 2–1/2" MIN.
INTO WOOD STRUCTURE = 1" MIN.
INTO METAL STRUCTURE = 3/4" MIN.

Engr: JAVAD AHMAD
CIVIL
FLA. PE # 70592
C.A.N. 3538

MAY 02 2012

PRODUCT REVISED
as complying with the Florida Building Code
Acceptance No 12-0507.05
Expiration Date 1/23/2013
By
Miami Dade Product Control


AL-FAROOQ CORPORATION
ENGINEERS & PRODUCT DEVELOPMENT
1235 S.W. 87 AVE
MIAMI, FLORIDA 33174
TEL. (305) 264-8100 FAX. (305) 262-6978
COMP-ANL\W02-115TMW


SERIES-350 ALUM. SLIDING GLASS DOOR (N.I.)


T.M. WINDOWS LLC.
601 N.W. 12TH AVE.
POMPANO BEACH, FL. 33069
TEL. (954) 781-4430 FAX. (954) 781-5078


revisions:

| no | date | by | description |
|---|---|---|---|
| A | 07.14.06 | | UPDATED FOR 2004 FBC |
| B | 03.16.07 | | REV. PER BCCO COMMENTS |
| C | 03.12.12 | | UPDATED TO 2010 FBC |

date: 12-02-02
scale: 1/2" = 1"
dr. by: HAMID
chk. by:

drawing no.
W02-115

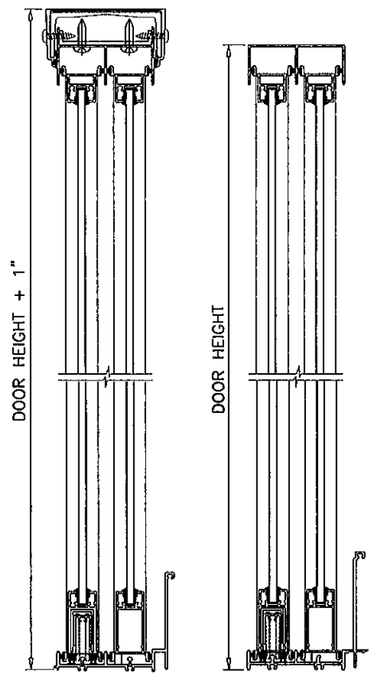


CHART AT RIGHT IS FOR DOOR HEIGHTS WITHOUT HEAD RECEPTOR.
DOORS USING HEAD RECEPTOR MAY BE 1" HIGHER THAN SHOWN (SEE SKETCH)

## DESIGN LOAD CAPACITY – PSF
### DOORS WITH HEAD RECEPTOR

| PANEL WIDTH FT./IN. | DOOR HEIGHT FT./IN. | LIGHT REINF. TYPE 'C' OR 'D' | | MEDIUM REINFORCING | | | | | | | | | | HEAVY REINFORCING | | | | | | | | | |
|---|---|---|---|---|---|---|---|---|---|---|---|---|---|---|---|---|---|---|---|---|---|---|---|
| | | | | ANCHORS TYPE 'C' | | | | | | ANCHORS TYPE 'D' | | | | ANCHORS TYPE 'C' | | | | | | ANCHORS TYPE 'D' | | | |
| | | C4 OR D4 | | C4 | | C6 | | C8 | | D4 | | D6 | | C4 | | C6 | | C8 | | D4 | | D6 | |
| | | EXT.(+) | INT.(−) | EXT.(+) | INT.(−) | EXT.(+) | INT.(−) | EXT.(+) | INT.(−) | EXT.(+) | INT.(−) | EXT.(+) | INT.(−) | EXT.(+) | INT.(−) | EXT.(+) | INT.(−) | EXT.(+) | INT.(−) | EXT.(+) | INT.(−) | EXT.(+) | INT.(−) |
| 2/0 | 6/8 | 100.0 | 132.7 | 100.0 | 146.5 | 100.0 | 210.0 | 100.0 | 210.0 | 100.0 | 195.7 | 100.0 | 210.0 | 100.0 | 146.5 | 100.0 | 210.0 | 100.0 | 210.0 | 100.0 | 195.7 | 100.0 | 210.0 |
| 2/6 | | 100.0 | 111.1 | 100.0 | 122.6 | 100.0 | 183.9 | 100.0 | 210.0 | 100.0 | 163.8 | 100.0 | 210.0 | 100.0 | 122.6 | 100.0 | 183.9 | 100.0 | 210.0 | 100.0 | 163.8 | 100.0 | 210.0 |
| 3/0 | | 97.0 | 97.0 | 100.0 | 107.1 | 100.0 | 160.6 | 100.0 | 184.2 | 100.0 | 143.1 | 100.0 | 184.2 | 100.0 | 107.1 | 100.0 | 160.6 | 100.0 | 194.0 | 100.0 | 143.1 | 100.0 | 194.0 |
| 3/6 | | 87.4 | 87.4 | 96.5 | 96.5 | 100.0 | 144.7 | 100.0 | 165.9 | 100.0 | 128.9 | 100.0 | 165.9 | 96.5 | 96.5 | 100.0 | 144.7 | 100.0 | 169.0 | 100.0 | 128.9 | 100.0 | 169.0 |
| 4/0 | | 80.6 | 80.6 | 88.9 | 88.9 | 100.0 | 133.4 | 100.0 | 152.9 | 100.0 | 118.8 | 100.0 | 152.9 | 88.9 | 88.9 | 100.0 | 133.4 | 100.0 | 160.8 | 100.0 | 118.8 | 100.0 | 160.8 |
| 4/6 | | 75.7 | 75.7 | 83.5 | 83.5 | 100.0 | 125.3 | 100.0 | 143.6 | 100.0 | 111.6 | 100.0 | 143.6 | 83.5 | 83.5 | 100.0 | 125.3 | 100.0 | 155.6 | 100.0 | 111.6 | 100.0 | 155.6 |
| 5/0 | | – | – | 79.7 | 79.7 | 100.0 | 119.5 | 100.0 | 137.0 | 100.0 | 106.5 | 100.0 | 137.0 | 79.7 | 79.7 | 100.0 | 119.5 | 100.0 | 149.0 | 100.0 | 106.5 | 100.0 | 149.0 |
| 2/0 | 8/0 | 100.0 | 107.4 | 100.0 | 118.6 | 100.0 | 177.9 | 100.0 | 203.9 | 100.0 | 158.4 | 100.0 | 203.9 | 100.0 | 118.6 | 100.0 | 177.9 | 100.0 | 210.0 | 100.0 | 158.4 | 100.0 | 210.0 |
| 2/6 | | 89.1 | 89.1 | 98.4 | 98.4 | 100.0 | 147.6 | 100.0 | 169.2 | 100.0 | 131.4 | 100.0 | 169.2 | 98.4 | 98.4 | 100.0 | 147.6 | 100.0 | 193.3 | 100.0 | 131.4 | 100.0 | 193.3 |
| 3/0 | | 77.1 | 77.1 | 85.1 | 85.1 | 100.0 | 127.7 | 100.0 | 146.4 | 100.0 | 113.7 | 100.0 | 146.4 | 85.1 | 85.1 | 100.0 | 127.7 | 100.0 | 167.3 | 100.0 | 113.7 | 100.0 | 167.3 |
| 3/6 | | 68.8 | 68.8 | 75.9 | 75.9 | 100.0 | 113.8 | 100.0 | 130.5 | 100.0 | 101.4 | 100.0 | 130.5 | 75.9 | 75.9 | 100.0 | 113.8 | 100.0 | 135.7 | 100.0 | 101.4 | 100.0 | 135.7 |
| 4/0 | | 62.7 | 62.7 | 69.2 | 69.2 | 100.0 | 103.8 | 100.0 | 119.0 | 92.4 | 92.4 | 100.0 | 119.0 | 69.2 | 69.2 | 100.0 | 103.8 | 100.0 | 123.9 | 92.4 | 92.4 | 100.0 | 123.9 |
| 4/6 | | – | – | 64.2 | 64.2 | 96.2 | 96.2 | 100.0 | 110.3 | 85.7 | 85.7 | 100.0 | 110.3 | 64.2 | 64.2 | 96.2 | 96.2 | 100.0 | 120.8 | 85.7 | 85.7 | 100.0 | 120.8 |
| 5/0 | | – | – | – | – | – | – | – | – | – | – | – | – | 60.4 | 60.4 | 90.5 | 90.5 | 100.0 | 118.6 | 80.7 | 80.7 | 100.0 | 118.6 |
| 2/0 | 9/0 | 87.2 | 87.2 | 100.0 | 103.8 | 100.0 | 155.6 | 100.0 | 178.4 | 100.0 | 138.6 | 100.0 | 178.4 | 100.0 | 103.8 | 100.0 | 155.6 | 100.0 | 203.9 | 100.0 | 138.6 | 100.0 | 203.9 |
| 2/6 | | 70.5 | 70.5 | 85.7 | 85.7 | 100.0 | 128.5 | 100.0 | 147.4 | 100.0 | 114.5 | 100.0 | 147.4 | 85.7 | 85.7 | 100.0 | 128.5 | 100.0 | 168.4 | 100.0 | 114.5 | 100.0 | 168.4 |
| 3/0 | | 59.6 | 59.6 | 73.8 | 73.8 | 100.0 | 110.7 | 100.0 | 126.9 | 98.6 | 98.6 | 100.0 | 126.9 | 73.8 | 73.8 | 100.0 | 110.7 | 100.0 | 145.0 | 98.6 | 98.6 | 100.0 | 145.0 |
| 3/6 | | 51.9 | 51.9 | 65.4 | 65.4 | 98.1 | 98.1 | 100.0 | 112.5 | 87.4 | 87.4 | 100.0 | 112.5 | 65.4 | 65.4 | 98.1 | 98.1 | 100.0 | 122.9 | 87.4 | 87.4 | 100.0 | 122.9 |
| 4/0 | | – | – | 59.3 | 59.3 | 88.9 | 88.9 | 100.0 | 102.0 | 79.2 | 79.2 | 100.0 | 102.0 | 59.3 | 59.3 | 88.9 | 88.9 | 100.0 | 107.0 | 79.2 | 79.2 | 100.0 | 107.0 |
| 4/6 | | – | – | – | – | – | – | – | – | – | – | – | – | 54.7 | 54.7 | 82.0 | 82.0 | 100.0 | 101.9 | 73.0 | 73.0 | 100.0 | 101.9 |
| 2/0 | 9/6 | 74.0 | 74.0 | 97.6 | 97.6 | 100.0 | 146.5 | 100.0 | 164.0 | 100.0 | 130.5 | 100.0 | 164.0 | 97.6 | 97.6 | 100.0 | 146.5 | 100.0 | 191.9 | 100.0 | 130.5 | 100.0 | 191.9 |
| 2/6 | | 59.7 | 59.7 | 80.5 | 80.5 | 100.0 | 120.7 | 100.0 | 132.5 | 100.0 | 107.5 | 100.0 | 132.5 | 80.5 | 80.5 | 100.0 | 120.7 | 100.0 | 158.2 | 100.0 | 107.5 | 100.0 | 158.2 |
| 3/0 | | 50.4 | 50.4 | 69.2 | 69.2 | 100.0 | 103.8 | 100.0 | 111.8 | 92.4 | 92.4 | 100.0 | 111.8 | 69.2 | 69.2 | 100.0 | 103.8 | 100.0 | 135.9 | 92.4 | 92.4 | 100.0 | 135.9 |
| 3/6 | | – | – | 61.2 | 61.2 | 91.8 | 91.8 | 97.2 | 97.2 | 81.8 | 81.8 | 97.2 | 97.2 | 61.2 | 61.2 | 91.8 | 91.8 | 100.0 | 118.8 | 81.8 | 81.8 | 100.0 | 118.8 |
| 4/0 | | – | – | – | – | – | – | – | – | – | – | – | – | 55.3 | 55.3 | 83.0 | 83.0 | 100.0 | 100.9 | 73.9 | 73.9 | 100.0 | 100.9 |
| 2/0 | 10/0 | 63.3 | 63.3 | 92.2 | 92.2 | 100.0 | 138.3 | 100.0 | 140.4 | 100.0 | 123.2 | 100.0 | 140.4 | 92.2 | 92.2 | 100.0 | 138.3 | 100.0 | 181.2 | 100.0 | 123.2 | 100.0 | 181.2 |
| 2/6 | | 51.1 | 51.1 | 75.9 | 75.9 | 100.0 | 113.3 | 100.0 | 113.3 | 100.0 | 101.4 | 100.0 | 113.3 | 75.9 | 75.9 | 100.0 | 113.8 | 100.0 | 149.1 | 100.0 | 101.4 | 100.0 | 149.1 |
| 3/0 | | 43.0 | 43.0 | 65.1 | 65.1 | 95.5 | 95.5 | 95.5 | 95.5 | 87.0 | 87.0 | 95.5 | 95.5 | 65.1 | 65.1 | 97.6 | 97.6 | 100.0 | 127.9 | 87.0 | 87.0 | 100.0 | 127.9 |
| 3/6 | | – | – | 57.5 | 57.5 | 82.9 | 82.9 | 82.9 | 82.9 | 76.8 | 76.8 | 82.9 | 82.9 | 57.5 | 57.5 | 86.2 | 86.2 | 100.0 | 113.0 | 76.8 | 76.8 | 100.0 | 113.0 |
| 4/0 | | – | – | – | – | – | – | – | – | – | – | – | – | 51.9 | 51.9 | 77.8 | 77.8 | 96.3 | 96.3 | 69.3 | 69.3 | 96.3 | 96.3 |

C4, D4 = CLUSTER OF 4 ANCHORS WITH HEAD RECEPTOR
C6, D6 = CLUSTER OF 6 ANCHORS WITH HEAD RECEPTOR
C8 = CLUSTER OF 8 ANCHORS WITH HEAD RECEPTOR
SEE SHEET 4 FOR DETAILS.

LOAD CAPACITIES SHOWN ABOVE ARE FOR DOORS USING 4-1/8" SILL HEIGHT
FOR DOORS USING 3-1/2" SILL HEIGHT LIMIT EXTERIOR(+) LOADS TO 90.0 PSF.

**TYPICAL ANCHORS:** SEE ELEV./CHART FOR SPACING

ANCHORS WITH HEAD RECEPTOR

TYPE 'C' 1/4" ULTRACON BY 'ELCO' (Fu=177 KSI, Fy=155 KSI)
INTO 2BY WOOD BUCKS OR WOOD STRUCTURES
1-1/2" MIN. PENETRATION INTO WOOD

THRU 1BY WOOD BUCKS INTO CONC. OR MASONRY
1-1/4" MIN. EMBED INTO CONC. OR MASONRY

TYPE 'D' 1/4" ULTRACON BY 'ELCO' (Fu=177 KSI, Fy=155 KSI)
DIRECTLY INTO CONC. OR MASONRY
1-1/4" MIN. EMBED INTO CONC. OR MASONRY

TYPICAL EDGE DISTANCE

INTO CONCRETE AND MASONRY = 2-1/2" MIN.
INTO WOOD STRUCTURE = 1" MIN.
INTO METAL STRUCTURE = 3/4" MIN.

NOTE:
GLASS CAPACITIES ON THIS SHEET ARE BASED ON ASTM E1300-04 (3 SEC. GUSTS) AND FLORIDA BUILDING COMMISSION DECLARATORY STATEMENT DCA05-DEC-219

Engr: JAVAD AHMAD
CIVIL
FLA. PE # 70592
C.A.N. 3538

MAY 02 2012

PRODUCT REVISED
as complying with the Florida Building Code
Acceptance No 12-0507.05
Expiration Date 1/23/2013
By
Miami Dade Product Control


AL-FAROOQ CORPORATION
ENGINEERS & PRODUCT DEVELOPMENT
1235 S.W. 87 AVE
MIAMI, FLORIDA 33174
TEL. (305) 264-8100 FAX. (305) 262-6978
COMP-ANL\W02-115TMW


SERIES-350 ALUM. SLIDING GLASS DOOR (N.I.)


T.M. WINDOWS LLC.
601 N.W. 12TH AVE.
POMPANO BEACH, FL. 33069
TEL. (954) 781-4430 FAX. (954) 781-5078


revisions:

| no | date | by | description |
|---|---|---|---|
| A | 07.14.06 | | UPDATED FOR 2004 FBC |
| B | 03.16.07 | | REV. PER BCCO COMMENTS |
| C | 03.12.12 | | UPDATED TO 2010 FBC |

date: 12-02-02
scale: 1/2" = 1"
dr. by: HAMID
chk. by:

drawing no.
W02-115

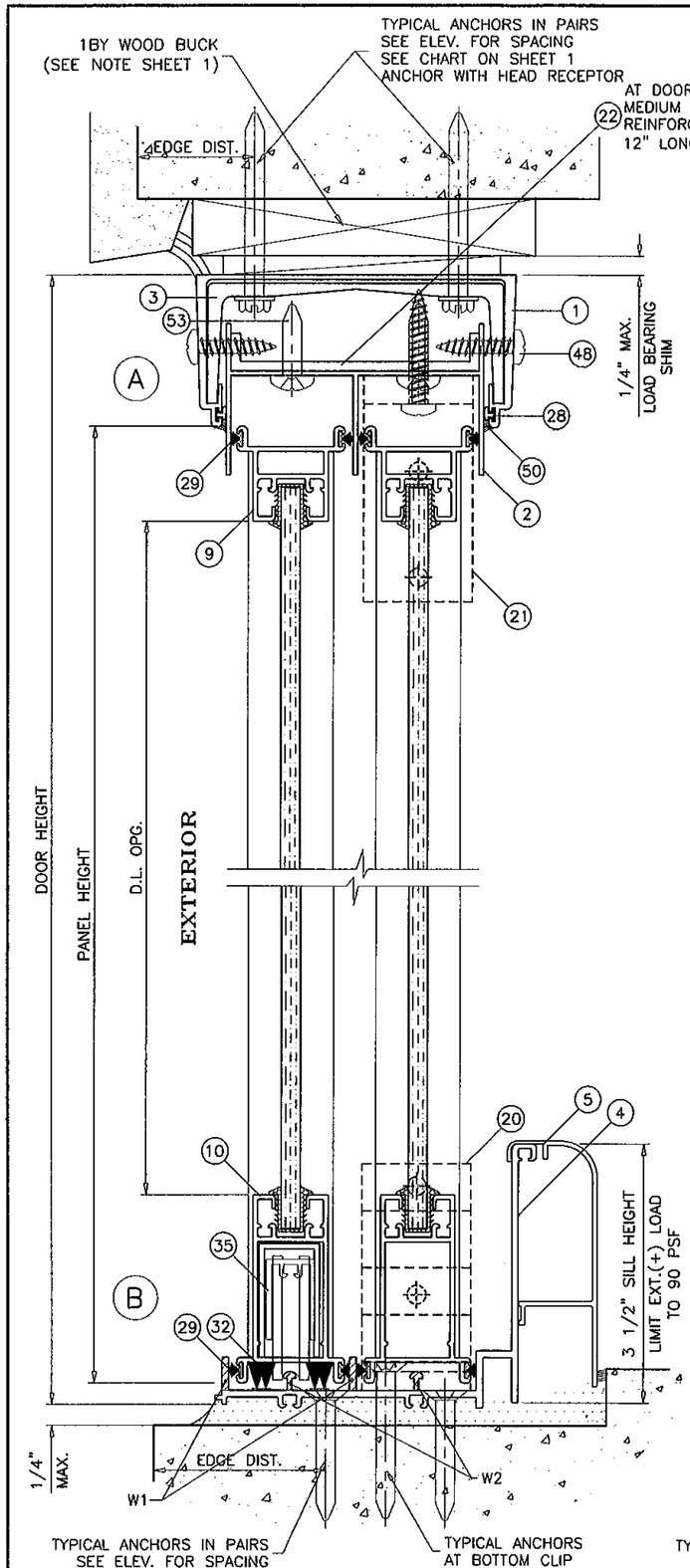


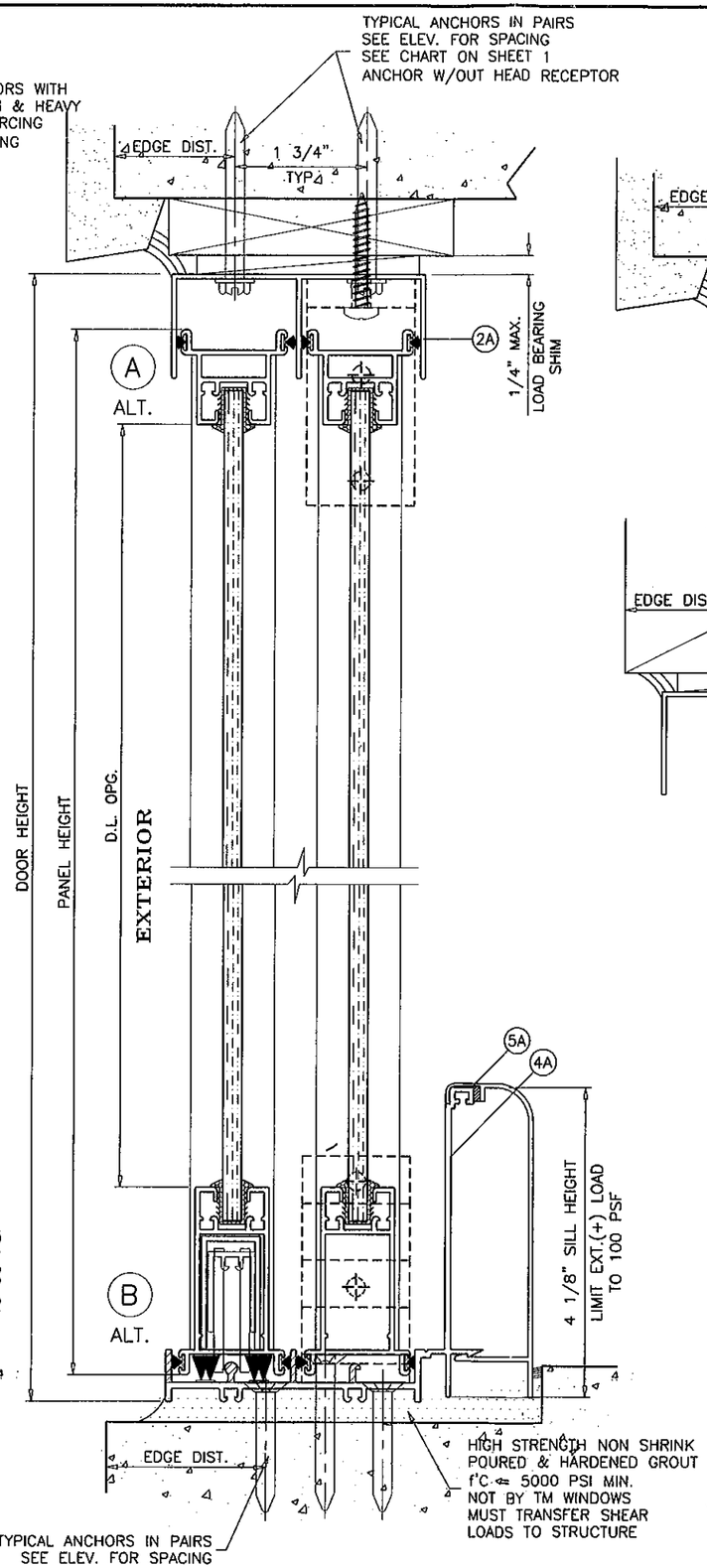


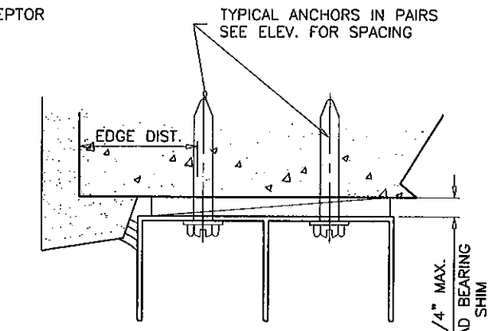


ATTACHMENT TO CONCRETE

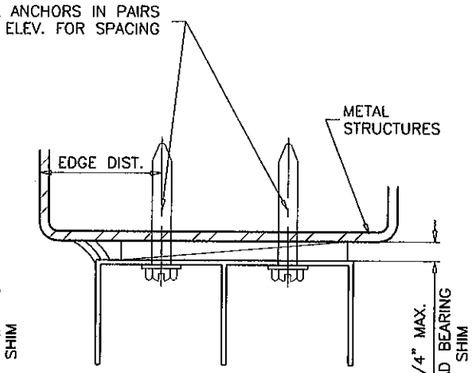


ATTACHMENT TO ALUM OR STEEL

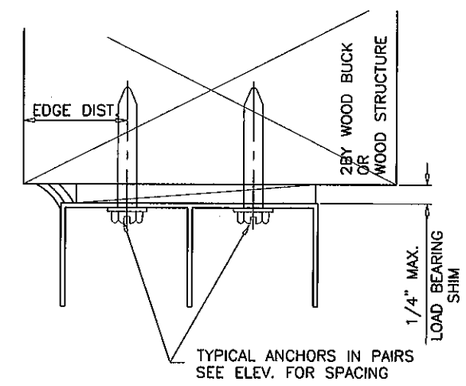


## SEALANTS:

FIXED PANEL STILE TO FRAME, PANEL AND FRAME CORNERS AND HEAD RECEPTOR TO FRAME SEALED WITH CLEAR COLORED SILICONE.

## WEEPHOLES:

W1 = (4) 1" WEEP NOTCH
ONE AT EACH END OF EACH PANEL

W2 = (4) 3/8" WEEP NOTCH
ONE AT EACH END OF EACH PANEL

WOOD BUCKS AND METAL STRUCTURE NOT BY TM WINDOWS MUST SUSTAIN LOADS IMPOSED BY GLAZING SYSTEM AND TRANSFER THEM TO THE BUILDING STRUCTURE.

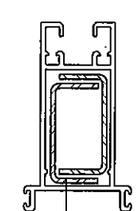


MOV. PANEL BOTTOM RAIL

Engr: JAVAD AHMAD
CIVIL
FLA. PE # 70592
C.A.N. 3538

MAY 02 2012

PRODUCT REVISED
as complying with the Florida
Building Code
Acceptance No. 12-0507.05
Expiration Date 1/23/2013
By
Miami Dade Product Control


AL-FAROOQ CORPORATION
ENGINEERS & PRODUCT DEVELOPMENT
1235 S.W. 87 AVE
MIAMI, FLORIDA 33174
TEL. (305) 264-8100 FAX. (305) 262-6978
COMP-ANL\W02-115TMW


SERIES-350 ALUM. SLIDING GLASS DOOR (N.I.)

T.M. WINDOWS LLC.
601 N.W. 12TH AVE.
POMPANO BEACH, FL. 33069
TEL. (954) 781-4430 FAX. (954) 781-5078

revisions:

| no | date | by | description |
|---|---|---|---|
| A | 07.14.06 | | UPDATED FOR 2004 FBC |
| B | 03.16.07 | | REV. PER BCCO COMMENTS |
| C | 03.12.12 | | UPDATED TO 2010 FBC |

date: 12-02-02
scale: 1/2" = 1"
dr. by: HAMID
chk. by:

drawing no.
W02-115

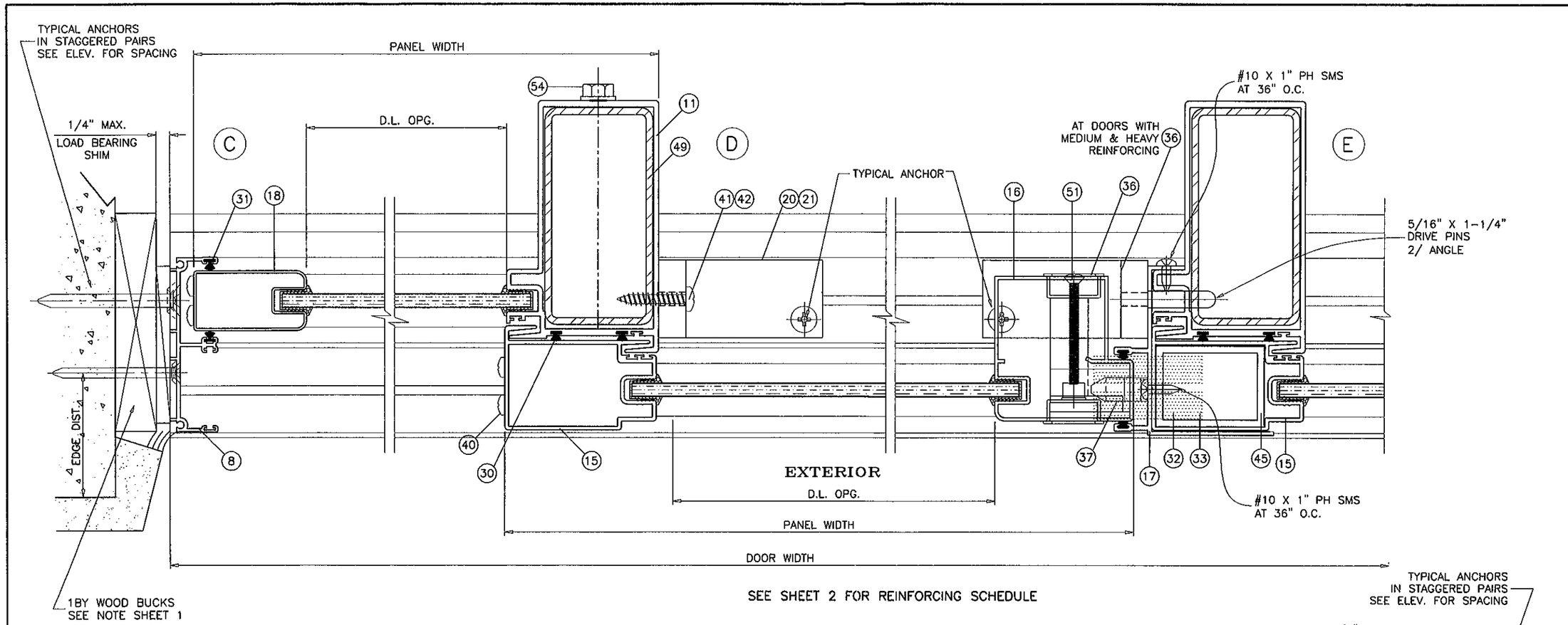


SEE SHEET 2 FOR REINFORCING SCHEDULE

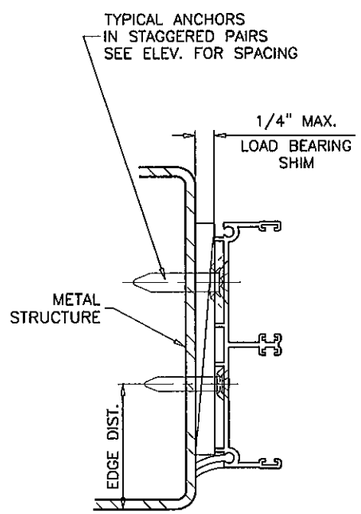


ATTACHMENT TO METAL STRUCTURES
STEEL OR ALUMINUM

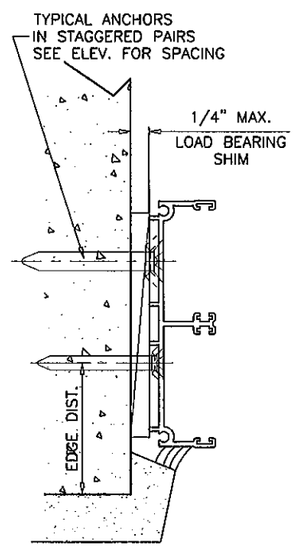


ATTACHMENT TO CONCRETE
OR CONC. BLOCK

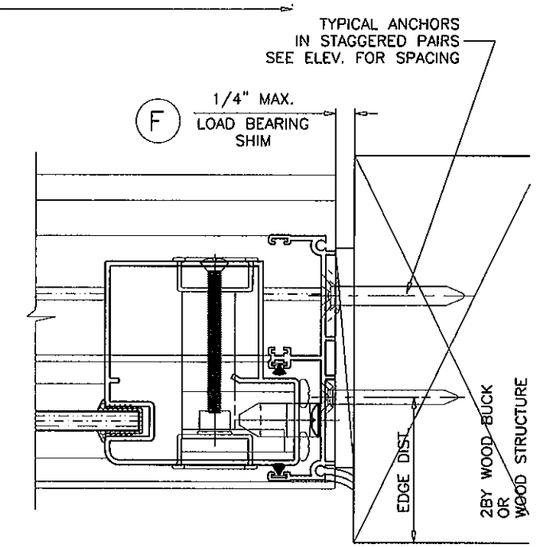


Engr: JAVAD AHMAD
CIVIL
FLA. PE # 70592
C.A.N. 3538

MAY 02 2012

PRODUCT REVISED
as complying with the Florida
Building Code
Acceptance No. 12-0507.05
Expiration Date 1/23/2013
By
Miami Dade Product Control

**AL-FAROOQ CORPORATION**
ENGINEERS & PRODUCT DEVELOPMENT
1235 S.W. 87 AVE
MIAMI, FLORIDA 33174
TEL. (305) 264-8100 FAX. (305) 262-6978
COMP-ANL\W02-115TMW

SERIES-350 ALUM. SLIDING GLASS DOOR (N.I.)

**T.M. WINDOWS LLC.**
601 N.W. 12TH AVE.
POMPANO BEACH, FL. 33069
TEL. (954) 781-4430 FAX. (954) 781-5078

revisions:

| no | date | by | description |
|---|---|---|---|
| A | 07.14.06 | | UPDATED FOR 2004 FBC |
| B | 03.16.07 | | REV. PER BCCO COMMENTS |
| C | 03.12.12 | | UPDATED TO 2010 FBC |

date: 12-02-02
scale: 1/2" = 1"
dr. by: HAMID
chk. by:

drawing no.
W02-115

sheet 5 of 7

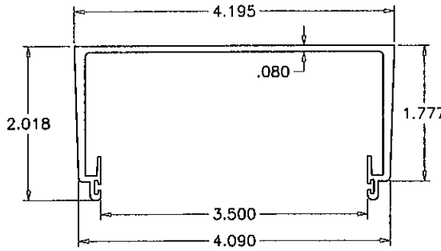


HEAD RECEPTOR
GW 37654

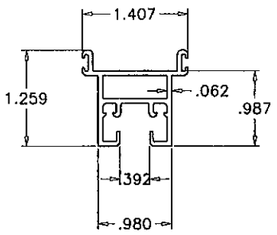


PANEL TOP RAIL
GW 36027

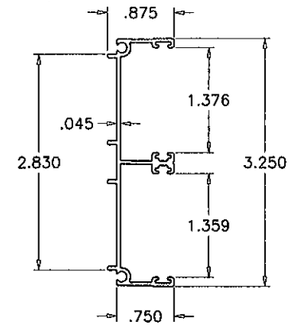


DOOR FRAME JAMB
GW 34977

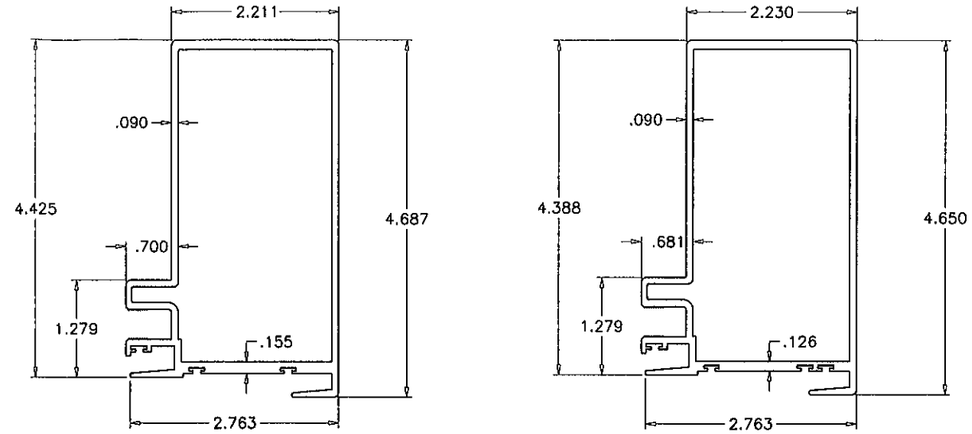


2"x4" MAJOR INTERLOCK
GW 37560A (OPTIONAL)

2"x4" MAJOR INTERLOCK
GW 37560

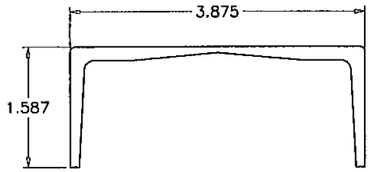


HEAD REINFORCING CHANNEL
GW 37655

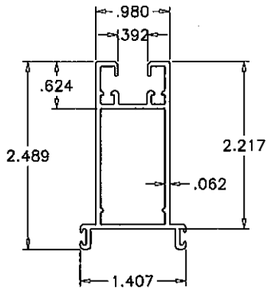


PANEL BOTTOM RAIL
GW 36707

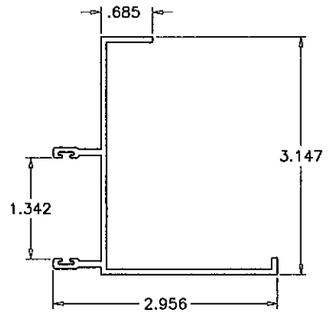


STILE ADAPTER
GW 37629

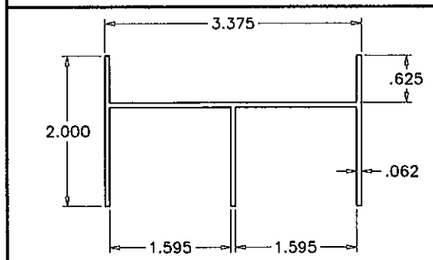


FRAME HEAD
GW 30710

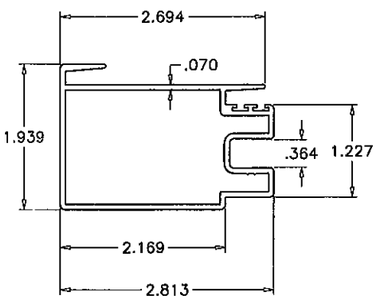


MINOR INTERLOCK
GW 37558

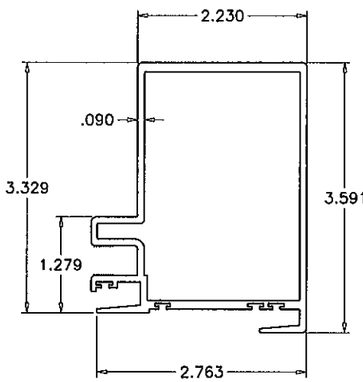


2"x3" MAJOR INTERLOCK
GW 37751

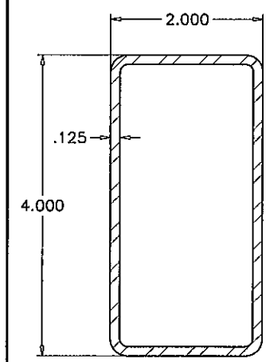


INTERLOCK/ASTRAGAL
REINFORCING

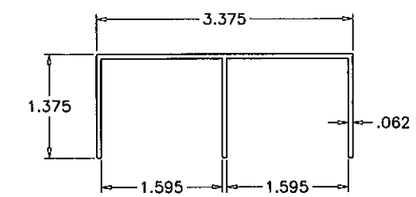


FRAME HEAD (OPTIONAL)
GW 32096

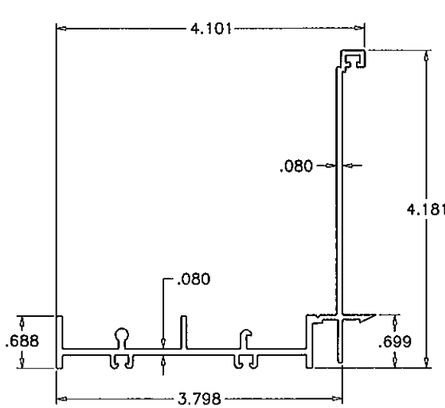


FRAME SILL (OPTIONAL)
TM-067

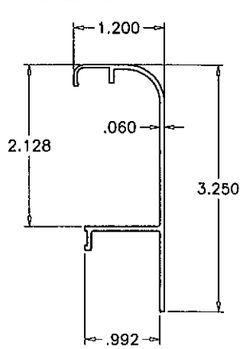


SILL COVER
TM-095

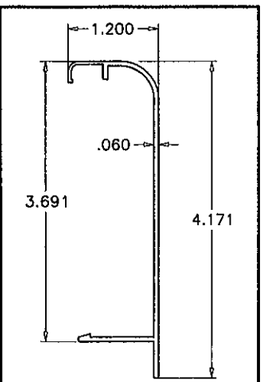


SILL COVER
TM-074

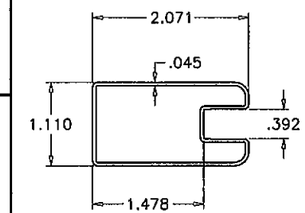


LOCK STILE
GW 34975

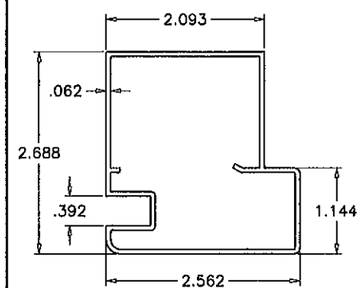


MALE BUTT STILE
GW 33157

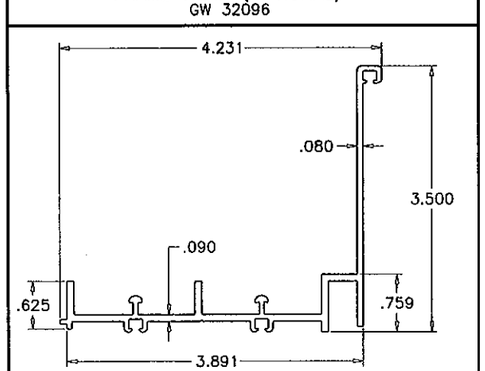


FRAME SILL
GW 37557

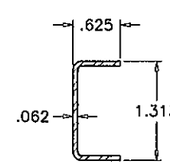


BOTTOM RAIL REINFORCING

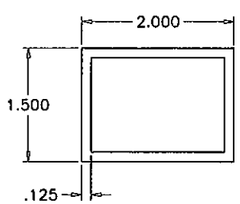


INTERLOCK REINFORCING

Engr: JAVAD AHMAD
CIVIL
FLA. PE # 70592
C.A.N. 3538

MAY 02 2012

PRODUCT REVISED
as complying with the Florida
Building Code
Acceptance No. 12-0507.05
Expiration Date 1/23/2013
By
Miami Dade Product Control

**AL-FAROOQ CORPORATION**
ENGINEERS & PRODUCT DEVELOPMENT
1235 S.W. 87 AVE
MIAMI, FLORIDA 33174
TEL. (305) 264-8100 FAX. (305) 262-6978

COMP-ANL\W02-115TMW

SERIES-350 ALUM. SLIDING GLASS DOOR (N.I.)

**T.M. WINDOWS LLC.**
601 N.W. 12TH AVE.
POMPANO BEACH, FL. 33069
TEL. (954) 781-4430 FAX. (954) 781-5078

revisions:

| no | date | by | description |
|---|---|---|---|
| A | 07.14.06 | | UPDATED FOR 2004 FBC |
| B | 03.16.07 | | REV. PER BCCO COMMENTS |
| C | 03.12.12 | | NO CHANGE THIS SHEET |

date: 12-02-02
scale: 1/2" = 1"
dr. by: HAMID
chk. by:

drawing no.
W02-115

sheet 6 of 7

| ITEM | PART # | QUANTITY | DESCRIPTION | MATERIAL | MANF./SUPPLIER/REMARKS |
|---|---|---|---|---|---|
| 1 | GW 37654 | 1 | HEAD RECEPTOR | ALUM-6063 T6 | FRAME TOP |
| 2 | GW 30710 | 1 | FRAME HEAD | ALUM-6063 T6 | FRAME TOP |
| 2A | GW 32096 | 1 | FRAME HEAD (OPTIONAL) | ALUM-6063 T6 | FRAME TOP |
| 3 | GW 37655 | 6 | HEAD RECEPTOR REINFORCEMENT (6" LONG) | ALUM-6063 T6 | AT HEAD ENDS & CENTER LINE OF PANELS |
| 3A | GW 37655 | 3 | HEAD RECEPTOR REINFORCEMENT (12" LONG) | ALUM-6063 T6 | AT ASTRAGAL & INTERLOCK LOCATIONS |
| 4 | GW 37557 | 1 | 3 1/2" SILL | ALUM-6063 T6 | FRAME BOTTOM |
| 4A | TM-067 | 1 | 4 1/4" SILL | ALUM-6063 T6 | FRAME BOTTOM |
| 5 | TM-095 | 1 | DECORATIVE SILL COVER (OPTIONAL) | ALUM-6063 T5 | FRAME BOTTOM |
| 5A | TM-074 | 1 | DECORATIVE SILL COVER (OPTIONAL) | ALUM-6063 T5 | FRAME BOTTOM |
| 8 | GW 34977 | 2 | FRAME JAMB (TWO TRACKS) | ALUM-6063 T6 | FRAME SIDE |
| 9 | GW 36027 | 4 | TOP RAIL | ALUM-6063 T6 | PANEL TOP |
| 10 | GW 36707 | 4 | BOTTOM RAIL | ALUM-6063 T6 | PANEL BOTTOM |
| 11 | GW 37560 | 2 | 2"X4" MAJOR INTERLOCK | ALUM-6063 T6 | PANEL SIDES |
| 12 | GW 37751 | 2 | 2"X3" MAJOR INTERLOCK | ALUM-6063 T5 | PANEL SIDES |
| 15 | GW 37558 | 2 | MINOR INTERLOCK | ALUM-6063 T5 | PANEL SIDES |
| 16 | GW 33157 | 1 | MALE BUTT STILE | ALUM-6063 T6 | PANEL ASTRAGAL |
| 17 | GW 37629 | 1 | STILE ADAPTER | ALUM-6063 T5 | PANEL ASTRAGAL |
| 18 | GW 34975 | 2 | LOCK STILE | ALUM-6063 T6 | PANEL SIDES |
| 20 | FXD 37743 | 2 | BOTTOM CLIP (3x3x1/4x1 7/16" LG. ANGLE) | ALUMINUM | FRAME SILL |
| 21 | TP 37743 | 2 | TOP CLIP (3x3x1/4x1 7/16" LG. ANGLE) | ALUMINUM | FRAME HEAD |
| 22 | – | 3 | 3 1/4" X 1/2" X 1/8" X 12" LG. REINF. CHANNEL | ALUMINUM | ABOVE INTERLOCKS & ASTRAGAL STILES |
| 23 | – | 2/MOV. PANEL | 5/8" X 1-5/16" X 1/16" THK. CHANNEL, LENGTH = PANEL WIDTH – 8" | STEEL | IN BOTTOM RAIL |
| 28 | WV-3033 | AS REQ'D | BULB TYPE VINYL | VINYL | HEAD RECEPTOR |
| 29 | 4020-PILE | SINGLE ROW | "ULTRAFAB" FIN SEAL WEATHERSTRIP | WOOL | TOP & BOTTOM RAILS |
| 30 | 4037-PILE | 2/ROWS | "ULTRAFAB" FIN SEAL WEATHERSTRIP | WOOL | INTERIOR INTERLOCKS STILES |
| 31 | 4020-PILE | SINGLE ROW | "ULTRAFAB" FIN SEAL WEATHERSTRIP | WOOL | FRAME JAMB/ASTRAGAL |
| 32 | – | 2 | 1/2" x 2" LONG SELF ADHESIVE PILE PAD | WOOL | AT FRAME SILL |
| 33 | – | 1 | 7/8" x 3" LONG SELF ADHESIVE PILE PAD | WOOL | AT FRAME HEAD |
| 35 | TM-36205 | 4 | TM TANDEM ROLLER ASSEMBLY | ALUMINUM/NYLON | BOTTOM ACTIVE PANELS |
| 36 | TM-32476 | 1 | TM LATCH ASSEMBLY | ALUMINUM/VINYL | MALE ASTRAGAL |
| 37 | TM-32424 | 1 | TM KEEPER | ALUMINUM | FEMALE ASTRAGAL |
| 39 | – | 2 | #8 X 1/2" OH. SMS. – KEEPER INST. SCREW | STEEL | FEMALE ASTRAGAL |
| 40 | – | 8/PANEL | #10 X 1" PH. SMS. – PANEL ASSEMBLY SCREW | STEEL | PANEL CORNERS |
| 41 | – | (2/CLIP) | #14 X 1-1/4" PH. SMS. – FIXED PANEL CLIP | STEEL | TOP/BOTTOM CLIPS/STILES |
| 42 | – | 1/CLIP | #14 X 1-1/2" PH. SMS. –TOP FIXED CLIP | STEEL | HEAD TOP INTERLOCK |
| 45 | – | AS REQD. | 1 1/2 x 2 x 1/8 REINF. TUBE, SEE SHEET 2 FOR LENGTHS | ALUMINUM | – |
| 48 | – | 6 | #14 x 1" PH. SMS. | STEEL | AT 50" O.C. |
| 49 | – | AS REQD. | 2x4x1/8" THK. REINFORCING TUBE, FULL LENGTH | HR STEEL | MAJOR INTERLOCK/ASTRAGAL |
| 50 | – | AS REQ'D | SILICONE CAP (DOW 995) | SILICONE | FRAME/HEAD RECEPTOR |
| 51 | – | 2/LATCH | #10 X 2" OH. MS. – ASSEMBLY SCREW | STEEL | LATCH ASSEMBLY |
| 53 | – | 4/CHANNEL | #14 X 1-1/2" PH. SMS. | STEEL | AT HEAD ALUM. CHANNEL |
| 54 | – | 1/INTERLOCK | 3/8"x6" LG. HH. MS. SECURITY PIN | STEEL | AT INTERLOCK (INTERIOR) |
| 55 | WV-1051 | AS REQD. | GLAZING GASKET | VINYL | AMERICAN VINYL CO. |

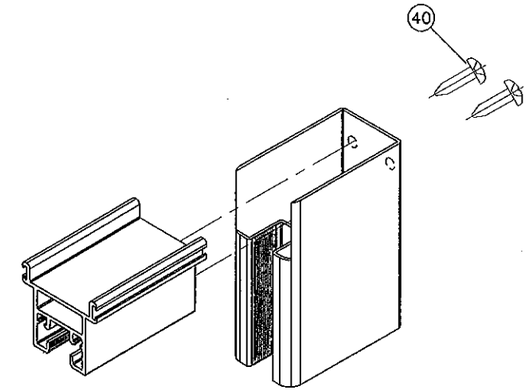


PANEL TOP CORNER

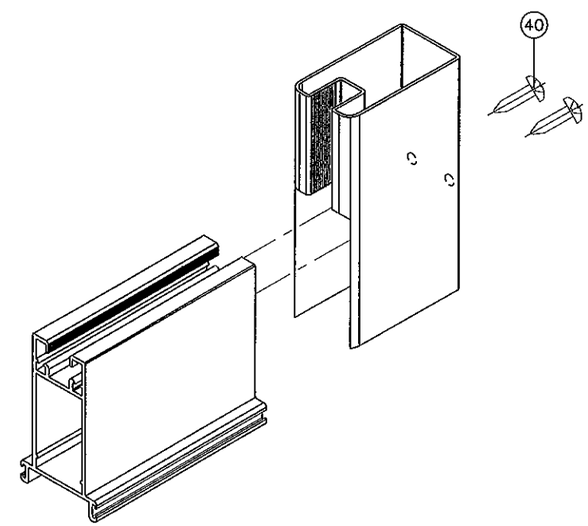


PANEL BOTTOM CORNER

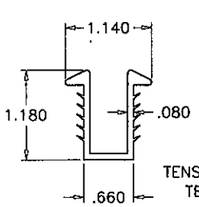


HARDNESS = 75 SHORE A
TENSILE STRENGTH (100% STRAIN) = 730 PSI
TENSILE STRENGTH (BREAK) = 1460 PSI
ELONGATION AT BREAK = 390%
SPECIFIC GRAVITY = 1.51

GLAZING GASKET
SCALE 1:1

DECLINED

Engr: JAVAD AHMAD
CIVIL
FLA. PE # 70592
C.A.N. 3538

MAY 02 2012

PRODUCT REVISED
as complying with the Florida
Building Code
Acceptance No. 12-0507.05
Expiration Date 1/23/2013
By
Miami Dade Product Control


AL-FAROOQ CORPORATION
ENGINEERS & PRODUCT DEVELOPMENT
1235 S.W. 87 AVE
MIAMI, FLORIDA 33174
TEL. (305) 264-8100 FAX. (305) 262-6978
COMP-ANL\W02-115TMW


SERIES-350 ALUM. SLIDING GLASS DOOR (N.I.)


T.M. WINDOWS LLC.
601 N.W. 12TH AVE.
POMPANO BEACH, FL. 33069
TEL. (954) 781-5078 FAX. (954) 781-4430


revisions:

| no | date | by | description |
|---|---|---|---|
| A | 07.14.06 | | UPDATED FOR 2004 FBC |
| B | 03.16.07 | | REV. PER BCCO COMMENTS |
| C | 03.12.12 | | UPDATED TO 2010 FBC |

date: 12-02-02
scale: 1/2" = 1"
dr. by: HAMID
chk. by:

drawing no.
W02-115

sheet 7 of 7