MIAMI-DADE COUNTY
DEPARTMENT OF PERMITTING, ENVIRONMENT, AND REGULATORY AFFAIRS (PERA)
BOARD AND CODE ADMINISTRATION DIVISION

NOTICE OF ACCEPTANCE (NOA)

MIAMI-DADE COUNTY
PRODUCT CONTROL SECTION
11805 SW 26 Street, Room 208
Miami, Florida 33175-2474
T (786) 315-2590 F (786) 315-2599
www.miamidade.gov/pera/

T.M. Windows, LLC
601 NW 12th Ave.
Pompano Beach, FL 33069

SCOPE:

This NOA is being issued under the applicable rules and regulations governing the use of construction materials. The documentation submitted has been reviewed and accepted by Miami-Dade County PERA -Product Control Section to be used in Miami Dade County and other areas where allowed by the Authority Having Jurisdiction (AHJ).

This NOA shall not be valid after the expiration date stated below. The Miami-Dade County Product Control Section (In Miami Dade County) and/or the AHJ (in areas other than Miami Dade County) reserve the right to have this product or material tested for quality assurance purposes. If this product or material fails to perform in the accepted manner, the manufacturer will incur the expense of such testing and the AHJ may immediately revoke, modify, or suspend the use of such product or material within their jurisdiction. PERA reserves the right to revoke this acceptance, if it is determined by Miami-Dade County Product Control Section that this product or material fails to meet the requirements of the applicable building code.

This product is approved as described herein, and has been designed to comply with the Florida Building Code, including the High Velocity Hurricane Zone.

DESCRIPTION: Series "350" Aluminum Sliding Glass Door w/ Reinforcements- S.M.I.

APPROVAL DOCUMENT: Drawing No. **W02-117,** titled "Series 350-Alum. Sliding Glass Door (S.M.I.)", sheets 1 through 7 of 7, dated 12/19/02, with revision **D** dated 03/13/12, prepared by Al-Farooq Corporation, signed and sealed by Javad Ahmad, P.E., bearing the Miami-Dade County Product Control Revision stamp with the Notice of Acceptance number and expiration date by the Miami-Dade County Product Control Section.

MISSILE IMPACT RATING: Small Missile Impact Resistant

LABELING: Each unit shall bear a permanent label with the manufacturer's name or logo, city, state and series and following statement: "Miami-Dade County Product Control Approved", noted herein.

RENEWAL of this NOA shall be considered after a renewal application has been filed and there has been no change in the applicable building code negatively affecting the performance of this product.

TERMINATION of this NOA will occur after the expiration date or if there has been a revision or change in the materials, use, and/or manufacture of the product or process. Misuse of this NOA as an endorsement of any product, for sales, advertising or any other purposes shall automatically terminate this NOA. Failure to comply with any section of this NOA shall be cause for termination and removal of NOA.

ADVERTISEMENT: The NOA number preceded by the words Miami-Dade County, Florida, and followed by the expiration date may be displayed in advertising literature. If any portion of the NOA is displayed, then it shall be done in its entirety.

INSPECTION: A copy of this entire NOA shall be provided to the user by the manufacturer or its distributors and shall be available for inspection at the job site at the request of the Building Official.

This NOA **revises NOA # 07-1126.01** and consists of this page 1 and evidence pages E-1, as well as approval document mentioned above.

The submitted documentation was reviewed by **Jaime D. Gascon, P.E.**

MIAMI-DADE COUNTY APPROVED

J. Gascon
7/17/12

NOTICE OF ACCEPTANCE: EVIDENCE SUBMITTED

A. DRAWINGS

1. Manufacturer's die drawings and sections (Submitted under file # **07-1126.01**)
2. Drawing No. **W02-117,** titled "Series 350-Alum. Sliding Glass Door (S.M.I.)", sheets 1 through 7 of 7, dated 12/19/02, with revision **D** dated 03/13/12, prepared by Al-Farooq Corporation, signed and sealed by Javad Ahmad, P.E.

B. TESTS (Submitted under file # **07-1126.01**)

1. Test reports on 1) Air Infiltration Test, per FBC, TAS 202-94
   2) Uniform Static Air Pressure Test, Loading per FBC, TAS 202-94
   3) Water Resistance Test, per FBC, TAS 202-94
   4) Small Missile Impact Test per FBC, TAS 201-94
   5) Forced Entry Test, per FBC 2411.3.2.1 and TAS 202-94
   6) Cyclic Wind Pressure Loading per FBC, TAS 203-94

   along with marked-up drawings and installation diagram of an aluminum sliding glass door, prepared by Fenestration Testing Laboratory, Inc., Test Report No. **FTL-5213** dated 05/03/07, signed and sealed by Michael Wenzel, P.E.
2. Additional test reports FTL 3087 dated 07/01/01, FTL 3125 dated 10/26/01 and FTL 3127 dated 01/22/02, issued by Fenestration Testing Laboratory, Inc., per TAS 202-94 and TAS 201/TAS 203-94 (SMI), signed and sealed by Luis A. Figueredo, P. E.
3. Additional test report FTL 5438 dated 01/11/08, issued by Fenestration Testing Laboratory, Inc., per TAS 202-94 and TAS 201/TAS 203-94 (LMI), signed and sealed by Michael Wenzel, P. E.

C. CALCULATIONS

1. Anchor verification calculations and structural analysis, complying with FBC-2010, prepared by Al Farooq Corporation, dated 04/18/12, signed and sealed by Javad Ahmad, P.E.
2. Glazing complies w/ ASTME-1300-02 & -04

D. QUALITY ASSURANCE

1. Miami Dade Department of Permitting, Environment, and Regulatory Affairs (PERA).

E. MATERIAL CERTIFICATIONS

1. Notice of Acceptance No. **11-0325.05** issued to Solutia, Inc. for their "**Saflex clear & color interlayer**", expiring on 05/21/16.

F. STATEMENTS

1. Statement letter of conformance to FBC 2010 and letter of no financial interest, prepared by Al Farooq Corporation, dated 04/18/12, signed and sealed by Javad Ahmad, P.E.

G. OTHER

1. Technical data sheet for PVC gasket #1348 with GG-75 raw material by American Vinyl Company.
2. Notice of Acceptance No. **07-1126.01**, issued to T.M. Window & Door LLC for their Series "350 Aluminum Sliding Glass Door w/Reinforcements – S.M.I.", approved on 07/03/08 and expiring on 07/03/13.

Jaime D. Gascon, P.E.
Product Control Section Supervisor
NOA No 12-0507.06
Expiration Date: July 3, 2013
Approval Date: July 26, 2012

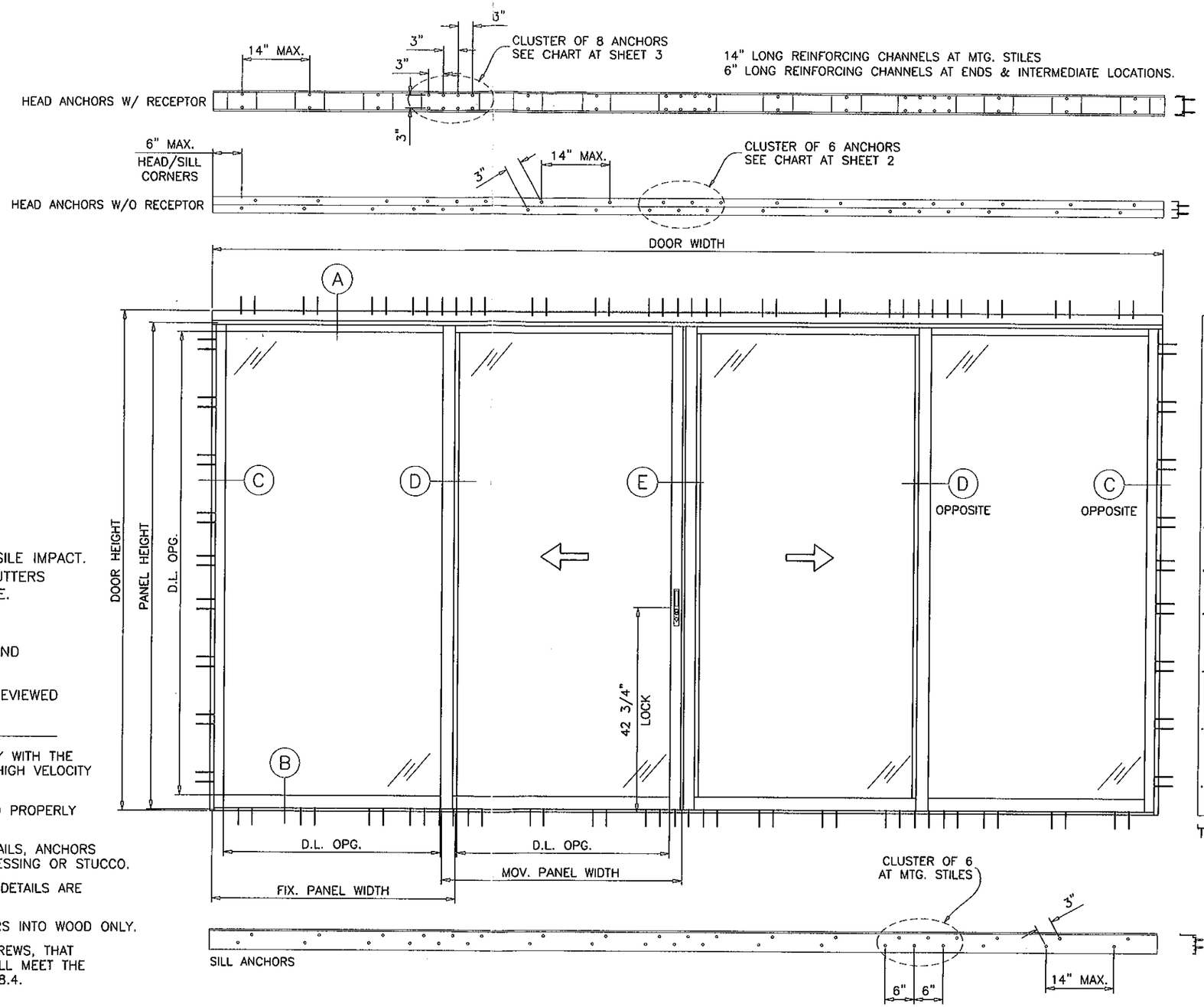

TYPICAL ELEVATION

MODEL 350 S.M.I.
HI-LOAD REINFORCED
ALUMINUM SLIDING GLASS DOOR

DOORS WITH LAMINATED GLASS RATED FOR SMALL MISSILE IMPACT. MIAMI-DADE COUNTY APPROVED IMPACT RESISTANT SHUTTERS REQUIRED FOR INSTALLATIONS UP TO 30 FT. OF GRADE. SHUTTERS NOT REQD. FOR INSTALLATIONS ABOVE 30 FT. OF GRADE.

SEE CHARTS ON SHEETS 2 & 3 FOR DESIGN LOADS AND ANCHOR OPTIONS.

APPLICABLE EGRESS REQUIREMENTS PER FBC TO BE REVIEWED BY BUILDING OFFICIAL.

THIS PRODUCT HAS BEEN DESIGNED AND TESTED TO COMPLY WITH THE REQUIREMENTS OF THE FLORIDA BUILDING CODE INCLUDING HIGH VELOCITY HURRICANE ZONE (HVHZ).

1BY OR 2BY WOOD BUCKS BY OTHERS, MUST BE ANCHORED PROPERLY TO TRANSFER LOADS TO THE STRUCTURE.

ANCHORS SHALL BE AS LISTED, SPACED AS SHOWN ON DETAILS, ANCHORS EMBEDMENT TO BASE MATERIAL SHALL BE BEYOND WALL DRESSING OR STUCCO.

ANCHORING OR LOADING CONDITIONS NOT SHOWN IN THESE DETAILS ARE NOT PART OF THIS APPROVAL.

A LOAD DURATION INCREASE IS USED IN DESIGN OF ANCHORS INTO WOOD ONLY.

MATERIALS INCLUDING BUT NOT LIMITED TO STEEL/METAL SCREWS, THAT COME INTO CONTACT WITH OTHER DISSIMILAR MATERIALS SHALL MEET THE REQUIREMENTS OF THE FLORIDA BLDG. CODE SECTION 2003.8.4.

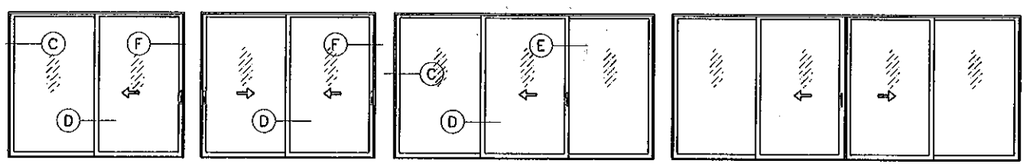

OX OR XO — XX — OXO — OXXO

APPROVED CONFIGURATIONS

DAYLITE OPENINGS:
D.L.O. HEIGHT = DOOR HEIGHT – 7.125"
D.L.O. WIDTH (FIX. PANEL) = PANEL WIDTH – 5.575"
D.L.O. WIDTH (OPER. PANEL) = PANEL WIDTH – 5.675"

Engr: JAVAD AHMAD
CIVIL
FLA. PE # 70592
C.A.N. 3538

PRODUCT REVISED
as complying with the Florida Building Code
Acceptance No 12-0507.06
Expiration Date 7/3/2013
By _____
Miami Dade Product Control

MAY 02 2012

AL-FAROOQ CORPORATION
ENGINEERS & PRODUCT DEVELOPMENT
1235 S.W. 87 AVE
MIAMI, FLORIDA 33174
TEL. (305) 264-8100 FAX. (305) 262-6978
COMP-ANL\W02-117TMW

SERIES-350 ALUM. SLIDING GLASS DOOR (S.M.I.)

T.M. WINDOWS LLC.
601 N.W. 12TH AVE.
POMPANO BEACH, FL. 33069
TEL. (954) 781-4430 FAX. (954) 781-5078

revisions:

no	date	by	description
A	06.29.07		UPDATED FOR 2004 FBC
B	04.04.08		REV. PER BCCO COMMENTS
C	05.02.08		REV. PER BCCO COMMENTS
D	03.13.12		UPDATED TO 2010 FBC

date: 12-19-02
scale: 1/2"=1'-0"
dr. by: HAMID
chk. by:

drawing no.
W02-117

DESIGN LOAD CAPACITY – PSF
DOORS W/O HEAD RECEPTOR
REINFORCING 'A'
(CHANNELS IN BOTTOM RAILS NOT REQD.)

PANEL WIDTH INCHES	DOOR HEIGHT INCHES	ANCHORS TYPE 'A'		ANCHORS TYPE 'B'		ANCHORS TYPE 'F'	
		EXT.(+)	INT.(–)	EXT.(+)	INT.(–)	EXT.(+)	INT.(–)
24	80	100.0	120.0	100.0	120.0	100.0	120.0
30		100.0	120.0	100.0	120.0	100.0	120.0
36		100.0	120.0	100.0	120.0	100.0	120.0
42		100.0	120.0	100.0	120.0	100.0	120.0
48		100.0	120.0	100.0	120.0	100.0	120.0
24	84	100.0	120.0	100.0	120.0	100.0	120.0
30		100.0	120.0	100.0	120.0	100.0	120.0
36		100.0	120.0	100.0	120.0	100.0	120.0
42		100.0	120.0	100.0	120.0	100.0	120.0
24	90	100.0	120.0	100.0	120.0	100.0	120.0
30		100.0	120.0	100.0	120.0	100.0	120.0
36		100.0	120.0	100.0	120.0	100.0	120.0
42		100.0	120.0	100.0	120.0	100.0	120.0
24	96	100.0	120.0	100.0	120.0	100.0	120.0
30		100.0	120.0	100.0	120.0	100.0	120.0
36		100.0	120.0	100.0	120.0	100.0	120.0
24	102	100.0	120.0	100.0	120.0	100.0	120.0
30		100.0	120.0	100.0	120.0	100.0	120.0
36		100.0	120.0	100.0	120.0	100.0	120.0
24	108–1/4	100.0	120.0	100.0	120.0	100.0	120.0
30		100.0	120.0	100.0	120.0	100.0	120.0
36		100.0	120.0	100.0	120.0	100.0	120.0

DESIGN LOAD CAPACITY – PSF
DOORS W/O HEAD RECEPTOR
REINFORCING 'B'
(1 ALUMINUM CHANNEL IN EACH MOVING PANEL BOTTOM RAIL)

PANEL WIDTH INCHES	DOOR HEIGHT INCHES	ANCHORS TYPE 'A'		ANCHORS TYPE 'B'		ANCHORS TYPE 'F'	
		EXT.(+)	INT.(–)	EXT.(+)	INT.(–)	EXT.(+)	INT.(–)
24	80	100.0	120.0	100.0	120.0	100.0	120.0
30		100.0	120.0	100.0	120.0	100.0	120.0
36		100.0	120.0	100.0	120.0	100.0	120.0
42		100.0	120.0	100.0	120.0	100.0	120.0
48		100.0	120.0	100.0	120.0	100.0	120.0
54		100.0	120.0	100.0	120.0	100.0	120.0
24	84	100.0	120.0	100.0	120.0	100.0	120.0
30		100.0	120.0	100.0	120.0	100.0	120.0
36		100.0	120.0	100.0	120.0	100.0	120.0
42		100.0	120.0	100.0	120.0	100.0	120.0
48		100.0	120.0	100.0	120.0	100.0	120.0
54		100.0	120.0	100.0	120.0	100.0	120.0
24	90	100.0	120.0	100.0	120.0	100.0	120.0
30		100.0	120.0	100.0	120.0	100.0	120.0
36		100.0	120.0	100.0	120.0	100.0	120.0
42		100.0	120.0	100.0	120.0	100.0	120.0
48		100.0	120.0	100.0	120.0	100.0	120.0
24	96–1/4	100.0	120.0	100.0	120.0	100.0	120.0
30		100.0	120.0	100.0	120.0	100.0	120.0
36		100.0	120.0	100.0	120.0	100.0	120.0
42		100.0	120.0	100.0	120.0	100.0	120.0
48		100.0	117.2	100.0	120.0	100.0	120.0

DESIGN LOAD CAPACITY – PSF
DOORS W/O HEAD RECEPTOR
REINFORCING 'C'
(2 STEEL CHANNELS IN MOVING PANEL BOTTOM RAIL)

PANEL WIDTH INCHES	DOOR HEIGHT INCHES	ANCHORS TYPE 'A'		ANCHORS TYPE 'B'		ANCHORS TYPE 'F'	
		EXT.(+)	INT.(–)	EXT.(+)	INT.(–)	EXT.(+)	INT.(–)
24	80	100.0	120.0	100.0	120.0	100.0	120.0
30		100.0	120.0	100.0	120.0	100.0	120.0
36		100.0	120.0	100.0	120.0	100.0	120.0
42		100.0	120.0	100.0	120.0	100.0	120.0
48		100.0	120.0	100.0	120.0	100.0	120.0
54		100.0	120.0	100.0	120.0	100.0	120.0
60		100.0	116.3	100.0	120.0	100.0	120.0
24	84	100.0	120.0	100.0	120.0	100.0	120.0
30		100.0	120.0	100.0	120.0	100.0	120.0
36		100.0	120.0	100.0	120.0	100.0	120.0
42		100.0	120.0	100.0	120.0	100.0	120.0
48		100.0	120.0	100.0	120.0	100.0	120.0
54		100.0	120.0	100.0	120.0	100.0	120.0
60		100.0	116.3	100.0	120.0	100.0	120.0
24	90	100.0	120.0	100.0	120.0	100.0	120.0
30		100.0	120.0	100.0	120.0	100.0	120.0
36		100.0	120.0	100.0	120.0	100.0	120.0
42		100.0	120.0	100.0	120.0	100.0	120.0
48		100.0	120.0	100.0	120.0	100.0	120.0
54		100.0	111.4	100.0	120.0	100.0	120.0
24	96	100.0	120.0	100.0	120.0	100.0	120.0
30		100.0	120.0	100.0	120.0	100.0	120.0
36		100.0	120.0	100.0	120.0	100.0	120.0
42		100.0	120.0	100.0	120.0	100.0	120.0
48		100.0	117.5	100.0	120.0	100.0	120.0
54		100.0	104.4	100.0	120.0	100.0	120.0
24	102	100.0	120.0	100.0	120.0	100.0	120.0
30		100.0	120.0	100.0	120.0	100.0	120.0
36		100.0	120.0	100.0	120.0	100.0	120.0
42		100.0	120.0	100.0	120.0	100.0	120.0
48		100.0	110.6	100.0	120.0	100.0	120.0
24	108–1/4	100.0	120.0	100.0	120.0	100.0	120.0
30		100.0	120.0	100.0	120.0	100.0	120.0
36		100.0	120.0	100.0	120.0	100.0	120.0
42		100.0	119.1	100.0	120.0	100.0	120.0
48		100.0	104.2	100.0	120.0	100.0	120.0

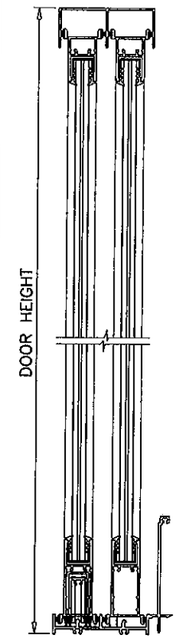

DOOR HEIGHTS
W/O HEAD RECEPTOR.

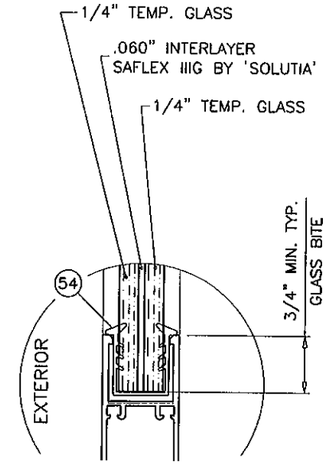

GLASS TYPE 'A'

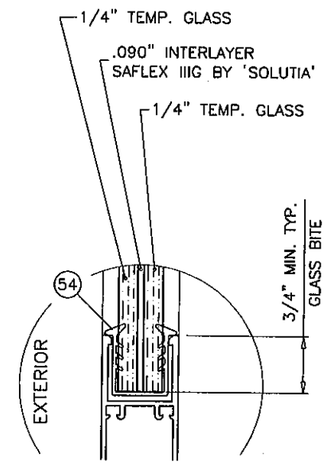

GLASS TYPE 'B'

GLAZING OPTIONS

ALL EXTERIOR(+) LOADS SHOWN ON THIS SHEET ARE
FOR DOORS USING 4–1/8" SILL HEIGHTS.
FOR DOORS USING 3–1/2" SILL HEIGHTS LIMIT
EXT.(+) LOADS TO 90.0 PSF.

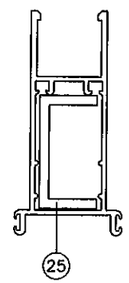

MOV. PANEL BOTTOM RAIL
REINFORCING 'B'

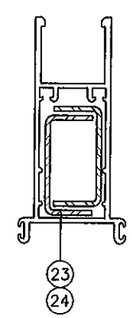

MOV. PANEL BOTTOM RAIL
REINFORCING 'C'

NOTE:
GLASS CAPACITIES ON THIS SHEET ARE
BASED ON ASTM E1300–04 (3 SEC. GUSTS)
AND FLORIDA BUILDING COMMISSION
DECLARATORY STATEMENT DCA05–DEC–219

TYPICAL ANCHORS: SEE ELEV. FOR SPACING

ANCHORS WITHOUT HEAD RECEPTOR

TYPE 'A' 1/4" DIA. ULTRACON BY 'ELCO' (Fu=177 KSI, Fy=155 KSI)
INTO 2BY WOOD BUCKS OR WOOD STRUCTURES
1–3/8" MIN. PENETRATION INTO WOOD

THRU 1BY BUCKS INTO CONC. OR MASONRY
1–1/4" MIN. EMBED INTO CONC. OR MASONRY

TYPE 'B' 1/4" DIA. ULTRACON BY 'ELCO' (Fu=177 KSI, Fy=155 KSI)
DIRECTLY INTO CONC. OR MASONRY
1–1/4" MIN. EMBED INTO CONC. OR MASONRY

TYPE 'F' #14 SMS OR SELF DRILLING SCREWS (GRADE 2 CRS)
INTO MIAMI–DADE COUNTY APPROVED MULLIONS (MIN. THK. = 1/8")

INTO METAL STRUCTURES
STEEL : 12 GA. MIN. (Fy = 36 KSI MIN.)
ALUMINUM : 1/8" THK. MIN. (6063–T5 MIN.)
(STEEL IN CONTACT WITH ALUMINUM TO BE PLATED OR PAINTED)

TYPICAL EDGE DISTANCE
INTO CONCRETE AND MASONRY = 2–1/2" MIN.
INTO WOOD STRUCTURE = 1" MIN.
INTO METAL STRUCTURE = 3/4" MIN.

CONCRETE AT HEAD, SILL OR JAMBS f'c = 3000 PSI MIN.
C–90 HOLLOW/FILLED BLOCK AT JAMBS f'm = 2000 PSI MIN.

DOORS W/O HEAD RECEPTOR
CLUSTER OF 6 ANCHORS AT STILE ENDS AT HEAD & SILL

Engr: JAVAD AHMAD
CIVIL
FLA. PE # 70592
C.A.N. 3538

MAY 02 2012

PRODUCT REVISED
as complying with the Florida
Building Code
Acceptance No 12-0507.06
Expiration Date 7/3/2013
By
Miami Dade Product Control

AL-FAROOQ CORPORATION
ENGINEERS & PRODUCT DEVELOPMENT
1235 S.W. 87 AVE
MIAMI, FLORIDA 33174
TEL. (305) 264-8100 FAX. (305) 262-6978
COMP-ANL\WO2-117TMW

SERIES-350 ALUM. SLIDING GLASS DOOR (S.M.I.)

T.M. WINDOWS LLC.
601 N.W. 12TH AVE.
POMPANO BEACH, FL. 33069
TEL. (954) 781-4430 FAX. (954) 781-5078

revisions:

no	date	by	description
A	06.29.07		UPDATED FOR 2004 FBC
B	04.04.08		REV. PER BCCO COMMENTS
C	05.02.08		REV. PER BCCO COMMENTS
D	03.13.12		UPDATED TO 2010 FBC

date: 12-19-02
scale: 1/2" = 1"
dr. by: HAMID
chk. by:

drawing no.
W02-117

DESIGN LOAD CAPACITY – PSF
DOORS WITH HEAD RECEPTOR
REINFORCING 'A'
(CHANNELS IN BOTTOM RAILS NOT REQD.)

PANEL WIDTH INCHES	DOOR HEIGHT INCHES	ANCHORS TYPE 'C' EXT.(+)	ANCHORS TYPE 'C' INT.(−)	ANCHORS TYPE 'D' EXT.(+)	ANCHORS TYPE 'D' INT.(−)	ANCHORS TYPE 'E' EXT.(+)	ANCHORS TYPE 'E' INT.(−)
24	80	100.0	210.0	100.0	210.0	100.0	210.0
30		100.0	210.0	100.0	210.0	100.0	210.0
36		100.0	200.0	100.0	210.0	100.0	210.0
42		100.0	210.0	100.0	210.0	100.0	210.0
48		100.0	186.8	100.0	210.0	100.0	210.0
24	84	100.0	210.0	100.0	210.0	100.0	210.0
30		100.0	210.0	100.0	210.0	100.0	210.0
36		100.0	210.0	100.0	210.0	100.0	210.0
42		100.0	203.3	100.0	210.0	100.0	210.0
24	90	100.0	210.0	100.0	210.0	100.0	210.0
30		100.0	210.0	100.0	210.0	100.0	210.0
36		100.0	210.0	100.0	210.0	100.0	210.0
42		100.0	189.7	100.0	210.0	100.0	210.0
24	96	100.0	209.5	100.0	210.0	100.0	210.0
30		100.0	209.5	100.0	210.0	100.0	210.0
36		100.0	207.5	100.0	210.0	100.0	210.0
24	102	100.0	195.3	100.0	210.0	100.0	210.0
30		100.0	195.3	100.0	210.0	100.0	210.0
36		100.0	195.3	100.0	210.0	100.0	210.0
24	108-1/4	100.0	184.0	100.0	210.0	100.0	210.0
30		100.0	184.0	100.0	210.0	100.0	210.0
36		100.0	184.0	100.0	210.0	100.0	210.0

DESIGN LOAD CAPACITY – PSF
DOORS WITH HEAD RECEPTOR
REINFORCING 'B'
(1 ALUMINUM CHANNEL IN EACH MOVING PANEL BOTTOM RAIL)

PANEL WIDTH INCHES	DOOR HEIGHT INCHES	ANCHORS TYPE 'C' EXT.(+)	ANCHORS TYPE 'C' INT.(−)	ANCHORS TYPE 'D' EXT.(+)	ANCHORS TYPE 'D' INT.(−)	ANCHORS TYPE 'E' EXT.(+)	ANCHORS TYPE 'E' INT.(−)
24	80	100.0	210.0	100.0	210.0	100.0	210.0
30		100.0	210.0	100.0	210.0	100.0	210.0
36		100.0	210.0	100.0	210.0	100.0	210.0
42		100.0	210.0	100.0	210.0	100.0	210.0
48		100.0	186.8	100.0	210.0	100.0	210.0
54		100.0	166.0	100.0	210.0	100.0	210.0
24	84	100.0	210.0	100.0	210.0	100.0	210.0
30		100.0	210.0	100.0	210.0	100.0	210.0
36		100.0	210.0	100.0	210.0	100.0	210.0
42		100.0	203.3	100.0	210.0	100.0	210.0
48		100.0	177.9	100.0	210.0	100.0	210.0
54		100.0	158.1	100.0	210.0	100.0	210.0
24	90	100.0	210.0	100.0	210.0	100.0	210.0
30		100.0	210.0	100.0	210.0	100.0	210.0
36		100.0	210.0	100.0	210.0	100.0	210.0
42		100.0	189.7	100.0	210.0	100.0	210.0
48		100.0	166.0	100.0	197.0	100.0	197.3
24	96-1/4	100.0	207.0	100.0	210.0	100.0	210.0
30		100.0	207.0	100.0	210.0	100.0	210.0
36		100.0	207.0	100.0	210.0	100.0	210.0
42		100.0	177.4	100.0	210.0	100.0	210.0
48		100.0	155.2	100.0	207.2	100.0	207.6

DESIGN LOAD CAPACITY – PSF
DOORS WITH HEAD RECEPTOR
REINFORCING 'C'
(2 STEEL CHANNELS IN MOVING PANEL BOTTOM RAIL)

PANEL WIDTH INCHES	DOOR HEIGHT INCHES	ANCHORS TYPE 'C' EXT.(+)	ANCHORS TYPE 'C' INT.(−)	ANCHORS TYPE 'D' EXT.(+)	ANCHORS TYPE 'D' INT.(−)	ANCHORS TYPE 'E' EXT.(+)	ANCHORS TYPE 'E' INT.(−)
24	80	100.0	130.0	100.0	130.0	100.0	130.0
30		100.0	130.0	100.0	130.0	100.0	130.0
36		100.0	130.0	100.0	130.0	100.0	130.0
42		100.0	130.0	100.0	130.0	100.0	130.0
48		100.0	130.0	100.0	130.0	100.0	130.0
54		100.0	130.0	100.0	130.0	100.0	130.0
60		100.0	130.0	100.0	130.0	100.0	130.0
24	84	100.0	130.0	100.0	130.0	100.0	130.0
30		100.0	130.0	100.0	130.0	100.0	130.0
36		100.0	130.0	100.0	130.0	100.0	130.0
42		100.0	130.0	100.0	130.0	100.0	130.0
48		100.0	130.0	100.0	130.0	100.0	130.0
54		100.0	130.0	100.0	130.0	100.0	130.0
60		100.0	130.0	100.0	130.0	100.0	130.0
24	90	100.0	130.0	100.0	130.0	100.0	130.0
30		100.0	130.0	100.0	130.0	100.0	130.0
36		100.0	130.0	100.0	130.0	100.0	130.0
42		100.0	130.0	100.0	130.0	100.0	130.0
48		100.0	130.0	100.0	130.0	100.0	130.0
54		100.0	130.0	100.0	130.0	100.0	130.0
24	96	100.0	130.0	100.0	130.0	100.0	130.0
30		100.0	130.0	100.0	130.0	100.0	130.0
36		100.0	130.0	100.0	130.0	100.0	130.0
42		100.0	130.0	100.0	130.0	100.0	130.0
48		100.0	130.0	100.0	130.0	100.0	130.0
54		100.0	130.0	100.0	130.0	100.0	130.0
24	102	100.0	130.0	100.0	130.0	100.0	130.0
30		100.0	130.0	100.0	130.0	100.0	130.0
36		100.0	130.0	100.0	130.0	100.0	130.0
42		100.0	130.0	100.0	130.0	100.0	130.0
48		100.0	130.0	100.0	130.0	100.0	130.0
24	108-1/4	100.0	130.0	100.0	130.0	100.0	130.0
30		100.0	130.0	100.0	130.0	100.0	130.0
36		100.0	130.0	100.0	130.0	100.0	130.0
42		100.0	130.0	100.0	130.0	100.0	130.0
48		100.0	130.0	100.0	130.0	100.0	130.0

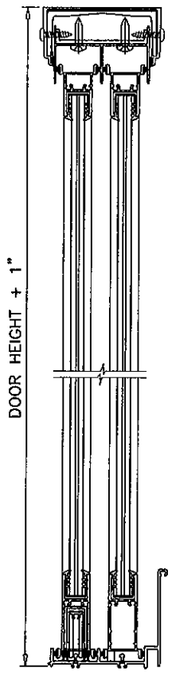

CHARTS AT LEFT ARE FOR DOOR HEIGHTS WITHOUT HEAD RECEPTOR.
DOORS USING HEAD RECEPTOR MAY BE 1" HIGHER THAN SHOWN (SEE SKETCH)

ALL EXTERIOR(+) LOADS SHOWN ON THIS SHEET ARE FOR DOORS USING 4-1/8" SILL HEIGHTS.
FOR DOORS USING 3-1/2" SILL HEIGHTS LIMIT EXT.(+) LOADS TO 90.0 PSF.

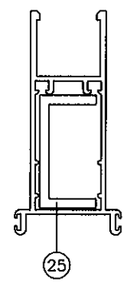

MOV. PANEL BOTTOM RAIL REINFORCING 'B'

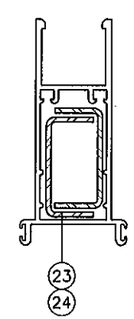

MOV. PANEL BOTTOM RAIL REINFORCING 'C'

ANCHORS WITHOUT HEAD RECEPTOR

TYPICAL ANCHORS: SEE ELEV. FOR SPACING

TYPE 'C' 1/4" DIA. ULTRACON BY 'ELCO' (Fu=177 KSI, Fy=155 KSI)
INTO 2BY WOOD BUCKS OR WOOD STRUCTURES
1-3/8" MIN. PENETRATION INTO WOOD

THRU 1BY BUCKS INTO CONC. OR MASONRY
1-1/4" MIN. EMBED INTO CONC. OR MASONRY

TYPE 'D' 1/4" DIA. ULTRACON BY 'ELCO' (Fu=177 KSI, Fy=155 KSI)
DIRECTLY INTO CONC. OR MASONRY
1-1/4" MIN. EMBED INTO CONC. OR MASONRY

TYPE 'E' #14 SMS OR SELF DRILLING SCREWS (GRADE 2 CRS)
INTO MIAMI-DADE COUNTY APPROVED MULLIONS (MIN. THK. = 1/8")

INTO METAL STRUCTURES
STEEL : 12 GA. MIN. (Fy = 36 KSI MIN.)
ALUMINUM : 1/8" THK. MIN. (6063-T5 MIN.)
(STEEL IN CONTACT WITH ALUMINUM TO BE PLATED OR PAINTED)

TYPICAL EDGE DISTANCE
INTO CONCRETE AND MASONRY = 2-1/2" MIN.
INTO WOOD STRUCTURE = 1" MIN.
INTO METAL STRUCTURE = 3/4" MIN.

CONCRETE AT HEAD, SILL OR JAMBS f'c = 3000 PSI MIN.
C-90 HOLLOW/FILLED BLOCK AT JAMBS f'm = 2000 PSI MIN.

NOTE:
GLASS CAPACITIES ON THIS SHEET ARE BASED ON ASTM E1300-04 (3 SEC. GUSTS) AND FLORIDA BUILDING COMMISSION DECLARATORY STATEMENT DCA05-DEC-219

DOORS WITH HEAD RECEPTOR
CLUSTER OF 8 ANCHORS AT STILE ENDS AT HEAD
CLUSTER OF 6 ANCHORS AT STILE ENDS AT SILL

Engr: JAVAD AHMAD
CIVIL
FLA. PE # 70592
C.A.N. 3538

MAY 02 2012

PRODUCT REVISED
as complying with the Florida Building Code
Acceptance No. 12-0507.06
Expiration Date 7/3/2013
By
Miami Dade Product Control

AL-FAROOQ CORPORATION
ENGINEERS & PRODUCT DEVELOPMENT
1235 S.W. 87 AVE
MIAMI, FLORIDA 33174
TEL (305) 264-8100 FAX. (305) 262-6978
COMP-ANL\W02-117TMW

SERIES-350 ALUM. SLIDING GLASS DOOR (S.M.I.)

T.M. WINDOWS LLC.
601 N.W. 12TH AVE.
POMPANO BEACH, FL. 33069
TEL. (954) 781-4430 FAX. (954) 781-5078

revisions:

no	date	by	description
A	06.29.07		UPDATED FOR 2004 FBC
B	04.04.08		REV. PER BCCO COMMENTS
C	05.02.08		REV. PER BCCO COMMENTS
D	03.13.12		UPDATED TO 2010 FBC

date: 12-19-02
scale: 1/2" = 1"
dr. by: HAMID
chk. by:

drawing no. W02-117

sheet 3 of 7

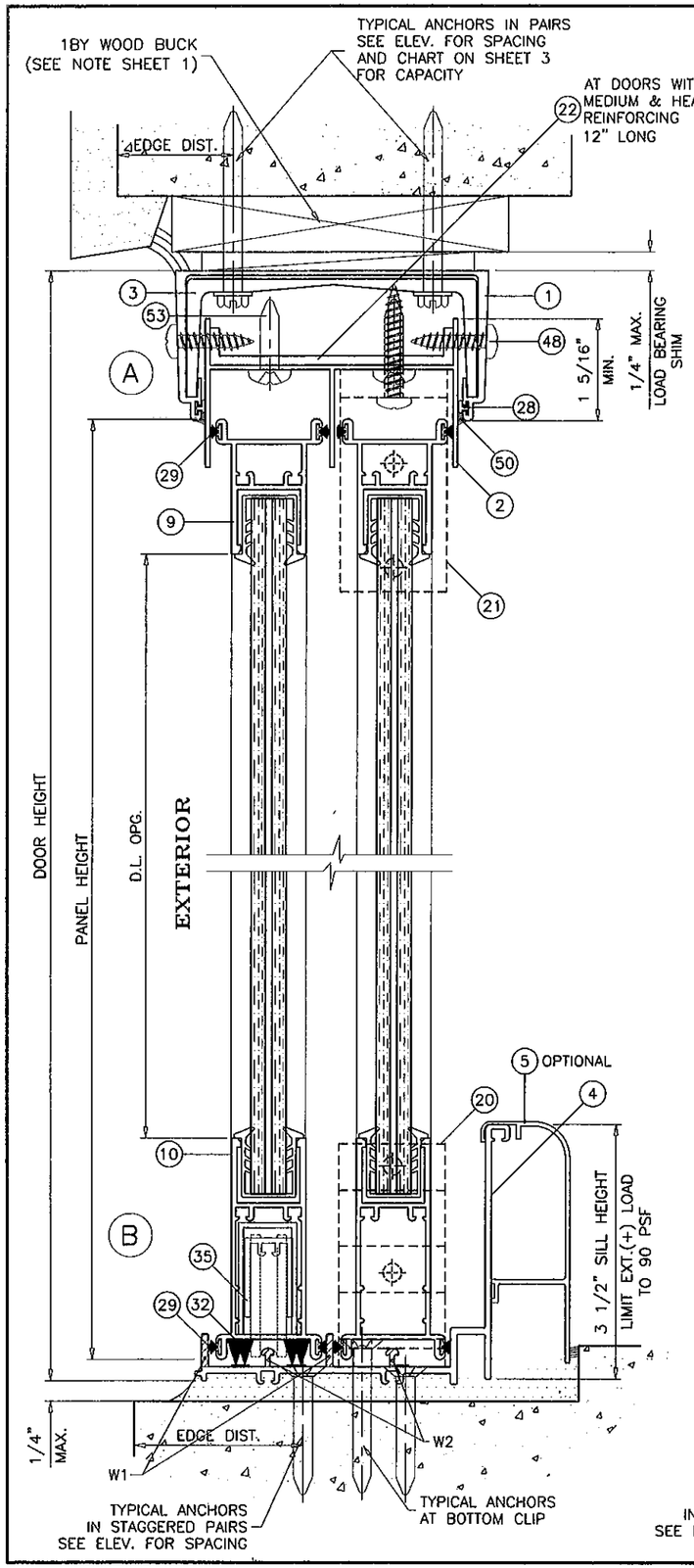

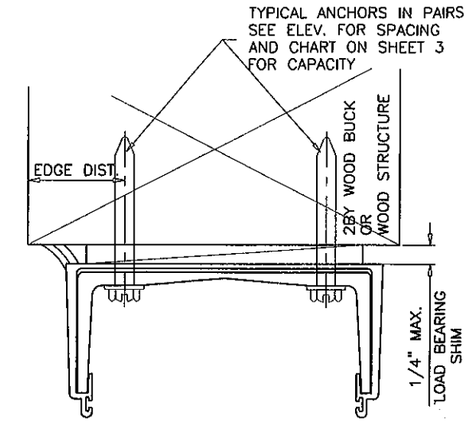

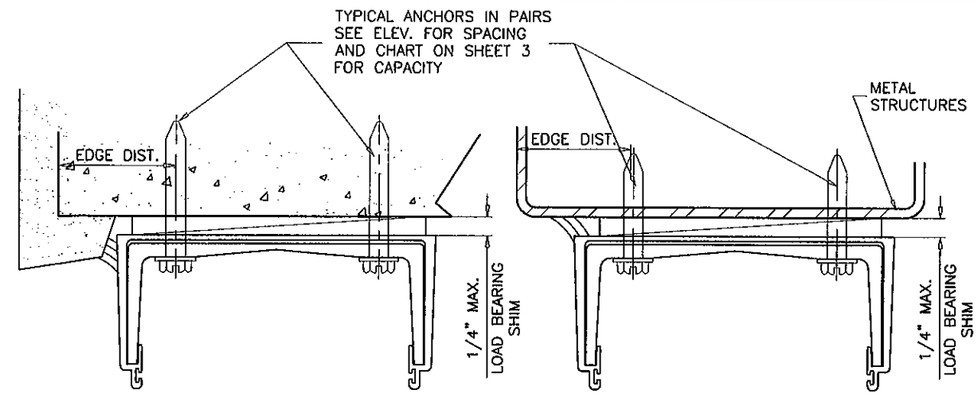

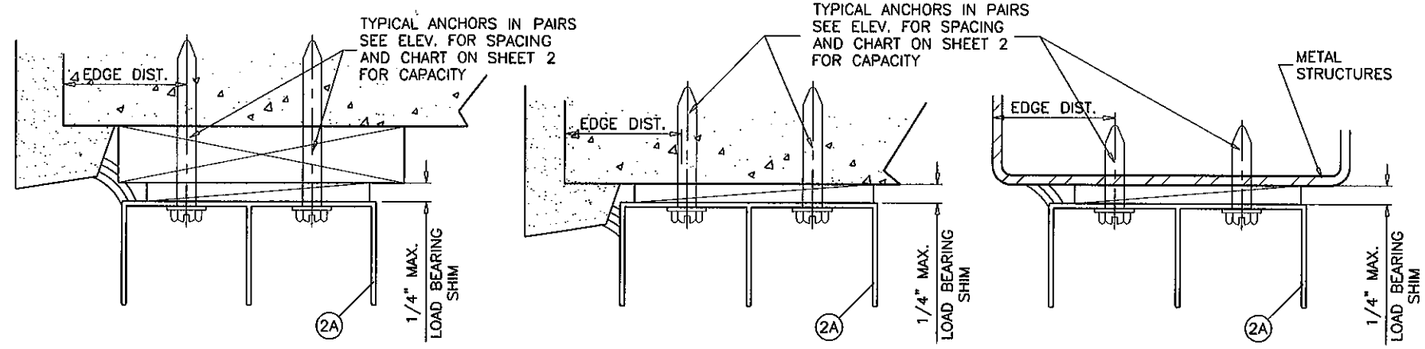

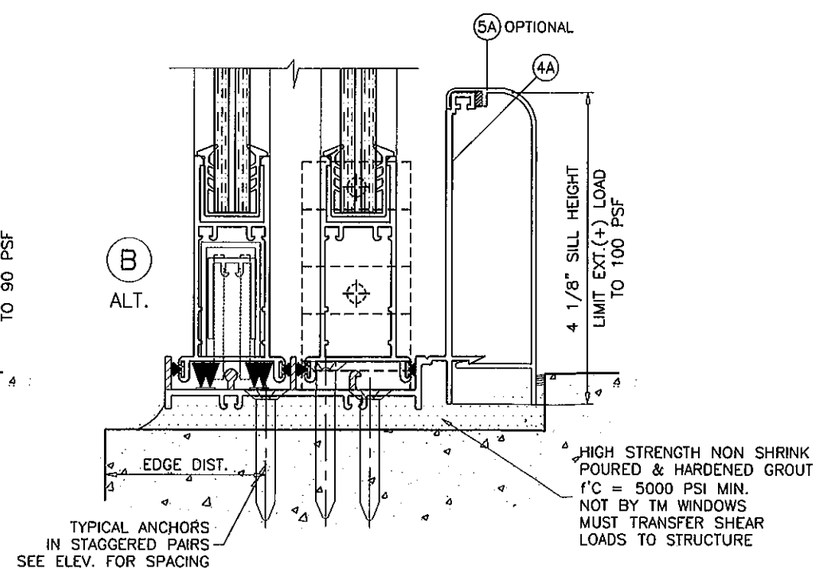

WOOD BUCKS AND METAL STRUCTURE NOT BY TM WINDOWS MUST SUSTAIN LOADS IMPOSED BY GLAZING SYSTEM AND TRANSFER THEM TO THE BUILDING STRUCTURE.

SEALANTS:

FIXED PANEL STILE TO FRAME, PANEL AND FRAME CORNERS AND HEAD RECEPTOR TO FRAME SEALED WITH CLEAR COLORED SILICONE.

WEEPHOLES:

W1 = (4) 1" WEEP NOTCH
ONE AT EACH END OF EACH PANEL

W2 = (4) 3/8" WEEP NOTCH
ONE AT EACH END OF EACH PANEL

Engr: JAVAD AHMAD
CIVIL
FLA. PE # 70592
C.A.N. 3538

MAY 02 2012

PRODUCT REVISED
as complying with the Florida Building Code
Acceptance No 12-0507.06
Expiration Date 7/3/2013
By
Miami Dade Product Control

AL-FAROOQ CORPORATION
ENGINEERS & PRODUCT DEVELOPMENT
1235 S.W. 87 AVE
MIAMI, FLORIDA 33174
TEL (305) 264-8100 FAX. (305) 262-6978
COMP-ANL\W02-117TMW

SERIES-350 ALUM. SLIDING GLASS DOOR (S.M.I.)

T.M. WINDOWS LLC.
601 N.W. 12TH AVE.
POMPANO BEACH, FL. 33069
TEL. (954) 781-4430 FAX. (954) 781-5078

revisions:

no	date	by	description
A	06.29.07		UPDATED FOR 2004 FBC
B	04.04.08		REV. PER BCCO COMMENTS
C	05.02.08		REV. PER BCCO COMMENTS
D	03.13.12		UPDATED TO 2010 FBC

date: 12-19-02
scale: 1/2" = 1"
dr. by: HAMID
chk. by:

drawing no.
W02-117

sheet 4 of 7

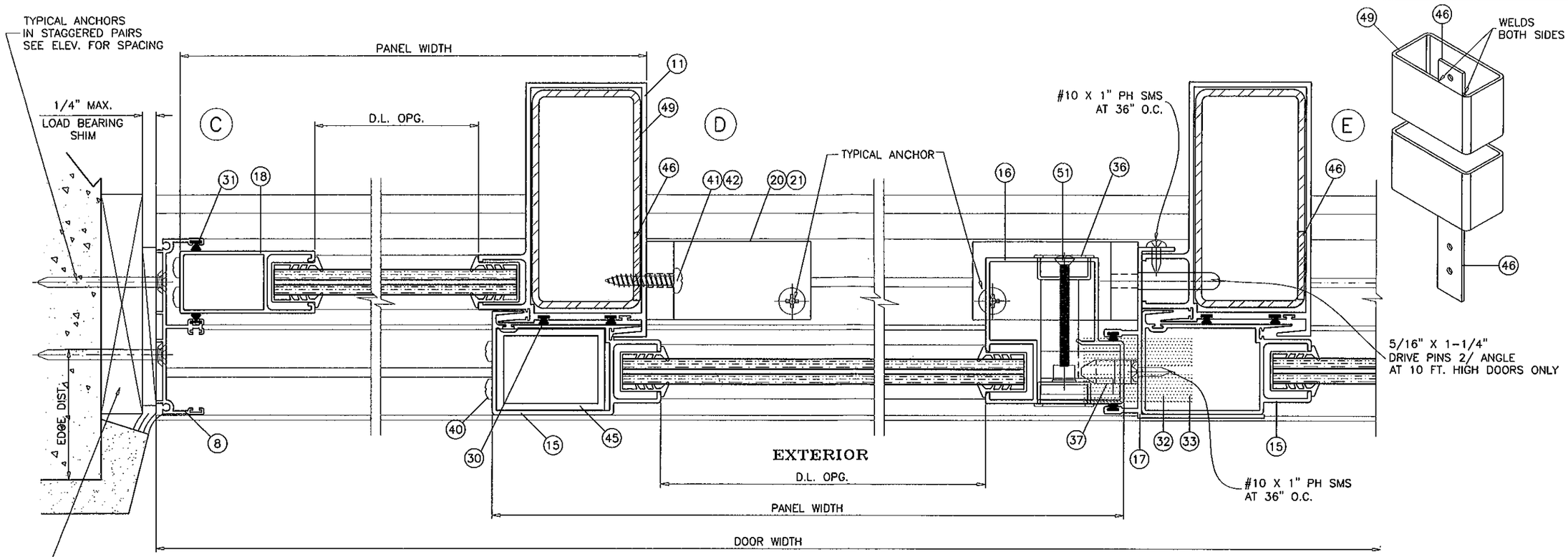

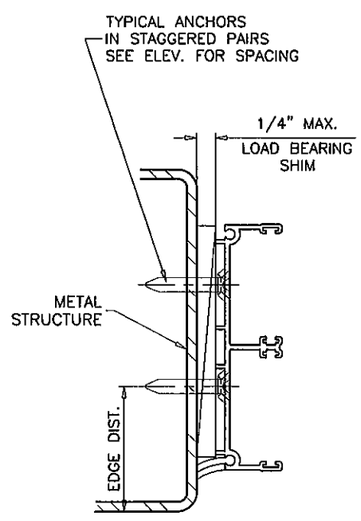

ATTACHMENT TO METAL STRUCTURES
STEEL OR ALUMINUM

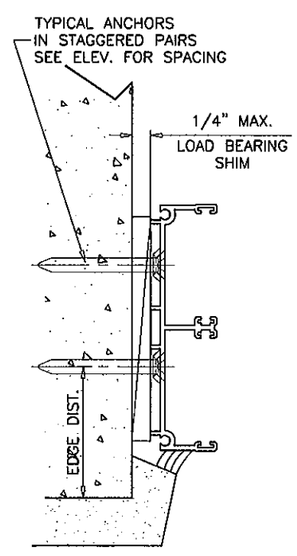

ATTACHMENT TO CONCRETE
OR CONC. BLOCK

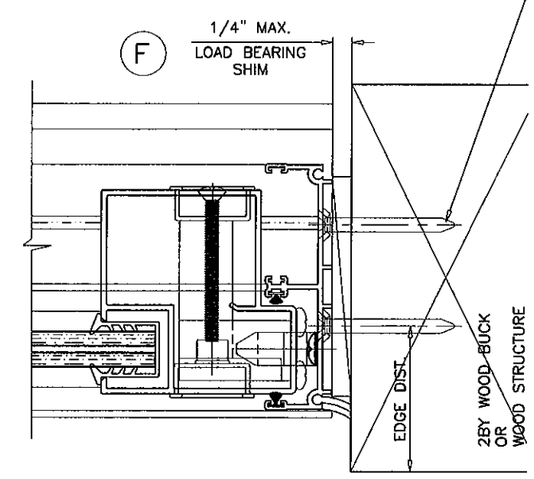

Engr: JAVAD AHMAD
CIVIL
FLA. PE # 70592
C.A.N. 3538

MAY 02 2012

PRODUCT REVISED
as complying with the Florida Building Code
Acceptance No 12-0507.06
Expiration Date 7/3/2013
By _____
Miami Dade Product Control

AL-FAROOQ CORPORATION
ENGINEERS & PRODUCT DEVELOPMENT
1235 S.W. 87 AVE
MIAMI, FLORIDA 33174
TEL. (305) 264-8100 FAX. (305) 262-6978
COMP-ANL\WO2-117TMW

SERIES-350 ALUM. SLIDING GLASS DOOR (S.M.I.)

T.M. WINDOWS LLC.
601 N.W. 12TH AVE.
POMPANO BEACH, FL. 33069
TEL. (954) 781-4430 FAX. (954) 781-5078

revisions:

no	date	by	description
A	06.29.07		UPDATED FOR 2004 FBC
B	04.04.08		REV. PER BCCO COMMENTS
C	05.02.08		REV. PER BCCO COMMENTS
D	03.13.12		UPDATED TO 2010 FBC

date: 12-19-02
scale: 1/2" = 1"
dr. by: HAMID
chk. by:

drawing no.
W02-117

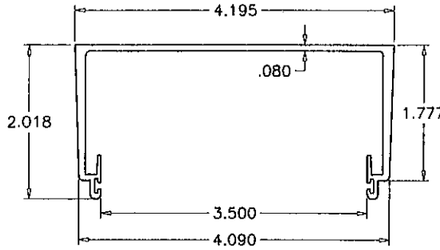

HEAD RECEPTOR
GW 37654

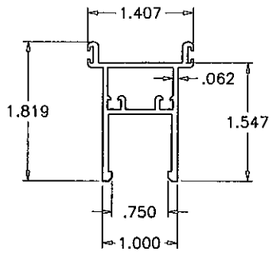

PANEL TOP RAIL
GW 37632

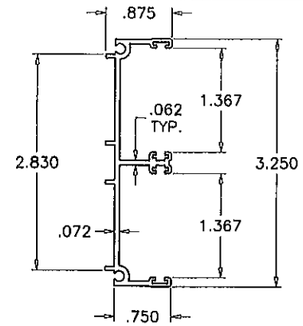

DOOR FRAME JAMB
GW 34977

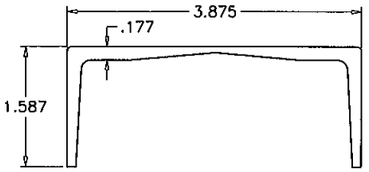

HEAD REINFORCING CHANNEL
GW 37655

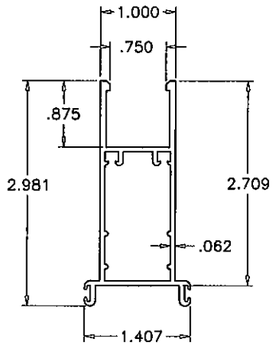

PANEL BOTTOM RAIL
GW 37624

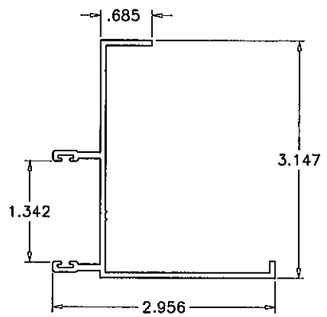

STILE ADAPTER
GW 37629

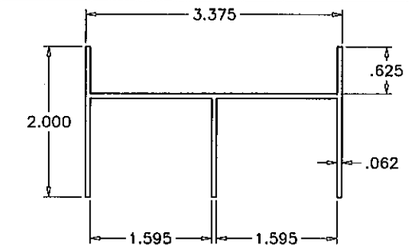

FRAME HEAD
GW 30710

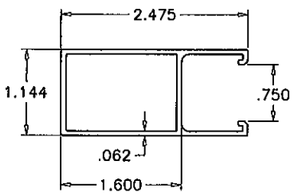

LOCK STILE
GW 37637

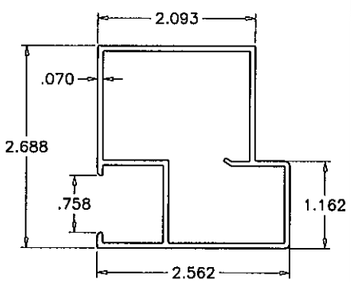

MALE BUTT STILE
GW 37623

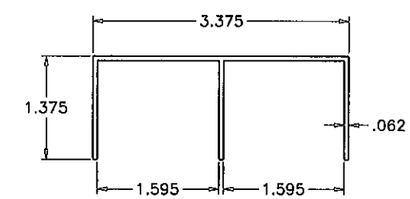

FRAME HEAD (OPTIONAL)
GW 32096

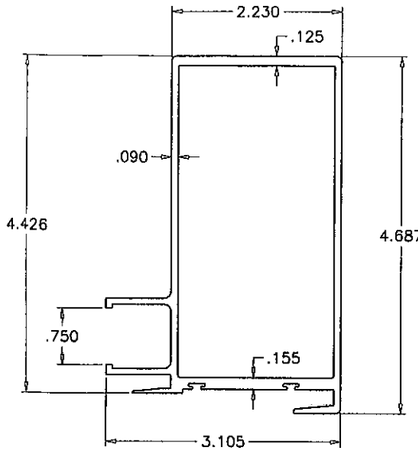

2"x4" MAJOR INTERLOCK
GW 37630A (OPTIONAL)

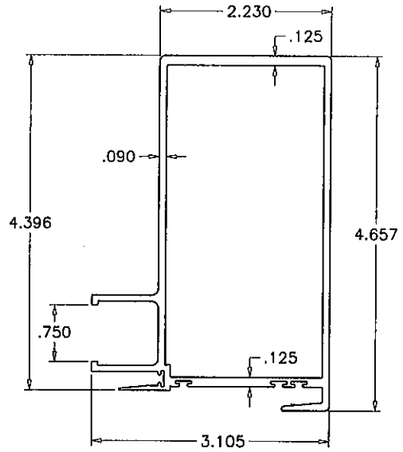

2"x4" MAJOR INTERLOCK
GW 37630

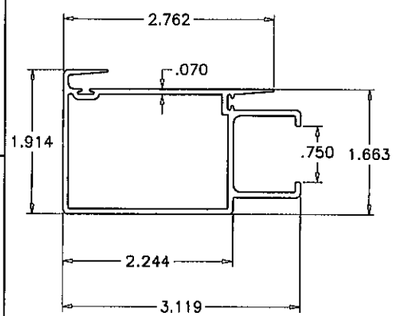

MINOR INTERLOCK
GW 37625

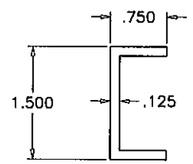

BOTT. RAIL ALUMINUM REINF. CHANNEL

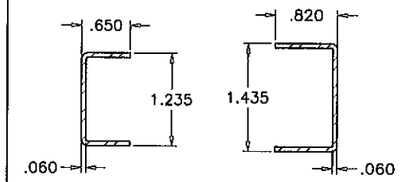

BOTT. RAIL STEEL REINF. CHANNELS

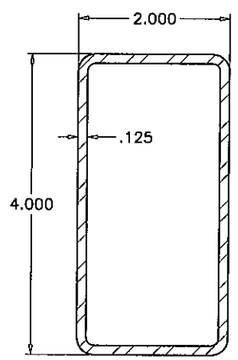

INTERLOCK/ASTRAGAL
REINFORCING

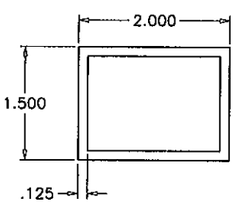

INTERLOCK REINFORCING

HARDNESS = 75 SHORE A
TENSILE STRENGTH (100% STRAIN) = 730 PSI
TENSILE STRENGTH (BREAK) = 1460 PSI
ELONGATION AT BREAK = 390%
SPECIFIC GRAVITY = 1.51

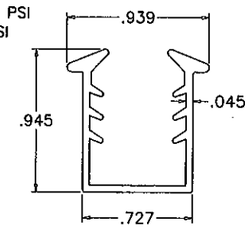

GLAZING GASKET
SCALE 1:1

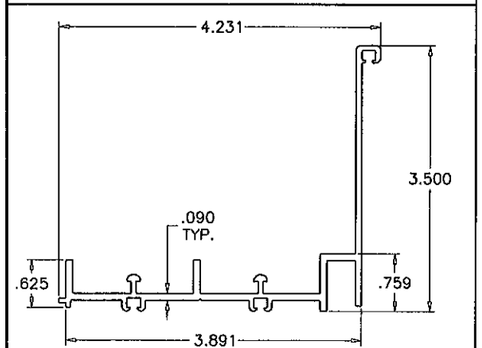

FRAME SILL
GW 37557

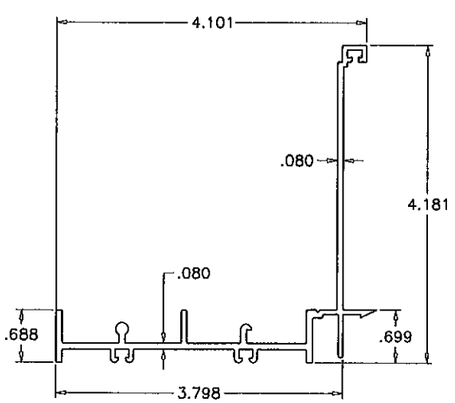

FRAME SILL (OPTIONAL)
TM-067

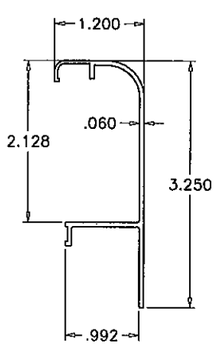

SILL COVER
TM-095

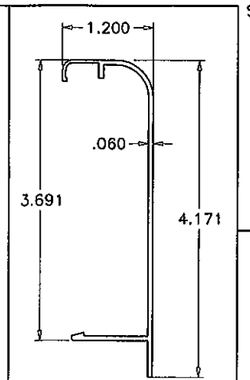

SILL COVER
TM-074

Engr: JAVAD AHMAD
CIVIL
FLA. PE # 70592
C.A.N. 3538

MAY 09 2013

PRODUCT REVISED
as complying with the Florida Building Code
Acceptance No 12-0507.06
Expiration Date 7/3/2013
By
Miami Dade Product Control

AL-FAROOQ CORPORATION
ENGINEERS & PRODUCT DEVELOPMENT
1235 S.W. 87 AVE
MIAMI, FLORIDA 33174
TEL. (305) 264-8100 FAX. (305) 262-6978
COMP-ANL\W02-117.MW

SERIES-350 ALUM. SLIDING GLASS DOOR (S.M.I.)

T.M. WINDOWS LLC.
601 N.W. 12TH AVE.
POMPANO BEACH, FL. 33069
TEL. (954) 781-4430 FAX. (954) 781-5078

revisions:

no	date	by	description
A	06.29.07		UPDATED FOR 2004 FBC
B	04.04.08		REV. PER BCCO COMMENTS
C	05.02.08		REV. PER BCCO COMMENTS
D	03.13.12		UPDATED TO 2010 FBC

date: 12-19-02
scale: 1/2" = 1"
dr. by: HAMID
chk. by:

drawing no.
W02-117

sheet 6 of 7

ITEM	PART #	QUANTITY	DESCRIPTION	MATERIAL	MANF./SUPPLIER/REMARKS
1	GW 37654	1	HEAD RECEPTOR	ALUM-6063 T6	FRAME TOP
2	GW 30710	1	FRAME HEAD	ALUM-6063 T5	FRAME TOP
2A	GW 32096	1	FRAME HEAD (OPTIONAL)	ALUM-6063 T6	FRAME TOP
3	GW 37655	6	HEAD RECEPTOR REINFORCEMENT (6" LONG)	ALUM-6063 T6	AT HEAD ENDS & CENTER LINE OF PANELS
3A	GW 37655	3	HEAD RECEPTOR REINFORCEMENT (14" LONG)	ALUM-6063 T6	AT ASTRAGAL & INTERLOCK LOCATIONS
4	GW 37557	1	3 1/2" SILL	ALUM-6063 T6	FRAME BOTTOM
4A	TM-067	1	4 1/4" SILL	ALUM-6063 T6	FRAME BOTTOM
5	TM-095	1	DECORATIVE SILL COVER (OPTIONAL)	ALUM-6063 T5	FRAME BOTTOM
5A	TM-074	1	DECORATIVE SILL COVER (OPTIONAL)	ALUM-6063 T5	FRAME BOTTOM
8	GW 34977	2	FRAME JAMB (TWO TRACKS)	ALUM-6063 T6	FRAME SIDE
9	GW 37632	4	TOP RAIL	ALUM-6063 T6	PANEL TOP
10	GW 37624	4	BOTTOM RAIL	ALUM-6063 T6	PANEL BOTTOM
11	GW 37630	2	2"X4" MAJOR INTERLOCK	ALUM-6063 T6	PANEL SIDES
15	GW 37625	2	MINOR INTERLOCK	ALUM-6063 T5	PANEL SIDES
16	GW 37623	1	MALE BUTT STILE	ALUM-6063 T6	PANEL ASTRAGAL
17	GW 37629	1	STILE ADAPTER	ALUM-6063 T5	PANEL ASTRAGAL
18	GW 37637	2	LOCK STILE	ALUM-6063 T6	PANEL SIDES
20	FXD 37743	2	BOTTOM CLIP (3x3x1/4x1 7/16" LG. ANGLE)	ALUMINUM	FRAME SILL
21	TP 37743	2	TOP CLIP (3x3x1/4x1 7/16" LG. ANGLE)	ALUMINUM	FRAME HEAD
22	–	3	3 1/4" X 1/2" X 1/8" X 12" LG. REINF. CHANNEL	ALUMINUM	ABOVE INTERLOCKS & ASTRAGAL STILES
23	–	AS REQD.	.820" X 1.435" X .06" THK. CHANNEL	STEEL	IN BOTTOM RAIL
24	–	AS REQD.	.650" X 1.235" X .060" THK. CHANNEL	STEEL	IN BOTTOM RAIL
25	–	AS REQD.	.750" X 1.500" X .125" THK. CHANNEL	ALUMINUM	IN BOTTOM RAIL
28	WV-3033	AS REQ'D	BULB TYPE VINYL	VINYL	HEAD RECEPTOR
29	4020-PILE	SINGLE ROW	"ULTRAFAB" FIN SEAL WEATHERSTRIP	WOOL	TOP & BOTTOM RAILS
30	4037-PILE	2/ROWS	"ULTRAFAB" FIN SEAL WEATHERSTRIP	WOOL	INTERIOR INTERLOCKS STILES
31	4020-PILE	SINGLE ROW	"ULTRAFAB" FIN SEAL WEATHERSTRIP	WOOL	FRAME JAMB/ASTRAGAL
32	–	2	1/2" x 2" LONG SELF ADHESIVE PILE PAD	WOOL	AT FRAME SILL
33	–	1	7/8" x 3" LONG SELF ADHESIVE PILE PAD	WOOL	AT FRAME HEAD
35	TM-36205	4	TM TANDEM ROLLER ASSEMBLY	ALUMINUM/NYLON	BOTTOM ACTIVE PANELS
36	TM-32476	1	TM LATCH ASSEMBLY	ALUMINUM/VINYL	MALE ASTRAGAL
37	TM-32424	1	TM KEEPER	ALUMINUM	FEMALE ASTRAGAL
39	–	2	#8 X 1/2" OH. SMS. – KEEPER INST. SCREW	STEEL	FEMALE ASTRAGAL
40	–	8/PANEL	#10 X 1" PH. SMS. – PANEL ASSEMBLY SCREW	STEEL	PANEL CORNERS
41	–	(2/CLIP)	#14 X 1-1/4" PH. SMS. – FIXED PANEL CLIP	STEEL	TOP/BOTTOM CLIPS/STILES
42	–	1/CLIP	#14 X 1-1/2" PH. SMS. –TOP FIXED CLIP	STEEL	HEAD TOP INTERLOCK
45	–	AS REQD.	1 1/2 x 2 x 1/8 REINF. TUBE	ALUMINUM	–
46	–	–	1/1/4" X 1/8" BAR, 3-1/4" LONG AT SILL & 1" LONG AT HAED	STEEL	–
48	–	6	#14 x 1" PH. SMS.	STEEL	AT 50" O.C.
49	–	3	2 X 4 X 1/8" REINFORCEMENT TUBE (LENGTH = PANEL HT. – 8")	HR STEEL	MAJOR INTERLOCK/ASTRAGAL
50	–	AS REQ'D	SILICONE CAP (DOW 995)	SILICONE	FRAME/HEAD RECEPTOR
51	–	2/LATCH	#10 X 2" OH. MS. – ASSEMBLY SCREW	STEEL	LATCH ASSEMBLY
53	–	4/CHANNEL	#14 X 1-1/2" PH. SMS.	STEEL	AT HEAD ALUM. CHANNEL
54	WV-1348	AS REQD.	GLAZING GASKET	VINYL	AMERICAN VINYL CO.

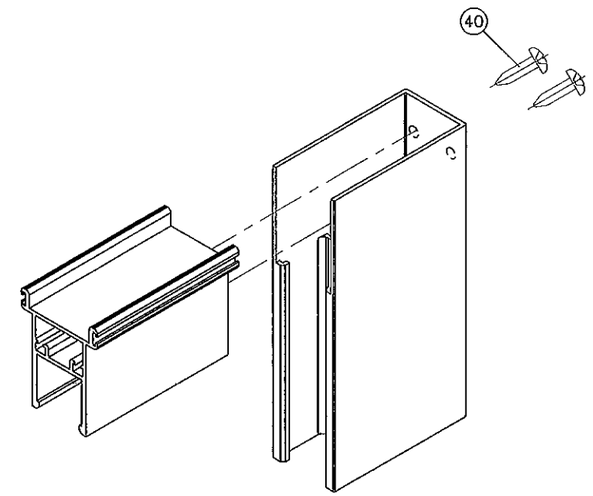

PANEL TOP CORNER

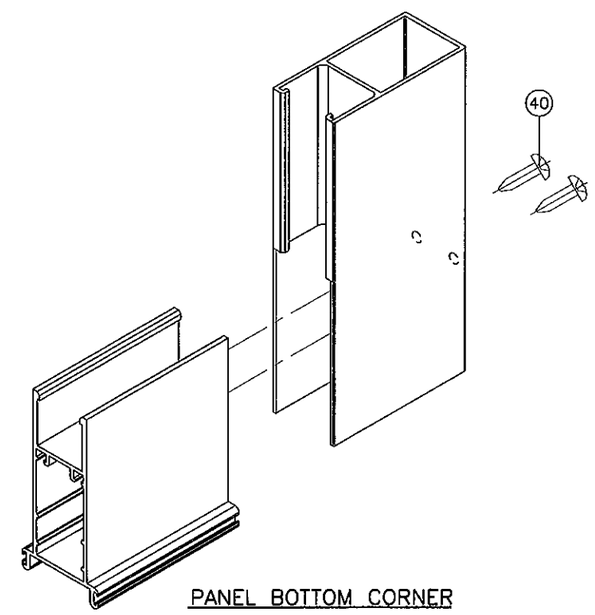

PANEL BOTTOM CORNER

LOCKS:

2 POINT FLUSH MOUNT HOOK LOCK AT MOVING PANEL LOCK STILE
42-1/2" FROM BOTTOM FASTENED WITH (2) #10 X 2-1/2" OH MS.
(2) SURFACE MOUNT ALUMINUM KEEPERS FACING LOCK AT 35-1/2"
AND 50" FROM BOTTOM EACH FASTENED WITH (2) #10 X 1" FH SMS.

BUILDING CODE
COMPLIANCE DEPARTMENT
APPROVED

Engr: JAVAD AHMAD
CIVIL
FLA. PE # 70592
C.A.N. 3538

MAY 02 2012

PRODUCT REVISED
as complying with the Florida Building Code
Acceptance No 12-0507.06
Expiration Date 7/3/2013
By
Miami Dade Product Control

AL-FAROOQ CORPORATION
ENGINEERS & PRODUCT DEVELOPMENT
1235 S.W. 87 AVE
MIAMI, FLORIDA 33174
TEL. (305) 264-8100 FAX. (305) 262-6978
COMP-ANL\W02-117TMW

SERIES-350 ALUM. SLIDING GLASS DOOR (S.M.L.)

T.M. WINDOWS LLC.
601 N.W. 12TH AVE.
POMPANO BEACH, FL. 33069
TEL. (954) 781-4430 FAX. (954) 781-5078

(revisions:

no	date	by	description
A	06.29.07		UPDATED FOR 2004 FBC
B	04.04.08		REV. PER BCCO COMMENTS
C	05.02.08		REV. PER BCCO COMMENTS
D	03.13.12		UPDATED TO 2010 FBC

date: 12-19-02
scale: 1/2" = 1"
dr. by: HAMID
chk. by:

drawing no.
W02-117

sheet 7 of 7