MIAMI-DADE COUNTY
PRODUCT CONTROL SECTION
11805 SW 26 Street, Room 208
Miami, Florida 33175-2474
T (786) 315-2590 F (786) 315-2599
www.miamidade.gov/economy

DEPARTMENT OF REGULATORY AND ECONOMIC RESOURCES (RER)
BOARD AND CODE ADMINISTRATION DIVISION

NOTICE OF ACCEPTANCE (NOA)

Montecarlo Doors, Inc.
4440 PGA Blvd, Suite #600
Palm Beach Garden, FL 33410

SCOPE:

This NOA is being issued under the applicable rules and regulations governing the use of construction materials. The documentation submitted has been reviewed and accepted by Miami-Dade County RER -Product Control Section to be used in Miami Dade County and other areas where allowed by the Authority Having Jurisdiction (AHJ).

This NOA shall not be valid after the expiration date stated below. The Miami-Dade County Product Control Section (In Miami Dade County) and/or the AHJ (in areas other than Miami Dade County) reserve the right to have this product or material tested for quality assurance purposes. If this product or material fails to perform in the accepted manner, the manufacturer will incur the expense of such testing and the AHJ may immediately revoke, modify, or suspend the use of such product or material within their jurisdiction. RER reserves the right to revoke this acceptance, if it is determined by Miami-Dade County Product Control Section that this product or material fails to meet the requirements of the applicable building code.

This product is approved as described herein, and has been designed to comply with the Florida Building Code, including the High Velocity Hurricane Zone.

DESCRIPTION: "Montecarlo" Series Outswing glazed Wood Doors-L.M.I.

APPROVAL DOCUMENT: Drawing No. **H582-0907-11G**, titled "Mahogany Outswing Entrance Doors (L.M.I.)", sheets 1 through 10 of 10, dated APR 04, 2013, prepared by Wolters Engineering Inc., signed and sealed by Scott Wolters, P.E., bearing the Miami-Dade County Product Control Approval stamp with the Notice of Acceptance number and approval date by the Miami-Dade County Product Control Section.

MISSILE IMPACT RATING: Large and Small Missile Impact Resistant

Limitations:

1. Door may be mulled (See sheet 8) to Montecarlo Transom or Sidelites (under separate approvals), lower design pressure of door or Transom or door or Sidelites may control.
2. All anchors at door headers and jambs are in double rows. See Meeting Stiles anchor clusters in sheets 3 & 10.

LABELING: Each unit shall bear a permanent label with the manufacturer name or logo, **Medelin, Colombia** and series and following statement: "Miami-Dade County Product Control Approved", noted herein.

RENEWAL of this NOA shall be considered after a renewal application has been filed and there has been no change in the applicable building code negatively affecting the performance of this product.

TERMINATION of this NOA will occur after the expiration date or if there has been a revision or change in the materials, use, and/or manufacture of the product or process. Misuse of this NOA as an endorsement of any product, for sales, advertising or any other purposes shall automatically terminate this NOA. Failure to comply with any section of this NOA shall be cause for termination and removal of NOA.

ADVERTISEMENT: The NOA number preceded by the words Miami-Dade County, Florida, and followed by the expiration date may be displayed in advertising literature. If any portion of the NOA is displayed, then it shall be done in its entirety.

INSPECTION: A copy of this entire NOA shall be provided to the user by the manufacturer or its distributors and shall be available for inspection at the job site at the request of the Building Official.

This NOA consists of this page 1 and evidence pages E-1, as well as approval document mentioned above.

The submitted documentation was reviewed by **Ishaq I. Chanda, P.E.**

MIAMI-DADE COUNTY APPROVED

4/5/13

NOTICE OF ACCEPTANCE: EVIDENCE SUBMITTED

A. DRAWINGS

1. Manufacturer's parts drawings and sections
2. Drawing No. **H582-0907-11G**, titled "Mahogany Outswing Entrance Doors (L.M.I.)", sheets 1 through 10 of 10, dated APR 04, 2013, prepared by Wolters Engineering Inc., signed and sealed by Scott Wolters, P. E.

B. TESTS

1. Test reports on: 1) Air Infiltration Test, per FBC, TAS 202-94
   2) Uniform Static Air Pressure Test, Loading per FBC TAS 202-94
   3) Water Resistance Test, per FBC, TAS 202-94
   4) Large Missile Impact Test per FBC, TAS 201-94
   5) Cyclic Wind Pressure Loading per FBC, TAS 203-94
   6) Forced Entry Test, per FBC 2411 3.2.1, TAS 202-94

   along with marked-up drawings and installation diagram of outswing wood glass door w/ Transom and Outswing wood doors w/sidelites, Half Round and Arch shapes double opaque/glazed doors & shaped glazed wood transoms , prepared by Hurricane Testing Lab, LLC, Test Report No. **HTL-0582-0402-11**, dated 10/31/11 and revised on 11/19/12, signed and sealed by Vinu J. Abraham, P. E. (Hurricane Testing Lab, now has been acquired by Architectural Testing)
   Note: This test report has been revised by an addendum letter dated Jan 31, 2013, issued by Architectural Testing, signed and sealed by Vinu J. Abraham, P. E.

C. CALCULATIONS

1. Anchor verification calculations and structural analysis, complying with FBC-2010, prepared by Wolters Engineering Inc., dated May 04, 2012 and last revised on DEC 07, 2012, signed and sealed by Scott Wolters, P. E.
2. Glazing complies w/ ASTME-1300-02 & -04

D. QUALITY ASSURANCE

1. Miami Dade Department of Regulatory and Economic Resources (RER).

E. MATERIAL CERTIFICATIONS

1. Notice of Acceptance No. **11-0624.02** issued to E.I. DuPont DeNemours & Co., Inc. for their "**DuPont Sentry Glass ®**", expiring on 01/14/17.
2. Notice of Acceptance No. **08-0709.04** issued to Nebula Glass Int'l. dba Glasslam for their "**Safety Plus II ®**", expiring on 08/17/13.

F. STATEMENTS

1. Statement letter of conformance and letter of no financial interest, dated May 04, 2012, prepared by Wolters Engineering Inc., signed and sealed by Scott Wolters, P. E.
2. Lab compliance as part of the above referenced test report, including letter dated August 24, 2011, issued by Hurricane Testing Lab.

G. OTHER

1. Test proposal, dated Sep 23, 2010 approved by BCCO.
2. Distribution agreement dated April 11, 2012 between Maderas De Occidente, Colombia(manufacturer) and Montecarlo Doors, Inc, USA (distributor), signed by Ms. Adriana Maria Velez Posad and Juan D. Gomez, respectively on behalf of their companies.

Ishaq I. Chanda

Ishaq I. Chanda, P.E.
Product Control Examiner
NOA No. 12-0509.02
Expiration Date: April 04, 2018
Approval Date: April 04, 2013

MATERIALS LIST

1. HEAD AND JAMB RABBETED & KERFED MAHOGANY
   A. 1 3/16" X 5 1/4" HEAD - ARCH TOP AND EYEBROW, MAHOGANY AND PLYWOOD
   B. 1 1/4" X 5 1/4" TYPICAL HEAD AND JAMB, SOLID MAHOGANY
2. ACTIVE LEAF LOCKING HARDWARE OPTIONS:
   A. HOPPE HLS9000 5-POINT MULTIPOINT DOOR BOLT SYSTEM WITH LEVER HANDLE & STRIKE AT 36" ABOVE BASE OF DOOR AND SHOOT BOLT MORTISED INTO DOOR PANEL WITH TOP AND BOTTOM STRIKES.
   B. CONVENTIONAL SCHLAGE B60N 619 CYLINDER LOCK & DEAD BOLT @ 36" & 48 1/2" ABOVE BASE OF DOOR (WITH 3B FLUSH BOLTS AT TOP & BOTTOM).
3. INACTIVE LEAF FLUSH BOLT OPTIONS:
   A. HOPPE DOUBLE ACTING FLUSH BOLT WITH TOP & BOTTOM STRIKES
   B. HAGER 6 3/4" MANUAL FLUSH BOLTS AT THE TOP AND BOTTOM OF DOOR WITH TOP & BOTTOM STRIKES
4. HAGER #1193 SOLID BRASS BALL BEARING HINGES 4 1/2" X 4 1/2" X 3/32" THICK
5. STRIKES: HEAD AND SILL STRIKE PLATE 1/8" THICK STEEL 2" X 6 3/8".
6. GLASS: SEE GLAZING DETAILS ON SHEET 2.
7. 5 3/4" X 1 5/8" 6063 - T5 - ALUMINUM BUMPER THRESHOLD.
8. 2"x6"x1/8" ALUMINUM 6063-T6 MULLION WITH 6"x8"x1/4" CONT. FILLET WELDED END PLATES.
9. 2 5/8" x 5 1/4" COMPOSITE MAHOGANY STILE.
10. RAILS:
    A. NOT USED
    B. 5" X 2 3/8" COMPOSITE MAHOGANY MEETING RAIL
    C. 5 1/4" X 2 1/4" COMPOSITE MAHOGANY TOP RAIL
    D. NOT USED
    E. 10 1/2" X 2 5/16" COMPOSITE MAHOGANY TYPICAL BOTTOM RAIL.
    F. 5 1/4" X 2 1/4" SOLID MAHOGANY TOP RAIL - ARCH.
    G. NOT USED
11. GLASS STOP: 5/8" X 1" SOLID MAHOGANY
12. ASTRAGALS:
    A. TYPICAL ASTRAGAL: 2" X 4 5/8" PLYWOOD AND MAHOGANY WITH 2 1/4" RABBET ON INACTIVE SIDE AND 2 5/8" RABBET ON ACTIVE SIDE.
    B. EXTERIOR ASTRAGAL: 3 3/16" X 5/8" SOLID MAHOGANY.
13. WEATHER STRIP:
    A. 5/8" Q-LON QDS-650.
    B. PILE WEATHERSTRIPPING: 1/4" FINSEAL WITH 5/8" HIGH PILE.
    C. MD BUILDING PRODUCTS ALL CLIMATE WEATHERSTRIPPING TAPE #63628.
14. TOP / BOTTOM DOOR GUIDE REINFORCING: 1/8" THK. STAINLESS STEEL.
    A. TYPICAL 10 1/2" X 1 1/2" AT TOP AND BOTTOM OF EACH DOOR.
    B. CONTINUOUS REINFORCING FROM THE END OF THE TOP 14A TO 75" FROM THE BOTTOM OF THE DOOR, FASTENED AT 5" o/c WITH PART #21. (REQUIRED AT ARCH-TOP DOORS ONLY).
15. 5/8" X 6" MAHOGANY DOWEL.
16. DOW CORNING 995 SILICONE.
17. 4d X 1 1/2" FINISHING NAIL 1" FROM CORNERS AND SPACED 2 1/2" O.C. FASTENING GLASS STOPS TO PANELS.
18. NOT USED
19. NOT USED
20. No. 10 x 2 1/2" PFHSMS (3 PER CORNER). TYP.
21. No. 10 x 2" PFHSMS FASTENING REINF. TO DOOR RAIL.
22. No. 10 x 3/4" PFHSMS FASTENING STRIKE PLATE TO HEAD AND THRESHOLD. (2 PER PLATE)
23. No. 12 x 3" PFHSMS FASTENING STRIKE PLATE TO HEAD/THRESHOLD & BUCK. (SCREWS PENETRATE THROUGH HEAD/THRESHOLD & INTO SUBSTRATE 1 1/2"). 2 PER PLATE.
24. NOT USED
25. NOT USED.
26. No. 10 x 2" PFHSMS ASTRAGAL (1" FROM EACH END, BALANCE @ 10" o/c, STAGGERED.)
27. No. 12 x 1" PFHSMS FASTENING HINGE TO JAMB (2 PER HINGE)
28. No. 12 x 2 3/4" PFHSMS FASTENING HINGE TO JAMB (2 PER HINGE), FASTENERS MUST PENETRATE MIN. 1 1/4" INTO WOOD.
29. No. 12 x 1 1/4" PFHSMS FASTENING HINGE TO PANELS. (4 PER HINGES)
30. NOT USED
31. 1/4" x 3 3/4" PFHSMS WITH 2 1/4" EMBED INTO WOOD, POSITIONED AS SHOWN ON ELEVATION VIEWS AND SECTIONS
32. No. 12 x 3 1/4" PFHSMS 2 1/4" EMBED.
33. NOT USED
34. NOT USED
35. 1/4" x 2 3/4" PFHSDSMS FASTNEING JAMBS AND DS MAX 8" O.C. TO MULLION.
36. PERIMETER SEALANT: SIKAFLEX 15 LM.
37. FULL LENGTH 3/4"x2"x0.090" ALUMINUM CHANNEL AT THRESHOLD FASTENERS. SEE ANCHOR CONDITIONS ON SHEET 10.
38. WOOD SPECIES: CARAPA GUIANENSIS MAHOGANY.
39. PLYWOOD: CDX PLYWOOD.

GENERAL NOTES, MAHOGANY OUTSWING ENTRANCE DOORS, LARGE MISSILE IMPACT:

1. THIS APPROVAL APPLIES TO SINGLE (X) AND DOUBLE (XX) LEAF IMPACT RESISTANT OUTSWING MAHOGANY DOORS WITH OR WITHOUT DIRECT-SET SIDELITES OR TRANSOMS (SEE SEPARATE MONTECARLO APPROVAL FOR DIRECT-SET FIXED LITES).
   ANY COMBINATION OF SINGLE DOORS, DOUBLE DOORS, AND/OR DIRECT-SET SIDELITES MAY BE MULLED TOGETHER WITH 2x6x1/8" MULLIONS WITH WELDED END PLATES AS SHOWN HEREIN.
2. ALLOWABLE DESIGN PRESSURE: +/-50 PSF
3. ALL GLAZING AS SHOWN IN DETAILS A/2 AND B/2, AND ALL HARDWARE TYPES IN THE MATERIALS LIST TO THE LEFT MAY BE USED IN ANY DOOR CONFIGURATION SHOWN ON SHEET 2 PER DLO LIMITATION.
4. DIRECT-SET TRANSOM (SEE SEPARATE MONTECARLO APPROVAL) MAY BE MULLED OVER X OR XX DOORS ONLY. TRANSOM CANNOT BE USED OVER SIDELITE OR OVER DOOR-SIDELITE ASSEMBLIES. ANY SHAPE DIRECT SET TRANSOM MAY BE USED.
5. THESE DOORS HAVE BEEN DESIGNED AND TESTED TO TAS 201, 202, AND 203 PROTOCOLS IN ACCORDANCE WITH THE REQUIREMENTS OF THE FLORIDA BUILDING CODE (FBC) INCLUDING THE HIGH VELOCITY HURRICANE ZONE.
6. THIS PRODUCT AS SHOWN HEREIN IS LARGE AND SMALL MISSILE IMPACT RATED, SHUTTERS ARE NOT REQUIRED.
7. 1x OR 2x WOOD OR MASONRY OPENINGS, BUCKS, AND BUCK FASTENERS, BY OTHERS, SHALL BE PROPERLY DESIGNED AND INSTALLED TO TRANSFER LOADS TO THE STRUCTURE.
8. ANCHOR TYPE, SIZE, SPACING, AND EMBEDMENT SHALL BE AS INDICATED IN THIS APPROVAL. ANCHOR EMBEDMENT TO SUBSTRATE SHALL BE BEYOND WALL DRESSING OR STUCCO.
9. ALL FASTENERS PENETRATING INTO PRESSURE TREATED WOOD SHALL BE CAPABLE OF PREVENTING CORROSION DUE TO REACTION WITH PRESSURE TREATMENT CHEMICALS.
10. DISSIMILAR MATERIALS THAT COME INTO CONTACT SHALL BE PROTECTED TO PREVENT REACTIONS IN ACCORDANCE WITH FBC CHAPTERS 20 AND 23.
11. A WIND LOAD DURATION FACTOR Cd = 1.6 WAS USED FOR THE ANALYSIS OF WOOD SCREWS ONLY.
12. THE MAHOGANY DOORS LISTED IN THIS APPROVAL ARE CONSTRUCTED OF A NATURALLY DURABLE SPECIES IN COMPLIANCE WITH FBC SECT. 2326.2.1. OTHER NATURALLY DURABLE WOOD SPECIES OF EQUAL OR GREATER DENSITY MAY BE SUBSTITUTED FOR ALL WOOD COMPONENTS.
13. COMPOSITE MEMBERS ARE FORMED BY JOINING PIECES AS SHOWN IN PART DRAWINGS WITH TITEBOND II FRANKLIN INTERNATIONAL WOOD GLUE.
14. MEMBERS NOTCHED AS NEEDED TO FIT HARDWARE.
15. ALL HARDWARE SEALED WITH CLEAR GE SILICONE I WINDOW AND DOOR CAULK.
16. WOOD SPECIES: CARAPA GUIANENSIS MAHOGANY.
17. PLYWOOD: CDX PLYWOOD.

ALLOWABLE
DESIGN PRESSURE:
+50 / -50 PSF

EXAMPLE ALLOWABLE CONFIGURATIONS AND MAX. LIMIT SIZES (SEE GEN. NOTE 1 ABOVE) SEE SHEETS 3-5 FOR SIZE LIMITATIONS.
NOTE: 'X' UNITS ARE ACTIVE OR INACTIVE DOOR PANELS AND MAY SWING LEFT OR RIGHT. 'O' UNITS ARE OPTIONAL DIRECT SET FIXED LITE TRANSOMS OR SIDELITES, NOT PART OF THIS APPROVAL.

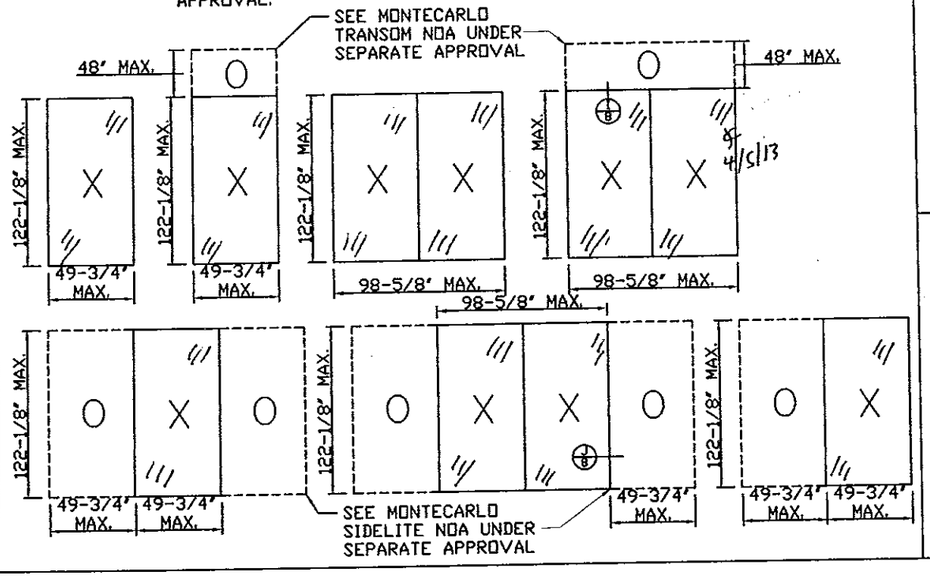

REV.	DATE	DESCRIPTION	BY
D	10/12/2011	ORIGINAL RELEASE	LAT
1	11/9/2012	SHOW ONLY GLAZING & ADD -G TO TITLE	AWR

Mahogany Outswing Entrance Doors
Large Missile Impact

Approved as complying with the Florida Building Code
Date APR 04 2013
NOA# 12-0509.02
Miami Dade Product Control
By

SCOTT WOLTERS
(FLPE# 62354)

WOLTERS ENGINEERING, INC.
(COA# 27194)
5358 SW 32ND TERRACE
FT. LAUDERDALE, FL 33312

APR 04 2013

Montecarlo Doors
4440 PGA Boulevard, Suite 600
Palm Beach Gardens, FL 33410
PHONE: 561.623.5303
FAX: 561.594.1720
www.montecarlodoors.com

DRAWING #: H582-0907-11-G
SCALE: NTS

GLAZING / PANEL COMBINATION CONFIGURATIONS (TRUE MUNTINS (MID-RAIL) USED FOR DIVIDED GLASS LITES)

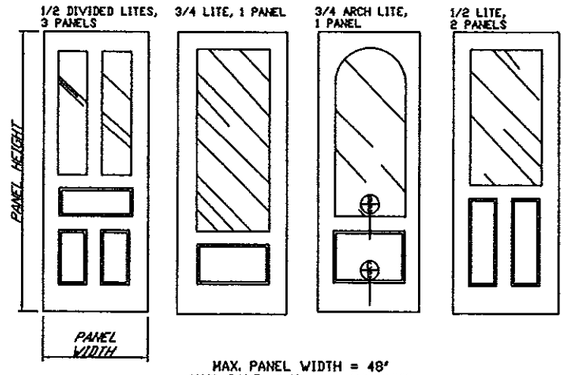

MAX. PANEL WIDTH = 48"
MAX. PANEL HEIGHT = 120-3/4"

ALLOWABLE DOOR PANEL TOP SHAPES:

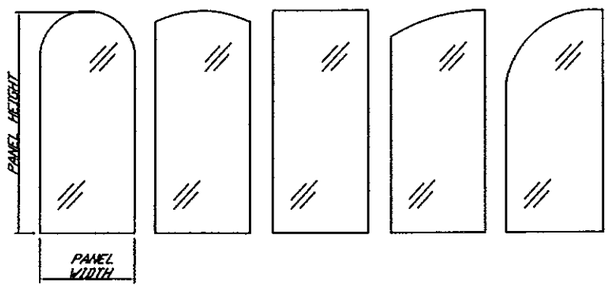

MAX. PANEL WIDTH = 48"
MAX. PANEL HEIGHT = 120-3/4"

GLAZING COMBINATION CONFIGURATIONS (TRUE MUNTINS (MID-RAIL) USED FOR DIVIDED GLASS LITES)

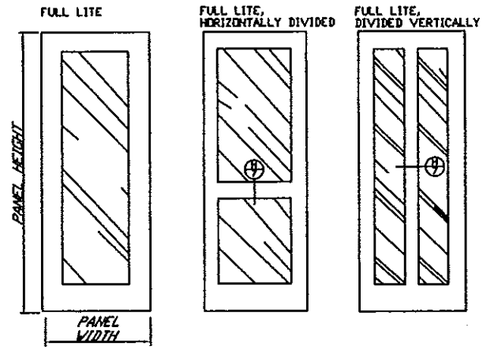

MAX. PANEL WIDTH = 48"
MAX. PANEL HEIGHT = 120-3/4"

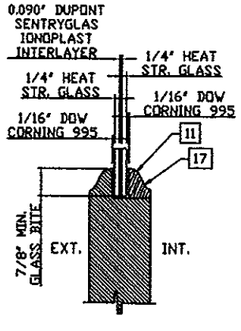

A/2 GLAZING DETAIL
GLAZING OPTION 1

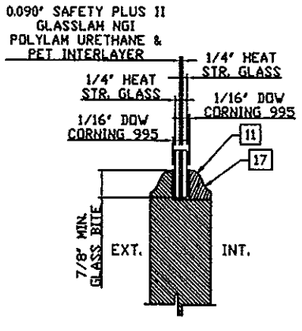

B/2 GLAZING DETAIL
GLAZING OPTION 2

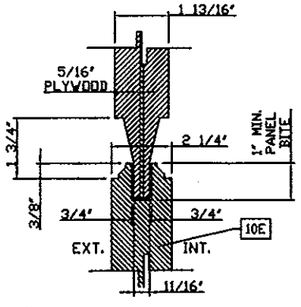

C/2 PARTIAL WOOD RAISED PANEL DETAIL
MAX. 35" H X 37-1/2" W

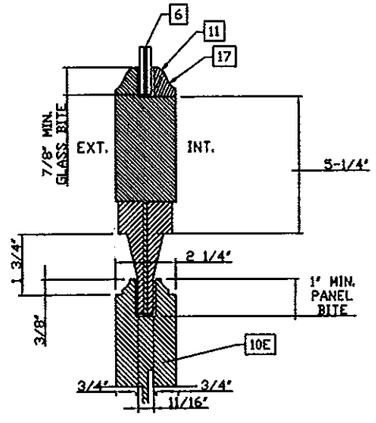

D/2 DIVIDED PARTIAL GLAZED PANEL

Approved as complying with the Florida Building Code
Date 4/19/13
NOA# 12-0523.02
Miami Dade Product Control
By Ishaq I. Chanda

SCOTT WOLTERS
(FLPE# 62354)

WOLTERS ENGINEERING, INC.
(COA# 27194)
5358 SW 32ND TERRACE
FT. LAUDERDALE, FL 33312
APR 04 2013

REV.	DATE	DESCRIPTION	BY
0	10/12/2011	ORIGINAL RELEASE	LAT
1	11/9/2012	SHOW ONLY GLAZING & ADD -G TO TITLE	AWR

Mahogany Outswing Entrance Doors
Large Missile Impact

Montecarlo Doors
4440 PGA Boulevard, Suite 600
Palm Beach Gardens, FL 33410
PHONE: 561.622.5303
FAX: 561.594.1720
www.montecarlodoors.com

DRAWING #
H582-0907-11-G

SCALE: NTS

SHEET
2 of 10

NOTE: EGRESS DOORS MUST MEET FBC REQUIREMENTS TO BE REVIEWED BY BLDG OFFICIAL

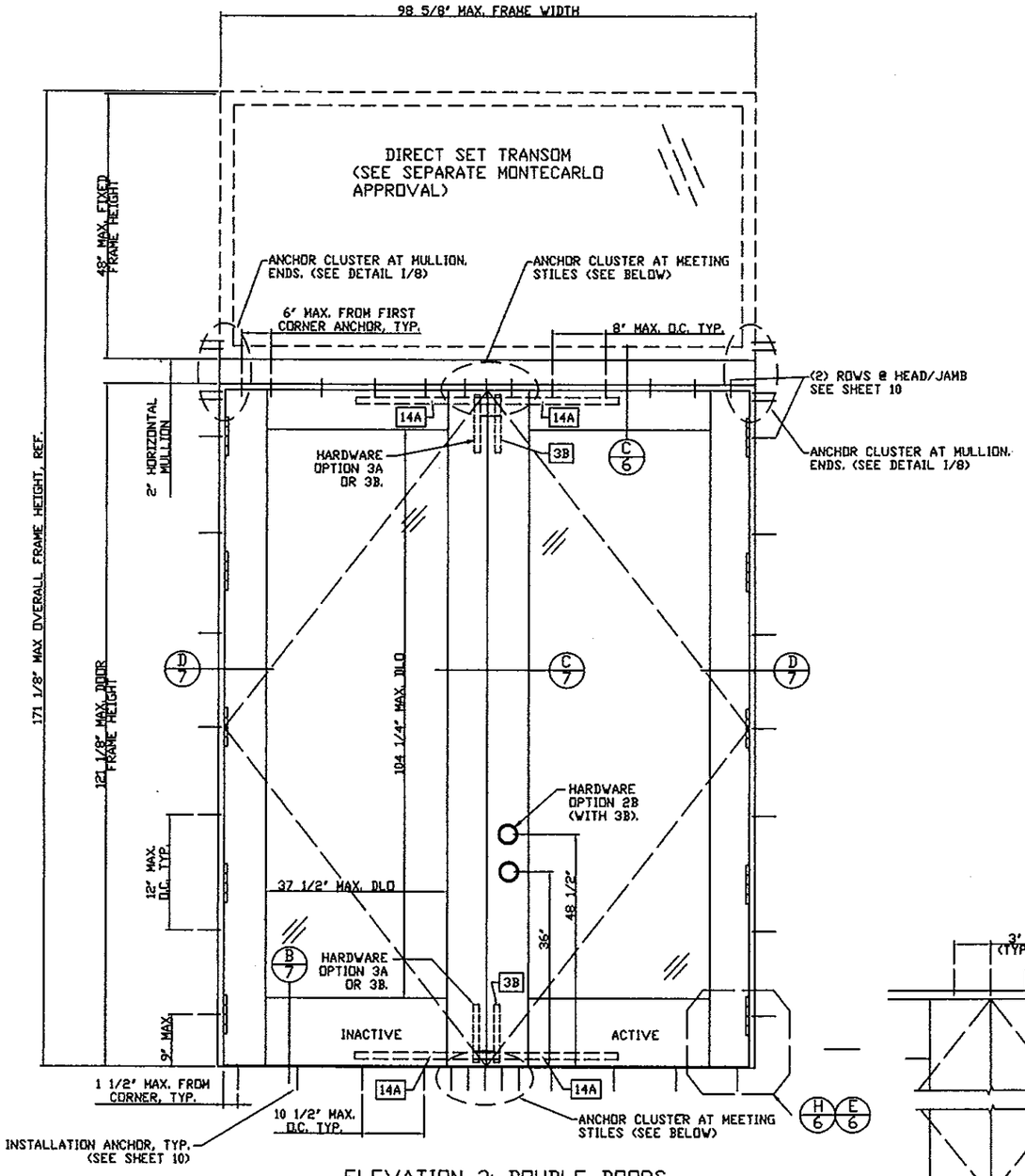

ELEVATION 2: DOUBLE DOORS
(WITH OR WITHOUT TRANSOM)
NOTE: FOR DOOR MAX. SIZES AND SPACINGS SEE ELEVATION 1, THIS SHEET

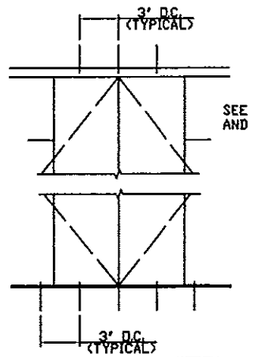

ANCHOR CLUSTERS AT MEETING STILES

SEE SHEET 10 FOR FASTENER TYPE, SPACING, EMBEDMENT, AND EDGE DISTANCE REQUIREMENTS.

HEAD:	WOOD -	(1) ROW OF (3) TYPE A (1) ROW OF (3) TYPE B
	CONCRETE -	(2) ROWS OF (2) TYPE C
	CMU -	(2) ROWS OF (2) TYPE C
	STEEL -	(2) ROWS OF (2) TYPE D
	ALUMINUM -	(2) ROWS OF (2) TYPE E
SILL:	WOOD -	(5) TYPE B
	CONCRETE -	(4) TYPE C
	STEEL -	(4) TYPE D
	ALUMINUM -	(4) TYPE E

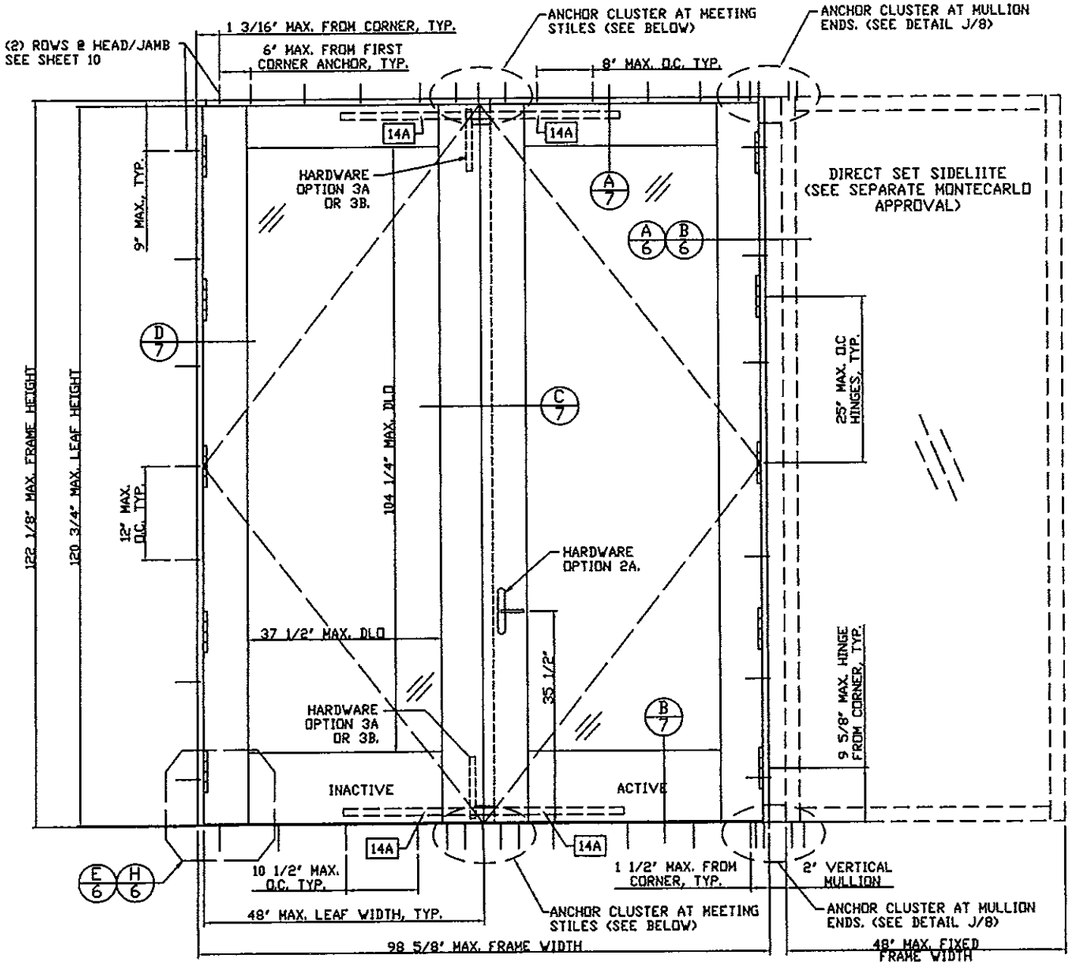

ELEVATION 1: DOUBLE DOORS
(WITH OR WITHOUT SIDELITES)
NOTE: MAX. SIZES AND ANCHOR AND HINGE SPACING SHOWN ABOVE TYPICAL TO ALL DOUBLE DOORS.

Approved as complying with the Florida Building Code
Date 4/4/13
NOA# 12-0509.02
Miami Dade Product Control
By Ishay L. Chavez

SCOTT WOLTERS
(FLPE# 62354)

WOLTERS ENGINEERING, INC.
(COA# 27194)
5358 SW 32ND TERRACE
FT. LAUDERDALE, FL 33312

APR 04 2013

REV.	DATE	DESCRIPTION	BY
0	10/12/2011	ORIGINAL RELEASE	LAT
1	11/9/2012	SHOW ONLY GLAZING & ADD -G TO TITLE	AWR

Mahogany Outswing Entrance Doors
Large Missile Impact

Montecarlo Doors
4440 PGA Boulevard, Suite 600
Palm Beach Gardens, FL 33410
PHONE: 561.623.5303
FAX: 561.594.1720
www.montecarlodoors.com

DRAWING #: H582-0907-11-G
SCALE: NTS
SHEET 3 of 10

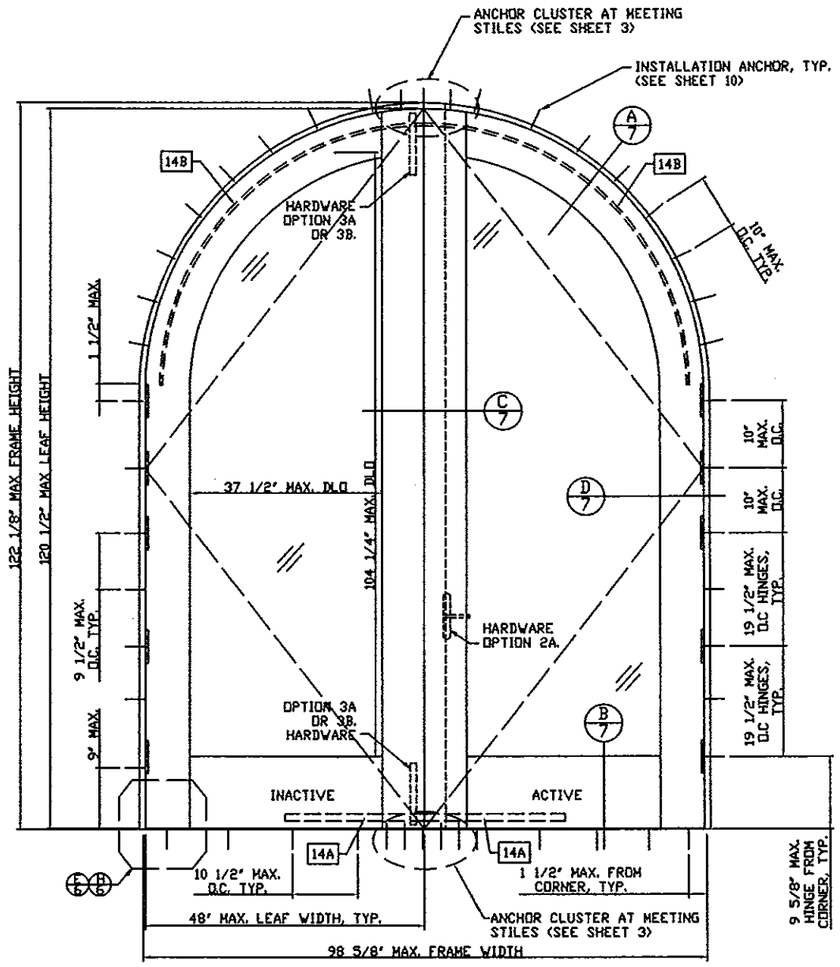

ELEVATION: DOUBLE DOORS WITH ARCH TOP

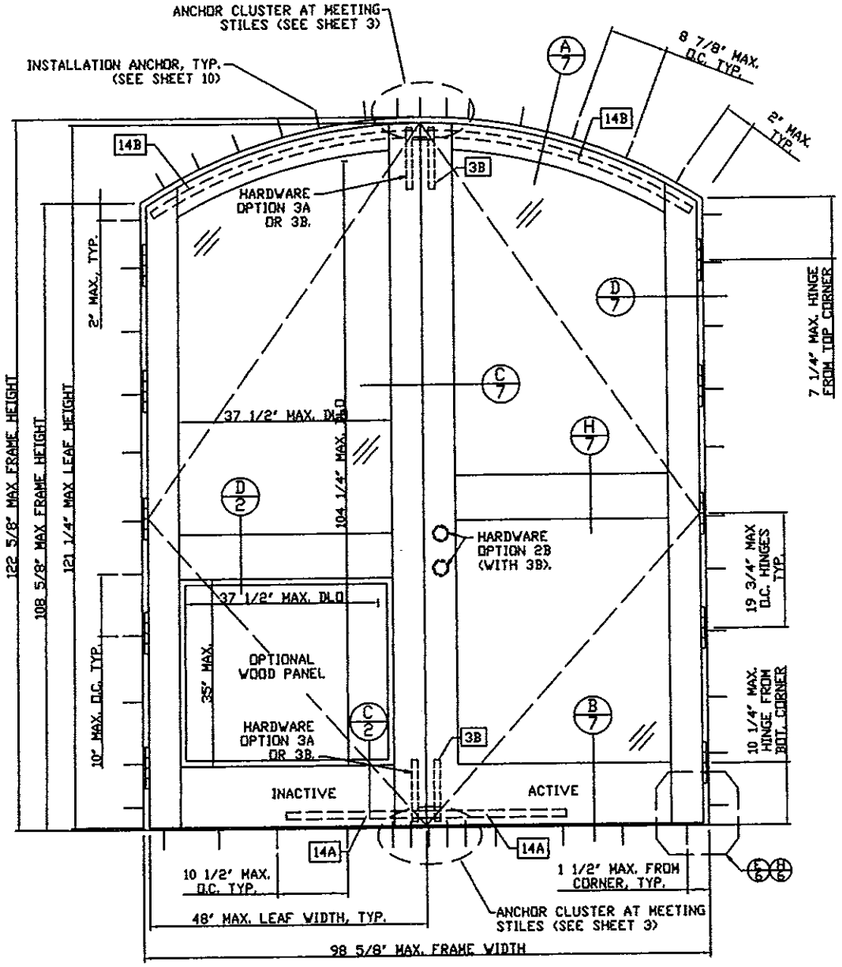

ELEVATION: DOUBLE DOORS WITH EYEBROW TOP
(MAX. SIZES AND SPACINGS SHOWN TYP. FOR SINGLE OR DOUBLE LEAF EYEBROW TOP DOOR)

NOTE: FOR TYP. LOCK/HANDLE LOCATIONS, SEE SHEET 3.

NOTE: EGRESS DOORS MUST MEET FBC REQUIREMENTS TO BE REVIEWED BY BLDG OFFICIAL

Approved as complying with the Florida Building Code
Date 4/9/13
NOA# 12-0509.02
Miami-Dade Product Control
By Ashley L. Grant

SCOTT WOLTERS
(FLPE# 62354)

WOLTERS ENGINEERING, INC.
(COA# 27194)
5358 SW 32ND TERRACE
FT. LAUDERDALE, FL 33312

APR 04 2013

REV.	DATE	DESCRIPTION	BY
0	10/12/2011	ORIGINAL RELEASE	LAT
1	11/9/2012	SHOW ONLY GLAZING & ADD -G TO TITLE	AWR

Mahogany Outswing Entrance Doors
Large Missile Impact

Montecarlo Doors
4440 PGA Boulevard, Suite 600
Palm Beach Gardens, FL 33410
PHONE: 561.623.5303
FAX: 561.594.1720
www.montecarlodoors.com

DRAWING #: H582-0907-11-G
SCALE: NTS
SHEET 4 of 10

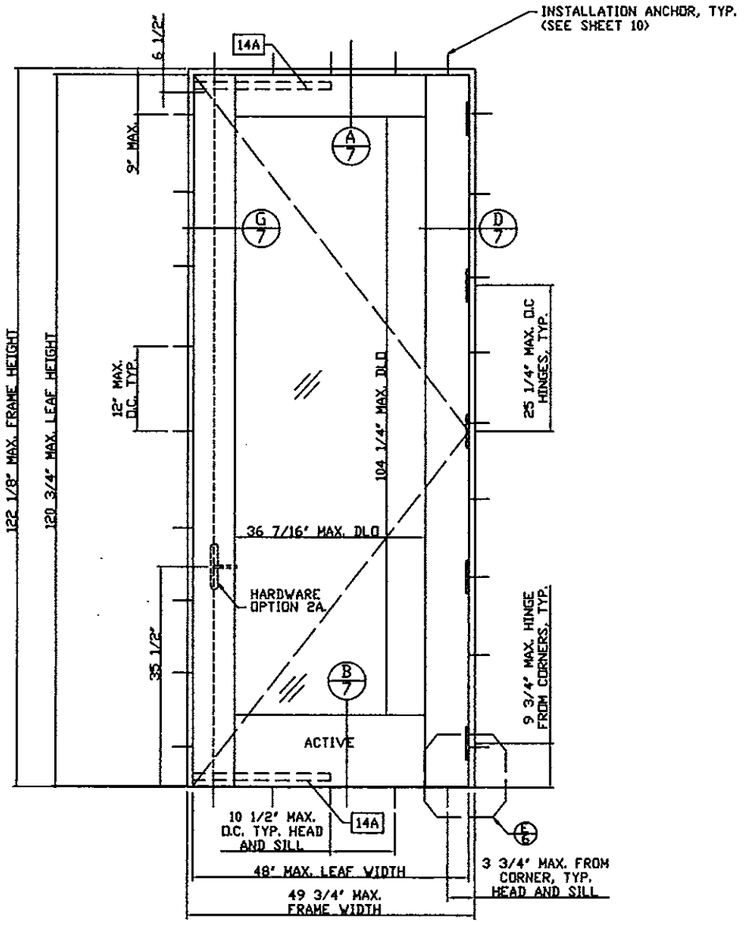

ELEVATION: SINGLE DOOR

NOTE: MAX. SIZES AND ANCHOR AND HINGE SPACING SHOWN ABOVE TYPICAL TO ALL SINGLE DOORS WITH OR WITHOUT DIRECT SET SIDELITES OR TRANSOMS (SEE SHEET 1)

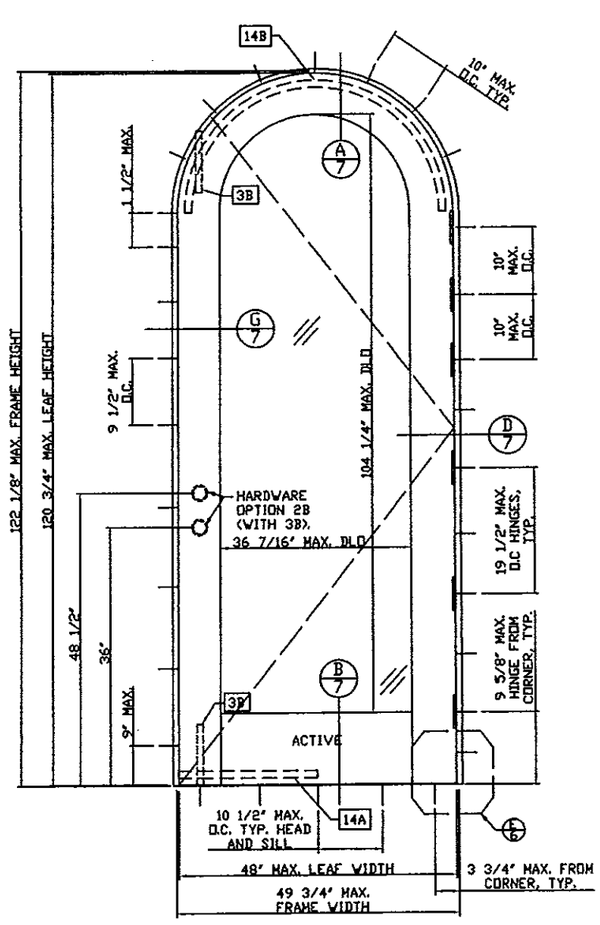

ELEVATION: SINGLE DOOR WITH ARCH TOP

NOTE: EGRESS DOORS MUST MEET FBC REQUIREMENTS TO BE REVIEWED BY BLDG OFFICIAL

Approved as complying with the Florida Building Code
Date 4/4/13
NOA# 12-0505.07
Miami-Dade Product Control
By Ishaq I. Chand

SCOTT WOLTERS
(FLPE# 62354)

WOLTERS ENGINEERING, INC.
(COA# 27194)
5358 SW 32ND TERRACE
FT. LAUDERDALE, FL 33312

APR 04 2013

REV.	DATE	DESCRIPTION	BY
0	10/12/2011	ORIGINAL RELEASE	LAT
1	11/9/2012	SHOW ONLY GLAZING & ADD -G TO TITLE	AWR

Mahogany Outswing Entrance Doors
Large Missile Impact

Montecarlo Doors
4440 PGA Boulevard, Suite 600
Palm Beach Gardens, FL 33410
PHONE: 561.623.5303
FAX: 561.594.1720
www.montecarlodoors.com

DRAWING #: H582-0907-11-G

SCALE: NTS

SHEET 5 of 10

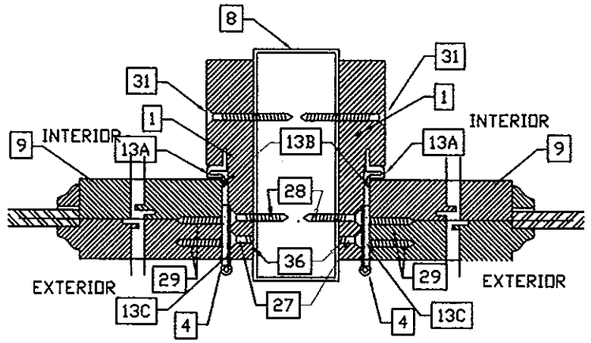

A/6 MULLION DETAIL (DOOR-DOOR)

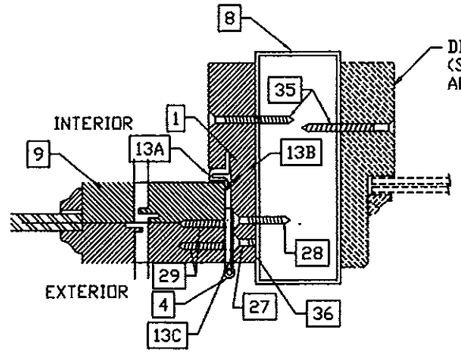

B/6 MULLION DETAIL (DOOR-SIDELITE)

SEE SEPARATE DIRECT SET MONTECARLO APPROVAL FOR MULLION ANCHORS.

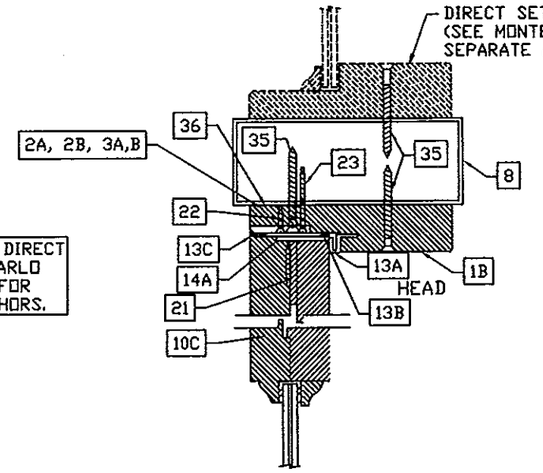

C/6 TRANSOM MULLION DETAIL

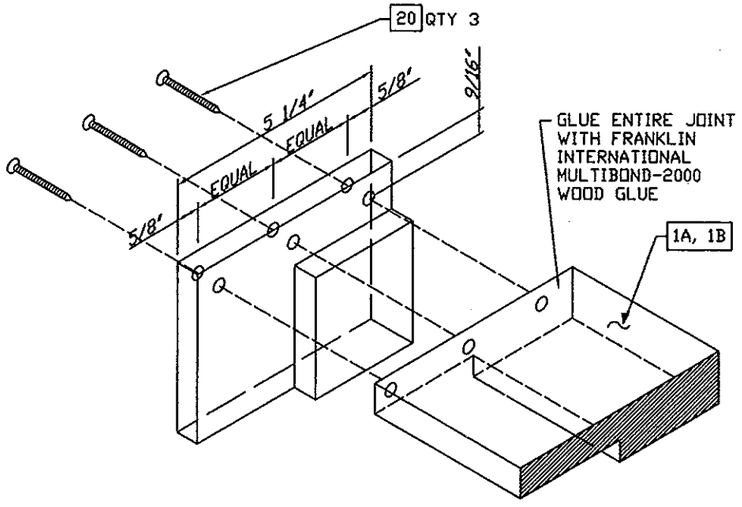

D/6 TYP. FRAME CORNER DETAIL (ALL MEETING JAMBS TO BE SCREWED AT ALL CORNERS) SCALE: NTS

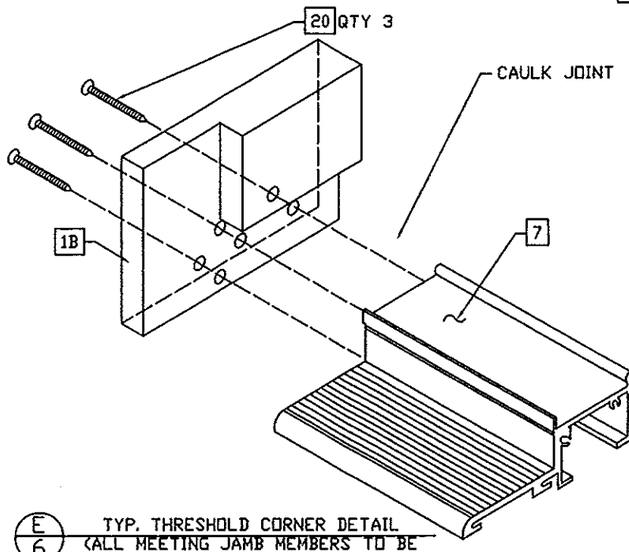

E/6 TYP. THRESHOLD CORNER DETAIL (ALL MEETING JAMB MEMBERS TO BE SCREWED AT ALL CORNERS) SCALE: NTS

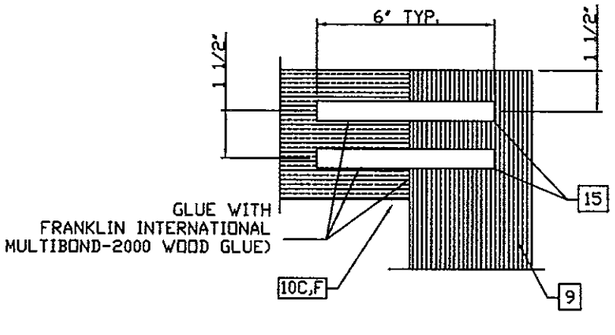

F/6 TYP. TOP RAIL ASSEMBLY DETAIL SCALE: NTS

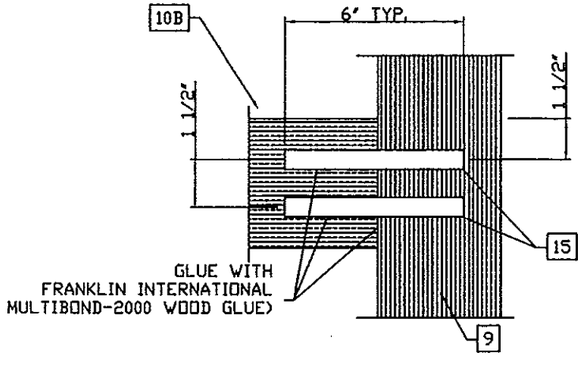

G/6 TYP. MEETING RAIL ASSEMBLY DETAIL SCALE: NTS

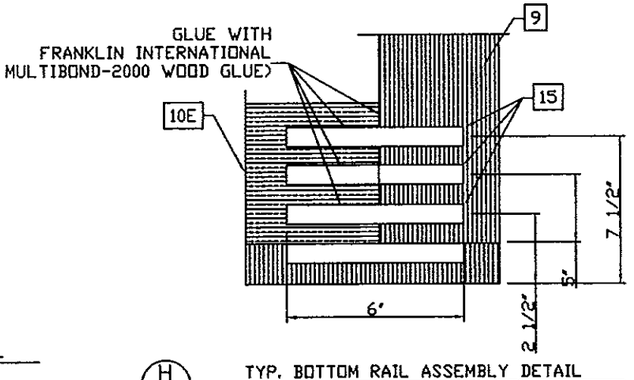

H/6 TYP. BOTTOM RAIL ASSEMBLY DETAIL SCALE: NTS

REV.	DATE	DESCRIPTION	BY
D	10/12/2011	ORIGINAL RELEASE	LAT
1	11/9/2012	SHOW ONLY GLAZING & ADD -G TO TITLE	AVR

Mahogany Outswing Entrance Doors
Large Missile Impact

Approved as complying with the Florida Building Code
Date 4/4/13
NOA# 12-0509.02
Miami Dade Product Control
By Cheryl L. Chant

SCOTT WOLTERS
(FLPE# 62354)

WOLTERS ENGINEERING, INC.
(COA# 27194)
5358 SW 32ND TERRACE
FT. LAUDERDALE, FL 33312

APR 04 2013

Montecarlo Doors
4440 PGA Boulevard, Suite 600
Palm Beach Gardens, FL 33410
PHONE: 561.623.5303
FAX: 561.594.1720
www.montecarlodoors.com

DRAWING # H582-0907-11-G
SCALE: NTS
SHEET 6 of 10

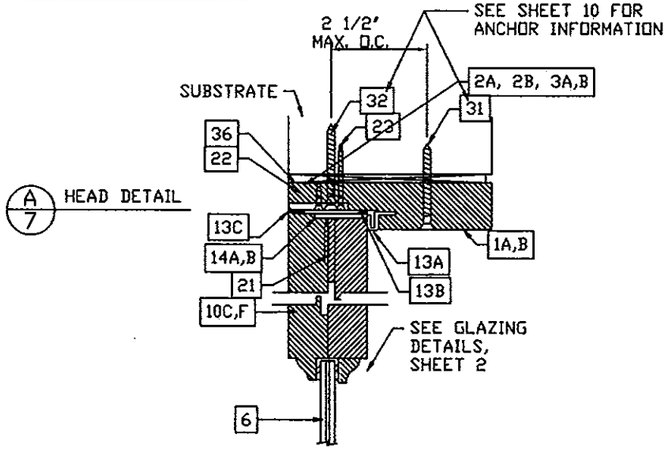

A/7 HEAD DETAIL

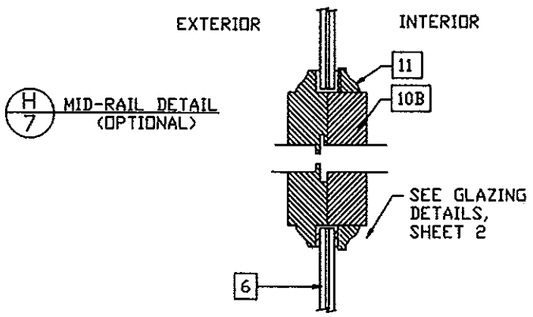

H/7 MID-RAIL DETAIL (OPTIONAL)

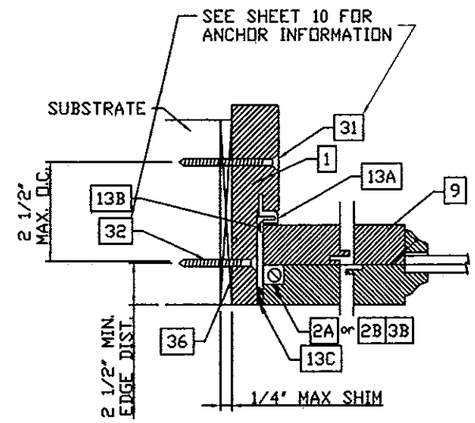

SINGLE DOOR LOCK JAMB DETAIL G/7

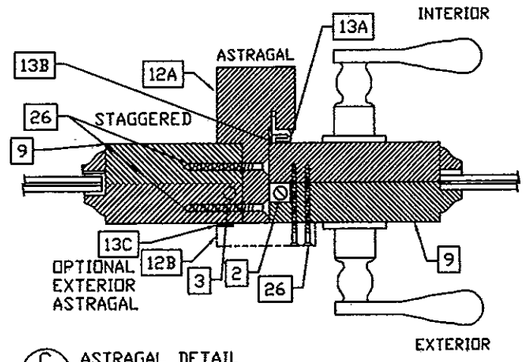

C/7 ASTRAGAL DETAIL

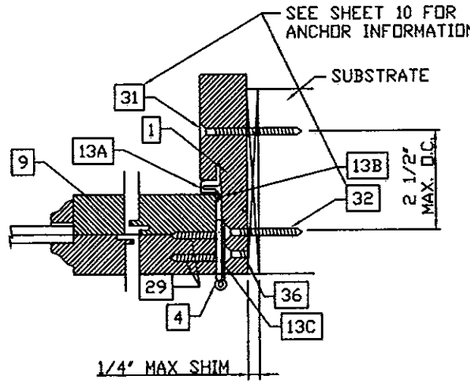

D/7 HINGE JAMB DETAIL

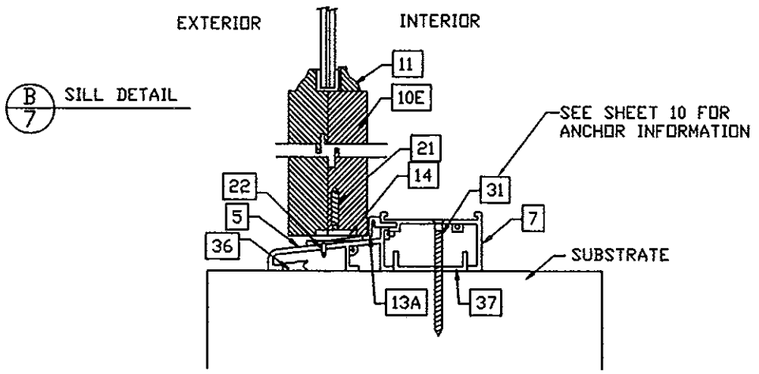

B/7 SILL DETAIL

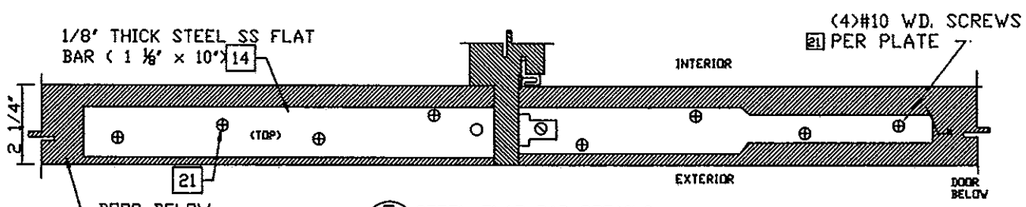

E/7 STEEL FLAT BAR DETAILS (APPLIED TO TOP AND BOTTOM OF EACH DOOR)

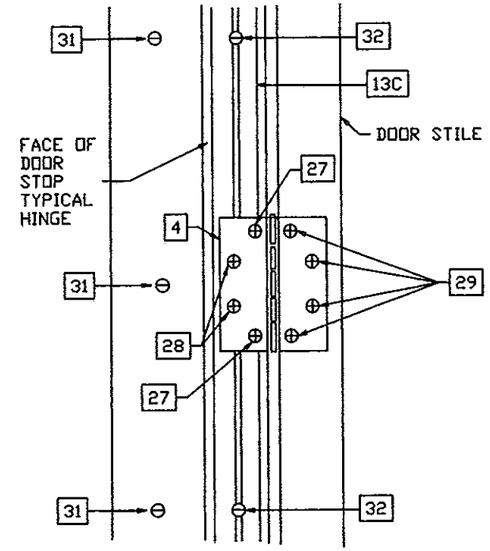

F/7 TYP. HINGE DETAIL

Approved as complying with the Florida Building Code
Date 9/4/13
NOA# 12-0509.02
Miami Dade Product Control
By Ishwaj L. Chand

SCOTT WOLTERS
(FLPE# 62354)

WOLTERS ENGINEERING, INC.
(COA# 27194)
5358 SW 32ND TERRACE
FT. LAUDERDALE, FL 33312
APR 04 2013

REV.	DATE	DESCRIPTION	BY
0	10/12/2011	ORIGINAL RELEASE	LAT
1	11/9/2012	SHOW ONLY GLAZING & ADD -G TO TITLE	AWR

Mahogany Outswing Entrance Doors
Large Missile Impact

Montecarlo Doors
4440 PGA Boulevard, Suite 600
Palm Beach Gardens, FL 33410
PHONE: 561.623.5303
FAX: 561.594.1720
www.montecarlodoors.com

DRAWING # H582-0907-11-G
SCALE: NTS

NOTE: ALL COMPOSITE PARTS ARE CONSTRUCTED WITH TITEBOND II FRANKLIN INTERNATIONAL WOOD GLUE

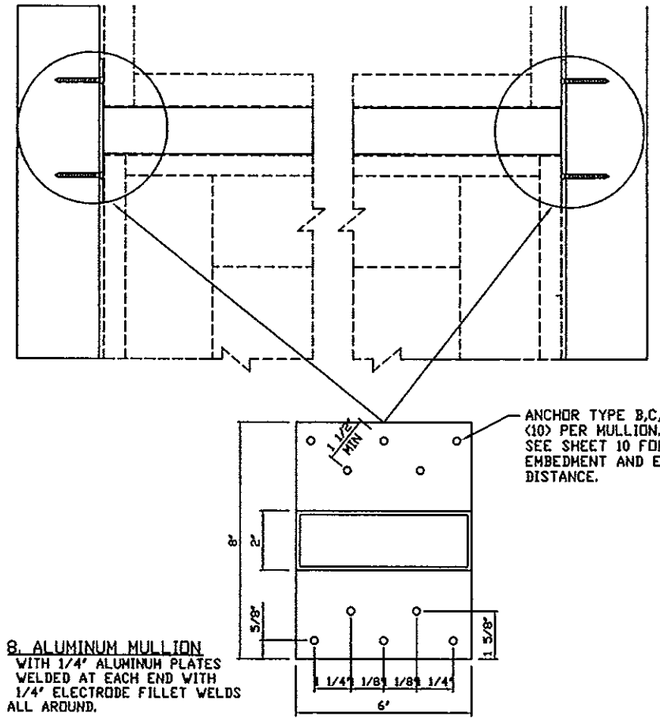

8. ALUMINUM MULLION WITH 1/4" ALUMINUM PLATES WELDED AT EACH END WITH 1/4" ELECTRODE FILLET WELDS ALL AROUND.

1/8 I HORIZONTAL MULLION ANCHOR DETAIL

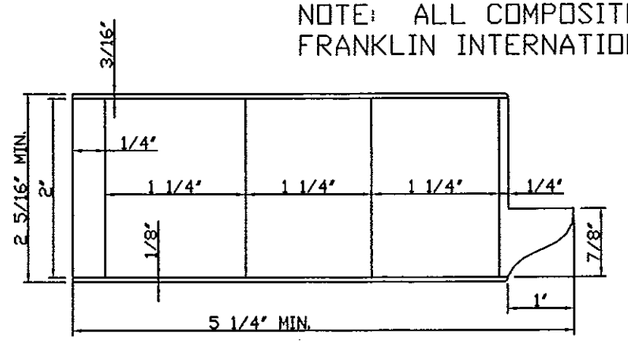

9. TYPICAL STILE (COMPOSITE MAHOGANY)

WOOD PROPERTIES
MAHOGANY
Min. E = 1.9×10^6 Psi
Min. Fy = 15,500 Psi
Min. S.G. = 0.56
PLYWOOD
Min. E = 1.1×10^6 Psi
Min. Fy = 5,700 Psi
Min. S.G. = 0.53

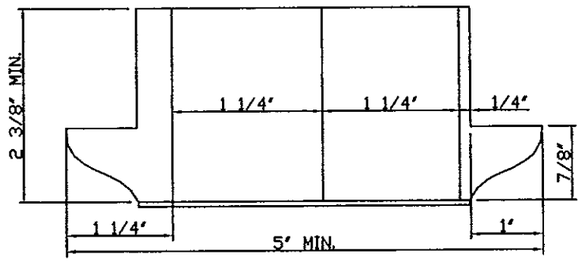

10B. MEETING RAIL/INT. STILE (COMPOSITE MAHOGANY)

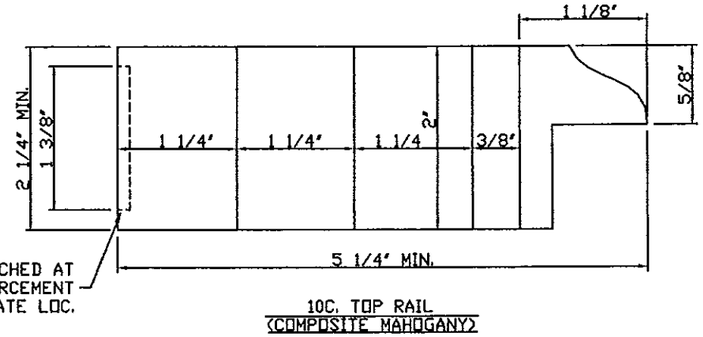

10C. TOP RAIL (COMPOSITE MAHOGANY)

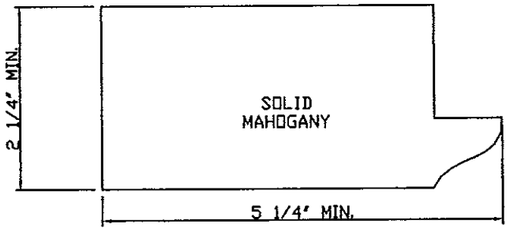

10F. TOP RAIL - ARCH

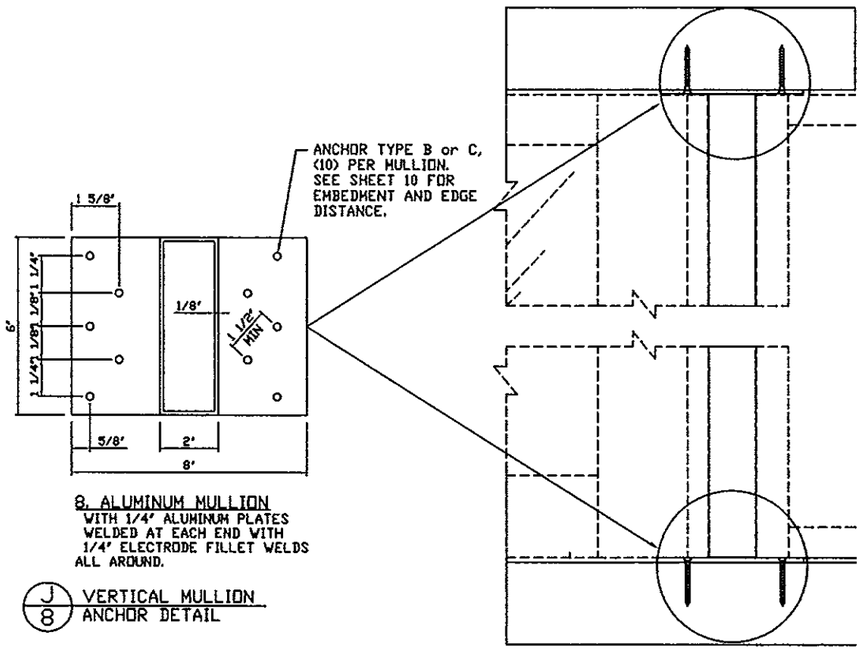

8. ALUMINUM MULLION WITH 1/4" ALUMINUM PLATES WELDED AT EACH END WITH 1/4" ELECTRODE FILLET WELDS ALL AROUND.

J/8 VERTICAL MULLION ANCHOR DETAIL

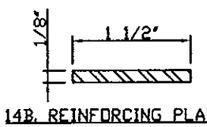

14B. REINFORCING PLATE (STEEL)

11. GLASS STOP

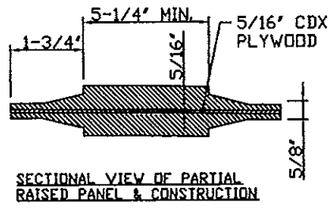

SECTIONAL VIEW OF PARTIAL RAISED PANEL & CONSTRUCTION

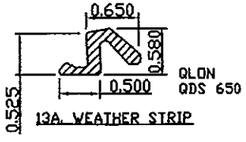

QLON QDS 650

13A. WEATHER STRIP

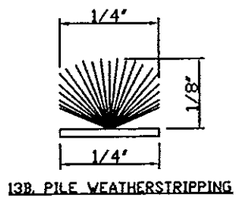

13B. PILE WEATHERSTRIPPING

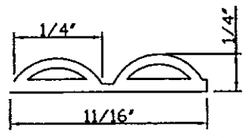

13C. MD BUILDING PRODUCTS ALL CLIMATE WEATHERSTRIPPING TAPE #63628 (EPDM)

Approved as complying with the Florida Building Code
Date 9/19/13
NOA# 12-0509.02
Miami Dade Product Control
By

SCOTT WOLTERS
(FLPE# 62354)

WOLTERS ENGINEERING, INC.
(COA# 27194)
5358 SW 32ND TERRACE
FT. LAUDERDALE, FL 33312

REV.	DATE	DESCRIPTION	BY
D	10/12/2011	ORIGINAL RELEASE	LAT
1	11/9/2012	SHOW ONLY GLAZING & ADD -G TO TITLE	AWR

Mahogany Outswing Entrance Doors
Large Missile Impact

Montecarlo Doors
4440 PGA Boulevard, Suite 600
Palm Beach Gardens, FL 33410
PHONE: 561.623.5303
FAX: 561.594.1720
www.montecarlodoors.com

DRAWING # H582-0907-11-G

SCALE: NTS

EXTERIOR INTERIOR

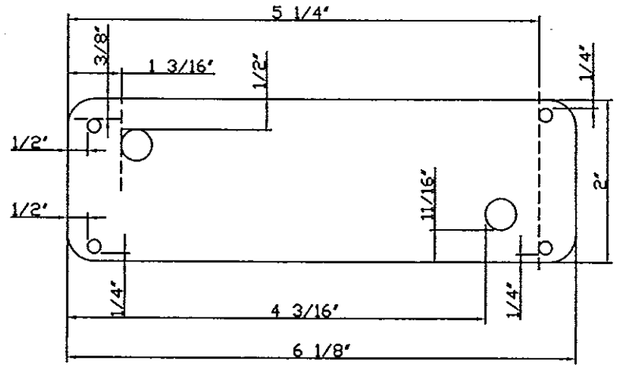

5. 1/8" STEEL STRIKE PLATES AT HEAD & THRESHOLD
PAIR OF DOORS - QTY: 2
SINGLE DOOR - QTY: 2

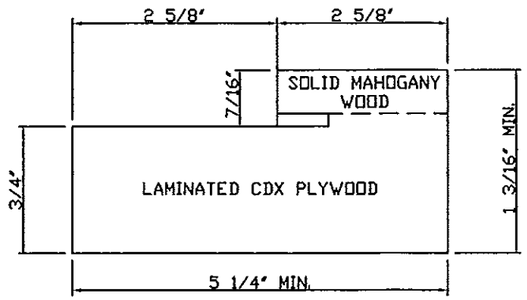

1A. HEAD FOR ARCH TOP AND EYEBROW

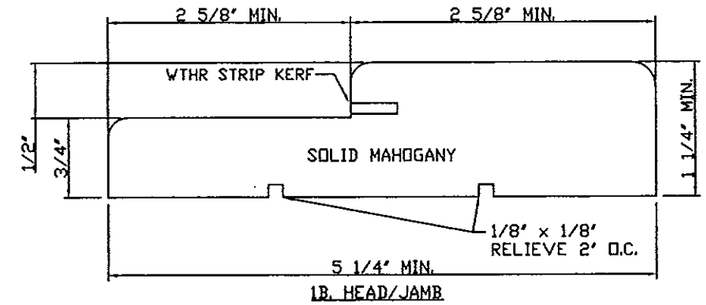

1B. HEAD/JAMB

NOTE: ALL COMPOSITE PARTS ARE CONSTRUCTED WITH TITEBOND II FRANKLIN INTERNATIONAL WOOD GLUE

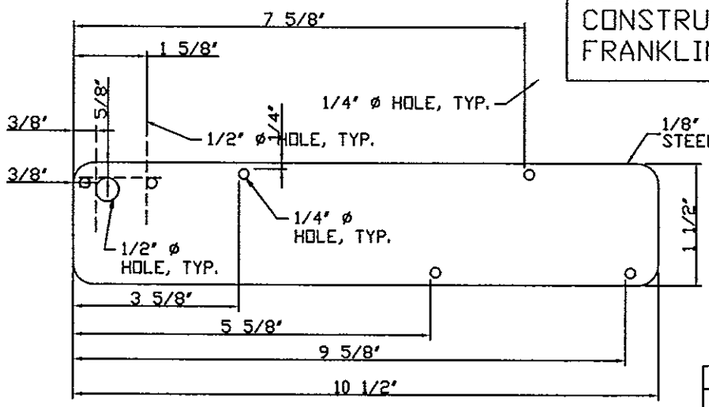

14A. TYPICAL TOP/BOTTOM DOOR GUIDE REINFORCING
2 PER DOOR LEAF, 1 @ TOP, 1 @ BOTTOM

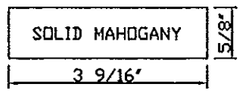

12B. EXTERIOR ASTRAGAL

WOOD PROPERTIES
MAHOGANY
Min. E = 1.9x10⁶ Psi
Min. Fy = 15,500 Psi
Min. S.G. = 0.56
PLYWOOD
Min. E = 1.1x10⁶ Psi
Min. Fy = 5,700 Psi
Min. S.G. = 0.53

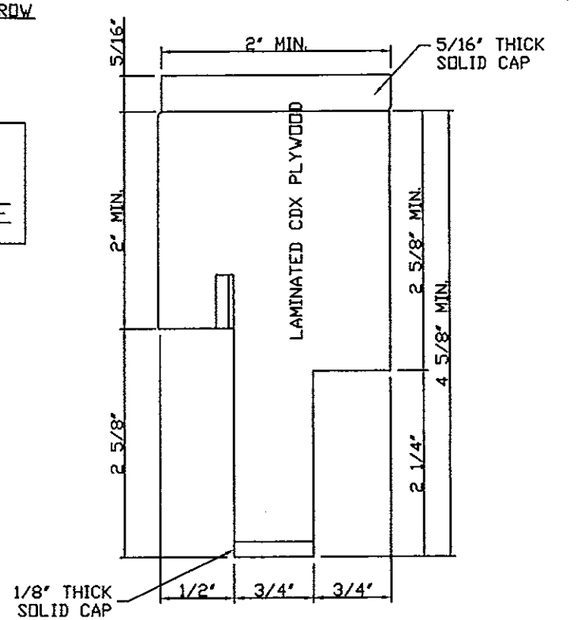

12A. ASTRAGAL

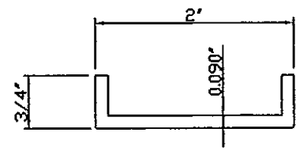

37. ALUMINUM CHANNEL

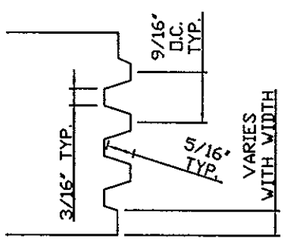

FINGER JOINT DETAIL

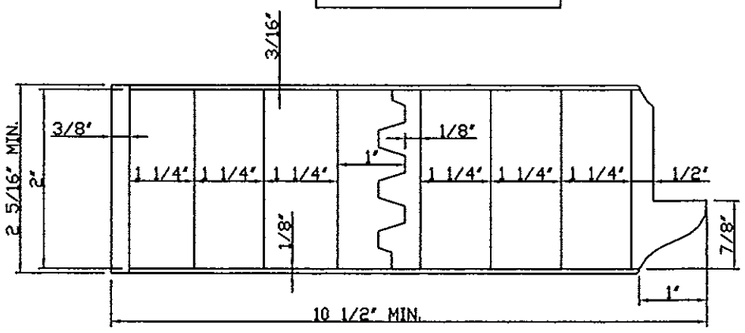

10E. TYPICAL BOTTOM RAIL
(COMPOSITE MAHOGANY)

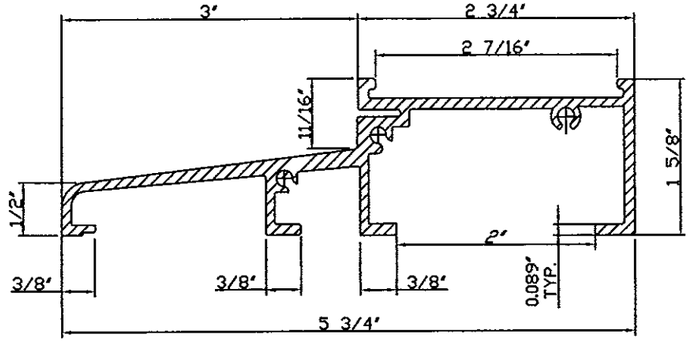

7. ALUMINUM THRESHOLD
(6063-T5)

Approved as complying with the Florida Building Code
Date 4/9/13
NOA# 12-0525.02
Miami-Dade Product Control
By Ishaq I. Chanda

SCOTT WOLTERS
(FLPE# 62354)

WOLTERS ENGINEERING, INC.
(COA# 27194)
5358 SW 32ND TERRACE
FT. LAUDERDALE, FL 33312

APR 11 2013

REV.	DATE	DESCRIPTION	BY
0	10/12/2011	ORIGINAL RELEASE	LAT
1	11/9/2012	SHOW ONLY GLAZING & ADD -G TO TITLE	AWR

Mahogany Outswing Entrance Doors
Large Missile Impact

Montecarlo Doors
4440 PGA Boulevard, Suite 600
Palm Beach Gardens, FL 33410
PHONE: 561.623.5303
FAX: 561.594.1720
www.montecarlodoors.com

DRAWING #: H582-0907-11-G

SCALE: NTS

TYPICAL ANCHOR CONDITIONS

TYPICAL ANCHORS

WOOD (2 1/4" MIN.)	- TYPE A -	#12 X 3-3/4" PFHSMS WITH 2-1/4" EMBEDMENT AND 7/8" EDGE DISTANCE.
WOOD (2 1/4" MIN.)	- TYPE B -	1/4" X 3-3/4" PFHSMS WITH 2-1/4" EMBEDMENT AND 1" EDGE DISTANCE.
CONCRETE (3000 PSI MIN)	- TYPE C -	1/4" DIA. FH ITW TAPCON OR ELCO ULTRACON DIRECTLY INTO CONCRETE OR THRU WOOD BUCK INTO CONCRETE WITH 1-3/4" MIN. EMBEDMENT AND 2-1/2" MIN EDGE DISTANCE.
CMU (ASTM 90)	- TYPE C -	1/4" DIA. FH ITW TAPCON OR ELCO ULTRACON DIRECTLY INTO GROUT FILLED CMU OR THRU WOOD BUCK INTO CMU WITH 1-3/4" MIN. EMBEDMENT AND 2-1/2" MIN EDGE DISTANCE.
STEEL (16 Ga. 33 KSI MIN)	- TYPE D -	1/4" DIA. FH F-TYPE (GR. 5) THREAD FORMING SCREW WITH FULL EMBEDMENT AND 1/2" MIN EDGE DISTANCE
ALUM TUBE MULLION (1/8" MIN, 6063-T5)	- TYPE E -	1/4" DIA. FH SHEET METAL SCREW WITH FULL EMBEDMENT AND 1/2" MIN EDGE DISTANCE

Door Jmabs are In Double Row See Below

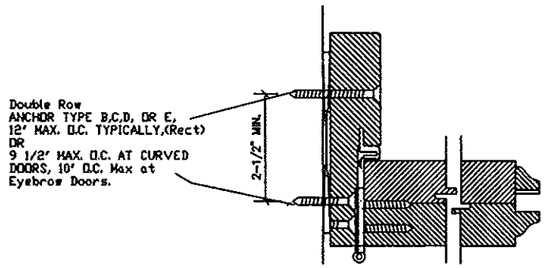

DOOR JAMB ANCHORS EXT.

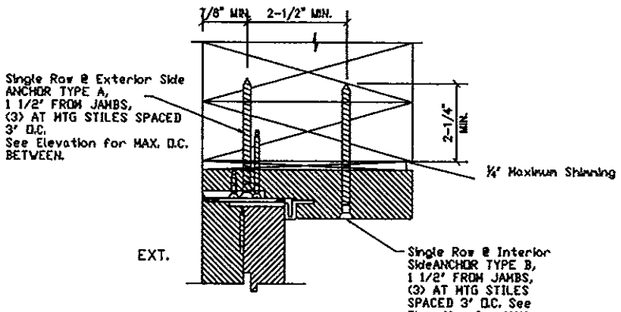

WOOD

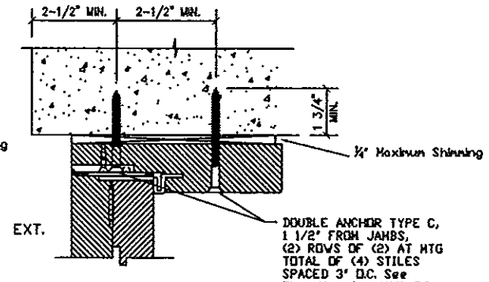

CONCRETE OR CMU

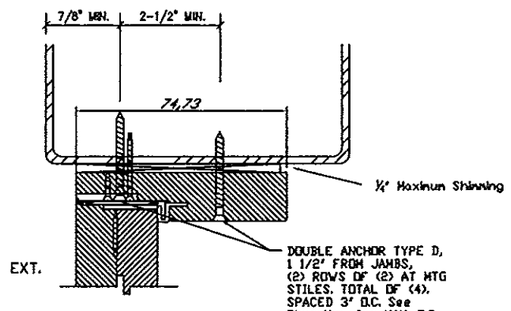

STEEL

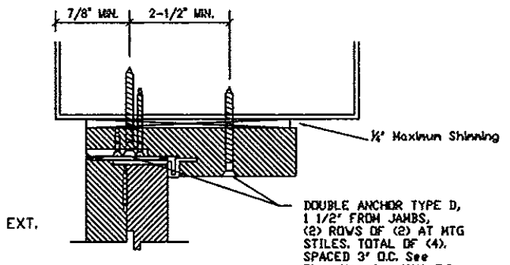

ALUMINUM MULLION

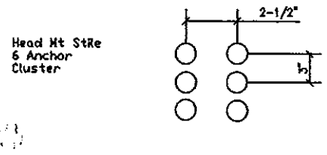

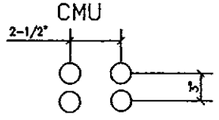

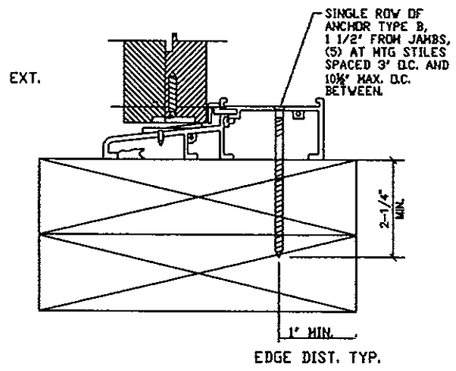

WOOD

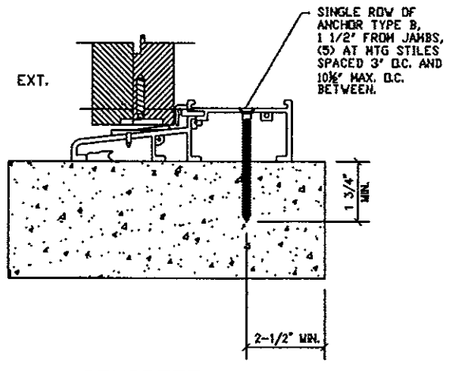

CONCRETE

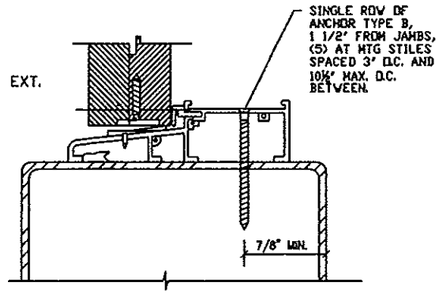

STEEL

SILL ANCHORS

REV.	DATE	DESCRIPTION	BY
0	10/12/2011	ORIGINAL RELEASE	LAT
1	11/9/2012	SHOW ONLY GLAZING & ADD -G TO TITLE	AWR

Mahogany Outswing Entrance Doors
Large Missile Impact

Approved as complying with the Florida Building Code
Date APR 04, 2013
NOA# 12-0509.02
Miami-Dade Product Control
By

SCOTT WOLTERS
(FLPE# 62354)

WOLTERS ENGINEERING, INC.
(COA# 27194)
5358 SW 32ND TERRACE
FT. LAUDERDALE, FL 33312

APR 04 2013

Montecarlo Doors
4440 PGA Boulevard, Suite 600
Palm Beach Gardens, FL 33410
PHONE: 561.623.5303
FAX: 561.594.1720
www.montecarlodoors.com

DRAWING # H582-0907-11-G

SCALE: NTS

SHEET 10 of 10