MIAMI-DADE COUNTY
DEPARTMENT OF REGULATORY AND ECONOMIC RESOURCES (RER)
BOARD AND CODE ADMINISTRATION DIVISION

MIAMI-DADE COUNTY
PRODUCT CONTROL SECTION
11805 SW 26 Street, Room 208
Miami, Florida 33175-2474
T (786) 315-2590 F (786) 315-2599
www.miamidade.gov/economy

NOTICE OF ACCEPTANCE (NOA)

NFC Aluminum, Inc.
6290 West 16th Avenue
Hialeah, Florida 33012

SCOPE:
This NOA is being issued under the applicable rules and regulations governing the use of construction materials. The documentation submitted has been reviewed and accepted by Miami-Dade County RER-Product Control Section to be used in Miami Dade County and other areas where allowed by the Authority Having Jurisdiction (AHJ).

This NOA shall not be valid after the expiration date stated below. The Miami-Dade County Product Control Section (In Miami Dade County) and/or the AHJ (in areas other than Miami Dade County) reserve the right to have this product or material tested for quality assurance purposes. If this product or material fails to perform in the accepted manner, the manufacturer will incur the expense of such testing and the AHJ may immediately revoke, modify, or suspend the use of such product or material within their jurisdiction. RER reserves the right to revoke this acceptance, if it is determined by Miami-Dade County Product Control Section that this product or material fails to meet the requirements of the applicable building code.

This product is approved as described herein, and has been designed to comply with the High Velocity Hurricane Zone of the Florida Building Code.

DESCRIPTION: " GSS-1 " Genesis Aluminum Accordion Shutter System

APPROVAL DOCUMENT: Drawing No. AD12-41, titled "GSS-1 Genesis Shutter System ", sheets 1 through 15 of 15, prepared by MCY Engineering, Inc., dated May 11, 2012, signed and sealed by Yiping Wang, P.E., on May 11, 2012, bearing the Miami-Dade County Product Control Approval stamp with the Notice of Acceptance number and the approval date by the Miami-Dade County Product Control Section.

MISSILE IMPACT RATING: Large and Small Missile Impact Resistant

LABELING: Each unit shall bear a permanent label with the manufacturer's name or logo, Hialeah Gardens, FL, the following statement: "Miami-Dade County Product Control Approved", and NOA number, per TAS-201, TAS-202, and TAS-203, unless otherwise noted herein.

RENEWAL of this NOA shall be considered after a renewal application has been filed and there has been no change in the applicable building code negatively affecting the performance of this product.

TERMINATION of this NOA will occur after the expiration date or if there has been a revision or change in the materials, use, and/or manufacture of the product or process. Misuse of this NOA as an endorsement of any product, for sales, advertising or any other purposes shall automatically terminate this NOA. Failure to comply with any section of this NOA shall be cause for termination and removal of NOA.

ADVERTISEMENT: The NOA number preceded by the words Miami-Dade County, Florida, and followed by the expiration date may be displayed in advertising literature. If any portion of the NOA is displayed, then it shall be done in its entirety.

INSPECTION: A copy of this entire NOA shall be provided to the user by the manufacturer or its distributors and shall be available for inspection at the job site at the request of the Building Official.

This NOA consists of this page 1, evidence submitted page E-1 as well as approval document mentioned above. The submitted documentation was reviewed by **Helmy A. Makar, P.E., M.S.**

MIAMI-DADE COUNTY APPROVED

Helmy A. Makar
09/13/2012

NOA No. 12-0514.14
Expiration Date: 09/13/2017
Approval Date: 09/13/2012

NFC Aluminum, Inc.

NOTICE OF ACCEPTANCE: EVIDENCE SUBMITTED

A. DRAWINGS

1. *Drawing No. AD12-41, titled "GSS-1 Genesis Shutter System ", sheets 1 through 15 of 15, prepared by MCY Engineering, Inc., dated May 11, 2012, signed and sealed by Yiping Wang, P.E., on May 11, 2012.*

B. TESTS

1. *See Association's generic approval under 11-1006.*

C. CALCULATIONS

1. *See Association's generic approval under 11-1006.*

D. QUALITY ASSURANCE

1. *By Miami-Dade County Department of Regulatory and Economic Resources.*

E. MATERIAL CERTIFICATIONS

1. *See Association's generic approval under 11-1006.*

F. STATEMENTS

1. *Release letter issued by Genesis Shutter Group, dated May 02, 2012, certifying this product to meet the criteria of product tested and approved, and allowing NFC Aluminum, Inc. to use the test results approved under Miami Dade County Approval No. 11-1006, signed by Mr. Noel Fonseca.*
2. *Acknowledgment letter by NFC Aluminum, Inc., dated May 08, 2012, signed by Noel Fonseca.*
3. *Letter by MCY Engineering, Inc., dated May 11, 2012, signed and sealed by Ms. Yiping Wang, P.E., certifying that the drawing (No. AD12-41) prepared for NFC Aluminum, Inc. is engineering wise identical to Genesis Shutter Group generic drawing (No. AD11-02).*

Helmy A. Makar, P.E., M.S.
Product Control Unit Supervisor
NOA No. 12-0514.14
Expiration Date: 09/13/2017
Approval Date: 09/13/2012

GENERAL NOTES:

1. THIS PRODUCT HAS BEEN DESIGNED AND TESTED TO COMPLY WITH THE REQUIREMENTS OF THE FLORIDA BUILDING CODE 2010 EDITION INCLUDING HIGH VELOCITY HURRICANE ZONE (HVHZ).

2. ALL ALUMINUM EXTRUSIONS SHALL BE 6063-T6 ALLOY WITH MINIMUM YIELD STRENGTH OF Fy=31.0 KSI UNLESS IT IS SPECIFIED.

3. ANCHORS SHALL BE AS LISTED, SPACED AS SHOWN ON DETAILS. ANCHORS EMBEDMENT TO BASE MATERIAL SHALL BE BEYOND WALL DRESSING OR STUCCO.

4. ANCHORING OR LOADING CONDITIONS NOT SHOWN IN THESE DETAILS ARE NOT PART OF THIS APPROVAL.

5. WOOD BUCKS BY OTHERS MUST BE SOUTHERN PINE, G = 0.55 AND MUST BE ANCHORED PROPERLY TO TRANSFER LOADS TO THE STRUCTURE.

6. ALL ALUMINUM BLIND RIVETS TO BE 5052 ALUMINUM ALLOY WITH ALUMINUM MANDREL.

7. BOLTS TO BE GALVANIZED OR STAINLESS STEEL WITH 36 ksi MINIMUM YIELD STRENGTH.

8. IT SHALL BE THE RESPONSIBILITY OF THE CONTRACTOR TO VERIFY THE SOUNDNESS OF THE STRUCTURE WHERE SHUTTER IS TO BE ATTACHED TO INSURE PROPER ANCHORAGE. THIS SHUTTER SHALL ONLY BE ATTACHED TO CONCRETE, BLOCK OR WOOD FRAME BUILDINGS.

9. A PERMANENT SHUTTER MANUFACTURER'S LABEL SHOULD BE PLACED ON THE EXPOSED SURFACE OF THE CENTERMATE BLADE (COMPONENT 10) UNDER LOCK. ONE LABEL SHALL BE PLACED FOR EVERY OPENING. LABEL SHALL READ AS FOLLOWS:

   NFC ALUMINUM INC.
   9811 NW 80 AVE. BAY 74/7B
   HIALEAH GARDENS, FL 33016
   MIAMI-DADE COUNTY PRODUCT CONTROL APPROVED.
   NOA # 11-1006 PER TAS-201, TAS-202, AND TAS-203.

10. (a) THIS PRODUCT APPROVAL DOCUMENT (P.A.D.) PREPARED BY THIS ENGINEER IS GENERIC.

(b) CONTRACTOR TO BE RESPONSIBLE FOR THE SELECTION, PURCHASE AND INSTALLATION INCLUDING LIFE SAFETY OF THIS PRODUCT BASED ON THIS PRODUCT APPROVAL PROVIDED HE/SHE DOES NOT DEVIATE FROM THE CONDITIONS DETAILED ON THIS DOCUMENT. CONSTRUCTION SAFETY AT SITE IS THE CONTRACTOR'S RESPONSIBILITY.

(c) THIS PRODUCT APPROVAL DOCUMENT WILL BE CONSIDERED INVALID IF MODIFIED.

(d) SITE SPECIFIC PROJECTS SHALL BE PREPARED BY A FLORIDA REGISTERED ENGINEER OR ARCHITECT WHICH WILL BECOME THE ENGINEER OF RECORD (E.O.R.) FOR THE PROJECT AND WHO WILL BE RESPONSIBLE FOR THE PROPER USE OF THE P.A.D. ENGINEER OF RECORD, ACTING AS DELEGATED ENGINEER TO THE P.A.D. ENGINEER, SHALL SUBMIT TO THIS LATTER THE SITE SPECIFIC DRAWINGS FOR REVIEW.

(e) THIS P.A.D. SHALL BEAR THE DATE AND ORIGINAL SEAL AND SIGNATURE OF THE PROFESSIONAL ENGINEER THAT PREPARED IT.

NOTES:

WHEN EDGE DISTANCE EQUAL OR GREATER THAN 2" AND LESS THAN MIN. EDGE DISTANCE SPECIFIED ABOVE, THE ANCHOR SPACE IN ANCHOR CHARTS ON THE DRAWINGS MUST MULTIPLY BY FOLLOWING REDUCTION FACTOR:

ANCHOR TYPE A, & A1:	REDUCTION FACTOR = 0.80
ANCHOR TYPE B & B1:	REDUCTION FACTOR = 0.67
ANCHOR TYPE C & C1:	REDUCTION FACTOR = 0.80
ANCHOR TYPE E:	REDUCTION FACTOR = 0.80
ANCHOR TYPE F:	REDUCTION FACTOR = 0.67

PLEASE NOTE THIS INSTALLATION ARE ONLY VALID FOR THE RESULTING ANCHOR SPACE EQUAL OR GREATER THAN 3".

REDUCTION FACTOR MULTIPLY DESIGN LOAD ON SHEET 5 THRU SHEET 15, HAS TO BE GREATER THAN PROJECT DESIGN LOAD.

TYPICAL ANCHORS: (SEE CHARTS FOR ANCHOR SPACING)

TYPE A. 1/4" DIA. TAPCON BY ITW BUILDEX (Fu = 120 KSI, Fy = 92 KSI)
INTO CONCRETE fc'=3000 PSI
1-3/4" MIN. EMBED
2-1/2" MIN. EDGE DISTANCE

TYPE A1. INTO CONCRETE BLOCK
1-1/4" MIN. EMBED
2-1/2" MIN. EDGE DISTANCE

TYPE B. 1/4"-20 CALK-IN BY 'POWERS' FASTENERS
INTO CONCRETE fc'=3000 PSI
7/8" MIN. EMBED
3" MIN. EDGE DISTANCE

TYPE B1. INTO CONCRETE BLOCK
7/8" MIN. EMBED
3" MIN. EDGE DISTANCE

TYPE C. 1/4" CRETE-FLEX SS4 MASONRY ANCHOR BY "ELCO"
INTO CONCRETE fc'=3000 PSI
1 3/4" MIN. EMBED
2 1/2" MIN. EDGE DISTANCE

TYPE C1. INTO CONCRETE BLOCK
1 1/4" MIN. EMBED
2 1/2" MIN. EDGE DISTANCE

TYPE D. 1/4" DIA. ULTRACON BY ELCO (Fu = 177 KSI, Fy = 155 KSI)
INTO CONCRETE fc'=3000 PSI
1-3/4" MIN. EMBED
2-1/2" MIN. EDGE DISTANCE

TYPE D1. INTO CONCRETE BLOCK
1-1/4" MIN. EMBED
2-1/2" MIN. EDGE DISTANCE

TYPE E. 1/4" DIA. TAPPER+ BY "POWERS"
INTO CONCRETE fc' = 3000 PSI
1-3/4" MIN. EMBED
2-1/2" MIN. EDGE DISTANCE

TYPE E1. INTO CONCRETE BLOCK
1-1/4" MIN. EMBED
2" MIN. EDGE DISTANCE

TYPE F. 1/4" - 20 "ALL POINTS" SOLID - SET ANCHORS
INTO CONCRETE fc' = 3000 PSI
7/8" MIN. EMBED
3" MIN. EDGE DISTANCE

TYPE F1. INTO CONCRETE BLOCK
7/8" MIN. EMBED
3" MIN. EDGE DISTANCE

TYPE G 1/4" DIA. LAG SCREWS (Fy = 60 KSI)
INTO WOOD STRUCTURAL
1-1/2" MIN. THREADED EMBED
1-1/2" MIN. EDGE DISTANCE

TYPE H. 5/16" DIA. ULTRACON BY ELCO (Fu = 177 KSI, Fy = 155 KSI)
INTO WOOD STRUCTURE
1-1/2" MIN. EMBED
1-5/8" MIN. EDGE DISTANCE

Approved as complying with the Florida Building Code
Date 09/13/2012
NOA# 12-0514.14
Miami Dade Product Control
By

MIAMI DADE COUNTY

YIPING WANG LICENSE 65983
YIPING WANG, P.E.
FLORIDA REGISTRATION
PE #65983
C.A.N. 28677
STATE OF FLORIDA
PROFESSIONAL ENGINEER

MAY 11 2012

REVISIONS	
NO/DATE	DESCRIPTION

MCY ENGINEERING, INC.
GLAZING CONSULTANTS
8501 SW 124 AVE. STE. 205A
MIAMI, FL 33183
P: 305.271.0117
F: 786.573.5063
www.MCYEngineering.com
MCY.Engineering@Att.net

GSS - 1 GENESIS SHUTTER SYSTEM

NFC ALUMINUM INC.
9811 NW 80 AVE. BAY 7A / 7B
HIALEAH GARDENS, FL. 33016
P: (305) 733 - 6235

DATE	05-11-12
SCALE	AS NOTED
DRAWN	M.M
PROJECT	MCY 12-096

DRAWING NO.
AD12-41

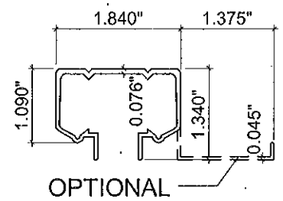

1 NFC100-01 6063-T6
STANDARD CEILING TRACK

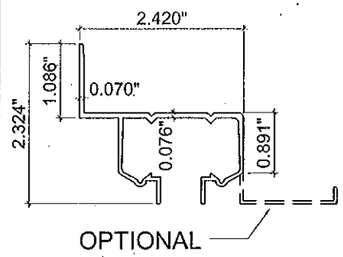

2 NFC100-02 6063-T6
STANDARD WALL TRACK

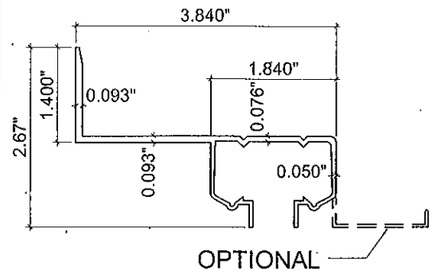

3 NFC100-03 6063-T6
STANDARD 2" BUILD OUT

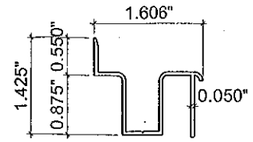

4 NFC100-04 6063-T6
STANDARD ADJ. TOP SILL

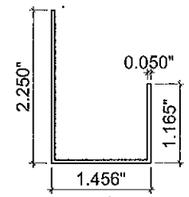

5 NFC100-05 6063-T6
STANDARD ADJ. BOT. SILL

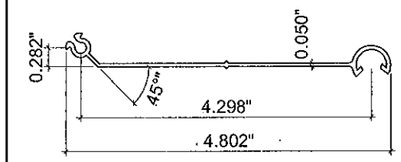

7 NFC100-07 6063-T6
Fy = 29.7 ksi Fu = 34.0 ksi

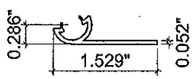

6 NFC100-06 6063-T6
180° STARTER

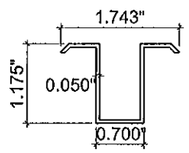

8 NFC100-08 6063-T6
TRENCH TRACK
STANDARD TRACK (S.T.)

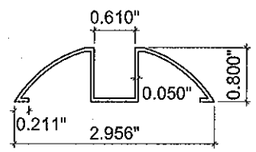

9 NFC100-09 6063-T6
WALK OVER TRACK
STANDARD TRACK (S.T.)

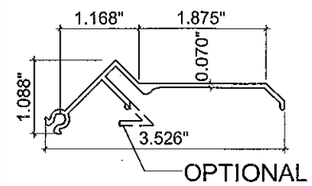

10 NFC100-10 6063-T6
CENTER MATE

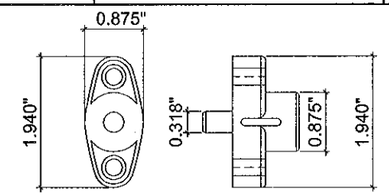

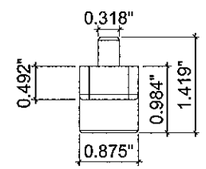

19 PUSH LOCK

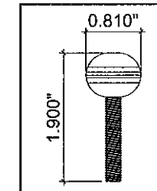

22 THUMB SCREW

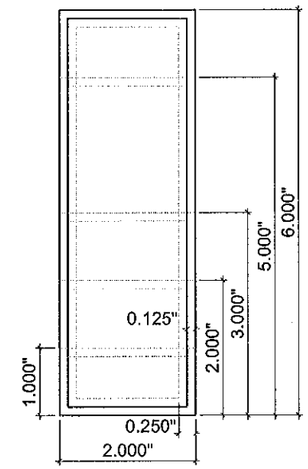

21 ALUMINUM TUBE
6063-T6
1X2X1/8"; 2X2X1/8";
2X3X1/8"; 2X5X1/8";
2X5X1/4"

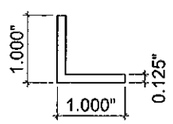

11 1"x1" Alum. Angle 6063-T6
STANDARD TRACK (S.T.)

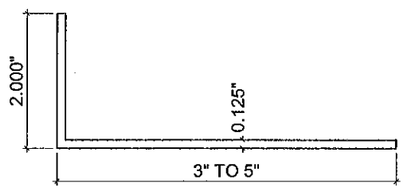

12 2" x 1/8" THK. Alum. Angle
6063-T6

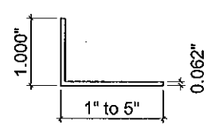

13 1"x1/16" THK. Alum. Angle
6063-T6

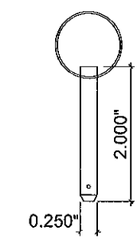

14 HITCH PIN

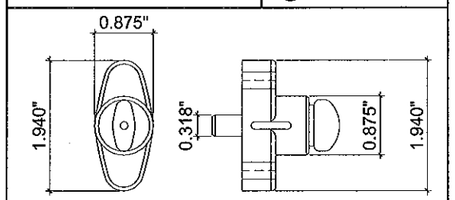

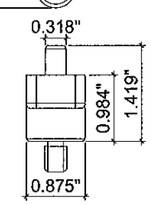

20 EGRESS LOCK

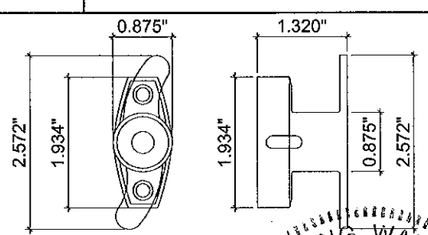

23 PUSH LOCK W / HANDLE

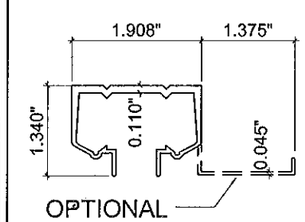

15 NFC100-11 6005-T5
HEAVY DUTY CEILING TRACK

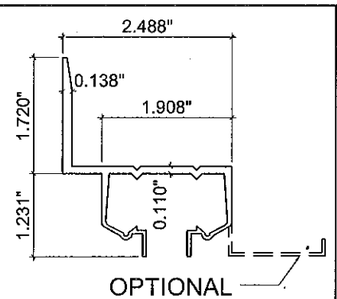

16 NFC100-12 6005-T5
HEAVY DUTY WALL TRACK

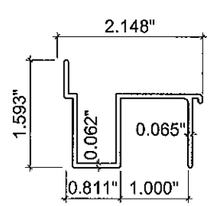

17 NFC100-13 6063-T6
HEAVY DUTY ADJ. TOP SILL

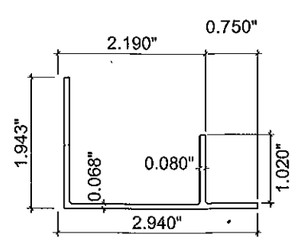

18 NFC100-14 6063-T6
HEAVY DUTY ADJ. BOT. SILL

Approved as complying with the
Florida Building Code
Date 09/13/2012
NOA# 12-0514.14
Miami Dade Product Control
By

MIAMI DADE COUNTY

YIPING WANG
LICENSE
YIPING WANG
FLORIDA REGISTRATION
PE #55983
C.A.N. 28677
STATE OF FLORIDA
PROFESSIONAL ENGINEER

MAY 11 2012

REVISIONS	
NO	DATE	DESCRIPTION

MCY ENGINEERING, INC.
GLAZING CONSULTANTS
8501 SW 124 AVE. STE. 205A
MIAMI, FL 33183
P: 305.271.0117
F: 786.573.5063
www.MCYEngineering.com
MCY.Engineering@Att.net

GSS - 1 GENESIS SHUTTER SYSTEM

NFC ALUMINUM INC.
9811 NW 80 AVE. BAY 7A / 7B
HIALEAH GARDENS, FL. 33016
P: (305) 733 - 6235

DATE	05-11-12
SCALE	AS NOTED
DRAWN	M.M
PROJECT	MCY 12-096

DRAWING NO.
AD12-41

MAX. SHUTTER SPAN - "L"

MAX. DESIGN LOAD	WITH STANDARD TRACK		WITH HEAVY DUTY TRACK	
	DUE TO POSITIVE LOAD	DUE TO NEGATIVE LOAD	DUE TO POSITIVE LOAD	DUE TO NEGATIVE LOAD
(PSF)	(INCH)	(INCH)	(INCH)	(INCH)
40	123"	123"	143"	141"
45	123"	123"	139"	137"
50	120"	120"	135"	133"
55	114"	114"	132"	130"
60	109"	109"	129"	128"
65	105"	105"	129"	124"
70	101"	101"	124"	119"
75	98"	98"	119"	115"
80	94"	94"	115"	111"
85	92"	92"	111"	108"
90	89"	89"	108"	105"
95	87"	86"	105"	102"
100	84"	81"	102"	100"
105	82"	77"	100"	97"
110	81"	74"	95"	95"
115	79"	71"	93"	91"
120	77"	68"	91"	87"
125	75"	65"	89"	84"
130	74"	63"	87"	81"
135	72"	60"	85"	78"
140	69"	58"	82"	75"
145	67"	56"	79"	72"
150	65"	54"	76"	70"
155	--	--	74"	68"
160	--	--	71"	66"
165	--	--	69"	64"
170	--	--	67"	62"
175	--	--	65"	60"
180	--	--	59"	58"
185	--	--	--	57"
190	--	--	--	55"
195	--	--	--	54"
200	--	--	--	52"

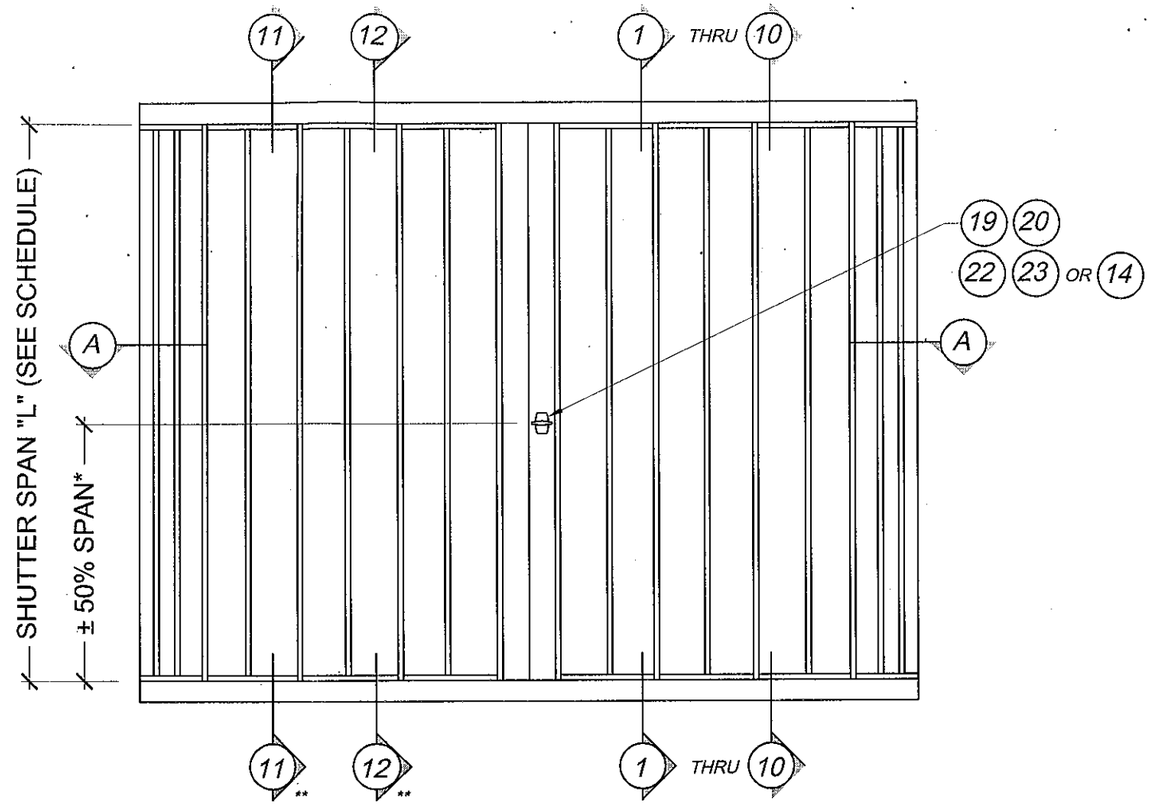

TYPICAL ELEVATION

** SEE NOTES*
*** FOR HEAVY DUTY ONLY*

NOTES:

1) LOCK SHALL BE LOCATED WITHIN 18" OF MID-SPAN;
2) FOR SHUTTER SPAN ≥ 12 FT USE (2) LOCKS AT 1/3 SPAN;
3) LOCK (22) AND (14) USED FOR STANDARD TRACK ONLY.

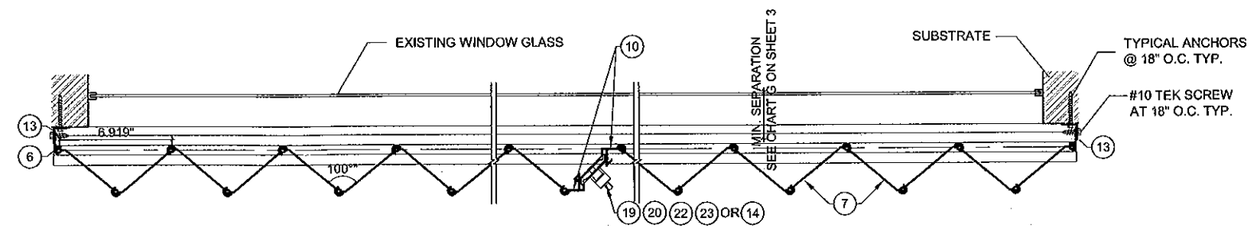

A SECTION W / STARTER AT ENDS

INSTRUCTION:

STEP 1 DETERMINE DESIGN WIND LOAD REQUIREMENT BASED ON APPLICABLE ASCE 7 STANDARD.

STEP 2 CHECK SHUTTER CAPACITY FOR A GIVEN SHUTTER SPAN USING CHARTS ON SHEET 3. MAX. DESIGN LOAD FROM CHART HAS TO BE EQUAL OR GREATER THAN DESIGN WIND LOAD FROM STEP 1.

STEP 3 USING CHARTS ON SHEET 4 THRU SHEET 15 SELECT ANCHOR TYPE AND SPACING BASED ON DESIGN LOAD AND SHUTTER SPAN FOR THE ANCHOR DETAIL USED.

Approved as complying with the Florida Building Code
Date 09/13/2012
NOA# 12-0514.14
Miami Dade Product Control
By
MIAMI DADE COUNTY

YIPING WANG LICENSE No. 55983 STATE OF FLORIDA PROFESSIONAL ENGINEER
YIPING WANG, P.E.
FLORIDA REGISTRATION
PE #55983
C.A.N. 28677

MAY 11 2012

REVISIONS

NO	DATE	DESCRIPTION

MCY ENGINEERING, INC.
GLAZING CONSULTANTS
8501 SW 124 AVE. STE. 205A
MIAMI, FL. 33183
P: 305.271.0117
F: 786.573.5063
www.MCYEngineering.com
MCY.Engineering@Att.net

GSS - 1 GENESIS SHUTTER SYSTEM

NFC ALUMINUM INC.
9811 NW 80 AVE. BAY 7A / 7B
HIALEAH GARDENS, FL. 33016
P: (305) 733 - 6235

DATE	05-11-12
SCALE	AS NOTED
DRAWN	M.M
PROJECT	MCY 12-096

DRAWING NO.
AD12-41

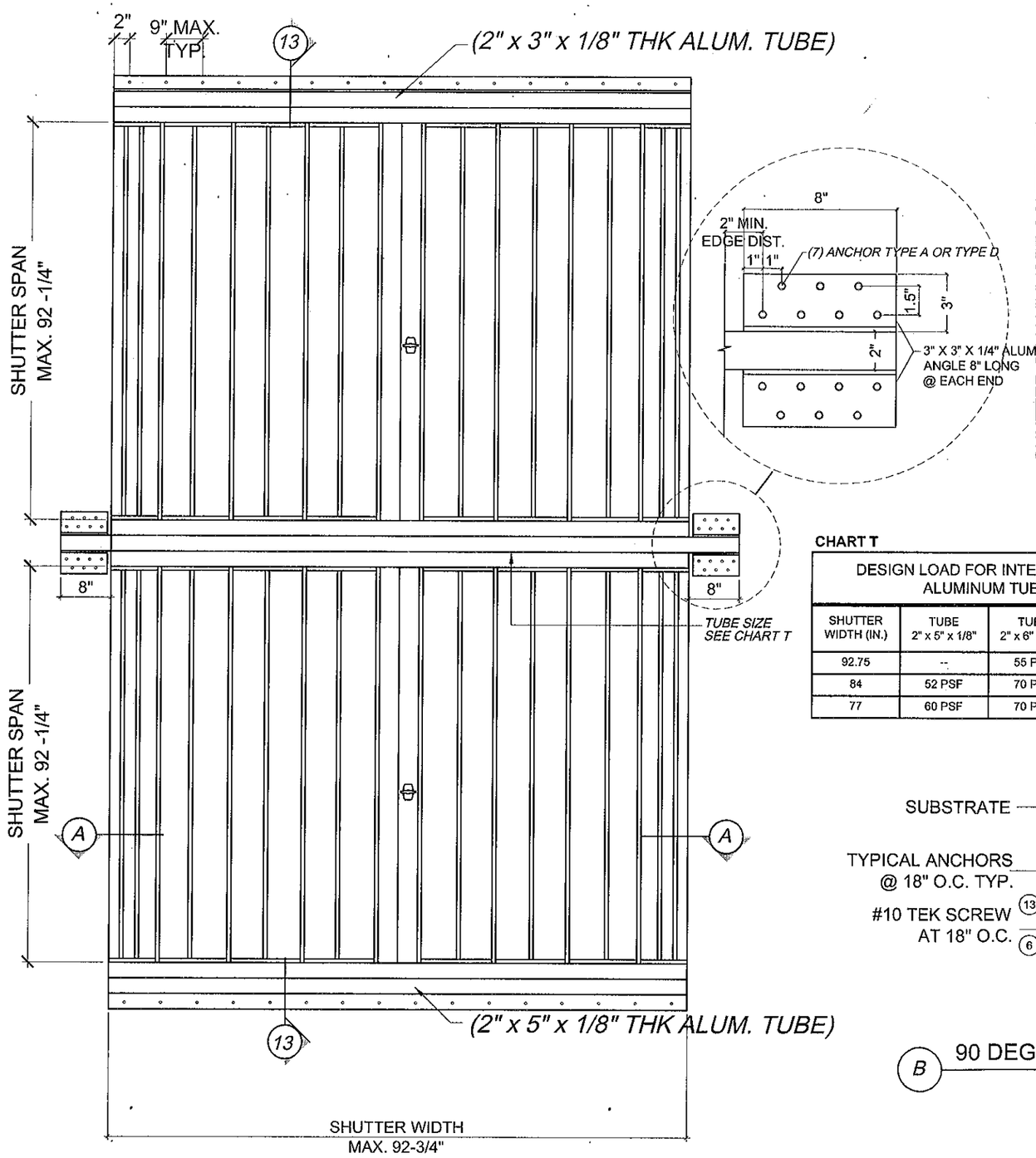

ELEVATION OPTION 1

HEAVY DUTY TRACK ONLY

CHART T

DESIGN LOAD FOR INTERMEDIATE ALUMINUM TUBE			
SHUTTER WIDTH (IN.)	TUBE 2" x 5" x 1/8"	TUBE 2" x 6" x 1/8"	TYPE 2" x 5" x 1/4"
92.75	--	55 PSF	70 PSF
84	52 PSF	70 PSF	70 PSF
77	60 PSF	70 PSF	70 PSF

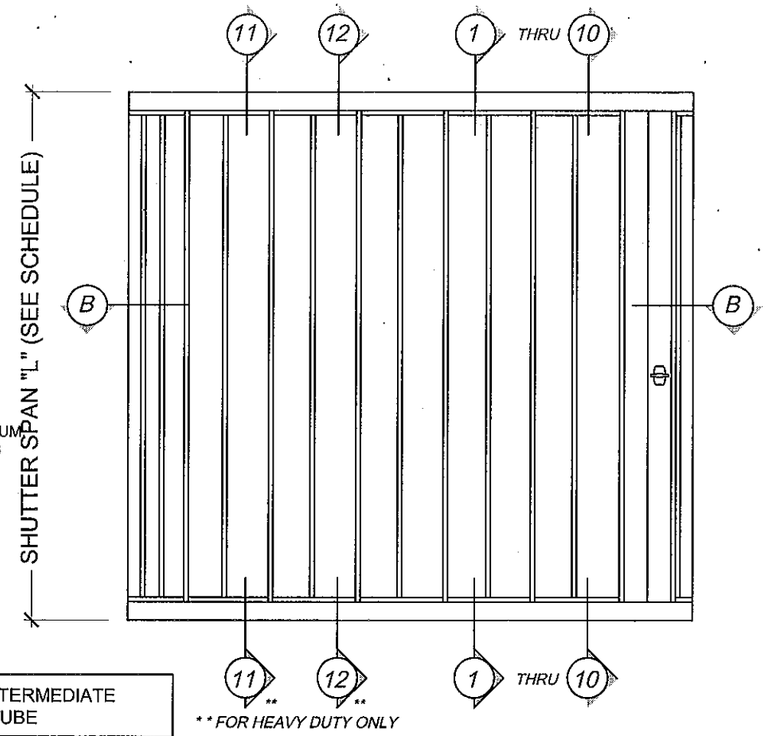

ELEVATION OPTION 2

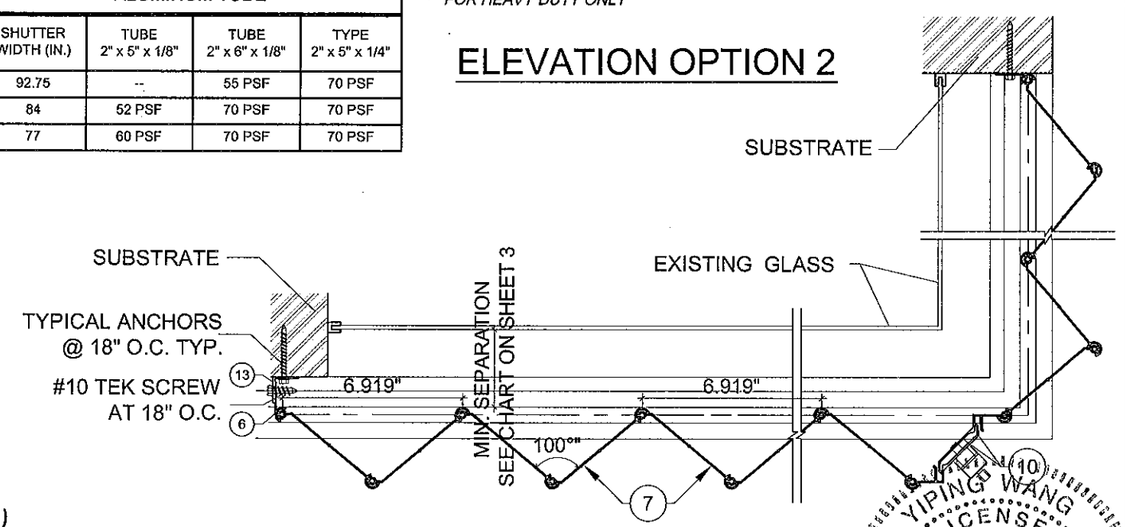

B 90 DEGREE SHUTTER OPTION

Approved as complying with the Florida Building Code
Date 09/13/2012
NOA# 12-0514.14
Miami Dade Product Control
By
MIAMI DADE COUNTY

YIPING WANG
LICENSE
No 55983
YIPING WANG, P.E.
FLORIDA REGISTRATION
PE #55983
C.A.N. 28677
STATE OF
FLORIDA
PROFESSIONAL ENGINEER

MAY 11 2012

REVISIONS		
NO	DATE	DESCRIPTION

MCY ENGINEERING, INC.
GLAZING CONSULTANTS
8501 SW 124 AVE. STE. 205A
MIAMI, FL. 33183
P: 305.271.0117
F: 786.573.5063
www.MCYEngineering.com
MCY.Engineering@Att.net

GSS - 1 GENESIS SHUTTER SYSTEM

NFC ALUMINUM INC.
9811 NW 80 AVE. BAY 7A / 7B
HIALEAH GARDENS, FL. 33016
P: (305) 733 - 6235

DATE	05-11-12
SCALE	AS NOTED
DRAWN	M.M
PROJECT	MCY 12-096

DRAWING NO.
AD12-41

DESIGN LOAD VS SPAN AND ANCHOR SPACING CHART

MAX. DESIGN LOAD	SHUTTER SPAN	SECTION 1 (TOP)				
		CONCRETE	CONCRETE	WOOD STRUCTURE	CONCRETE BLOCK	CONCRETE BLOCK
		ANCHOR SPACING (in.)	ANCHOR SPACING (in.)	ANCHOR SPACING (in.)	ANCHOR SPACING (in.)	ANCHOR SPACING (in.)
(PSF)	(INCH)	TYPE A / B / C / F	TYPE E	TYPE H / G	TYPE A1 / B1 / D1 / E1	TYPE C1 / F1
40	60"	12.0	12.0	12.0	6.7	11.7
	78"	12.0	11.5	12.0	5.2	9.0
	96"	12.0	9.3	12.0	4.2	7.3
	114"	10.7	7.9	12.0	3.5	6.2
	120"	10.1	7.5	12.0	3.4	5.9
	132"	9.2	6.8	10.9	3.1	5.3
	141"	8.6	6.4	10.2	-	5.0
50	60"	12.0	11.9	12.0	5.4	9.4
	78"	12.0	9.2	12.0	4.1	7.2
	96"	10.1	7.5	12.0	3.4	5.9
	114"	8.5	6.3	10.1	-	4.9
	120"	8.1	6.0	9.6	-	4.7
	132"	7.4	5.4	8.7	-	4.3
60	60"	12.0	10.0	12.0	4.5	7.8
	78"	10.4	7.7	12.0	3.5	6.0
	96"	8.4	6.2	10.0	-	4.9
	114"	7.1	5.2	8.4	-	4.1
	126"	6.4	4.7	7.6	-	3.7
70	60"	11.6	8.5	12.0	3.8	6.7
	78"	8.9	6.6	10.6	-	5.1
	96"	7.2	5.3	8.6	-	4.2
	114"	6.1	4.5	7.2	-	3.5
	118"	5.8	4.3	6.9	-	3.4
80	60"	10.1	7.5	12.0	3.4	5.9
	78"	7.8	5.7	9.2	-	4.5
	96"	6.3	4.7	7.5	-	3.7
	111"	5.5	4.0	6.5	-	3.2
90	60"	9.0	6.6	10.7	3.0	5.2
	78"	6.9	5.1	8.2	-	4.0
	96"	5.6	4.1	6.7	-	3.3
	105"	5.1	3.8	6.1	-	-
100	60"	8.1	6.0	9.6	-	4.7
	78"	6.2	4.6	7.4	-	3.6
	96"	5.1	3.7	6.0	-	-
	99"	4.9	3.6	5.8	-	-
120	48"	8.4	6.2	10.0	-	4.9
	60"	6.7	5.0	8.0	-	3.9
	78"	5.2	3.8	6.2	-	3.0
	91"	4.4	3.3	5.3	-	-
140	48"	7.2	5.3	8.6	-	4.2
	60"	5.8	4.3	6.9	-	3.3
	78"	4.4	3.3	5.3	-	-
	81"	4.3	3.2	5.1	-	-
150	48"	6.3	4.7	7.5	-	3.7
	60"	5.1	3.7	6.0	-	-
	70"	4.3	3.2	5.1	-	-

DESIGN LOAD VS SPAN AND ANCHOR SPACING CHART

MAX. DESIGN LOAD	SHUTTER SPAN	SECTION 1 (BOTTOM)				
		CONCRETE	WOOD STRUCTURE	CONCRETE	CONCRETE BLOCK	CONCRETE BLOCK
		ANCHOR SPACING (in.)	ANCHOR SPACING (in.)	ANCHOR SPACING (in.)	ANCHOR SPACING (in.)	ANCHOR SPACING (in.)
(PSF)	(INCH)	TYPE A / B / C / F	TYPE H / G	TYPE E	TYPE A1 / B1 / D1 / E1	TYPE C1 / F1
40	60"	12.0	12.0	12.0	5.5	9.5
	78"	12.0	12.0	9.3	4.2	7.3
	96"	10.3	12.0	7.6	3.4	5.9
	114"	8.6	10.3	6.4	-	5.0
	120"	8.2	9.7	6.1	-	4.7
	132"	7.5	8.9	5.5	-	4.3
	141"	7.0	8.3	5.2	-	4.0
50	60"	12.0	12.0	9.7	4.4	7.6
	78"	10.1	12.0	7.5	3.4	5.8
	96"	8.2	9.7	6.1	-	4.7
	114"	6.9	8.2	5.1	-	4.0
	120"	6.6	7.8	4.8	-	3.8
	132"	6.0	7.1	4.4	-	3.5
60	60"	10.9	12.0	8.1	3.6	6.3
	78"	8.4	10.0	6.2	-	4.9
	96"	6.8	8.1	5.0	-	4.0
	114"	5.8	6.8	4.3	-	3.3
	126"	5.2	6.2	3.8	-	3.0
70	60"	9.4	11.1	6.9	3.1	5.4
	78"	7.2	8.6	5.3	-	4.2
	96"	5.9	7.0	4.3	-	3.4
	114"	4.9	5.9	3.6	-	-
	118"	4.7	5.6	3.5	-	-
80	60"	8.2	9.7	6.1	-	4.7
	78"	6.3	7.5	4.7	-	3.7
	96"	5.1	6.1	3.8	-	-
	111"	4.4	5.3	3.3	-	-
90	60"	7.3	8.7	5.4	-	4.2
	78"	5.6	6.7	4.1	-	3.2
	96"	4.6	5.4	3.4	-	-
	105"	4.2	4.9	3.1	-	-
100	60"	6.6	7.8	4.8	-	3.8
	78"	5.1	6.0	3.7	-	-
	96"	4.1	4.9	3.0	-	-
	99"	4.0	4.7	-	-	-
120	48"	6.8	8.1	5.0	-	4.0
	60"	5.5	6.5	4.0	-	3.2
	78"	4.2	5.0	3.1	-	-
	91"	3.6	4.3	-	-	-
140	48"	5.9	7.0	4.3	-	3.4
	60"	4.7	5.6	3.5	-	-
	78"	3.6	4.3	-	-	-
	81"	3.5	4.1	-	-	-
150	48"	5.1	6.1	3.8	-	-
	60"	4.1	4.9	3.0	-	-
	70"	3.5	4.1	-	-	-

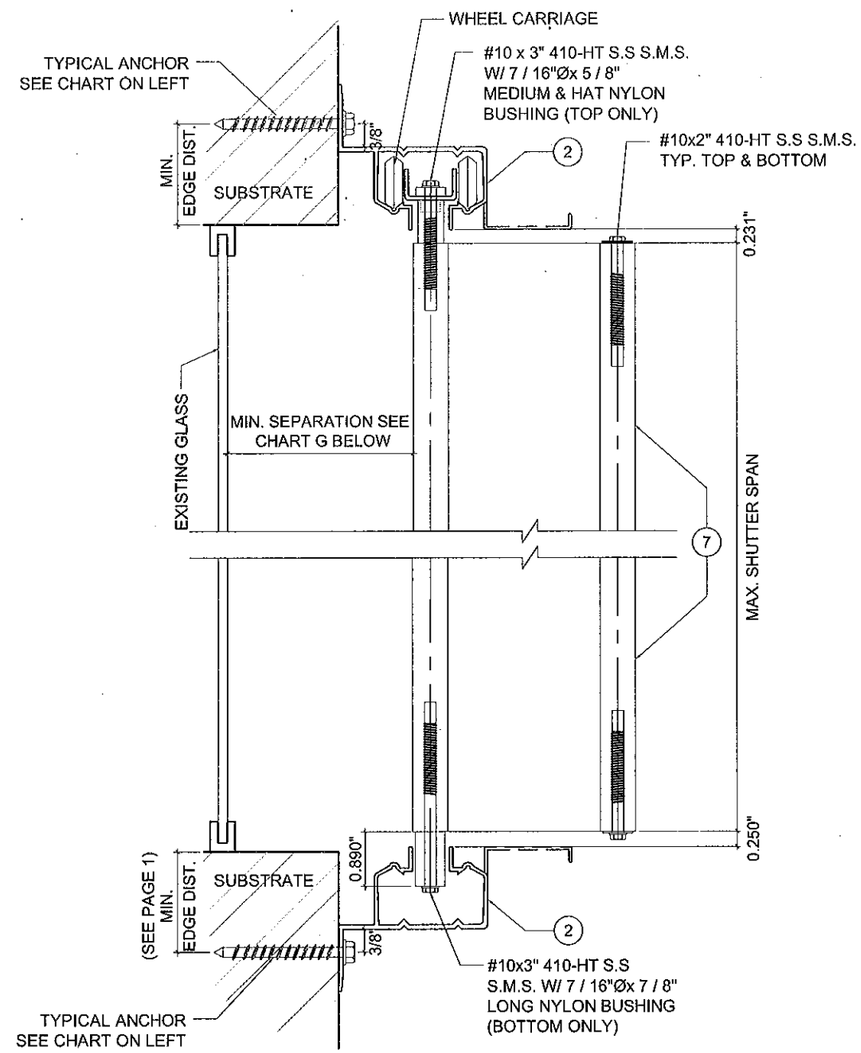

1 WALL MOUNTING INSTALLATION
STANDARD TRACK

CHART G

GLASS SEPARATION CHART FOR STANDARD & HEAVY DUTY	
SHUTTER SPAN	SEPARATION
SPAN ≤ 60"	2 - 1/2"
60" < SPAN ≤ 90"	3 - 1/4"
90" < SPAN ≤ 120"	4 - 1/4"
120" < SPAN	4 - 3/4"

Approved as complying with the Florida Building Code
Date 09/13/2012
NOA# 12-0514.14
Miami Dade Product Control
By
MIAMI DADE COUNTY

YIPING WANG
LICENSE
YIPING WANG P.E.
FLORIDA REGISTRATION
PE #55983
C.A.N. 28677
STATE OF FLORIDA
PROFESSIONAL ENGINEER

MAY 11 2012

REVISIONS		
NO	DATE	DESCRIPTION

MCY ENGINEERING, INC.
GLAZING CONSULTANTS
8501 SW 124 AVE. STE. 205A
MIAMI, FL. 33183
P: 305.271.0117
F: 786.573.5063
www.MCYEngineering.com
MCY.Engineering@Att.net

GSS - 1 GENESIS SHUTTER SYSTEM

NFC ALUMINUM INC.
9811 NW 80 AVE. BAY 7A / 7B
HIALEAH GARDENS, FL. 33016
P: (305) 733 - 6235

DATE	05-11-12
SCALE	AS NOTED
DRAWN	M.M
PROJECT	MCY 12-096

DRAWING NO.
AD12-41

DESIGN LOAD VS SPAN AND ANCHOR SPACING CHART

MAX. DESIGN LOAD	SHUTTER SPAN	SECTION 2 & 9 (TOP)				
		CONCRETE	CONCRETE	WOOD STRUCTURE	CONCRETE BLOCK	CONCRETE BLOCK
		ANCHOR SPACING (in.)	ANCHOR SPACING (in.)	ANCHOR SPACING (in.)	ANCHOR SPACING (in.)	ANCHOR SPACING (in.)
(PSF)	(INCH)	TYPE A / B / C / F	TYPE E	TYPE H / G	TYPE A1 / B1 / D1 / E1	TYPE C1 / F1
40	60"	12.0	12.0	12.0	9.1	12.0
	78"	12.0	12.0	12.0	7.0	12.0
	96"	12.0	12.0	12.0	5.7	9.9
	114"	12.0	10.7	12.0	4.8	8.4
	120"	12.0	10.1	12.0	4.6	7.9
	132"	12.0	9.2	12.0	4.2	7.2
	141"	11.7	8.6	12.0	3.9	6.8
50	60"	12.0	12.0	12.0	7.3	12.0
	78"	12.0	12.0	12.0	5.6	9.8
	96"	12.0	10.1	12.0	4.6	7.9
	114"	11.6	8.5	12.0	3.9	6.7
	120"	11.0	8.1	12.0	3.7	6.4
	132"	10.0	7.4	11.9	3.3	5.8
60	60"	12.0	12.0	12.0	6.1	10.6
	78"	12.0	10.4	12.0	4.7	8.1
	96"	11.5	8.4	12.0	3.8	6.6
	114"	9.6	7.1	11.4	3.2	5.6
	126"	8.7	6.4	10.4	-	5.0
70	60"	12.0	11.6	12.0	5.2	9.1
	78"	12.0	8.9	12.0	4.0	7.0
	96"	9.8	7.2	11.6	3.3	5.7
	114"	8.3	6.1	9.8	-	4.8
	118"	7.9	5.8	9.4	-	4.6
80	60"	12.0	10.1	12.0	4.6	7.9
	78"	10.6	7.8	12.0	3.5	6.1
	96"	8.6	6.3	10.2	-	5.0
	111"	7.4	5.5	8.8	-	4.3
90	60"	12.0	9.0	12.0	4.1	7.1
	78"	9.4	6.9	11.1	3.1	5.4
	96"	7.6	5.6	9.1	-	4.4
	105"	7.0	5.1	8.3	-	4.0
100	60"	11.0	8.1	12.0	3.7	6.4
	78"	8.5	6.2	10.0	-	4.9
	96"	6.9	5.1	8.2	-	4.0
	99"	6.7	4.9	7.9	-	3.9
120	48"	11.5	8.4	12.0	3.8	6.6
	60"	9.2	6.8	10.9	3.0	5.3
	78"	7.0	5.2	8.4	-	4.1
	91"	6.0	4.5	7.2	-	3.5
140	48"	9.8	7.2	11.6	3.3	5.7
	60"	7.9	5.8	9.3	-	4.5
	78"	6.0	4.5	7.2	-	3.5
	81"	5.8	4.3	6.9	-	3.4
150	48"	8.6	6.3	10.2	-	5.0
	60"	6.9	5.1	8.2	-	4.0
	70"	5.8	4.3	6.9	-	3.4

DESIGN LOAD VS SPAN AND ANCHOR SPACING CHART

MAX. DESIGN LOAD	SHUTTER SPAN	SECTION 2 (BOTTOM)				
		CONCRETE	CONCRETE	WOOD STRUCTURE	CONCRETE BLOCK	CONCRETE BLOCK
		ANCHOR SPACING (in.)	ANCHOR SPACING (in.)	ANCHOR SPACING (in.)	ANCHOR SPACING (in.)	ANCHOR SPACING (in.)
(PSF)	(INCH)	TYPE A / B / C / F	TYPE E	TYPE H / G	TYPE A1 / B1 / D1 / E1	TYPE C1 / F1
40	60"	12.0	12.0	12.0	7.5	12.0
	78"	12.0	12.0	12.0	5.8	10.1
	96"	12.0	10.4	12.0	4.7	8.2
	114"	11.9	8.8	12.0	4.0	6.9
	120"	11.3	8.3	12.0	3.8	6.5
	132"	10.3	7.6	12.0	3.4	5.9
	141"	9.6	7.1	11.4	3.2	5.6
50	60"	12.0	12.0	12.0	6.0	10.5
	78"	12.0	10.3	12.0	4.6	8.0
	96"	11.3	8.3	12.0	3.8	6.5
	114"	9.5	7.0	11.3	3.2	5.5
	120"	9.0	6.7	10.7	3.0	5.2
	132"	8.2	6.1	9.8	-	4.8
60	60"	12.0	11.1	12.0	5.0	8.7
	78"	11.6	8.6	12.0	3.9	6.7
	96"	9.4	7.0	11.2	3.1	5.4
	114"	7.9	5.9	9.4	-	4.6
	126"	7.2	5.3	8.5	-	4.2
70	60"	12.0	9.5	12.0	4.3	7.5
	78"	9.9	7.3	11.8	3.3	5.7
	96"	8.1	6.0	9.6	-	4.7
	114"	6.8	5.0	8.1	-	3.9
	118"	6.5	4.8	7.7	-	3.8
80	60"	11.3	8.3	12.0	3.8	6.5
	78"	8.7	6.4	10.3	-	5.0
	96"	7.1	5.2	8.4	-	4.1
	111"	6.1	4.5	7.3	-	3.5
90	60"	10.1	7.4	11.9	3.3	5.8
	78"	7.7	5.7	9.2	-	4.5
	96"	6.3	4.6	7.5	-	3.6
	105"	5.7	4.2	6.8	-	3.3
100	60"	9.0	6.7	10.7	3.0	5.2
	78"	7.0	5.1	8.3	-	4.0
	96"	5.7	4.2	6.7	-	3.3
	99"	5.5	4.0	6.5	-	3.2
120	48"	9.4	7.0	11.2	3.1	5.4
	60"	7.5	5.6	8.9	-	4.4
	78"	5.8	4.3	6.9	-	3.4
	91"	5.0	3.7	5.9	-	-
140	48"	8.1	6.0	9.6	-	4.7
	60"	6.5	4.8	7.7	-	3.7
	78"	5.0	3.7	5.9	-	-
	81"	4.8	3.5	5.7	-	-
150	48"	7.1	5.2	8.4	-	4.1
	60"	5.7	4.2	6.7	-	3.3
	70"	4.8	3.5	5.7	-	-

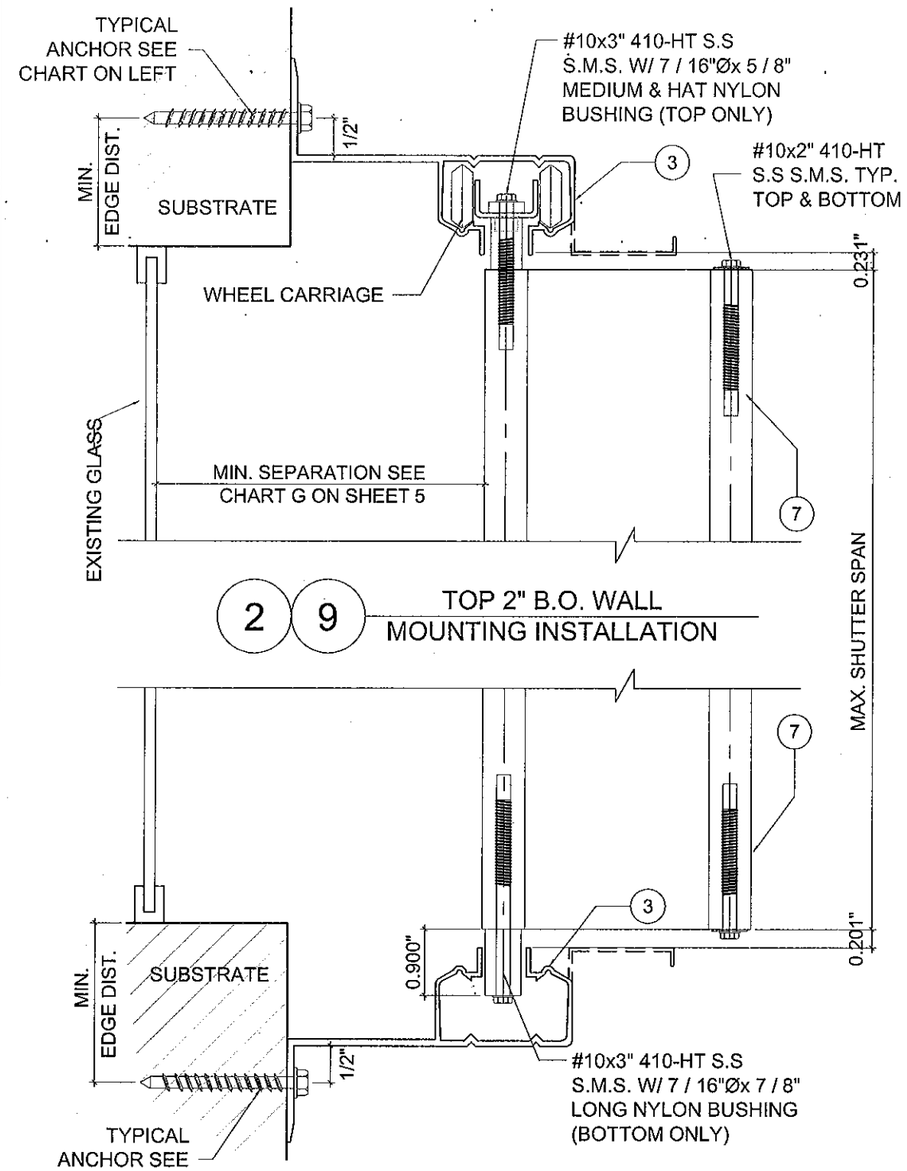

Approved as complying with the Florida Building Code
Date 09/13/2012
NOA# 12-0514.14
Miami Dade Product Control
By
MIAMI DADE COUNTY

YIPING WANG
LICENSE
YIPING WANG, P.E.
FLORIDA REGISTRATION
PE #55983
C.A.N. 28677
STATE OF FLORIDA
PROFESSIONAL ENGINEER

MAY 11 2012

REVISIONS	
NO/DATE	DESCRIPTION

MCY ENGINEERING, INC.
GLAZING CONSULTANTS
8501 SW 124 AVE. STE. 205A
MIAMI, FL. 33183
P: 305.271.0117
F: 786.573.5063
www.MCYEngineering.com
MCY.Engineering@Att.net

GSS - 1 GENESIS SHUTTER SYSTEM

NFC ALUMINUM INC.
9811 NW 80 AVE. BAY 7A / 7B
HIALEAH GARDENS, FL. 33016
P: (305) 733 - 6235

DATE	05-11-12
SCALE	AS NOTED
DRAWN	M.M
PROJECT	MCY 12-096

DRAWING NO.
AD12-41

DESIGN LOAD VS SPAN AND ANCHOR SPACING CHART

MAX. DESIGN LOAD	SHUTTER SPAN	SECTION 3 - 6 (TOP)					
		CONCRETE	CONCRETE	CONCRETE	WOOD	CONCRETE BLOCK	CONCRETE BLOCK
		ANCHOR SPACING (in.)	ANCHOR SPACING (in.)	ANCHOR SPACING (in.)	ANCHOR SPACING (in.)	ANCHOR SPACING (in.)	ANCHOR SPACING (in.)
(PSF)	(INCH)	TYPE A / B	TYPE C / F	TYPE D / E	TYPE H / G	TYPE A1 / B1 / D1	TYPE E1
40	60"	12.0	12.0	12.0	12.0	12.0	12.0
	78"	12.0	12.0	12.0	12.0	11.3	10.9
	96"	12.0	12.0	12.0	11.2	9.2	8.9
	114"	12.0	12.0	12.0	9.4	7.7	7.5
	120"	12.0	12.0	11.7	9.0	7.3	7.1
	132"	12.0	12.0	10.7	8.1	6.7	6.4
	141"	11.9	12.0	10.0	7.6	6.2	6.0
50	60"	12.0	12.0	12.0	12.0	11.9	11.4
	78"	12.0	12.0	12.0	11.1	9.2	8.8
	96"	12.0	12.0	11.8	9.0	7.4	7.2
	114"	11.9	12.0	10.0	7.6	6.3	6.0
	120"	11.3	12.0	9.5	7.2	6.0	5.7
	132"	10.3	12.0	8.6	6.5	5.4	5.2
60	60"	12.0	12.0	12.0	12.0	10.0	9.6
	78"	12.0	12.0	12.0	9.3	7.7	7.4
	96"	11.9	12.0	9.9	7.5	6.3	6.0
	114"	10.0	12.0	8.4	6.3	5.3	5.1
	126"	9.0	12.0	7.6	5.7	4.8	4.6
70	60"	12.0	12.0	12.0	10.3	8.6	8.3
	78"	12.0	12.0	10.5	8.0	6.7	6.4
	96"	10.2	12.0	8.6	6.5	5.4	5.2
	114"	8.6	11.9	7.2	5.4	4.6	4.4
	118"	8.2	11.4	6.9	5.2	4.4	4.2
80	60"	12.0	12.0	12.0	9.1	7.6	7.3
	78"	11.0	12.0	9.2	7.0	5.9	5.6
	96"	9.0	12.0	7.5	5.7	4.8	4.5
	111"	7.8	10.7	6.5	4.9	4.1	3.9
90	60"	12.0	12.0	10.7	8.1	6.8	6.5
	78"	9.8	12.0	8.2	6.2	5.2	5.0
	96"	8.0	11.1	6.7	5.0	4.2	4.0
	105"	7.3	10.1	6.1	4.6	3.9	3.7
100	60"	11.5	12.0	9.7	7.3	6.1	5.8
	78"	8.9	12.0	7.4	5.6	4.7	4.5
	96"	7.2	10.0	6.0	4.5	3.8	3.6
	99"	7.0	9.7	5.9	4.4	3.7	3.5
120	48"	12.0	12.0	10.1	7.6	6.4	6.1
	60"	9.6	12.0	8.1	6.1	5.1	4.9
	78"	7.4	10.3	6.2	4.7	3.9	3.8
	91"	6.4	8.8	5.3	4.0	3.4	3.2
140	48"	10.3	12.0	8.7	6.5	5.5	5.2
	60"	8.3	11.5	6.9	5.2	4.4	4.2
	78"	6.4	8.8	5.3	4.0	3.4	3.2
	81"	6.1	8.5	5.1	3.9	3.3	3.1
150	48"	9.1	12.0	7.6	5.7	4.8	4.6
	60"	7.3	10.1	6.1	4.6	3.9	3.7
	70"	6.1	8.5	5.1	3.9	3.3	3.1

DESIGN LOAD VS SPAN AND ANCHOR SPACING CHART

MAX. DESIGN LOAD	SHUTTER SPAN	SECTION 3 (BOTTOM)				
		CONCRETE	CONCRETE	CONCRETE	CONCRETE BLOCK	CONCRETE BLOCK
		ANCHOR SPACING (in.)	ANCHOR SPACING (in.)	ANCHOR SPACING (in.)	ANCHOR SPACING (in.)	ANCHOR SPACING (in.)
(PSF)	(INCH)	TYPE A / B	TYPE C / F	TYPE D / E	TYPE A1 / B1 / D1	TYPE E1
40	60"	9.0	9.0	9.0	9.0	9.0
	78"	9.0	9.0	9.0	7.3	7.9
	96"	9.0	9.0	9.0	5.9	6.4
	114"	9.0	9.0	8.9	5.0	5.4
	120"	9.0	9.0	8.4	4.8	5.1
	132"	9.0	9.0	7.7	4.3	4.6
	141"	8.9	9.0	7.2	4.0	4.4
50	60"	9.0	9.0	9.0	7.6	8.2
	78"	9.0	9.0	9.0	5.9	6.3
	96"	9.0	9.0	8.4	4.8	5.1
	114"	8.8	9.0	7.1	4.0	4.3
	120"	8.3	9.0	6.7	3.8	4.1
	132"	7.6	9.0	6.1	3.5	3.7
60	60"	9.0	9.0	9.0	6.3	6.8
	78"	9.0	9.0	8.6	4.9	5.2
	96"	8.7	9.0	7.0	4.0	4.3
	114"	7.3	9.0	5.9	3.3	3.6
	126"	6.6	8.4	5.4	3.0	3.2
70	60"	9.0	9.0	9.0	5.4	5.8
	78"	9.0	9.0	7.4	4.2	4.5
	96"	7.4	9.0	6.0	3.4	3.7
	114"	6.3	7.9	5.1	-	3.1
	118"	6.0	7.6	4.9	-	-
80	60"	9.0	9.0	8.4	4.8	5.1
	78"	8.0	9.0	6.5	3.7	3.9
	96"	6.5	8.3	5.3	-	3.2
	111"	5.6	7.1	4.6	-	-
90	60"	9.0	9.0	7.5	4.2	4.5
	78"	7.1	9.0	5.8	3.3	3.5
	96"	5.8	7.3	4.7	-	-
	105"	5.3	6.7	4.3	-	-
100	60"	8.3	9.0	6.7	3.8	4.1
	78"	6.4	8.1	5.2	-	3.1
	96"	5.2	6.6	4.2	-	-
	99"	5.1	6.4	4.1	-	-
120	48"	8.7	9.0	7.0	4.0	4.3
	60"	7.0	8.8	5.6	3.2	3.4
	78"	5.3	6.8	4.3	-	-
	91"	4.6	5.8	3.7	-	-
140	48"	7.4	9.0	6.0	3.4	3.7
	60"	6.0	7.6	4.8	-	-
	78"	4.6	5.8	3.7	-	-
	81"	4.4	5.6	3.6	-	-
150	48"	6.5	8.3	5.3	-	3.2
	60"	5.2	6.6	4.2	-	-
	70"	4.4	5.6	3.6	-	-

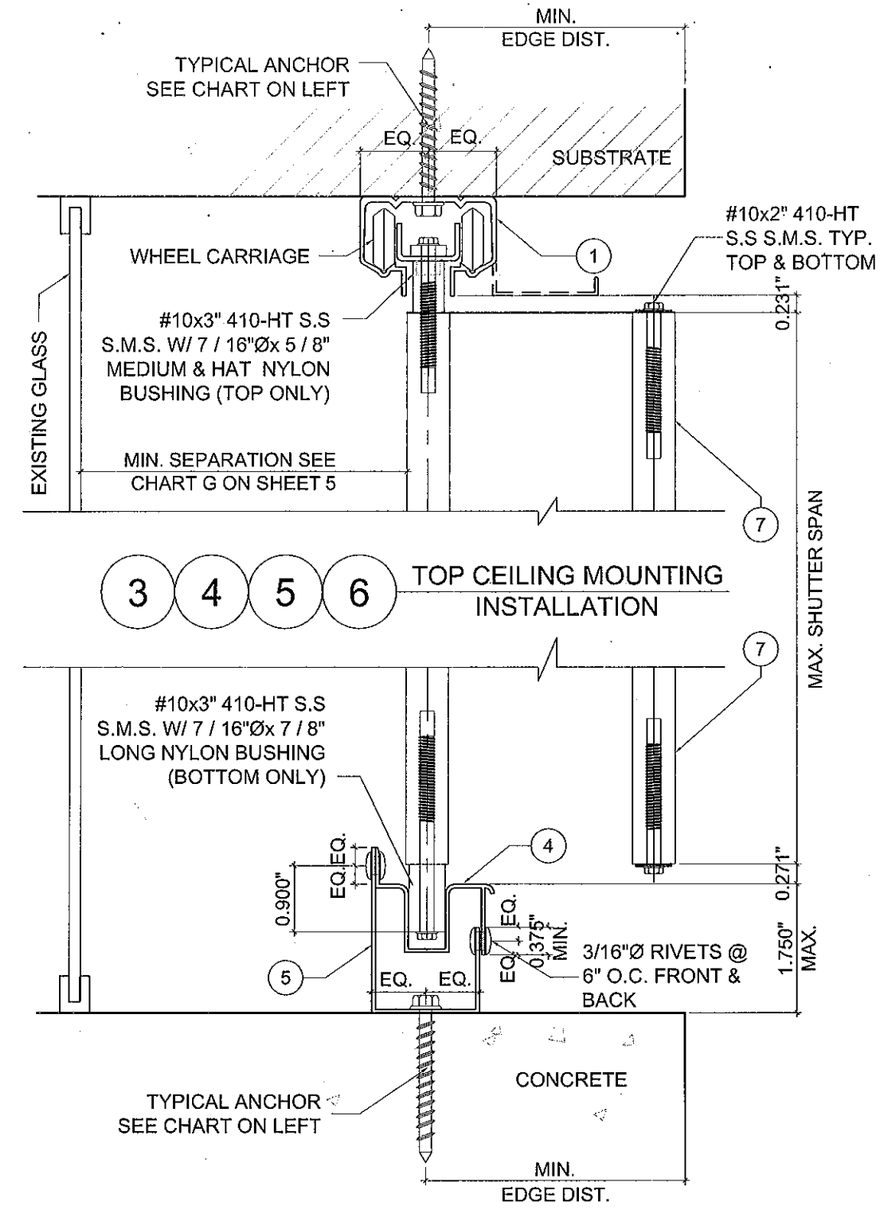

3 FLOOR TO CEILING MOUNTING INSTALLATION STANDARD TRACK

Approved as complying with the Florida Building Code
Date 09/13/2012
NOA#12-0514.14
Miami Dade Product Control
By
MIAMI DADE COUNTY

YIPING WANG LICENSE No. 55983 STATE OF FLORIDA PROFESSIONAL ENGINEER

YIPING WANG, P.E.
FLORIDA REGISTRATION
PE #55983
C.A. # 28677

MAY 11 2012

REVISIONS		
NO.	DATE	DESCRIPTION

MCY ENGINEERING, INC.
GLAZING CONSULTANTS
8501 SW 124 AVE. STE. 205A
MIAMI, FL 33183
P: 305.271.0117
F: 786.573.5063
www.MCYEngineering.com
MCY.Engineering@Att.net

GSS - 1 GENESIS SHUTTER SYSTEM

NFC ALUMINUM INC.
9811 NW 80 AVE. BAY 7A / 7B
HIALEAH GARDENS, FL. 33016
P: (305) 733 - 6235

DATE	05-11-12
SCALE	AS NOTED
DRAWN	M.M
PROJECT	MCY 12-096

DRAWING NO.
AD12-41

DESIGN LOAD VS SPAN AND ANCHOR SPACING CHART

MAX. DESIGN LOAD	SHUTTER SPAN	SECTION 4 (BOTTOM)				
		CONCRETE	CONCRETE	CONCRETE	CONCRETE BLOCK	CONCRETE BLOCK
		ANCHOR SPACING (in.)	ANCHOR SPACING (in.)	ANCHOR SPACING (in.)	ANCHOR SPACING (in.)	ANCHOR SPACING (in.)
(PSF)	(INCH)	TYPE A / B	TYPE C / F	TYPE D / E	TYPE A1 / B1 / D1	TYPE E1
40	60"	12.0	12.0	12.0	12.0	12.0
	78"	12.0	12.0	12.0	12.0	12.0
	96"	12.0	12.0	12.0	12.0	10.9
	114"	12.0	12.0	12.0	10.5	9.1
	120"	12.0	12.0	12.0	9.9	8.7
	132"	12.0	12.0	12.0	9.0	7.9
	141"	12.0	12.0	12.0	8.5	7.4
50	60"	12.0	12.0	12.0	12.0	12.0
	78"	12.0	12.0	12.0	12.0	10.7
	96"	12.0	12.0	12.0	9.9	8.7
	114"	12.0	12.0	12.0	8.4	7.3
	120"	12.0	12.0	11.6	7.9	7.0
	132"	12.0	12.0	10.5	7.2	6.3
60	60"	12.0	12.0	12.0	12.0	12.0
	78"	12.0	12.0	12.0	12.0	12.0
	96"	12.0	12.0	12.0	12.0	11.9
	114"	12.0	12.0	12.0	10.4	10.0
	126"	12.0	12.0	12.0	9.4	9.1
70	60"	12.0	12.0	12.0	12.0	12.0
	78"	12.0	12.0	12.0	12.0	12.0
	96"	12.0	12.0	12.0	10.6	10.2
	114"	12.0	12.0	12.0	8.9	8.6
	118"	12.0	12.0	12.0	8.6	8.2
80	60"	12.0	12.0	12.0	12.0	12.0
	78"	12.0	12.0	12.0	11.4	11.0
	96"	12.0	12.0	12.0	9.3	8.9
	111"	12.0	12.0	12.0	8.0	7.7
90	60"	12.0	12.0	12.0	12.0	12.0
	78"	12.0	12.0	12.0	10.2	9.8
	96"	12.0	12.0	12.0	8.3	7.9
	105"	12.0	12.0	12.0	7.5	7.3
100	60"	12.0	12.0	12.0	11.9	11.4
	78"	12.0	12.0	12.0	9.1	8.8
	96"	12.0	12.0	11.8	7.4	7.1
	99"	12.0	12.0	11.5	7.2	6.9
120	48"	12.0	12.0	12.0	12.0	11.9
	60"	12.0	12.0	12.0	9.9	9.5
	78"	12.0	12.0	12.0	7.6	7.3
	91"	12.0	12.0	10.4	6.5	6.3
140	48"	12.0	12.0	12.0	10.6	10.2
	60"	12.0	12.0	12.0	8.5	8.2
	78"	12.0	12.0	10.4	6.5	6.3
	81"	12.0	12.0	10.0	6.3	6.0
150	48"	12.0	12.0	12.0	9.3	8.9
	60"	12.0	12.0	11.8	7.4	7.1
	70"	11.9	12.0	10.0	6.3	6.0

DESIGN LOAD VS SPAN AND ANCHOR SPACING CHART

MAX. DESIGN LOAD	SHUTTER SPAN	SECTION 5 (BOTTOM)				
		CONCRETE	CONCRETE	CONCRETE	CONCRETE BLOCK	CONCRETE BLOCK
		ANCHOR SPACING (in.)	ANCHOR SPACING (in.)	ANCHOR SPACING (in.)	ANCHOR SPACING (in.)	ANCHOR SPACING (in.)
(PSF)	(INCH)	TYPE A / B	TYPE C / F	TYPE D / E	TYPE A1 / B1 / D1	TYPE E1
40	60"	7.7	7.7	7.7	7.7	7.7
	78"	7.7	7.7	7.7	7.7	7.7
	96"	7.7	7.7	7.7	7.7	7.7
	114"	7.7	7.7	7.7	7.7	7.7
	120"	7.7	7.7	7.7	7.7	7.7
	132"	7.7	7.7	7.7	7.7	7.7
	141"	7.7	7.7	7.7	7.7	7.7
50	60"	7.7	7.7	7.7	7.7	7.7
	78"	7.7	7.7	7.7	7.7	7.7
	96"	7.7	7.7	7.7	7.7	7.7
	114"	7.7	7.7	7.7	7.7	7.7
	120"	7.7	7.7	7.7	7.7	7.5
	132"	7.7	7.7	7.7	7.7	6.8
60	60"	7.7	7.7	7.7	7.7	7.7
	78"	7.7	7.7	7.7	7.7	7.7
	96"	7.7	7.7	7.7	7.7	7.7
	114"	7.7	7.7	7.7	7.7	6.5
	126"	7.7	7.7	7.7	7.1	5.9
70	60"	7.7	7.7	7.7	7.7	7.7
	78"	7.7	7.7	7.7	7.7	7.7
	96"	7.7	7.7	7.7	7.7	6.7
	114"	7.7	7.7	7.7	6.7	5.6
	118"	7.7	7.7	7.7	6.4	5.4
80	60"	7.7	7.7	7.7	7.7	7.7
	78"	7.7	7.7	7.7	7.7	7.2
	96"	7.7	7.7	7.7	7.0	5.8
	111"	7.7	7.7	7.7	6.0	5.0
90	60"	7.7	7.7	7.7	7.7	7.7
	78"	7.7	7.7	7.7	7.6	6.4
	96"	7.7	7.7	7.7	6.2	5.2
	105"	7.7	7.7	7.7	5.7	4.7
100	60"	7.7	7.7	7.7	7.7	7.5
	78"	7.7	7.7	7.7	6.9	5.7
	96"	7.7	7.7	7.7	5.6	4.6
	99"	7.7	7.7	7.5	5.4	4.5
120	48"	7.7	7.7	7.7	7.7	7.7
	60"	7.7	7.7	7.7	7.4	6.2
	78"	7.7	7.7	7.7	5.7	4.8
	91"	7.7	7.7	6.8	4.9	4.1
140	48"	7.7	7.7	7.7	7.7	6.7
	60"	7.7	7.7	7.7	6.4	5.3
	78"	7.7	7.7	6.8	4.9	4.1
	81"	7.6	7.7	6.6	4.7	3.9
150	48"	7.7	7.7	7.7	7.0	5.8
	60"	7.7	7.7	7.7	5.6	4.6
	70"	7.5	7.7	6.5	4.7	3.9

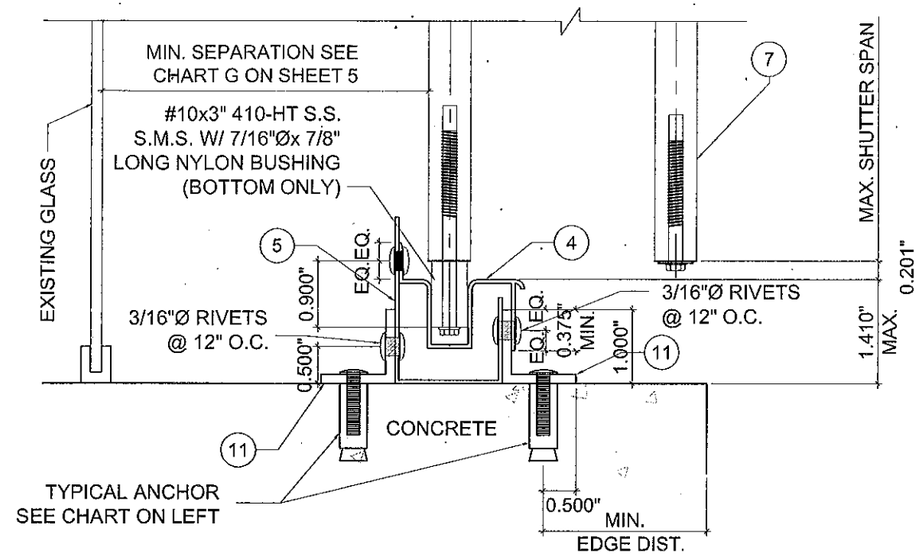

4 ADJUSTABLE FLOOR MOUNTING
STANDARD TRACK

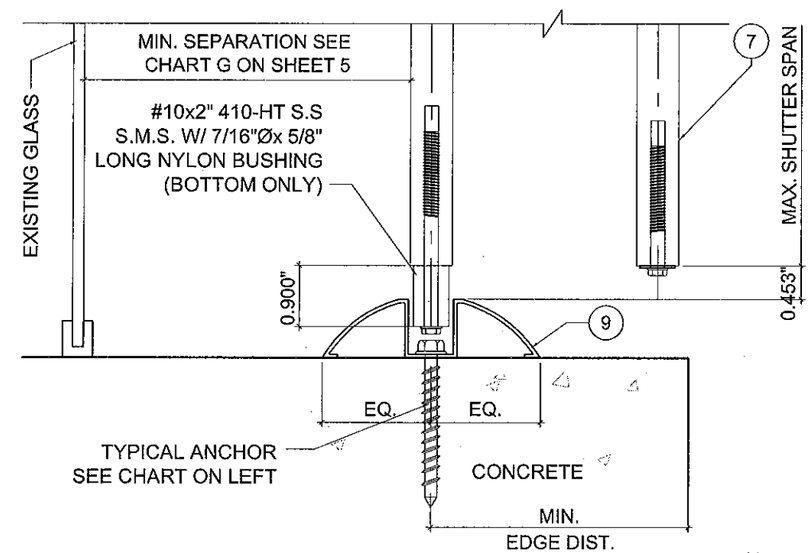

5 WALK OVER MOUNTING
STANDARD TRACK

Approved as complying with the Florida Building Code
Date 09/13/2012
NOA# 12-0514.14
Miami Dade Product Control
By Helen A. Miller
MIAMI DADE COUNTY

YIPING WANG LICENSE
YIPING WANG, P.E.
FLORIDA REGISTRATION No. 55983
PE #55983
C.A.N. 28677
STATE OF FLORIDA PROFESSIONAL ENGINEER

REVISIONS	
NO/DATE	DESCRIPTION

MCY ENGINEERING, INC.
GLAZING CONSULTANTS
8501 SW 124 AVE. STE. 205A
MIAMI, FL. 33183
P: 305.271.0117
F: 786.573.5063
www.MCYEngineering.com
MCY.Engineering@Att.net.

GSS - 1 GENESIS SHUTTER SYSTEM

NFC ALUMINUM INC.
9811 NW 80 AVE. BAY 7A / 7B
HIALEAH GARDENS, FL 33016
P: (305) 733 - 6235

DATE	05-11-12
SCALE	AS NOTED
DRAWN	M.M
PROJECT	MCY 12-096

DRAWING NO.
AD12-41

8 OF 15

MAY 11 2012

DESIGN LOAD VS SPAN AND ANCHOR SPACING CHART

MAX. DESIGN LOAD	SHUTTER SPAN	SECTION 8 (BOTTOM)					
		CONCRETE	CONCRETE	WOOD	CONCRETE BLOCK	CONCRETE BLOCK	ALUM. 6063-T6
		ANCHOR SPACING (in.)	ANCHOR SPACING (in.)	ANCHOR SPACING (in.)	ANCHOR SPACING (in.)	ANCHOR SPACING (in.)	ANCHOR SPACING (in.)
(PSF)	(INCH)	TYPE A / B / C / F	TYPE E	TYPE H / G	TYPE A1 / B1 / D1 / E1	TYPE C1 / F1	1/4" TEKS
40	60"	9.0	9.0	9.0	9.0	9.0	9.0
	78"	9.0	9.0	9.0	7.6	9.0	9.0
	96"	9.0	9.0	9.0	6.1	9.0	9.0
	114"	9.0	9.0	9.0	5.2	9.0	9.0
	120"	9.0	9.0	9.0	4.9	8.5	9.0
	132"	9.0	9.0	9.0	4.5	7.8	9.0
	141"	9.0	9.0	9.0	4.2	7.3	9.0
50	60"	9.0	9.0	9.0	7.9	9.0	9.0
	78"	9.0	9.0	9.0	6.0	9.0	9.0
	96"	9.0	9.0	9.0	4.9	8.5	9.0
	114"	9.0	9.0	9.0	4.1	7.2	9.0
	120"	9.0	8.7	9.0	3.9	6.8	9.0
	132"	9.0	7.9	9.0	3.6	6.2	8.8
60	60"	9.0	9.0	9.0	6.5	9.0	9.0
	78"	9.0	9.0	9.0	5.0	8.8	9.0
	96"	9.0	9.0	9.0	4.1	7.1	9.0
	114"	9.0	7.6	9.0	3.4	6.0	8.5
	126"	9.0	6.9	9.0	3.1	5.4	7.7
70	60"	9.0	9.0	9.0	5.6	9.0	9.0
	78"	9.0	9.0	9.0	4.3	7.5	9.0
	96"	9.0	7.8	9.0	3.5	6.1	8.7
	114"	8.9	6.6	9.0	-	5.1	7.3
	118"	8.5	6.3	9.0	-	4.9	7.0
80	60"	9.0	9.0	9.0	4.9	8.5	9.0
	78"	9.0	8.4	9.0	3.8	6.6	9.0
	96"	9.0	6.8	9.0	3.1	5.3	7.6
	111"	8.0	5.9	9.0	-	4.6	7.0
90	60"	9.0	9.0	9.0	4.4	7.6	9.0
	78"	9.0	7.4	9.0	3.4	5.8	8.3
	96"	8.2	6.1	9.0	-	4.7	6.8
	105"	7.5	5.5	8.9	-	4.3	6.2
100	60"	9.0	8.7	9.0	3.9	6.8	9.0
	78"	9.0	6.7	9.0	3.0	5.3	7.5
	96"	7.4	5.4	8.8	-	4.3	6.1
	99"	7.2	5.3	8.5	-	4.1	5.9
120	48"	9.0	9.0	9.0	4.1	7.1	9.0
	60"	9.0	7.3	9.0	3.3	5.7	8.1
	78"	7.6	5.6	9.0	-	4.4	6.2
	91"	6.5	4.8	7.7	-	3.8	5.3
140	48"	9.0	7.8	9.0	3.5	6.1	8.7
	60"	8.4	6.2	9.0	-	4.9	6.9
	78"	6.5	4.8	7.7	-	3.8	5.3
	81"	6.2	4.6	7.4	-	3.6	5.1
150	48"	9.0	6.8	9.0	3.1	5.3	7.6
	60"	7.4	5.4	8.8	-	4.3	6.1
	70"	6.2	4.6	7.4	-	3.6	5.1

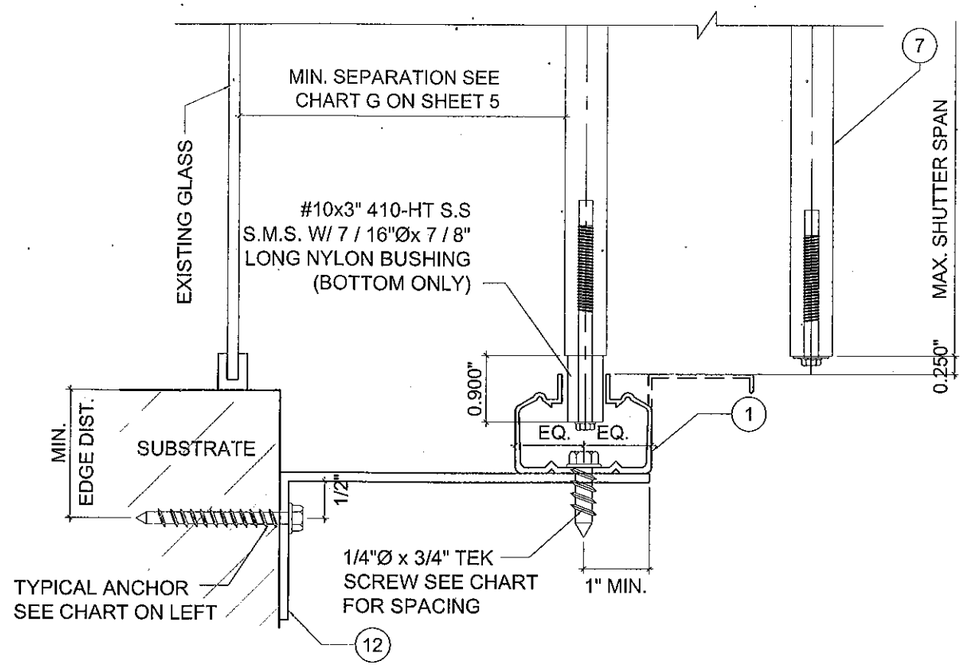

8 B.O. WALL MOUNTING INSTALLATION
STANDARD TRACK

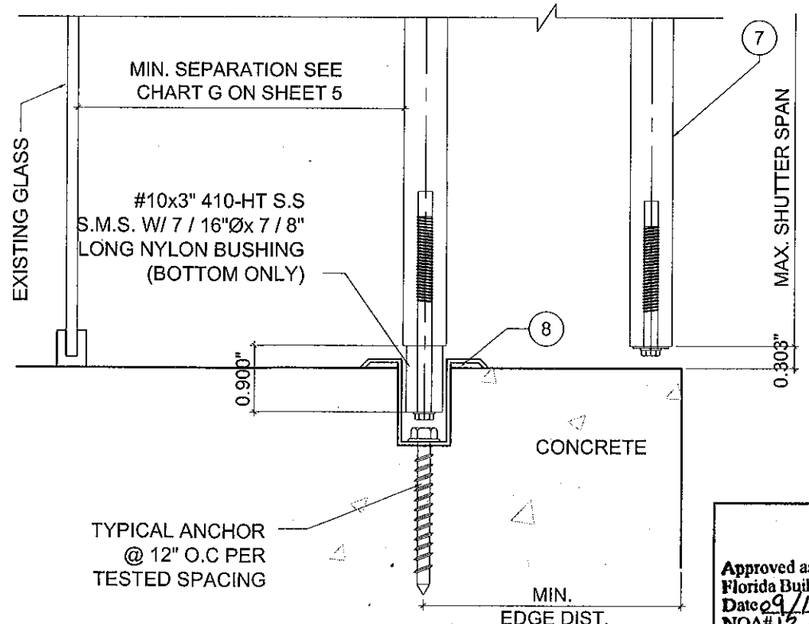

6 TRENCH MOUNTING INSTALLATION
STANDARD TRACK

Approved as complying with the Florida Building Code
Date 09/13/2012
NOA# 12-0514.14
Miami Dade Product Control
By
MIAMI DADE COUNTY

YIPING WANG LICENSE E-9988 STATE OF FLORIDA PROFESSIONAL ENGINEER
YIPING WANG P.E.
FLORIDA REGISTRATION
PE #55983
C.A.# 28677

REVISIONS	
NO. DATE	DESCRIPTION

MCY ENGINEERING, INC.
GLAZING CONSULTANTS
8501 SW 124 AVE. STE. 205A
MIAMI, FL. 33183
P: 305.271.0117
F: 786.573.5063
www.MCYEngineering.com
MCY.Engineering@Att.net

GSS - 1 GENESIS SHUTTER SYSTEM

NFC ALUMINUM INC.
9811 NW 80 AVE. BAY 7A / 7B
HIALEAH GARDENS, FL. 33016
P: (305) 733 - 6235

DATE	05-11-12
SCALE	AS NOTED
DRAWN	M.M
PROJECT	MCY 12-096

DRAWING NO.
AD12-41

MAY 11 2012

DESIGN LOAD VS SPAN AND ANCHOR SPACING CHART

MAX. DESIGN LOAD	SHUTTER SPAN	SECTION 7 & 8 (TOP)				
		CONCRETE	CONCRETE	WOOD	CONCRETE BLOCK	CONCRETE BLOCK
		ANCHOR SPACING (in.)	ANCHOR SPACING (in.)	ANCHOR SPACING (in.)	ANCHOR SPACING (in.)	ANCHOR SPACING (in.)
(PSF)	(INCH)	TYPE A / B / C / F	TYPE E	TYPE H / G	TYPE A1 / B1 / D1 / E1	TYPE C1 / F1
40	60"	9.0	9.0	9.0	9.0	9.0
	78"	9.0	9.0	9.0	8.6	9.0
	96"	9.0	9.0	9.0	7.0	9.0
	114"	9.0	9.0	9.0	5.9	9.0
	120"	9.0	9.0	9.0	5.6	9.0
	132"	9.0	9.0	9.0	5.1	8.8
	141"	9.0	9.0	9.0	4.7	8.2
50	60"	9.0	9.0	9.0	8.9	9.0
	78"	9.0	9.0	9.0	6.9	9.0
	96"	9.0	9.0	9.0	5.6	9.0
	114"	9.0	9.0	9.0	4.7	8.2
	120"	9.0	9.0	9.0	4.5	7.7
	132"	9.0	9.0	9.0	4.1	7.0
60	60"	9.0	9.0	9.0	7.4	9.0
	78"	9.0	9.0	9.0	5.7	9.0
	96"	9.0	9.0	9.0	4.6	8.1
	114"	9.0	8.7	9.0	3.9	6.8
	126"	9.0	7.8	9.0	3.5	6.1
70	60"	9.0	9.0	9.0	6.4	9.0
	78"	9.0	9.0	9.0	4.9	8.5
	96"	9.0	8.8	9.0	4.0	6.9
	114"	9.0	7.4	9.0	3.4	5.8
	118"	9.0	7.1	9.0	3.2	5.6
80	60"	9.0	9.0	9.0	5.6	9.0
	78"	9.0	9.0	9.0	4.3	7.5
	96"	9.0	7.7	9.0	3.5	6.1
	111"	9.0	6.7	9.0	3.0	5.2
90	60"	9.0	9.0	9.0	5.0	8.6
	78"	9.0	8.5	9.0	3.8	6.6
	96"	9.0	6.9	9.0	3.1	5.4
	105"	8.5	6.3	9.0	-	4.9
100	60"	9.0	9.0	9.0	4.5	7.7
	78"	9.0	7.6	9.0	3.4	6.0
	96"	8.4	6.2	9.0	-	4.8
	99"	8.1	6.0	9.0	-	4.7
120	48"	9.0	9.0	9.0	4.6	8.1
	60"	9.0	8.2	9.0	3.7	6.5
	78"	8.6	6.3	9.0	-	5.0
	91"	7.4	5.4	8.7	-	4.3
140	48"	9.0	8.8	9.0	4.0	6.9
	60"	9.0	7.1	9.0	3.2	5.5
	78"	7.4	5.4	8.7	-	4.3
	81"	7.1	5.2	8.4	-	4.1
150	48"	9.0	7.7	9.0	3.5	6.1
	60"	8.4	6.2	9.0	-	4.8
	70"	7.1	5.2	8.4	-	4.1

DESIGN LOAD VS SPAN AND ANCHOR SPACING CHART

MAX. DESIGN LOAD	SHUTTER SPAN	SECTION 7 (BOTTOM)					
		CONCRETE	CONCRETE	WOOD	CONCRETE BLOCK	CONCRETE BLOCK	ALUM. 6063-T6
		ANCHOR SPACING (in.)	ANCHOR SPACING (in.)	ANCHOR SPACING (in.)	ANCHOR SPACING (in.)	ANCHOR SPACING (in.)	ANCHOR SPACING (in.)
(PSF)	(INCH)	TYPE A / B / C / F	TYPE E	TYPE H / G	TYPE A1 / B1 / D1 / E1	TYPE C1 / F1	1/4" TEKS
40	60"	9.0	9.0	9.0	9.0	9.0	9.0
	78"	9.0	9.0	9.0	7.2	9.0	9.0
	96"	9.0	9.0	9.0	5.8	9.0	9.0
	114"	9.0	9.0	9.0	4.9	8.5	9.0
	120"	9.0	9.0	9.0	4.7	8.1	9.0
	132"	9.0	9.0	9.0	4.2	7.4	8.9
	141"	9.0	8.8	9.0	4.0	6.9	8.3
50	60"	9.0	9.0	9.0	7.5	9.0	9.0
	78"	9.0	9.0	9.0	5.8	9.0	9.0
	96"	9.0	9.0	9.0	4.7	8.1	9.0
	114"	9.0	8.7	9.0	3.9	6.8	8.2
	120"	9.0	8.3	9.0	3.7	6.5	7.8
	132"	9.0	7.5	9.0	3.4	5.9	7.1
60	60"	9.0	9.0	9.0	6.2	9.0	9.0
	78"	9.0	9.0	9.0	4.8	8.3	9.0
	96"	9.0	8.6	9.0	3.9	6.8	8.2
	114"	9.0	7.3	9.0	3.3	5.7	6.9
	126"	8.9	6.6	9.0	-	5.2	6.2
70	60"	9.0	9.0	9.0	5.3	9.0	9.0
	78"	9.0	9.0	9.0	4.1	7.1	8.6
	96"	9.0	7.4	9.0	3.3	5.8	7.0
	114"	8.5	6.2	9.0	-	4.9	5.9
	118"	8.1	6.0	9.0	-	4.7	5.6
80	60"	9.0	9.0	9.0	4.7	8.1	9.0
	78"	9.0	8.0	9.0	3.6	6.2	7.5
	96"	8.8	6.5	9.0	-	5.1	6.1
	111"	7.6	5.6	9.0	-	4.4	5.3
90	60"	9.0	9.0	9.0	4.2	7.2	8.7
	78"	9.0	7.1	9.0	3.2	5.6	6.7
	96"	7.8	5.8	9.0	-	4.5	5.4
	105"	7.1	5.3	8.5	-	4.1	5.0
100	60"	9.0	8.3	9.0	3.7	6.5	7.8
	78"	8.6	6.4	9.0	-	5.0	6.0
	96"	7.0	5.2	8.3	-	4.1	4.9
	99"	6.8	5.0	8.1	-	3.9	4.7
120	48"	9.0	8.6	9.0	3.9	6.8	8.2
	60"	9.0	6.9	9.0	3.1	5.4	6.5
	78"	7.2	5.3	8.5	-	4.2	5.0
	91"	6.2	4.6	7.3	-	3.6	4.3
140	48"	9.0	7.4	9.0	3.3	5.8	7.0
	60"	8.0	5.9	9.0	-	4.6	5.6
	78"	6.2	4.6	7.3	-	3.6	4.3
	81"	5.9	4.4	7.1	-	3.4	4.1
150	48"	8.8	6.5	9.0	-	5.1	6.1
	60"	7.0	5.2	8.3	-	4.1	4.9
	70"	5.9	4.4	7.0	-	3.4	4.1

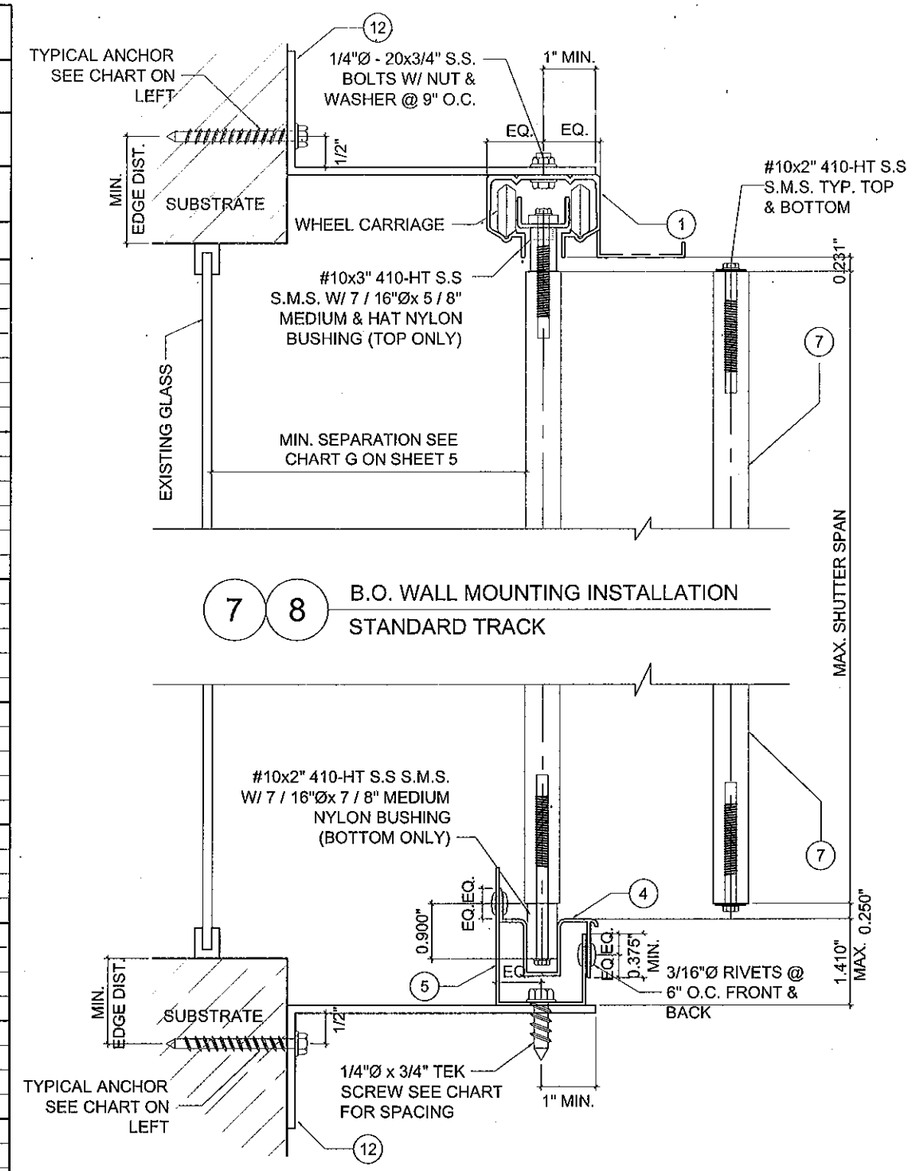

7 8 B.O. WALL MOUNTING INSTALLATION
STANDARD TRACK

7 B.O. WALL MOUNTING INSTALLATION
STANDARD TRACK

Approved as complying with the Florida Building Code
Date 09/13/2012
NOA# 12-0514.14
Miami Dade Product Control
By
MIAMI DADE COUNTY

YIPING WANG LICENSE
YIPING WANG, P.E.
FLORIDA REGISTRATION
PE #55983
C.A.N. 28677
STATE OF FLORIDA
PROFESSIONAL ENGINEER

REVISIONS		
NO.	DATE	DESCRIPTION

MCY ENGINEERING, INC.
GLAZING CONSULTANTS
8501 SW 124 AVE. STE. 205A
MIAMI, FL 33183
P: 305.271.0117
F: 786.573.5063
www.MCYEngineering.com
MCY.Engineering@Att.net

GSS - 1 GENESIS SHUTTER SYSTEM

NFC ALUMINUM INC.
9811 NW 80 AVE. BAY 7A / 7B
HIALEAH GARDENS, FL. 33016
P: (305) 733 - 6235

DATE	05-11-12
SCALE	AS NOTED
DRAWN	M.M
PROJECT	MCY 12-096

DRAWING NO.
AD12-41

MAY 11 2012

DESIGN LOAD VS SPAN AND ANCHOR SPACING CHART

MAX. DESIGN LOAD	SHUTTER SPAN	SECTION 9 (BOTTOM)				SECTION 9 (BOTTOM)	
		CONCRETE				BLOCK	
		ANCHOR SPACING (in.)				ANCHOR SPACING (in.)	
(PSF)	(INCH)	TYPE A	TYPE C	TYPE D	TYPE E / F	TYPE A1 / E1 / F1	TYPE C1 / D1
40	60"	6.5	6.5	6.5	6.5	6.1	6.5
	78"	6.5	6.5	6.5	6.5	4.7	6.4
	96"	6.5	6.5	6.5	6.3	3.8	5.2
	114"	6.5	6.5	6.5	5.3	3.2	4.4
	120"	6.5	6.5	6.5	5.1	3.0	4.2
	132"	6.0	6.4	6.5	4.6	-	3.8
	141"	5.7	6.0	6.5	4.3	-	3.5
50	60"	6.5	6.5	6.5	6.5	4.9	6.5
	78"	6.5	6.5	6.5	6.2	3.7	5.1
	96"	6.5	6.5	6.5	5.1	3.0	4.2
	114"	5.6	5.9	6.5	4.3	-	3.5
	120"	5.3	5.6	6.5	4.0	-	3.3
	132"	4.8	5.1	5.9	3.7	-	3.0
60	60"	6.5	6.5	6.5	6.5	4.1	5.5
	78"	6.5	6.5	6.5	5.2	3.1	4.3
	96"	5.5	5.8	6.5	4.2	-	3.5
	114"	4.7	4.9	5.7	3.5	-	-
	126"	4.2	4.5	5.2	3.2	-	-
70	60"	6.5	6.5	6.5	5.8	3.5	4.8
	78"	5.8	6.2	6.5	4.4	-	3.7
	96"	4.8	5.0	5.8	3.6	-	-
	114"	4.0	4.2	4.9	3.0	-	-
	118"	3.8	4.0	4.7	-	-	-
80	60"	6.5	6.5	6.5	5.1	3.0	4.2
	78"	5.1	5.4	6.3	3.9	-	3.2
	96"	4.2	4.4	5.1	3.2	-	-
	111"	3.6	3.8	4.4	-	-	-
90	60"	5.9	6.2	6.5	4.5	-	3.7
	78"	4.5	4.8	5.6	3.5	-	-
	96"	3.7	3.9	4.5	-	-	-
	105"	3.4	3.6	4.1	-	-	-
100	60"	5.3	5.6	6.5	4.0	-	3.3
	78"	4.1	4.3	5.0	3.1	-	-
	96"	3.3	3.5	4.1	-	-	-
	99"	3.2	3.4	3.9	-	-	-
120	48"	5.5	5.8	6.5	4.2	-	3.5
	60"	4.4	4.7	5.4	3.4	-	-
	78"	3.4	3.6	4.2	-	-	-
	91"	-	3.1	3.6	-	-	-
140	48"	4.8	5.0	5.8	3.6	-	-
	60"	3.8	4.0	4.6	-	-	-
	78"	-	3.1	3.6	-	-	-
	81"	-	-	3.4	-	-	-
150	48"	4.2	4.4	5.1	3.2	-	-
	60"	3.3	3.5	4.1	-	-	-
	70"	-	-	3.4	-	-	-

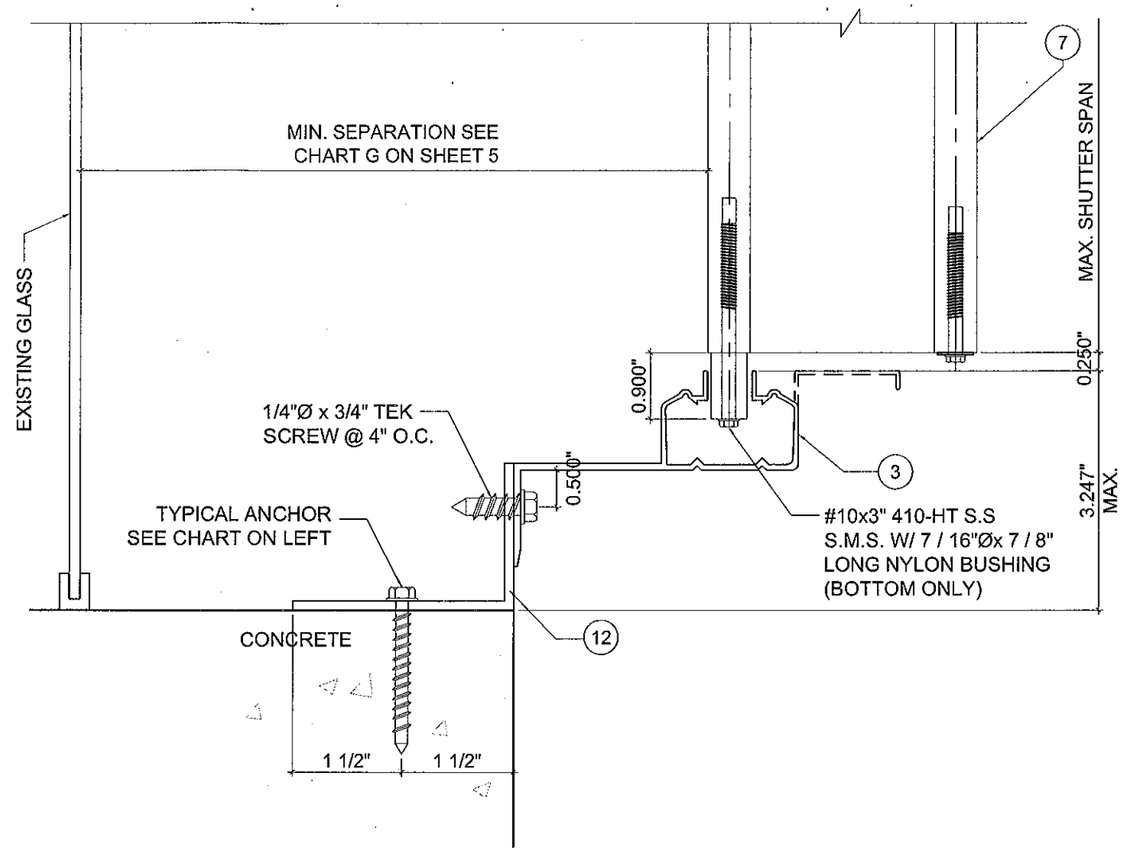

9 2" B.O. WALL MOUNTING INSTALLATION
STANDARD TRACK

Approved as complying with the Florida Building Code
Date 09/13/2012
NOA# 12-0514.14
Miami Dade Product Control
By
MIAMI DADE COUNTY

YIPING WANG
LICENSE
YIPING WANG, P.E.
FLORIDA REGISTRATION
PE #55983
C.A.N. 28677
STATE OF FLORIDA
PROFESSIONAL ENGINEER

MAY 11 2012

REVISIONS		
NO	DATE	DESCRIPTION

MCY ENGINEERING, INC.
GLAZING CONSULTANTS
8501 SW 124 AVE. STE. 205A
MIAMI, FL. 33183
P: 305.271.0117
F: 786.573.5063
www.MCYEngineering.com
MCY.Engineering@Att.net

GSS - 1 GENESIS SHUTTER SYSTEM

NFC ALUMINUM INC.
9811 NW 80 AVE. BAY 7A / 7B
HIALEAH GARDENS, FL. 33016
P: (305) 733 - 6235

DATE	05-11-12
SCALE	AS NOTED
DRAWN	M.M
PROJECT	MCY 12-096

DRAWING NO.
AD12-41

DESIGN LOAD VS SPAN AND ANCHOR SPACING CHART

MAX. DESIGN LOAD	SHUTTER SPAN	SECTION 10 (TOP) WOOD STRUCTURE 5/16" ULTRACON	SECTION 10 (TOP) ALUMINUM PLATE 1/4" TEKS
(PSF)	(INCH)	ANCHOR SPACING (in.)	ANCHOR SPACING (in.)
40	60"	16.0	12.0
	78"	16.0	12.0
	96"	16.0	12.0
	114"	16.0	12.0
	120"	16.0	12.0
	132"	16.0	12.0
	141"	16.0	12.0
50	60"	16.0	12.0
	78"	16.0	12.0
	96"	16.0	12.0
	114"	16.0	12.0
	120"	16.0	12.0
	132"	16.0	12.0
60	60"	16.0	12.0
	78"	16.0	12.0
	96"	16.0	12.0
	114"	16.0	11.7
	126"	16.0	10.6
70	60"	16.0	12.0
	78"	16.0	12.0
	96"	16.0	11.9
	114"	16.0	10.1
	118"	16.0	9.7
80	60"	16.0	12.0
	78"	16.0	12.0
	96"	16.0	10.5
	111"	16.0	9.1
90	60"	16.0	12.0
	78"	16.0	11.4
	96"	16.0	9.4
	105"	16.0	8.6
100	60"	16.0	12.0
	78"	16.0	10.3
	96"	16.0	8.5
	99"	15.0	8.2
120	48"	16.0	12.0
	60"	16.0	11.1
	78"	16.0	8.7
	91"	16.0	7.5
140	48"	16.0	11.9
	60"	16.0	9.6
	78"	16.0	7.5
	81"	16.0	7.3
150	48"	16.0	10.5
	60"	16.0	8.5
	70"	16.0	7.2

DESIGN LOAD VS SPAN AND ANCHOR SPACING CHART

MAX. DESIGN LOAD	SHUTTER SPAN	SECTION 10 (BOTTOM) CONCRETE TYPE A / B / C / F	CONCRETE TYPE E	WOOD STRUCTURE TYPE H / G	CONCRETE BLOCK TYPE A1 / B1 / D1 / E1	CONCRETE BLOCK TYPE C1 / F1	ALUM. TUBE 6063-T6 1/4" x 3/4" SELF DRILL SCREW
(PSF)	(INCH)	ANCHOR SPACING (in.)	ANCHOR SPACING (in.)	ANCHOR SPACING (in.)	ANCHOR SPACING (in.)	ANCHOR SPACING (in.)	ANCHOR SPACING (in.)
40	60"	9.0	9.0	9.0	9.0	9.0	9.0
	78"	9.0	9.0	9.0	6.9	9.0	9.0
	96"	9.0	9.0	9.0	5.6	9.0	7.6
	114"	9.0	9.0	9.0	4.7	8.2	6.4
	120"	9.0	9.0	9.0	4.5	7.8	6.1
	132"	9.0	9.0	9.0	4.1	7.1	5.5
	141"	9.0	8.5	9.0	3.8	6.7	5.2
50	60"	9.0	9.0	9.0	7.2	9.0	9.0
	78"	9.0	9.0	9.0	5.5	9.0	7.5
	96"	9.0	9.0	9.0	4.5	7.8	6.1
	114"	9.0	8.4	9.0	3.8	6.6	5.1
	120"	9.0	8.0	9.0	3.6	6.3	4.8
	132"	9.0	7.3	9.0	3.3	5.7	4.4
60	60"	9.0	9.0	9.0	6.0	9.0	8.1
	78"	9.0	9.0	9.0	4.6	8.0	6.2
	96"	9.0	8.3	9.0	3.8	6.5	5.0
	114"	9.0	7.0	9.0	3.2	5.5	4.2
	126"	8.6	6.3	9.0	-	5.0	3.8
70	60"	9.0	9.0	9.0	5.2	8.9	6.8
	78"	9.0	8.8	9.0	4.0	6.9	5.3
	96"	9.0	7.1	9.0	3.2	5.6	4.3
	114"	8.1	6.0	9.0	-	4.7	3.6
	118"	7.8	5.8	9.0	-	4.5	3.5
80	60"	9.0	9.0	9.0	4.5	7.8	6.1
	78"	9.0	7.7	9.0	3.5	6.0	4.7
	96"	8.5	6.2	9.0	-	4.9	3.8
	111"	7.3	5.4	8.7	-	4.2	3.3
90	60"	9.0	8.9	9.0	4.0	7.0	5.4
	78"	9.0	6.8	9.0	3.1	5.4	4.1
	96"	7.5	5.6	8.9	-	4.3	3.4
	105"	6.9	5.1	8.2	-	4.0	3.1
100	60"	9.0	8.0	9.0	3.6	6.3	4.8
	78"	8.3	6.1	9.0	-	4.8	3.7
	96"	6.8	5.0	8.0	-	3.9	3.0
	99"	6.6	4.8	7.8	-	3.8	-
120	48"	9.0	8.3	9.0	3.8	6.5	5.0
	60"	9.0	6.7	9.0	3.0	5.2	4.0
	78"	6.9	5.1	8.2	-	4.0	3.1
	91"	6.0	4.4	7.1	-	3.4	-
140	48"	9.0	7.1	9.0	3.2	5.6	4.3
	60"	7.7	5.7	9.0	-	4.5	3.5
	78"	6.0	4.4	7.1	-	3.4	-
	81"	5.7	4.2	6.8	-	3.3	-
150	48"	8.5	6.2	9.0	-	4.9	3.8
	60"	6.8	5.0	8.0	-	3.9	3.0
	70"	5.7	4.2	6.8	-	3.3	-

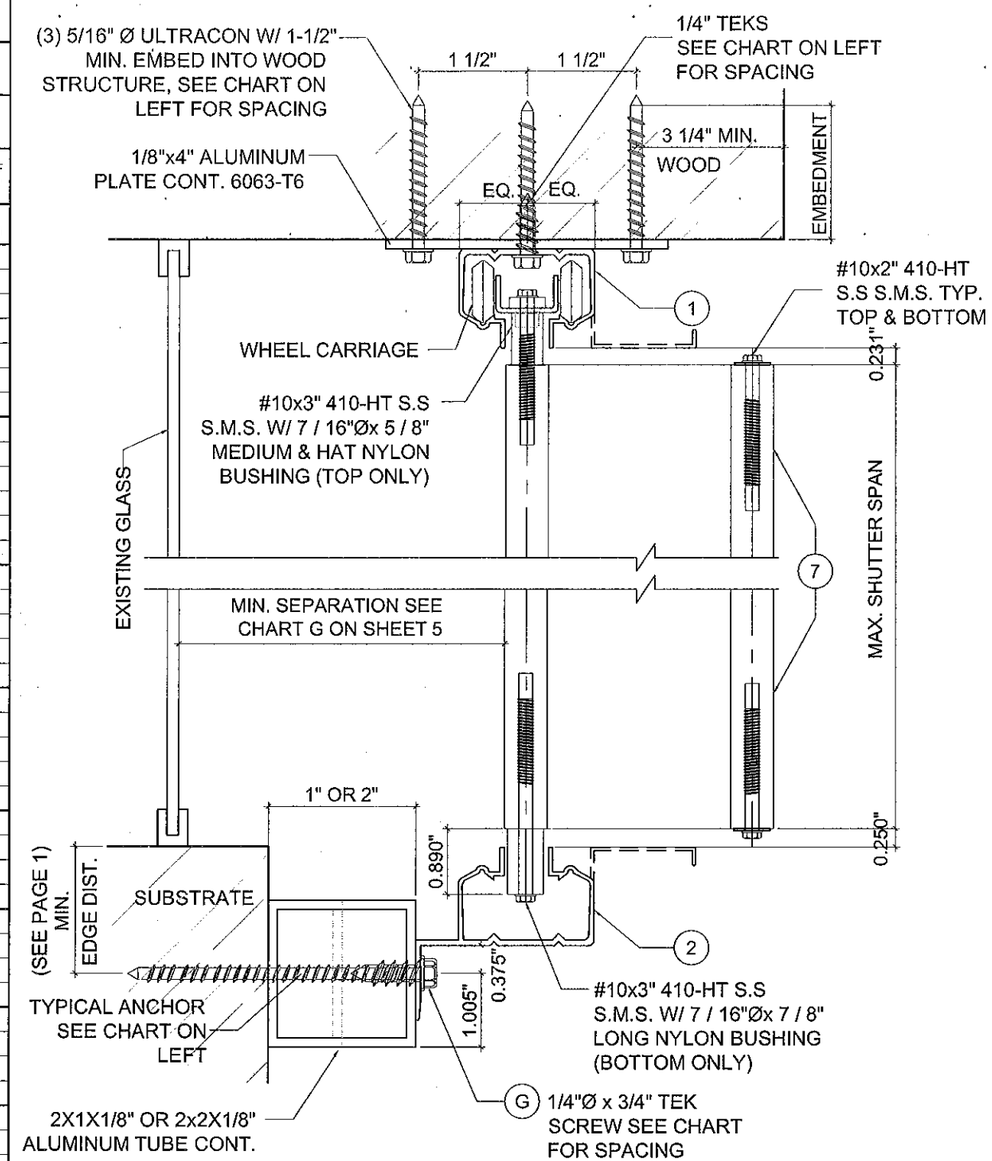

10 CEILING TO WALL MOUNTING INSTALLATION
STANDARD TRACK

Approved as complying with the Florida Building Code
Date 09/13/2012
NOA# 12-0514.14
Miami Dade Product Control
By

MIAMI DADE COUNTY

YIPING WANG
LICENSED
YIPING WANG, P.E.
FLORIDA REGISTRATION
No. 55082
PE #33983
C.A.N. 28677
STATE OF FLORIDA
PROFESSIONAL ENGINEER

REVISIONS		
NO.	DATE	DESCRIPTION

MCY ENGINEERING, INC.
GLAZING CONSULTANTS
8501 SW 124 AVE. STE. 205A
MIAMI, FL 33183
P: 305.271.0117
F: 786.573.5063
www.MCYEngineering.com
MCY.Engineering@Att.net

GSS - 1 GENESIS SHUTTER SYSTEM

NFC ALUMINUM INC.
9811 NW 80 AVE. BAY 7A / 7B
HIALEAH GARDENS, FL 33016
P: (305) 733 - 6235

DATE	05-11-12
SCALE	AS NOTED
DRAWN	M.M
PROJECT	MCY 12-096

DRAWING NO.
AD12-41

MAY 11 2012

DESIGN LOAD VS SPAN AND ANCHOR SPACING CHART

MAX. DESIGN LOAD	SHUTTER SPAN	SECTION 11 (TOP)					
		CONCRETE	CONCRETE	CONCRETE	WOOD	CONCRETE BLOCK	CONCRETE BLOCK
		TYPE A / B	TYPE C / F	TYPE D / E	TYPE H / G	TYPE A1 / B1 / D1	TYPE E1
(PSF)	(INCH)	ANCHOR SPACING (in.)	ANCHOR SPACING (in.)	ANCHOR SPACING (in.)	ANCHOR SPACING (in.)	ANCHOR SPACING (in.)	ANCHOR SPACING (in.)
40	60"	12.0	12.0	12.0	12.0	12.0	12.0
	78"	12.0	12.0	12.0	12.0	11.7	11.2
	96"	12.0	12.0	12.0	11.3	9.5	9.1
	114"	12.0	12.0	12.0	9.6	8.0	7.6
	120"	12.0	12.0	12.0	9.1	7.6	7.3
	132"	12.0	12.0	10.9	8.2	6.9	6.6
	141"	12.0	12.0	10.2	7.7	6.5	6.2
50	60"	12.0	12.0	12.0	12.0	12.0	11.7
	78"	12.0	12.0	12.0	11.2	9.5	9.0
	96"	12.0	12.0	12.0	9.1	7.7	7.3
	114"	12.0	12.0	10.2	7.7	6.5	6.2
	120"	11.6	12.0	9.7	7.3	6.2	5.9
	132"	10.5	12.0	8.8	6.6	5.6	5.3
60	60"	12.0	12.0	12.0	12.0	10.4	9.9
	78"	12.0	12.0	12.0	9.4	8.0	7.6
	96"	12.0	12.0	10.2	7.6	6.5	6.2
	114"	10.2	12.0	8.6	6.4	5.5	5.2
	126"	9.3	12.0	7.8	5.8	5.0	4.7
70	60"	12.0	12.0	12.0	10.5	9.0	8.5
	78"	12.0	12.0	10.8	8.1	6.9	6.5
	96"	10.5	12.0	8.8	6.5	5.6	5.3
	114"	8.8	12.0	7.4	5.5	4.7	4.5
	118"	8.4	11.8	7.1	5.3	4.5	4.3
80	60"	12.0	12.0	12.0	9.2	7.9	7.5
	78"	11.3	12.0	9.5	7.1	6.1	5.7
	96"	9.2	12.0	7.7	5.7	4.9	4.7
	111"	7.9	11.1	6.7	5.0	4.3	4.0
90	60"	12.0	12.0	11.0	8.2	7.1	6.6
	78"	10.1	12.0	8.5	6.3	5.4	5.1
	96"	8.2	11.4	6.9	5.1	4.4	4.2
	105"	7.5	10.5	6.3	4.7	4.0	3.8
100	60"	11.8	12.0	9.9	7.4	6.4	6.0
	78"	9.1	12.0	7.6	5.7	4.9	4.6
	96"	7.4	10.3	6.2	4.6	4.0	3.7
	99"	7.2	10.0	6.0	4.5	3.9	3.6
120	48"	12.0	12.0	10.4	7.7	6.7	6.3
	60"	9.9	12.0	8.3	6.1	5.3	5.0
	78"	7.6	10.6	6.4	4.7	4.1	3.9
	91"	6.5	9.1	5.5	4.1	3.5	3.3
140	48"	10.6	12.0	8.9	6.6	5.7	5.4
	60"	8.5	11.9	7.1	5.3	4.6	4.3
	78"	6.5	9.1	5.5	4.1	3.5	3.3
	81"	6.3	8.8	5.3	3.9	3.4	3.2
160	48"	9.3	12.0	7.8	5.8	5.0	4.7
	60"	7.4	10.4	6.3	4.6	4.0	3.8
	70"	6.3	8.8	5.3	3.9	3.4	3.2
180	48"	8.3	11.6	7.0	5.1	4.5	4.2
	63"	6.3	8.8	5.3	3.9	3.4	3.2
200	48"	7.4	10.4	6.3	4.6	4.0	3.8
	57"	6.3	8.8	5.3	3.9	3.4	3.2

DESIGN LOAD VS SPAN AND ANCHOR SPACING CHART

MAX. DESIGN LOAD	SHUTTER SPAN	SECTION 11 (BOTTOM)				
		CONCRETE	CONCRETE	CONCRETE	CONCRETE BLOCK	CONCRETE BLOCK
		TYPE A / B	TYPE C / F	TYPE D / E	TYPE A1 / B1 / D1	TYPE E1
(PSF)	(INCH)	ANCHOR SPACING (in.)	ANCHOR SPACING (in.)	ANCHOR SPACING (in.)	ANCHOR SPACING (in.)	ANCHOR SPACING (in.)
40	60"	12.0	12.0	12.0	12.0	12.0
	78"	12.0	12.0	12.0	12.0	12.0
	96"	12.0	12.0	12.0	12.0	11.5
	114"	12.0	12.0	12.0	11.4	9.7
	120"	12.0	12.0	12.0	10.8	9.2
	132"	12.0	12.0	12.0	9.9	8.3
	141"	12.0	12.0	12.0	9.2	7.8
50	60"	12.0	12.0	12.0	12.0	12.0
	78"	12.0	12.0	12.0	12.0	11.3
	96"	12.0	12.0	12.0	10.8	9.2
	114"	12.0	12.0	12.0	9.1	7.7
	120"	12.0	12.0	12.0	8.7	7.3
	132"	12.0	12.0	11.1	7.9	6.7
60	60"	12.0	12.0	12.0	12.0	12.0
	78"	12.0	12.0	12.0	12.0	12.0
	96"	12.0	12.0	12.0	12.0	12.0
	114"	12.0	12.0	12.0	11.9	11.0
	126"	12.0	12.0	12.0	10.8	9.9
70	60"	12.0	12.0	12.0	12.0	12.0
	78"	12.0	12.0	12.0	12.0	12.0
	96"	12.0	12.0	12.0	12.0	11.2
	114"	12.0	12.0	12.0	10.2	9.4
	118"	12.0	12.0	12.0	9.8	9.0
80	60"	12.0	12.0	12.0	12.0	12.0
	78"	12.0	12.0	12.0	12.0	12.0
	96"	12.0	12.0	12.0	10.6	9.8
	111"	12.0	12.0	12.0	9.2	8.5
90	60"	12.0	12.0	12.0	12.0	12.0
	78"	12.0	12.0	12.0	11.6	10.7
	96"	12.0	12.0	12.0	9.4	8.7
	105"	12.0	12.0	12.0	8.6	8.0
100	60"	12.0	12.0	12.0	12.0	12.0
	78"	12.0	12.0	12.0	10.4	9.6
	96"	12.0	12.0	12.0	8.5	7.8
	99"	12.0	12.0	12.0	8.2	7.6
120	48"	12.0	12.0	12.0	12.0	12.0
	60"	12.0	12.0	12.0	11.3	10.4
	78"	12.0	12.0	12.0	8.7	8.0
	91"	12.0	12.0	11.4	7.5	6.9
140	48"	12.0	12.0	12.0	12.0	11.2
	60"	12.0	12.0	12.0	9.7	8.9
	78"	12.0	12.0	11.4	7.5	6.9
	81"	12.0	12.0	11.0	7.2	6.6
160	48"	12.0	12.0	12.0	10.6	9.8
	60"	12.0	12.0	12.0	8.5	7.8
	70"	12.0	12.0	11.0	7.2	6.6
180	48"	12.0	12.0	12.0	9.4	8.7
	63"	12.0	12.0	11.0	7.2	6.6
200	48"	12.0	12.0	12.0	8.5	7.8
	57"	12.0	12.0	10.9	7.1	6.6

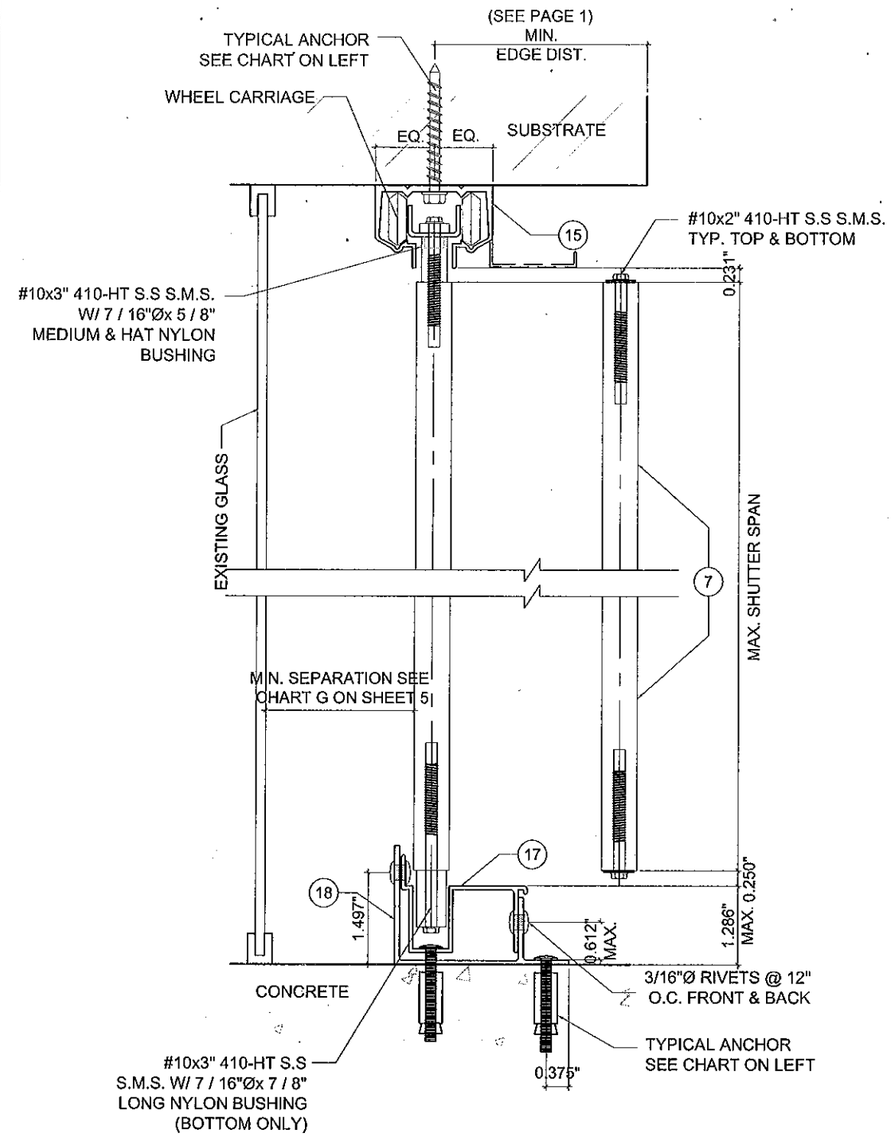

11 FLOOR TO CEILING MOUNTING INSTALLATION
HEAVY DUTY TRACK

Approved as complying with the
Florida Building Code
Date 09/13/2012
NOA# 12-0514.14
Miami Dade Product Control
By
MIAMI DADE COUNTY

YIPING WANG
LICENSE
YIPING WANG, P.E.
FLORIDA REGISTRATION
PE #55983
C.A.N. 28677
STATE OF FLORIDA
PROFESSIONAL ENGINEER

MAY 11 2012

REVISIONS		
NO	DATE	DESCRIPTION

MCY ENGINEERING, INC.
GLAZING CONSULTANTS
8501 SW 124 AVE. STE. 205A
MIAMI, FL 33183
P: 305.271.0117
F: 786.573.5063
www.MCYEngineering.com
MCY.Engineering@att.net

GSS - 1 GENESIS SHUTTER SYSTEM

NFC ALUMINUM INC.
9811 NW 80 AVE. BAY 7A / 7B
HIALEAH GARDENS, FL. 33016
P: (305) 733 - 6235

DATE	05-11-12
SCALE	AS NOTED
DRAWN	M.M
PROJECT	MCY 12-096

DRAWING NO.
AD12-41

DESIGN LOAD VS SPAN AND ANCHOR SPACING CHART

MAX. DESIGN LOAD	SHUTTER SPAN	SECTION 12 (TOP)				
		CONCRETE	CONCRETE	WOOD	CONCRETE BLOCK	CONCRETE BLOCK
		ANCHOR SPACING (in.)	ANCHOR SPACING (in.)	ANCHOR SPACING (in.)	ANCHOR SPACING (in.)	ANCHOR SPACING (in.)
(PSF)	(INCH)	TYPE A / B / C / F	TYPE E	TYPE H / G	TYPE A1 / B1 / D1 / E1	TYPE C1 / F1
40	60"	12.0	12.0	12.0	10.5	12.0
	78"	12.0	12.0	12.0	8.1	12.0
	96"	12.0	12.0	12.0	6.6	11.5
	114"	12.0	12.0	12.0	5.6	9.6
	120"	12.0	11.7	12.0	5.3	9.2
	132"	12.0	10.6	12.0	4.8	8.3
	141"	12.0	10.0	12.0	4.5	7.8
50	60"	12.0	12.0	12.0	8.4	12.0
	78"	12.0	12.0	12.0	6.5	11.3
	96"	12.0	11.7	12.0	5.3	9.2
	114"	12.0	9.8	12.0	4.4	7.7
	120"	12.0	9.4	12.0	4.2	7.3
	132"	11.5	8.5	12.0	3.8	6.7
60	60"	12.0	12.0	12.0	7.0	12.0
	78"	12.0	12.0	12.0	5.4	9.4
	96"	12.0	9.7	12.0	4.4	7.6
	114"	11.1	8.2	12.0	3.7	6.4
	126"	10.1	7.4	11.9	3.3	5.8
70	60"	12.0	12.0	12.0	6.0	10.5
	78"	12.0	10.3	12.0	4.6	8.1
	96"	11.3	8.4	12.0	3.8	6.5
	114"	9.5	7.0	11.3	3.2	5.5
	118"	9.1	6.7	10.8	3.0	5.3
80	60"	12.0	11.7	12.0	5.3	9.2
	78"	12.0	9.0	12.0	4.1	7.0
	96"	9.9	7.3	11.8	3.3	5.7
	111"	8.6	6.3	10.2	-	5.0
90	60"	12.0	10.4	12.0	4.7	8.1
	78"	10.8	8.0	12.0	3.6	6.3
	96"	8.8	6.5	10.4	-	5.1
	105"	8.1	5.9	9.6	-	4.7
100	60"	12.0	9.4	12.0	4.2	7.3
	78"	9.8	7.2	11.6	3.2	5.6
	96"	7.9	5.8	9.4	-	4.6
	99"	7.7	5.7	9.1	-	4.4
120	48"	12.0	9.7	12.0	4.4	7.6
	60"	10.6	7.8	12.0	3.5	6.1
	78"	8.1	6.0	9.6	-	4.7
	91"	7.0	5.1	8.3	-	4.0
140	48"	11.3	8.4	12.0	3.8	6.5
	60"	9.1	6.7	10.7	3.0	5.2
	78"	7.0	5.1	8.3	-	4.0
	81"	6.7	4.9	8.0	-	3.9
160	48"	9.9	7.3	11.8	3.3	5.7
	60"	7.9	5.8	9.4	-	4.6
	70"	6.7	4.9	7.9	-	3.9
180	48"	8.8	6.5	10.4	-	5.1
	63"	6.7	4.9	8.0	-	3.9
200	48"	7.9	5.8	9.4	-	4.6
	57"	6.7	4.9	7.9	-	3.9

DESIGN LOAD VS SPAN AND ANCHOR SPACING CHART

MAX. DESIGN LOAD	SHUTTER SPAN	SECTION 12 (BOTTOM)				
		CONCRETE	CONCRETE	WOOD	CONCRETE BLOCK	CONCRETE BLOCK
		ANCHOR SPACING (in.)	ANCHOR SPACING (in.)	ANCHOR SPACING (in.)	ANCHOR SPACING (in.)	ANCHOR SPACING (in.)
(PSF)	(INCH)	TYPE A / B / C / F	TYPE E	TYPE H / G	TYPE A1 / B1 / D1 / E1	TYPE C1 / F1
40	60"	12.0	12.0	12.0	8.7	12.0
	78"	12.0	12.0	12.0	6.7	11.6
	96"	12.0	12.0	12.0	5.4	9.4
	114"	12.0	10.1	12.0	4.6	8.0
	120"	12.0	9.6	12.0	4.3	7.6
	132"	11.9	8.8	12.0	4.0	6.9
	141"	11.1	8.2	12.0	3.7	6.4
50	60"	12.0	12.0	12.0	7.0	12.0
	78"	12.0	11.9	12.0	5.4	9.3
	96"	12.0	9.6	12.0	4.3	7.6
	114"	11.0	8.1	12.0	3.7	6.4
	120"	10.5	7.7	12.0	3.5	6.0
	132"	9.5	7.0	11.3	3.2	5.5
60	60"	12.0	12.0	12.0	5.8	10.1
	78"	12.0	9.9	12.0	4.5	7.7
	96"	10.9	8.0	12.0	3.6	6.3
	114"	9.2	6.8	10.9	3.1	5.3
	126"	8.3	6.1	9.8	-	4.8
70	60"	12.0	11.0	12.0	5.0	8.6
	78"	11.5	8.5	12.0	3.8	6.6
	96"	9.3	6.9	11.1	3.1	5.4
	114"	7.9	5.8	9.3	-	4.5
	118"	7.5	5.6	8.9	-	4.4
80	60"	12.0	9.6	12.0	4.3	7.6
	78"	10.1	7.4	11.9	3.3	5.8
	96"	8.2	6.0	9.7	-	4.7
	111"	7.1	5.2	8.4	-	4.1
90	60"	11.6	8.6	12.0	3.9	6.7
	78"	8.9	6.6	10.6	-	5.2
	96"	7.3	5.4	8.6	-	4.2
	105"	6.6	4.9	7.9	-	3.8
100	60"	10.5	7.7	12.0	3.5	6.0
	78"	8.0	5.9	9.5	-	4.6
	96"	6.5	4.8	7.8	-	3.8
	99"	6.3	4.7	7.5	-	3.7
120	48"	10.9	8.0	12.0	3.6	6.3
	60"	8.7	6.4	10.3	-	5.0
	78"	6.7	4.9	8.0	-	3.9
	91"	5.7	4.2	6.8	-	3.3
140	48"	9.3	6.9	11.1	3.1	5.4
	60"	7.5	5.5	8.9	-	4.3
	78"	5.7	4.2	6.8	-	3.3
	81"	5.5	4.1	6.6	-	3.2
160	48"	8.2	6.0	9.7	-	4.7
	60"	6.5	4.8	7.8	-	3.8
	70"	5.5	4.1	6.6	-	3.2
180	48"	7.3	5.4	8.6	-	4.2
	63"	5.5	4.1	6.6	-	3.2
200	48"	6.5	4.8	7.8	-	3.8
	57"	5.5	4.1	6.5	-	3.2

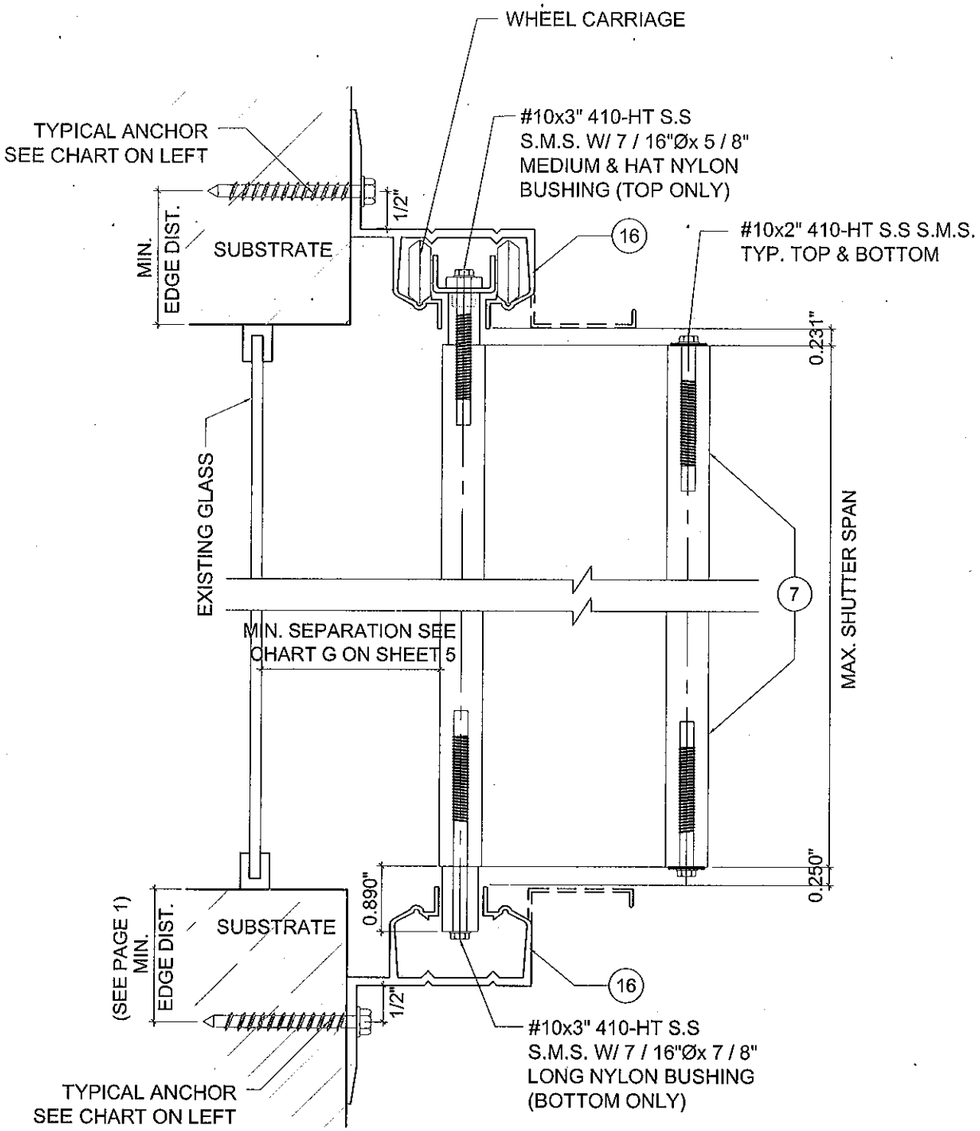

12 WALL MOUNTING INSTALLATION
HEAVY DUTY TRACK

Approved as complying with the Florida Building Code
Date 09/13/2012
NOA# 12-0514.14
Miami Dade Product Control
By
MIAMI DADE COUNTY

YIPING WANG LICENSE
YIPING WANG, P.E.
FLORIDA REGISTRATION
PE #55983
C.A.N. 28677
STATE OF FLORIDA PROFESSIONAL ENGINEER
MAY 11 2012

REVISIONS

NO	DATE	DESCRIPTION

MCY ENGINEERING, INC.
GLAZING CONSULTANTS
8501 SW 124 AVE. STE. 205A
MIAMI, FL. 33183
P: 305.271.0117
F: 786.573.5063
www.MCYEngineering.com
MCY.Engineering@Att.net

GSS - 1 GENESIS SHUTTER SYSTEM

NFC ALUMINUM INC.
9811 NW 80 AVE. BAY 7A / 7B
HIALEAH GARDENS, FL. 33016
P: (305) 733 - 6235

DATE	05-11-12
SCALE	AS NOTED
DRAWN	M.M
PROJECT	MCY 12-096

DRAWING NO.
AD12-41

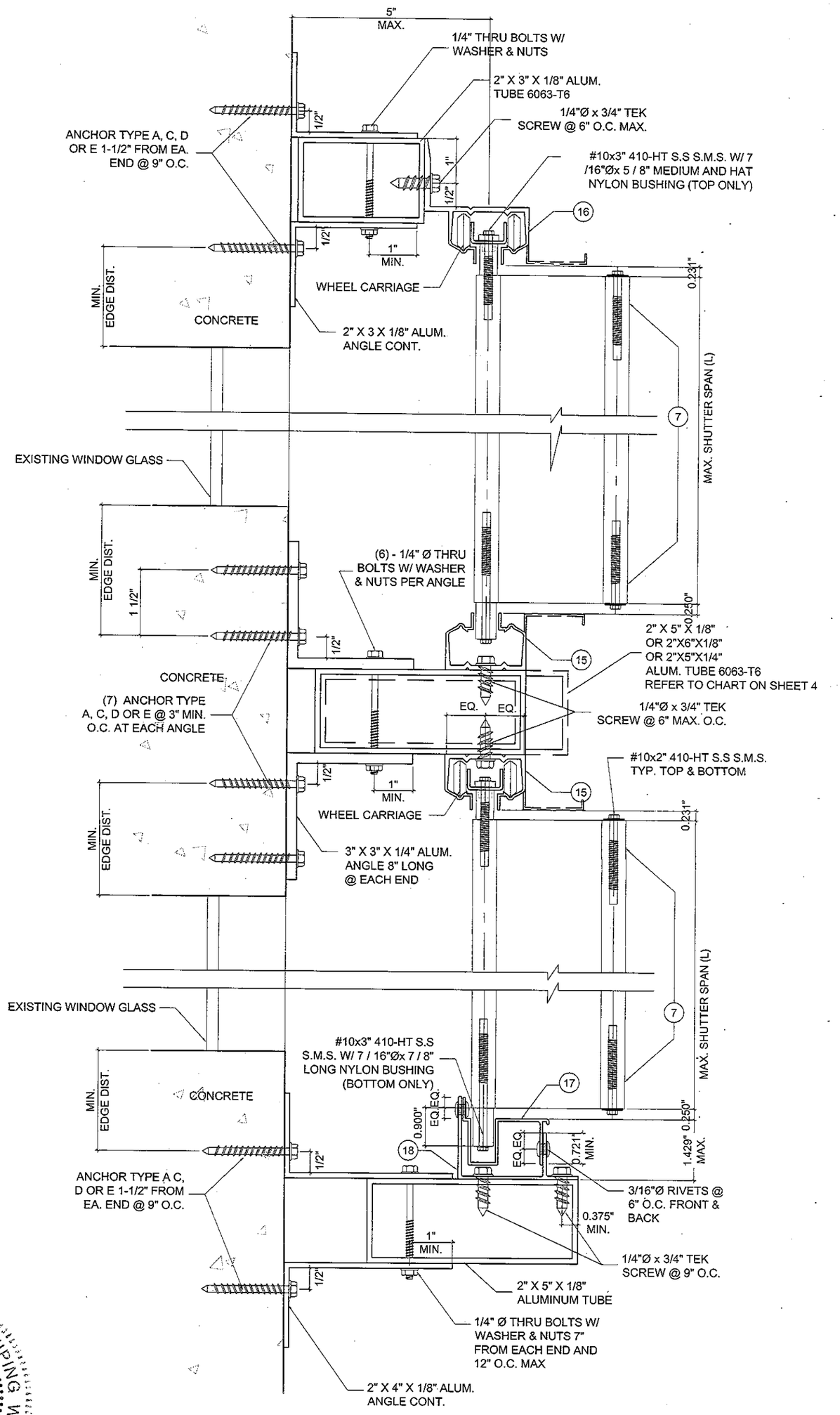

13 B.O WALL MOUNTING INSTALLATION
HEAVY DUTY TRACK

Approved as complying with the Florida Building Code
Date 09/13/2012
NOA# 12-0514.14
Miami Dade Product Control
By

MIAMI DADE COUNTY

YIPING WANG
LICENSE
YIPING WANG, P.E.
FLORIDA REGISTRATION
PE #55983
C.A.N. 28677
STATE OF FLORIDA
PROFESSIONAL ENGINEER
MAY 11 2012

15 OF 15	DRAWING NO. AD12-41	PROJECT MCY 12-098	DATE 05-11-12
		DRAWN M.M.	SCALE AS NOTED

GSS - 1 GENESIS SHUTTER SYSTEM

NFC ALUMINUM INC.

9811 NW 80 AVE. BAY 7A / 7B
HIALEAH GARDENS, FL. 33016
P: (305) 733 - 6235

MCY ENGINEERING, INC.
GLAZING CONSULTANTS
8501 SW 124 AVE. STE. 205A
MIAMI, FL. 33183
P: 305.271.0117
F: 786.573.5063
www.MCYEngineering.com
MCY.Engineering@Att.net

REVISIONS		
NO.	DATE	DESCRIPTION