MIAMI-DADE COUNTY
DEPARTMENT OF PERMITTING, ENVIRONMENT, AND REGULATORY AFFAIRS (PERA)
BOARD AND CODE ADMINISTRATION DIVISION

MIAMI–DADE COUNTY, FLORIDA
PRODUCT CONTROL SECTION
11805 S.W. 26th Street, Room 208
Miami, Florida 33175–2474
T (786) 315–2590 F (786) 315–2599
www.miamidade.gov/pera

NOTICE OF ACCEPTANCE (NOA)

Glass Tech Engineering, Inc.
8321 N. W. 70 Street
Miami, FL 33166

SCOPE:

This NOA is being issued under the applicable rules and regulations governing the use of construction materials. The documentation submitted has been reviewed and accepted by Miami–Dade County PERA–Product Control Section to be used in Miami–Dade County and other areas where allowed by the Authority Having Jurisdiction (AHJ).

This NOA shall not be valid after the expiration date stated below. The Miami–Dade County Product Control Section (In Miami–Dade County) and/or the AHJ (in areas other than Miami–Dade County) reserve the right to have this product or material tested for quality assurance purposes. If this product or material fails to perform in the accepted manner, the manufacturer will incur the expense of such testing and the AHJ may immediately revoke, modify, or suspend the use of such product or material within their jurisdiction. PERA reserves the right to revoke this acceptance, if it is determined by Miami–Dade County Product Control Section that this product or material fails to meet the requirements of the applicable building code.

This product is approved as described herein, and has been designed to comply with the Florida Building Code, including the High Velocity Hurricane Zone.

DESCRIPTION: Series "2047" Aluminum Curtain Wall System –LMI

APPROVAL DOCUMENT: Drawing No. **W08-17** titled "Series -2047 Alum Curtain Wall System-LMI", sheets 1 through 19 of 19 dated 02/18/08 prepared by Al-Farooq Corporation, with revision **C** dated 04/20/12, signed and sealed by Javad Ahmad, P. E., bearing the Miami–Dade County Product Control Section revision stamp with the Notice of Acceptance number and expiration date by the Miami–Dade County Product Control Section.

MISSILE IMPACT RATING: Large and Small Missile Impact Resistant

LABELING: Each unit shall bear a permanent label with the manufacturer's name or logo, city, state, model/series, and following statement: "Miami–Dade County Product Control Approved", unless otherwise noted herein.

RENEWAL of this NOA shall be considered after a renewal application has been filed and there has been no change in the applicable building code negatively affecting the performance of this product.

TERMINATION of this NOA will occur after the expiration date or if there has been a revision or change in the materials, use, and/ or manufacture of the product or process. Misuse of this NOA as an endorsement of any product, for sales, advertising or any other purposes shall automatically terminate this NOA. Failure to comply with any section of this NOA shall be cause for termination and removal of NOA.

ADVERTISEMENT: The NOA number preceded by the words Miami–Dade County, Florida, and followed by the expiration date may be displayed in advertising literature. If any portion of the NOA is displayed, then it shall be done in its entirety.

INSPECTION: A copy of this entire NOA shall be provided to the user by the manufacturer or its distributors and shall be available for inspection at the job site at the request of the Building Official.

This NOA **revises NOA No. 08-0610.07** and consists of this page 1 and evidence pages E–1 and E–2, as well as approval document mentioned above.

The submitted documentation was reviewed by **Jaime D. Gascon, P. E.**

MIAMI-DADE COUNTY APPROVED

J. Gascon 7/17/12

NOA No. 12–0514.16
Expiration Date: October 9, 2013
Approval Date: July 26, 2012

Glass Tech Engineering, Inc.

NOTICE OF ACCEPTANCE: EVIDENCE SUBMITTED

A. DRAWINGS

1. Manufacturer's die drawings and sections.
   (Submitted under previous NOA No. 08-0610.07)
2. Drawing No. **W08-17** titled "Series -2047 Alum Curtain Wall System-LMI", sheets 1 through 19 of 19 dated 02/18/08 prepared by Al-Farooq Corporation, with revision **C** dated 04/20/12, signed and sealed by Javad Ahmad, P. E.

B. TESTS

1. Test report on 1) Air Infiltration Test, per FBC, TAS 202-94
   2) Uniform Static Air Pressure Test, Loading per FBC, TAS 202-94
   3) Water Resistance Test, per FBC, TAS 202-94
   4) Large Missile Impact Test, FBC, TAS 201-94
   5) Small Missile Impact Test, FBC, TAS 201-94
   6) Cyclic Loading Test, per FBC, TAS 203-94

   along with installation diagram of an aluminum curtain wall system prepared by Fenestration Testing Laboratories, Inc. Test Report No(s): **FTL-5435** dated 01/07/08, FTL-**5414** dated 10/19/07, **FTL-5415**, dated 12/20/07, all signed and sealed by Carlos Rionda, P.E. (Note: The above test report have been revised by addendum letters dated July 14, 2008 and August 21, 20068, issued by Fenestration Testing lab.)
   (Submitted under previous NOA No. 08-0610.07)

C. CALCULATIONS

1. Anchor Calculations & structural analysis, dated 07/16/08 and last revised on 09-04-08, prepared by Al-Farooq Corporation, signed & sealed by Dr. Humayoun Farooq, P. E. ***(Submitted under previous NOA No. 08-0610.07)***
2. **Glazing complies with ASTM E 1300–04**

D. QUALITY ASSURANCE

1. Miami–Dade Department of Permitting, Environment, and Regulatory Affairs (PERA).

E. MATERIAL CERTIFICATIONS

1. Notice of Acceptance No. **11–0624.02** issued to E. I. DuPont DeNemours & Co., Inc. for their "**DuPont Sentry Glass® Interlayer**" dated 05/26/2010, expiring on 01/14/17.
2. Notice of Acceptance No. **11–1102.09** issued to Solutia Inc. for their **"Saflex CP – Saflex and Saflex HP Composite Glass Interlayers with PET Core"** dated 6/14/12, expiring on 12/11/13.

Jaime D. Gascon, P. E.
Product Control Section Supervisor
NOA No. 12–0514.16
Expiration Date: October 9, 2013
Approval Date: July 26, 2012

NOTICE OF ACCEPTANCE: EVIDENCE SUBMITTED

F. STATEMENTS

1. Statement letter of no financial interest, conformance and complying with **FBC–2010**, issued by Al–Farooq Corporation, dated 04/17/12, signed and sealed by Javad Ahmad, P. E.

G. OTHERS

1. Notice of Acceptance No. **08–0610.07**, issued to Glass Tech Engineering, Inc. for their **Series "2047" Aluminum Curtain Wall System –LMI"**, approved on 10/09/08 and expiring on 10/09/13.

Jaime D. Gascon, P. E.
Product Control Section Supervisor
NOA No. 12–0514.16
Expiration Date: October 9, 2013
Approval Date: July 26, 2012

SERIES-2047 ALUM CURTAIN WALL SYSTEM

CURTAIN WALL SYSTEM IS RATED FOR LARGE MISSILE IMPACT.
SHUTTERS ARE NOT REQD.

CODE REQUIREMENTS FOR SAFEGUARDS MUST BE OBSERVED.

THIS PRODUCT HAS BEEN DESIGNED AND TESTED TO COMPLY WITH THE REQUIREMENTS OF THE FLORIDA BUILDING CODE INCLUDING HIGH VELOCITY HURRICANE ZONE (HVHZ).

ANCHORS SHALL BE AS LISTED, SPACED AS SHOWN ON DETAILS, ANCHORS EMBEDMENT TO BASE MATERIAL SHALL BE BEYOND WALL DRESSING OR STUCCO.

ANCHORING OR LOADING CONDITIONS NOT SHOWN IN THESE DETAILS ARE NOT PART OF THIS APPROVAL.

MATERIALS INCLUDING BUT NOT LIMITED TO STEEL/METAL SCREWS, THAT COME INTO CONTACT WITH OTHER DISSIMILAR MATERIALS SHALL MEET THE REQUIREMENTS OF THE FLORIDA BLDG. CODE SECTION 2003.8.4.

INSTRUCTIONS:

USE CHARTS AS FOLLOWS.

STEP 1 DETERMINE DESIGN WIND LOAD REQUIREMENT BASED ON WIND VELOCITY, BLDG. HEIGHT, WIND ZONE USING APPLICABLE ASCE 7 STANDARD.

STEP 2 SEE CHARTS ON SHEET 3 FOR DESIGN LOAD CAPACITY OF DESIRED GLASS SIZE.

STEP 3 CHECK MULLION CAPACITY FOR A GIVEN SPACING AND HEIGHT USING CHARTS ON SHEETS 4 THRU 7.

STEP 4 USING HEAD/SILL ANCHOR DETAILS ON SHEET 8 SELECT ANCHOR OPTION WITH DESIGN RATING MORE THAN DESIGN LOAD SPECIFIED IN STEP 1 ABOVE.

STEP 5 CHECK INTERMEDIATE ANCHOR CAPACITY FOR MULTIPLE SPANS USING CHARTS OR DETAILS ON SHEETS 12 THRU 16.

STEP 6 THE LOWEST VALUE RESULTING FROM STEPS 2, 3, 4 AND 5 SHALL APPLY TO ENTIRE SYSTEM.

INDEX OF DRAWING

SHEET NO.	DESCRIPTION
1	GENERAL NOTES
2	TYPICAL CURTAIN WALL ELEVATION
3	GLASS CAPACITY CHART
4	SINGLE SPAN MULLION CAPACITY CHART
5	DOOR MULLION CAPACITY CHART
6	TWIN SPAN MULLION CAPACITY CHART
7 & 7.1	CORNER MULLION CAPACITY CHART
8	HEAD/SILL ANCHOR CAPACITY CHART
9 & 10	VERTICAL AND HORIZONTAL SECTION DETAILS
11	CORNER MULLION DETAILS
12 THRU 14	WIND LOAD + DEAD LOAD ANCHOR DETAILS
15 & 16	WIND LOAD + DEAD LOAD CORNER MULLION ANCHOR DETAILS
17	EXTRUSION DETAILS
18	BILL OF MATERIALS
19	CORNER CONSTRUCTION DETAILS

LAMINATED GLASS
LARGE MISSILE IMPACT

Engr: JAVAD AHMAD
CIVIL
FLA. PE # 70592
C.A.N. 3538

APR 25 2012

PRODUCT REVISED
as complying with the Florida Building Code
Acceptance No 12-0514.16
Expiration Date 10/9/2013
By
Miami Dade Product Control

AL-FAROOQ CORPORATION
ENGINEERS & PRODUCT DEVELOPMENT
1235 S.W. 87 AVE
MIAMI, FLORIDA 33174
TEL. (305) 264-8100 FAX. (305) 262-6978

COMP-ANL\W08-17GTE

SERIES-2047 ALUM CURTAIN WALL SYSTEM (L.M.I.)

GLASS TECH ENGINEERING INC.
8321 N.W. 70TH STREET
MIAMI, FL. 33166
TEL. (305) 594-4321 FAX. (305) 599-2730

revisions:			
no	date	by	description
A	07.09.08		REV. PER BCCO COMMENTS
B	08.28.08		REV. PER BCCO COMMENTS
C	04.20.12		UPDATED TO 2010 FBC

date: 02-18-08
scale: -
dr. by: HAMID
chk. by:

drawing no.
W08-17

sheet 1 of 19

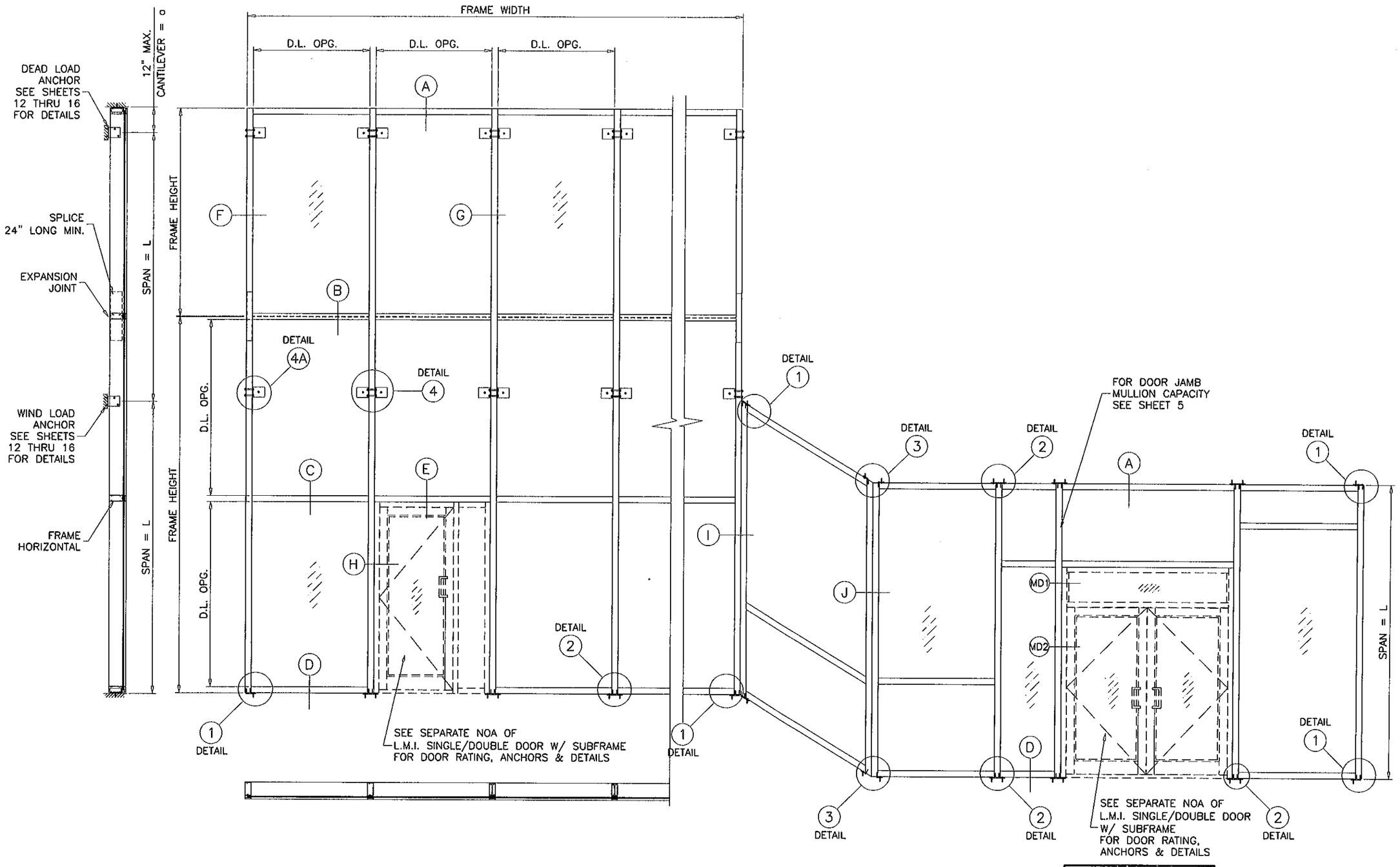

TYPICAL ELEVATION

Engr: JAVAD AHMAD
CIVIL
FLA. PE # 70592
C.A.N. 3538

APR 25 2012

PRODUCT REVISED
as complying with the Florida Building Code
Acceptance No. 12-0514.16
Expiration Date 10/9/2013
By
Miami Dade Product Control

AL-FAROOQ CORPORATION
ENGINEERS & PRODUCT DEVELOPMENT
1235 S.W. 87 AVE
MIAMI, FLORIDA 33174
TEL (305) 264-3100 FAX. (305) 262-6978
COMP-ANL\W08-17GTE

SERIES-2047 ALUM CURTAIN WALL SYSTEM (L.M.I.)

GLASS TECH ENGINEERING INC.
8321 N.W. 70TH STREET
MIAMI, FL. 33166
TEL. (305) 594-4321 FAX. (305) 599-2730

revisions:			
no	date	by	description
A	07.09.08		REV. PER BCCO COMMENTS
B	08.28.08		REV. PER BCCO COMMENTS
C	04.20.12		NO CHANGE THIS SHEET

date: 02-18-08
scale: 1/4"=1'-0"
dr. by: HAMID
chk. by:

drawing no.
W08-17

sheet 2 of 19

GLASS LOAD CAPACITY – PSF		
NOMINAL DIMS.		GLASS TYPES 'A' & 'B'
D.L.O. WIDTH	D.L.O. HEIGHT	EXT. (+) INT. (–)
36"	84"	145.0
39"		145.0
42"		145.0
45"		145.0
48"		145.0
51"		145.0
54"		140.2
57"		135.6
60"		136.0
63"		120.0
66"		120.0
36"	90"	145.0
39"		145.0
42"		145.0
45"		145.0
48"		144.4
51"		137.4
54"		131.9
57"		130.7
60"		120.0
36"	96"	145.0
39"		145.0
42"		145.0
45"		144.7
48"		136.7
51"		129.7
54"		126.8
57"		120.0
57"	96–1/2"	120.7
57"	97–3/8"	119.5
36"	102"	145.0
39"		145.0
42"		145.0
45"		137.3
48"		129.4
51"		120.0
54"		118.5
36"	108"	145.0
39"		145.0
42"		140.2
45"		131.1
48"		125.6
51"		117.7
36"	114"	145.0
39"		144.4
42"		134.9
45"		128.9
48"		119.5

GLASS LOAD CAPACITY – PSF		
NOMINAL DIMS.		GLASS TYPES 'A' & 'B'
D.L.O. WIDTH	D.L.O. HEIGHT	EXT. (+) INT. (–)
36"	120"	145.0
39"		142.2
42"		134.6
45"		120.0
36"	126"	145.0
39"		142.8
42"		120.0
36"	132"	145.0
39"		145.0
42"		120.0
36"	138"	145.0
39"		145.0

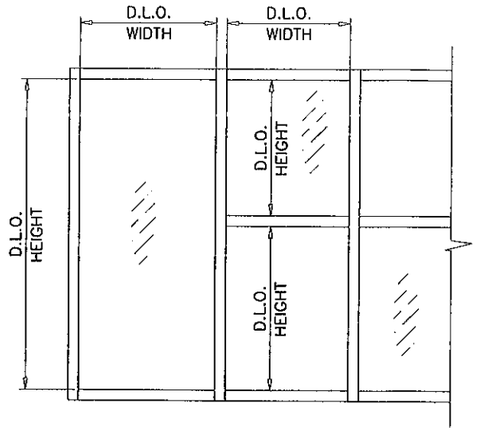

NOTE:
GLASS CAPACITIES ON THIS SHEET ARE BASED ON ASTM E1300–04 (3 SEC. GUSTS)

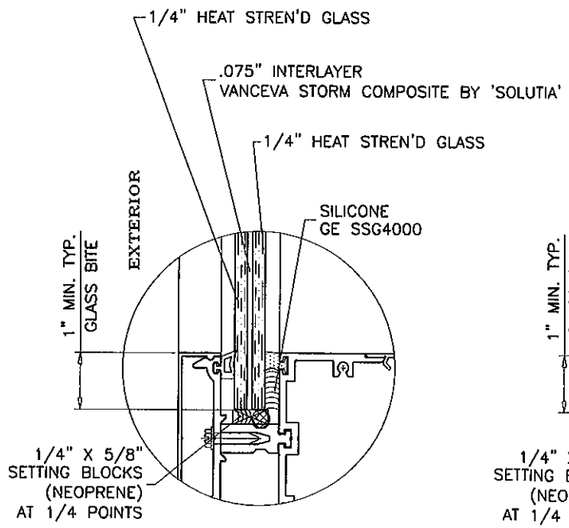

GLASS TYPE 'A'

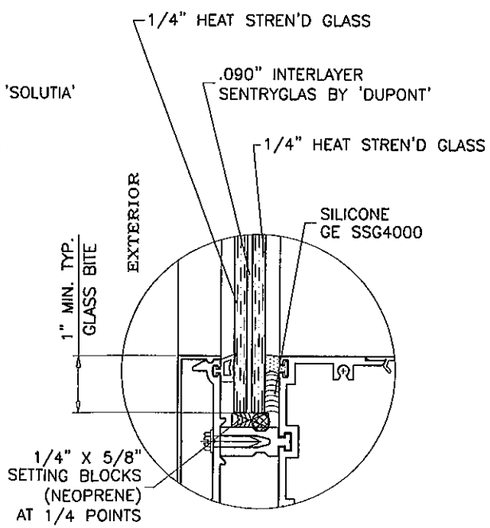

GLASS TYPE 'B'

Engr: JAVAD AHMAD
CIVIL
FLA. PE # 70592
C.A.N. 3538

APR 25 2012

PRODUCT REVISED
as complying with the Florida
Building Code
Acceptance No. 12-0514.16
Expiration Date 10/9/2015
By
Miami-Dade Product Control

AL-FAROOQ CORPORATION
ENGINEERS & PRODUCT DEVELOPMENT
1235 S.W. 87 AVE
MIAMI, FLORIDA 33174
TEL. (305) 264-8100 FAX. (305) 262-6978
COMP-ANL\W08-17GTE

SERIES-2047 ALUM CURTAIN WALL SYSTEM (L.M.I.)

GLASS TECH ENGINEERING INC.
8321 N.W. 70TH STREET
MIAMI, FL. 33166
TEL. (305) 594-4321 FAX. (305) 599-2730

revisions:

no	date	by	description
A	07.09.08		REV. PER BCCO COMMENTS
B	08.28.08		NO CHANGE THIS SHEET
C	04.20.12		UPDATED TO 2010 FBC

date: 02-18-08
scale: 3/8" = 1"
dr. by: HAMID
chk. by:

drawing no.
W08–17

MULLION LOAD CAPACITY - PSF
SINGLE SPANS WITH INTERMEDIATE HORIZONTALS

NOMINAL DIMS.		MULLION 'M1'	MULLION 'M2'	MULLION 'M3'	MULLION 'M4'	JAMB 'J1'	JAMB 'J2'
WIDTH (W)	FRAME HEIGHT	EXT. (+) INT. (-)	EXT. (+) INT. (-)	EXT. (+) INT. (-)	EXT. (+) INT. (-)	EXT. (+) INT. (-)	EXT. (+) INT. (-)
36"	102"	90.0	145.0	145.0	145.0	145.0	145.0
42"		90.0	145.0	145.0	145.0	145.0	145.0
48"		90.0	145.0	145.0	145.0	145.0	145.0
54"		90.0	145.0	145.0	145.0	145.0	145.0
60"		90.0	145.0	145.0	145.0	145.0	145.0
66"		90.0	145.0	145.0	145.0	145.0	145.0
72"		90.0	145.0	145.0	145.0	145.0	145.0
78"		90.0	145.0	145.0	145.0	145.0	145.0
84"		90.0	145.0	145.0	145.0	145.0	145.0
36"	108"	90.0	145.0	145.0	145.0	145.0	145.0
42"		90.0	145.0	145.0	145.0	145.0	145.0
48"		90.0	145.0	145.0	145.0	145.0	145.0
54"		90.0	145.0	145.0	145.0	145.0	145.0
60"		90.0	145.0	145.0	145.0	145.0	145.0
66"		90.0	145.0	145.0	145.0	145.0	145.0
72"		90.0	145.0	145.0	145.0	145.0	145.0
78"		86.7	145.0	145.0	145.0	145.0	145.0
36"	114"	90.0	145.0	145.0	145.0	145.0	145.0
42"		90.0	145.0	145.0	145.0	145.0	145.0
48"		90.0	145.0	145.0	145.0	145.0	145.0
54"		90.0	145.0	145.0	145.0	145.0	145.0
60"		90.0	145.0	145.0	145.0	145.0	145.0
66"		90.0	145.0	145.0	145.0	145.0	145.0
72"		83.0	145.0	145.0	145.0	145.0	145.0
36"	120"	90.0	145.0	145.0	145.0	145.0	145.0
42"		90.0	145.0	145.0	145.0	145.0	145.0
48"		90.0	145.0	145.0	145.0	145.0	145.0
54"		90.0	145.0	145.0	145.0	145.0	145.0
60"		88.5	145.0	145.0	145.0	145.0	145.0
66"		80.5	142.3	145.0	145.0	145.0	145.0
72"		73.8	130.5	145.0	145.0	145.0	145.0
36"	126"	90.0	145.0	145.0	145.0	145.0	145.0
42"		90.0	145.0	145.0	145.0	145.0	145.0
48"		90.0	145.0	145.0	145.0	145.0	145.0
54"		87.9	145.0	145.0	145.0	145.0	145.0
60"		79.1	140.3	145.0	145.0	145.0	145.0
66"		71.9	127.5	145.0	145.0	143.8	145.0
36"	132"	90.0	145.0	145.0	145.0	145.0	145.0
42"		90.0	145.0	145.0	145.0	145.0	145.0
48"		88.7	145.0	145.0	145.0	145.0	145.0
54"		78.9	140.3	145.0	145.0	145.0	145.0
60"		71.0	126.3	145.0	145.0	142.0	145.0
36"	138"	90.0	145.0	145.0	145.0	145.0	145.0
42"		90.0	145.0	145.0	145.0	145.0	145.0
48"		80.0	142.8	145.0	145.0	145.0	145.0
54"		71.1	126.9	145.0	145.0	142.2	145.0
60"		64.0	114.2	139.0	145.0	128.0	145.0
36"	144"	90.0	145.0	145.0	145.0	145.0	145.0
42"		82.8	145.0	145.0	145.0	145.0	145.0
48"		72.4	129.6	145.0	145.0	144.9	145.0
54"		64.4	115.2	141.8	145.0	128.8	145.0
60"		57.9	103.7	127.7	145.0	115.9	145.0

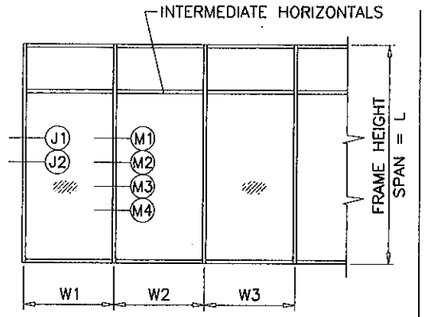

WIDTH (W) = W1
AT FRAME JAMB

WIDTH (W) = $\frac{W2 + W3}{2}$
AT FRAME MULLION

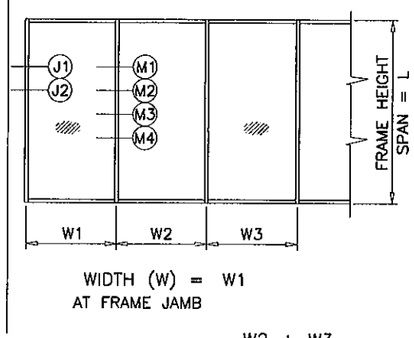

WIDTH (W) = W1
AT FRAME JAMB

WIDTH (W) = $\frac{W2 + W3}{2}$
AT FRAME MULLION

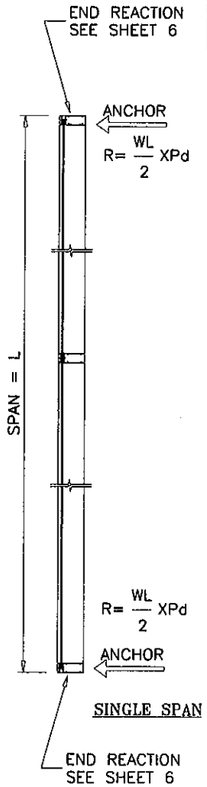

MULLION LOAD CAPACITY - PSF
SINGLE SPANS WITHOUT INTERMEDIATE HORIZONTALS

NOMINAL DIMS.		MULLION 'M1'	MULLION 'M2'	MULLION 'M3'	MULLION 'M4'	JAMB 'J1'	JAMB 'J2'
WIDTH (W)	FRAME HEIGHT	EXT. (+) INT. (-)	EXT. (+) INT. (-)	EXT. (+) INT. (-)	EXT. (+) INT. (-)	EXT. (+) INT. (-)	EXT. (+) INT. (-)
36"	102"	90.0	145.0	145.0	145.0	145.0	145.0
42"		90.0	145.0	145.0	145.0	145.0	145.0
48"		90.0	145.0	145.0	145.0	145.0	145.0
54"		90.0	145.0	145.0	145.0	145.0	145.0
60"		90.0	145.0	145.0	145.0	145.0	145.0
36"	108"	90.0	145.0	145.0	145.0	145.0	145.0
42"		90.0	145.0	145.0	145.0	145.0	145.0
48"		90.0	145.0	145.0	145.0	145.0	145.0
54"		90.0	145.0	145.0	145.0	145.0	145.0
36"	114"	90.0	145.0	145.0	145.0	145.0	145.0
42"		90.0	145.0	145.0	145.0	145.0	145.0
48"		90.0	145.0	145.0	145.0	145.0	145.0
36"	120"	90.0	145.0	145.0	145.0	145.0	145.0
42"		90.0	145.0	145.0	145.0	145.0	145.0
48"		90.0	145.0	145.0	145.0	145.0	145.0
36"	126"	90.0	145.0	145.0	145.0	145.0	145.0
42"		90.0	145.0	145.0	145.0	145.0	145.0
36"	132"	90.0	145.0	145.0	145.0	145.0	145.0
42"		90.0	145.0	145.0	145.0	145.0	145.0
36"	138"	90.0	145.0	145.0	145.0	145.0	145.0
42"		89.7	145.0	145.0	145.0	145.0	145.0
36"	144"	90.0	145.0	145.0	145.0	145.0	145.0

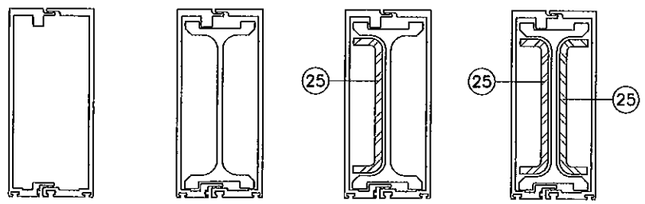

MULLION 'M1'
JAMB 'J1'

MULLION 'M2'
JAMB 'J2'

MULLION 'M3'

MULLION 'M4'

M1/J1	ALUM
Ix IN^4	21.1207
Sx IN^3	5.9127

M2/J2	ALUM
Ix IN^4	34.9932
Sx IN^3	9.7963

M3	ALUM	STEEL
Ix IN^4	34.9932	3.0917
Sx IN^3	9.7963	1.3018

M4	ALUM	STEEL
Ix IN^4	34.9932	6.1834
Sx IN^3	9.7963	2.6035

REINF. LENGTH = MULL LENGTH-6"

Engr: JAVAD AHMAD
CIVIL
FLA. PE # 70592
C.A.N. 3538

PRODUCT REVISED
as complying with the Florida Building Code
Acceptance No. 12-0514.16
Expiration Date 10/9/2013
By Miami Dade Product Control

AL-FAROOQ CORPORATION
ENGINEERS & PRODUCT DEVELOPMENT
1235 S.W. 87 AVE
MIAMI, FLORIDA 33174
TEL. (305) 264-3100 FAX. (305) 262-6978
COMP-ANL\W08-17GTE

SERIES-2047 ALUM CURTAIN WALL SYSTEM (L.M.I.)

GLASS TECH ENGINEERING INC.
8321 N.W. 70TH STREET
MIAMI, FL. 33166
TEL. (305) 594-4321 FAX. (305) 599-2730

revisions:			
no	date	by	description
A	07.09.08		REV. PER BCCO COMMENTS
B	08.28.08		REV. PER BCCO COMMENTS
C	04.20.12		NO CHANGE THIS SHEET

date: 02-18-08
scale: 3/8" = 1"
dr. by: HAMID
chk. by:

drawing no.
W08-17

sheet 4 of 19

APR 25 2012

DOOR MULLION LOAD CAPACITY – PSF

NOMINAL DIMS.				MULLION 'MD1'	MULLION 'MD2'
WIDTH (W1)	WIDTH (W2)	LENGTH (A)	SPAN LENGTH (L)	EXT.(+) INT.(–)	EXT.(+) INT.(–)
74–5/8"	30"	84"	108"	90.0	90.0
	36"			90.0	90.0
	42"			90.0	90.0
	48"			90.0	90.0
	54"			90.0	90.0
	60"			90.0	90.0
	72"			90.0	90.0
86–5/8"	30"			90.0	90.0
	36"			90.0	90.0
	42"			90.0	90.0
	48"			90.0	90.0
	54"			90.0	90.0
	60"			90.0	90.0
	72"			90.0	90.0
74–5/8"	30"	84"	120"	90.0	90.0
	36"			90.0	90.0
	42"			90.0	90.0
	48"			90.0	90.0
	54"			90.0	90.0
	60"			88.4	90.0
	72"			80.7	90.0
86–5/8"	30"			90.0	90.0
	36"			90.0	90.0
	42"			90.0	90.0
	48"			89.8	90.0
	54"			85.6	90.0
	60"			81.8	90.0
	72"			75.2	88.7
74–5/8"	30"	84"	132"	90.0	90.0
	36"			85.6	90.0
	42"			81.1	90.0
	48"			77.1	90.0
	54"			73.4	90.0
	60"			70.1	90.0
	72"			64.2	88.1
86–5/8"	30"			81.6	90.0
	36"			77.5	90.0
	42"			73.9	90.0
	48"			70.5	90.0
	54"			67.4	90.0
	60"			64.6	89.5
74–5/8"	30"	84"	144"	72.7	90.0
	36"			68.9	90.0
	42"			65.4	90.0
	48"			62.3	90.0
	54"			59.5	90.0
	60"			56.9	90.0
	72"			–	90.0
86–5/8"	30"			65.4	90.0
	36"			62.3	90.0
	42"			59.5	90.0
	48"			56.9	90.0

DOOR MULLION LOAD CAPACITY – PSF

NOMINAL DIMS.				MULLION 'MD1'	MULLION 'MD2'
WIDTH (W1)	WIDTH (W2)	LENGTH (A)	SPAN LENGTH (L)	EXT.(+) INT.(–)	EXT.(+) INT.(–)
74–5/8"	30"	96"	108"	90.0	90.0
	36"			90.0	90.0
	42"			90.0	90.0
	48"			90.0	90.0
	54"			90.0	90.0
	60"			90.0	90.0
	72"			90.0	90.0
86–5/8"	30"			90.0	90.0
	36"			90.0	90.0
	42"			90.0	90.0
	48"			90.0	90.0
	54"			90.0	90.0
	60"			90.0	90.0
	72"			90.0	90.0
74–5/8"	30"	96"	120"	90.0	90.0
	36"			90.0	90.0
	42"			90.0	90.0
	48"			90.0	90.0
	54"			90.0	90.0
	60"			90.0	90.0
	72"			85.8	90.0
86–5/8"	30"			90.0	90.0
	36"			90.0	90.0
	42"			90.0	90.0
	48"			90.0	90.0
	54"			90.0	90.0
	60"			88.1	90.0
	72"			80.4	86.2
74–5/8"	30"	96"	132"	90.0	90.0
	36"			90.0	90.0
	42"			87.1	90.0
	48"			82.5	90.0
	54"			78.2	90.0
	60"			74.4	90.0
	72"			67.8	86.0
86–5/8"	30"			89.0	90.0
	36"			84.1	90.0
	42"			79.8	90.0
	48"			75.8	90.0
	54"			72.3	90.0
	60"			69.0	87.0
74–5/8"	30"	96"	144"	78.1	90.0
	36"			73.7	90.0
	42"			69.8	90.0
	48"			66.2	90.0
	54"			63.0	90.0
	60"			60.1	87.8
86–5/8"	30"			70.5	90.0
	36"			66.9	90.0
	42"			63.7	90.0
	48"			60.7	90.0

DOOR MULLION LOAD CAPACITY – PSF

NOMINAL DIMS.				MULLION 'MD1'	MULLION 'MD2'
WIDTH (W1)	WIDTH (W2)	LENGTH (A)	SPAN LENGTH (L)	EXT.(+) INT.(–)	EXT.(+) INT.(–)
74–5/8"	30"	108"	120"	90.0	90.0
	36"			90.0	90.0
	42"			90.0	90.0
	48"			90.0	90.0
	54"			90.0	90.0
	60"			90.0	90.0
	72"			90.0	90.0
86–5/8"	30"			90.0	90.0
	36"			90.0	90.0
	42"			90.0	90.0
	48"			90.0	90.0
	54"			90.0	90.0
	60"			90.0	90.0
	72"			83.8	83.8
74–5/8"	30"	108"	132"	90.0	90.0
	36"			90.0	90.0
	42"			90.0	90.0
	48"			88.4	90.0
	54"			83.6	90.0
	60"			79.2	90.0
	72"			71.7	83.9
86–5/8"	30"			90.0	90.0
	36"			90.0	90.0
	42"			86.5	90.0
	48"			81.8	90.0
	54"			77.6	88.3
	60"			73.9	84.6
74–5/8"	30"	108"	144"	84.4	90.0
	36"			79.2	90.0
	42"			74.6	90.0
	48"			70.5	90.0
	54"			66.8	89.8
	60"			63.5	85.6
86–5/8"	30"			76.5	90.0
	36"			72.2	90.0
	42"			68.4	90.0
	48"			64.9	90.0

DOOR MULLION LOAD CAPACITY – PSF

NOMINAL DIMS.				MULLION 'MD1'	MULLION 'MD2'
WIDTH (W1)	WIDTH (W2)	LENGTH (A)	SPAN LENGTH (L)	EXT.(+) INT.(–)	EXT.(+) INT.(–)
74–5/8"	30"	120"	132"	90.0	90.0
	36"			90.0	90.0
	42"			90.0	90.0
	48"			90.0	90.0
	54"			89.5	90.0
	60"			84.5	89.3
	72"			76.0	82.0
86–5/8"	30"			90.0	90.0
	36"			90.0	90.0
	42"			90.0	90.0
	48"			88.5	89.7
	54"			83.6	85.8
	60"			79.2	82.3
74–5/8"	30"	120"	144"	90.0	90.0
	36"			85.3	90.0
	42"			79.9	90.0
	48"			75.2	90.0
	54"			71.0	87.6
	60"			67.3	83.6
86–5/8"	30"			83.2	90.0
	36"			78.1	90.0
	42"			73.6	88.3

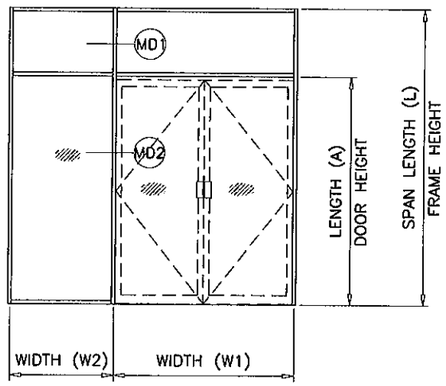

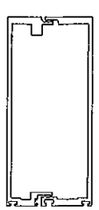

MULLION 'MD1'

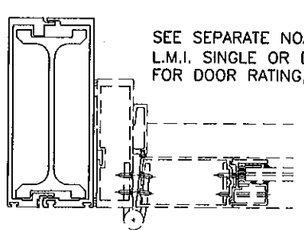

MULLION 'MD2'

SEE SEPARATE NOA OF
L.M.I. SINGLE OR DOUBLE DOOR W/ SUBFRAME
FOR DOOR RATING, ANCHORS & DETAILS

Engr: JAVAD AHMAD
CIVIL
FLA. PE # 70592
C.A.N. 3538

APR 25 2012

PRODUCT REVISED
as complying with the Florida
Building Code
Acceptance No. 12-0514.16
Expiration Date 10/9/2013
By
Miami Dade Product Control

AL-FAROOQ CORPORATION
ENGINEERS & PRODUCT DEVELOPMENT
1235 S.W. 87 AVE
MIAMI, FLORIDA 33174
TEL. (305) 264-8100 FAX. (305) 262-6978
COMP-ANL\W08-17GTE

SERIES-2047 ALUM CURTAIN WALL SYSTEM (L.M.I.)

GLASS TECH ENGINEERING INC.
8321 N.W. 70TH STREET
MIAMI, FL. 33166
TEL. (305) 594-4321 FAX. (305) 599-2730

revisions:			
no	date	by	description
A	07.09.08		REV. PER BCCO COMMENTS
B	08.28.08		REV. PER BCCO COMMENTS
C	04.20.12		NO CHANGE THIS SHEET

date: 02-18-08
scale: 3/8" = 1"
dr. by: HAMID
chk. by:

drawing no.
W08-17

MULLION LOAD CAPACITY – PSF
MULTIPLE SPANS

NOMINAL DIMS.		MULL 'M1' JAMB 'J1'	MULL 'M2' JAMB 'J1'	MULL 'M4' JAMB 'J2'
AVERAGE MULL SPACING	SPAN = L	EXT. (+) INT. (–)	EXT. (+) INT. (–)	EXT. (+) INT. (–)
30"	96"	90.0	145.0	145.0
36"		90.0	145.0	145.0
42"		90.0	145.0	145.0
48"		90.0	145.0	145.0
54"		90.0	145.0	145.0
60"		90.0	145.0	145.0
66"		90.0	131.8	145.0
72"		90.0	120.8	145.0
30"	108"	90.0	145.0	145.0
36"		90.0	145.0	145.0
42"		90.0	145.0	145.0
48"		90.0	145.0	145.0
54"		90.0	143.2	145.0
60"		90.0	128.9	145.0
66"		90.0	117.2	145.0
72"		90.0	107.4	145.0
30"	120"	90.0	145.0	145.0
36"		90.0	145.0	145.0
42"		90.0	145.0	145.0
48"		90.0	145.0	145.0
54"		90.0	128.9	145.0
60"		90.0	116.0	145.0
66"		90.0	105.5	145.0
72"		90.0	96.7	145.0
30"	132"	90.0	145.0	145.0
36"		90.0	145.0	145.0
42"		90.0	145.0	145.0
48"		90.0	131.8	145.0
54"		90.0	117.2	145.0
60"		90.0	105.5	145.0
30"	144'	90.0	145.0	145.0
36"		90.0	145.0	145.0
42"		90.0	138.1	145.0
48"		90.0	120.8	145.0
54"		90.0	107.4	145.0
60"		90.0	96.7	135.0

USE MULLION/JAMB COMBINATIONS
M1/J1, M2/J1, M4/J2

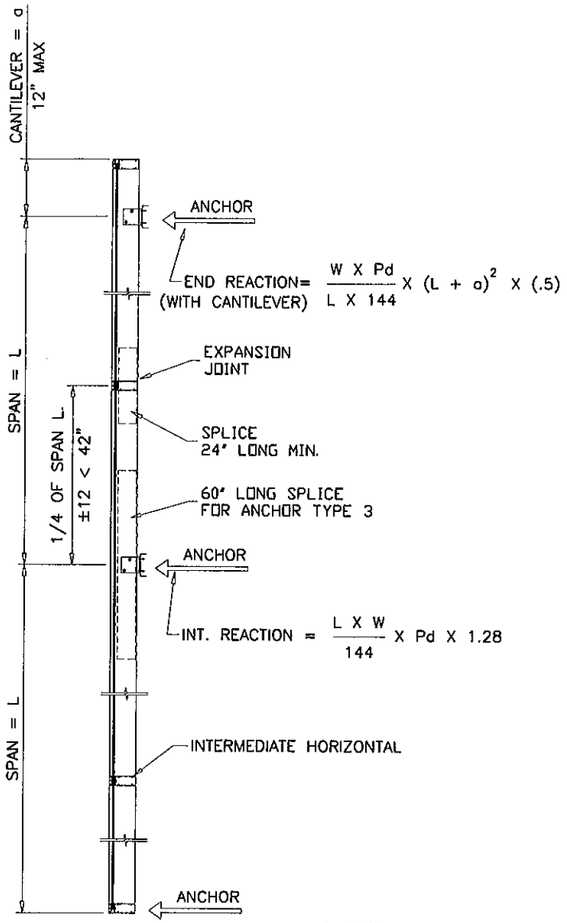

MULTIPLE SPANS

MULTIPLE SPANS WITH OR WITHOUT CANTILEVER
USE TABLE ON THIS SHEET.

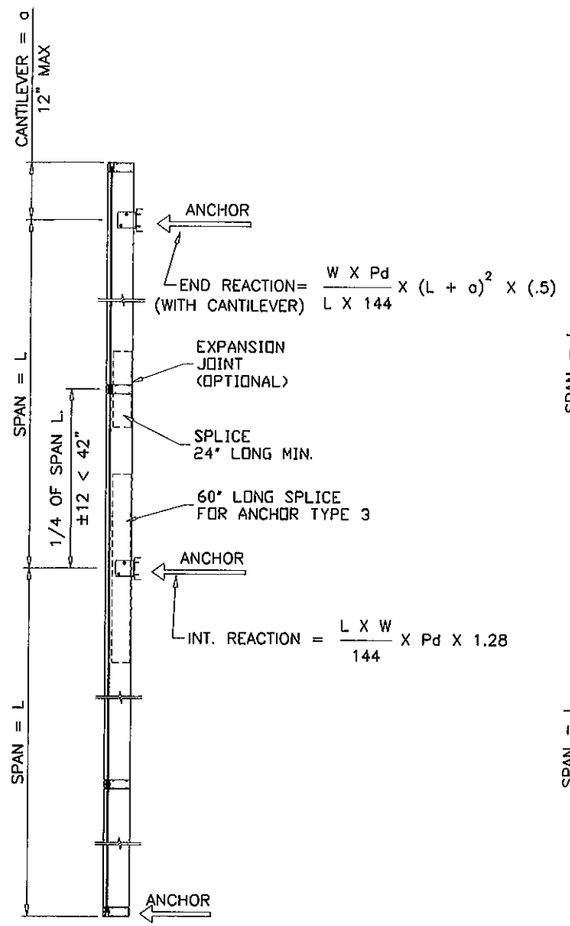

TWO SPANS

TWO SPANS WITH CANTILEVER, WITH
AND WITHOUT SPLICE/EXPANSION JOINT
USE TABLE ON THIS SHEET.

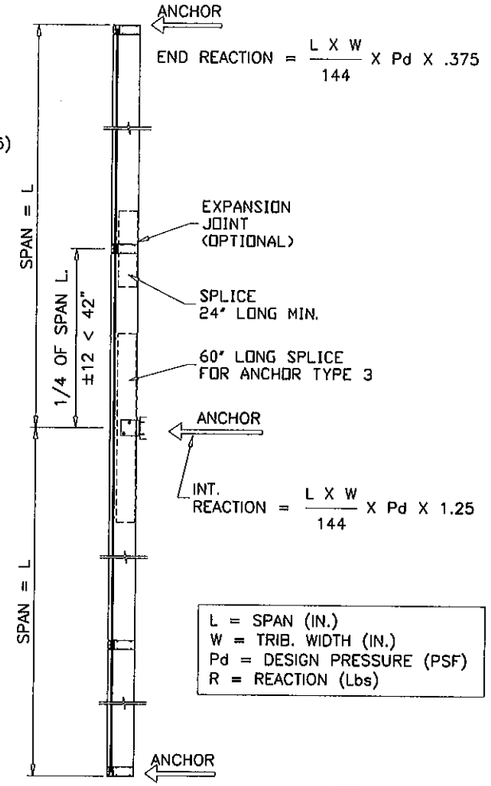

TWO SPANS

TWO SPANS WITHOUT CANTILEVER, WITH
AND WITHOUT SPLICE/EXPANSION JOINT
USE TABLE ON THIS SHEET.

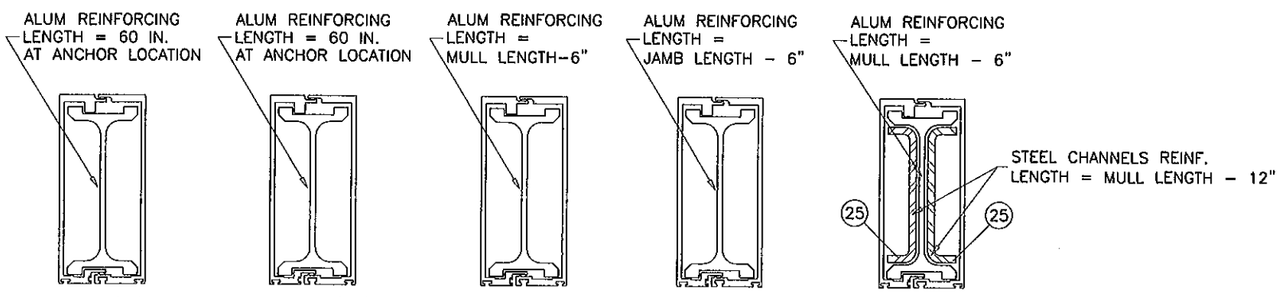

J1	ALUM
Ix IN^4	21.1207
Sx IN^3	5.9127

M1	ALUM
Ix IN^4	21.1207
Sx IN^3	5.9127

M2	ALUM
Ix IN^4	34.9932
Sx IN^3	9.7963

J2	ALUM
Ix IN^4	34.9932
Sx IN^3	9.7963

M4	ALUM	STEEL
Ix IN^4	34.9932	6.1834
Sx IN^3	9.7963	2.6035

NOTE:
TWO SPANS CONTINUOUS MULLION WITHOUT OVERHANG CAN BE INSTALLED.
FOR EACH SPAN USE TABLE ON THIS SHEET.

INTERMEDIATE HORIZONTAL IS AN INTEGRAL PART OF TWO OR MULTIPLE SPANS.

UNEQUAL SPANS TO BE CHECKED ON JOB TO JOB BASIS
UNDER SEPARATE APPROVAL TO BE REVIEWED BY BUILDING OFFICIAL

END REACTIONS MAY CHANGE WITH LOCATION OF EXPANSION JOINT AND LENGTH OF CANTILEVER
WORST CONDITION SHOWN.

Engr: JAVAD AHMAD
CIVIL
FLA. PE # 70592
C.A.N. 3538
APR 25 2012

PRODUCT REVISED
as complying with the Florida Building Code
Acceptance No 12-0514.16
Expiration Date 10/9/2013
By
Miami Dade Product Control

AL-FAROOQ CORPORATION
ENGINEERS & PRODUCT DEVELOPMENT
1235 S.W. 87 AVE
MIAMI, FLORIDA 33174
TEL (305) 264-8100 FAX. (305) 262-6978
COMP-ANL\W08-17GTE

SERIES-2047 ALUM CURTAIN WALL SYSTEM (L.M.I.)
GLASS TECH ENGINEERING INC.
8321 N.W. 70TH STREET
MIAMI, FL. 33166
TEL. (305) 594-4321 FAX. (305) 599-2730

revisions: no	date	by	description
A	07.09.08		REV. PER BCCO COMMENTS
B	08.28.08		REV. PER BCCO COMMENTS
C	04.20.12		NO CHANGE THIS SHEET

date: 02-18-08
scale: 3/8" = 1"
dr. by: HAMID
chk. by:

drawing no.
W08-17

CORNER MULLION LOAD CAPACITY – PSF SINGLE SPANS WITH HORIZONTAL				
NOMINAL DIMS.		MULLION 'M5'	MULLION 'M6'	MULLION 'M7'
WIDTH (W)	SPAN = L	EXT. (+) INT. (–)	EXT. (+) INT. (–)	EXT. (+) INT. (–)
36"	120"	120.0	120.0	120.0
42"		120.0	120.0	120.0
48"		120.0	120.0	120.0
54"		120.0	120.0	120.0
60"		119.0	120.0	120.0
36"	126"	120.0	120.0	120.0
42"		120.0	120.0	120.0
48"		120.0	120.0	120.0
54"		120.0	120.0	120.0
60"		108.0	118.7	120.0
36"	132"	120.0	120.0	120.0
42"		120.0	120.0	120.0
48"		120.0	120.0	120.0
54"		109.3	120.0	120.0
60"		98.4	108.2	117.2
36"	138"	120.0	120.0	120.0
42"		120.0	120.0	120.0
48"		112.5	120.0	120.0
54"		100.0	110.0	119.1
60"		90.0	99.0	107.2
36"	144"	120.0	120.0	120.0
42"		118.1	120.0	120.0
48"		103.3	113.6	120.0
54"		91.9	101.0	109.4
60"		82.7	90.9	98.4

NOTE:
LOADS SHOWN ARE BASED ON
A– EQUAL PANELS ON EACH SIDE OF CORNER
B– LOCATION OF HORIZONTAL AT 42" FROM TOP OR BOTTOM ANCHOR
ALL OTHER CONDITIONS TO BE REVIEWED BY AUTHORITY HAVING JURISDICTION.

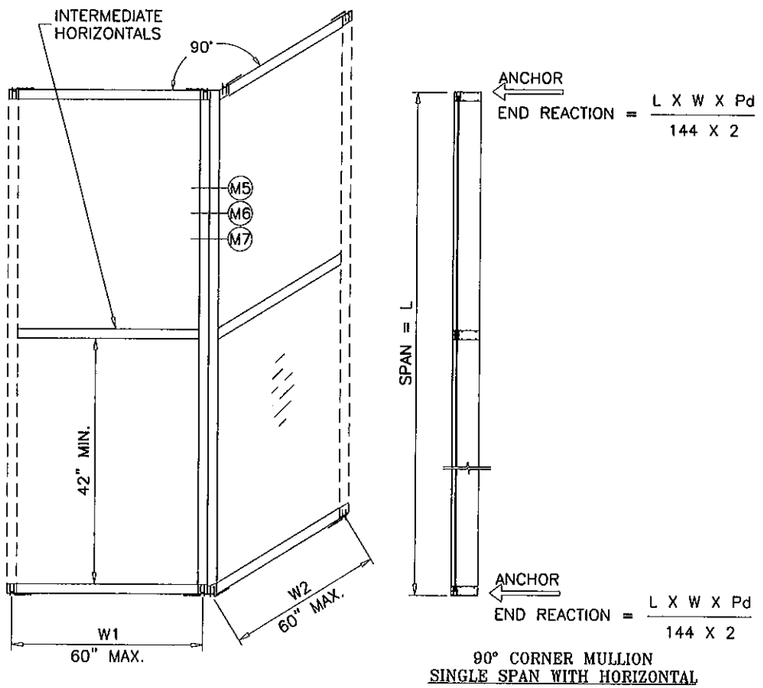

90° CORNER MULLION
SINGLE SPAN WITH HORIZONTAL

WIDTH (W) AT FRAME MULLION = $\frac{W1 + W2}{2} \leq$ W1 OR W2

CORNER MULLION LOAD CAPACITY – PSF SINGLE SPANS WITHOUT HORIZONTAL				
NOMINAL DIMS.		MULLION 'M5'	MULLION 'M6'	MULLION 'M7'
WIDTH (W)	SPAN = L	EXT. (+) INT. (–)	EXT. (+) INT. (–)	EXT. (+) INT. (–)
36"	96"	120.0	120.0	120.0
42"		120.0	120.0	120.0
48"		120.0	120.0	120.0
54"		120.0	120.0	120.0
60"		120.0	120.0	120.0
36"	102"	120.0	120.0	120.0
42"		120.0	120.0	120.0
48"		120.0	120.0	120.0
54"		120.0	120.0	120.0
36"	108"	120.0	120.0	120.0
42"		120.0	120.0	120.0
48"		120.0	120.0	120.0
54"		120.0	120.0	120.0
36"	114"	120.0	120.0	120.0
42"		120.0	120.0	120.0
48"		120.0	120.0	120.0
36"	120"	120.0	120.0	120.0
42"		120.0	120.0	120.0
48"		120.0	120.0	120.0
36"	126"	120.0	120.0	120.0
42"		120.0	120.0	120.0
36"	132"	120.0	120.0	120.0
42"		120.0	120.0	120.0
36"	138"	120.0	120.0	120.0
42"		120.0	120.0	120.0
36"	144"	120.0	120.0	120.0

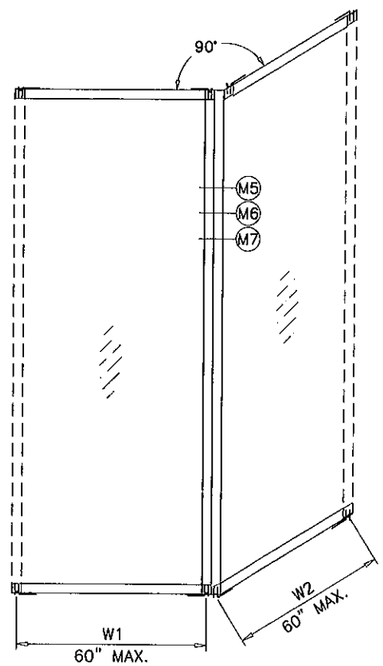

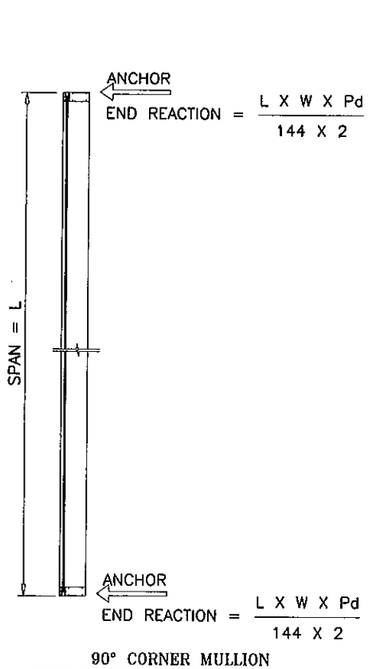

90° CORNER MULLION
SINGLE SPAN WITHOUT HORIZONTAL

WIDTH (W) AT FRAME MULLION = $\frac{W1 + W2}{2} \leq$ W1 OR W2

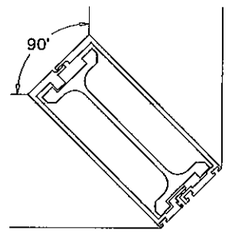

MULLION 'M5'

M5	ALUM
Ix IN^4	18.8266
Sx IN^3	5.7635
Iy IN^4	17.8252
Sy IN^3	5.419

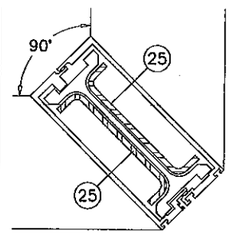

MULLION 'M6'

M6	ALUM	STEEL
Ix IN^4	18.8266	3.1668
Sx IN^3	5.7635	1.4222
Iy IN^4	17.8252	3.1668
Sy IN^3	5.419	1.4222

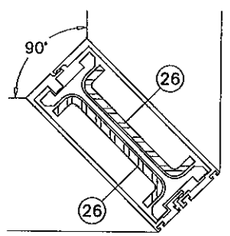

MULLION 'M7'

M7	ALUM	STEEL
Ix IN^4	18.8266	3.8646
Sx IN^3	5.7635	1.7509
Iy IN^4	17.8252	3.8646
Sy IN^3	5.419	1.7509

REINF. LENGTH = MULL LENGTH–6"

Engr: JAVAD AHMAD
CIVIL
FLA. PE # 70592
C.A.N. 3538

APR 25 2012

PRODUCT REVISED
as complying with the Florida Building Code
Acceptance No. 12-0514.16
Expiration Date 10/9/2013
By Miami-Dade Product Control

AL-FAROOQ CORPORATION
ENGINEERS & PRODUCT DEVELOPMENT
1235 S.W. 87 AVE
MIAMI, FLORIDA 33174
TEL. (305) 264-8100 FAX. (305) 262-6978

COMP–ANL\W08–17GTE

SERIES–2047 ALUM CURTAIN WALL SYSTEM (L.M.I.)

GLASS TECH ENGINEERING INC.
8321 N.W. 70TH STREET
MIAMI, FL. 33166
TEL. (305) 594–4321 FAX. (305) 599–2730

revisions:			
no	date	by	description
A	07.09.08		REV. PER BCCO COMMENTS
B	08.28.08		REV. PER BCCO COMMENTS
C	04.20.12		NO CHANGE THIS SHEET

date: 02–18–08
scale: 3/8" = 1"
dr. by: HAMID
chk. by:

drawing no.
W08–17

CORNER MULLION LOAD CAPACITY – PSF TWIN SPANS			
NOMINAL DIMS.		MULLION 'M5'	MULLION 'M6'
WIDTH (W)	SPAN = L	EXT. (+) INT. (–)	EXT. (+) INT. (–)
36"	120"	120.0	120.0
42"		120.0	120.0
48"		120.0	120.0
54"		114.1	120.0
60"		102.7	112.7
36"	126"	120.0	120.0
42"		120.0	120.0
48"		116.4	120.0
54"		103.5	113.6
60"		93.1	102.2
36"	132"	120.0	120.0
42"		120.0	120.0
48"		106.1	116.5
54"		94.3	103.5
60"		84.9	93.2
36"	138"	120.0	120.0
42"		110.9	120.0
48"		97.1	106.6
54"		86.3	94.7
60"		77.6	85.2
36"	144"	118.8	120.0
42"		101.9	111.8
48"		89.1	97.9
54"		79.2	87.0
60"		71.3	78.3

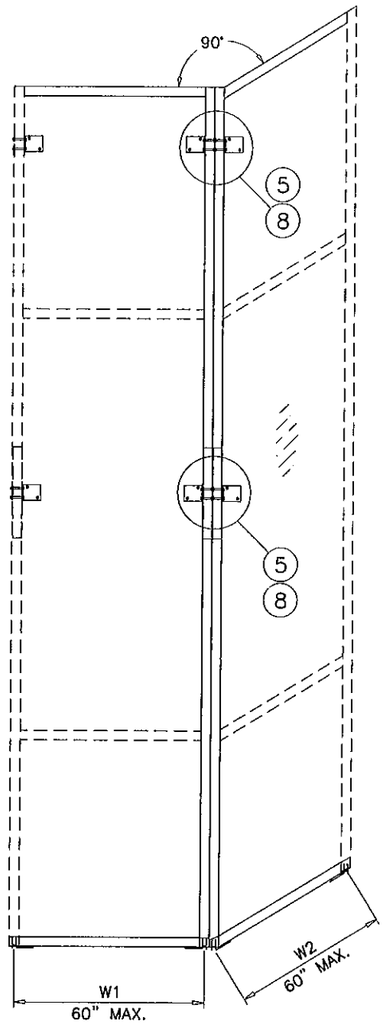

WIDTH (W) AT FRAME MULLION = $\frac{W1 + W2}{2}$

MULTIPLE SPANS

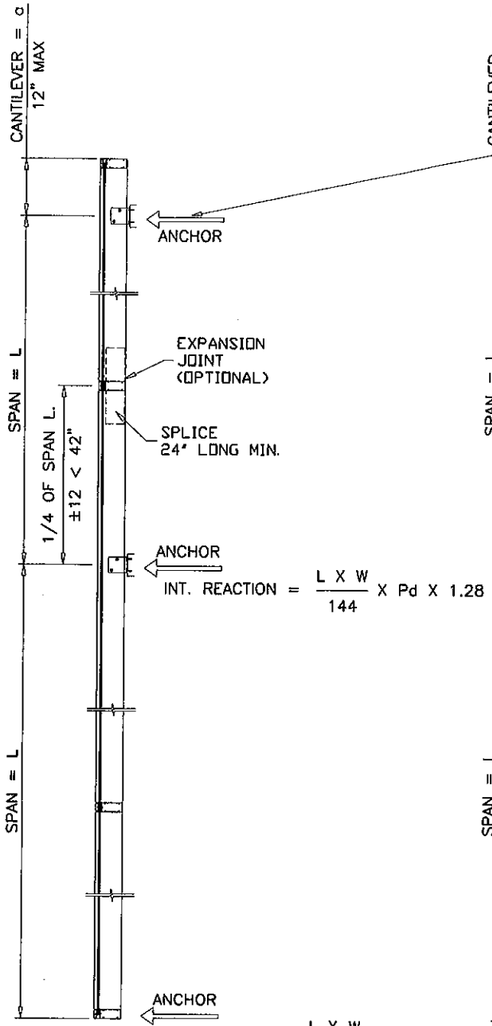

TWO SPANS
W/ CANTILEVER

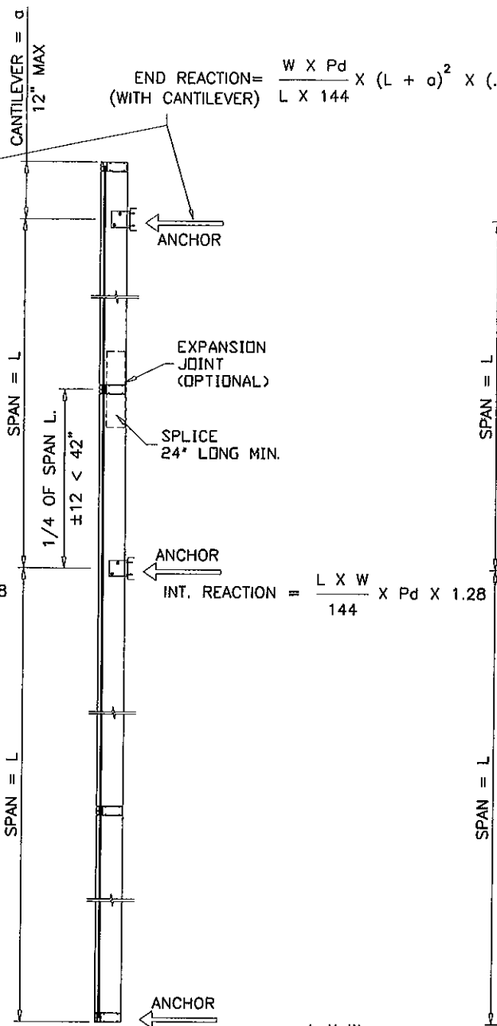

TWO SPANS
W/O CANTILEVER

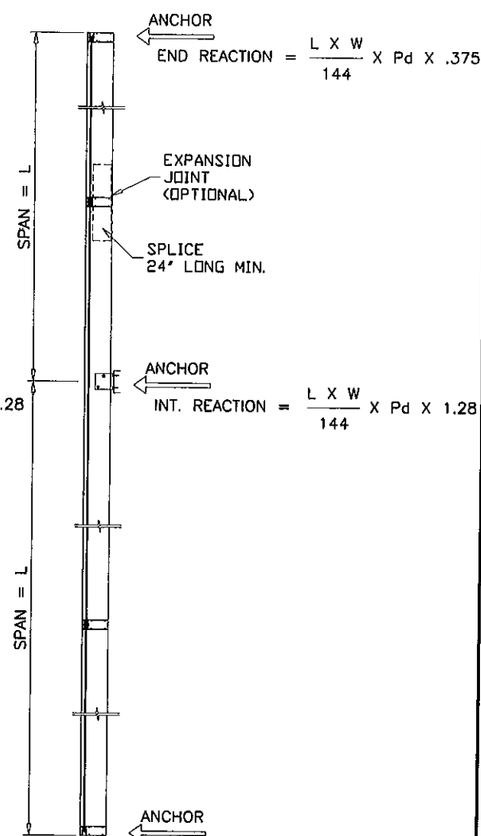

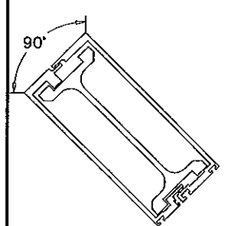

M5	ALUM
Ix IN^4	18.8266
Sx IN^3	5.7635
Iy IN^4	17.8252
Sy IN^3	5.419

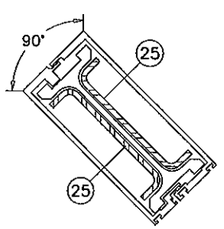

M6	ALUM	STEEL
Ix IN^4	18.8266	3.1668
Sx IN^3	5.7635	1.4222
Iy IN^4	17.8252	3.1668
Sy IN^3	5.419	1.4222

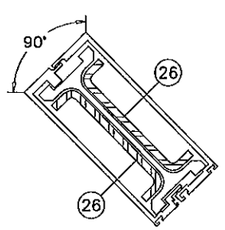

M7	ALUM	STEEL
Ix IN^4	18.8266	3.8646
Sx IN^3	5.7635	1.7509
Iy IN^4	17.8252	3.8646
Sy IN^3	5.419	1.7509

REINF. LENGTH = MULL LENGTH–6"

Engr: JAVAD AHMAD
CIVIL
FLA. PE # 70592
C.A.N. 3538

APR 25 2012

PRODUCT REVISED
as complying with the Florida Building Code
Acceptance No 12-0514.16
Expiration Date 10/9/2013
By Miami Dade Product Control

AL-FAROOQ CORPORATION
ENGINEERS & PRODUCT DEVELOPMENT
1235 S.W. 87 AVE
MIAMI, FLORIDA 33174
TEL. (305) 264-8100 FAX. (305) 262-6978
COMP-ANL\W08-17GTE

SERIES-2047 ALUM CURTAIN WALL SYSTEM (L.M.I.)

GLASS TECH ENGINEERING INC.
8321 N.W. 70TH STREET
MIAMI, FL. 33166
TEL. (305) 594-4321 FAX. (305) 599-2730

revisions:			
no	date	by	description
A	07.09.08		REV. PER BCCO COMMENTS
B	06.28.08		REV. PER BCCO COMMENTS
C	04.20.12		NO CHANGE THIS SHEET

date: 02-18-08
scale: 3/8" = 1"
dr. by: HAMID
chk. by:

drawing no. W08-17

ANCHOR LOAD CAPACITY – PSF EXT.(+) & INT.(–)				
NOMINAL DIMS.		ANCHOR TYPES		
WIDTH (W)	FRAME HT. SPAN–L	'A'	'AA'	'B'
36"	96"	145.0	145.0	145.0
42"		145.0	145.0	145.0
48"		145.0	145.0	145.0
54"		144.3	145.0	145.0
60"		129.9	145.0	145.0
66"		118.0	145.0	145.0
72"		108.2	145.0	145.0
78"		99.9	145.0	145.0
84"		92.8	145.0	145.0
36"	102"	145.0	145.0	145.0
42"		145.0	145.0	145.0
48"		145.0	145.0	145.0
54"		135.8	145.0	145.0
60"		122.2	145.0	145.0
66"		111.1	145.0	145.0
72"		101.8	145.0	145.0
78"		94.0	145.0	145.0
84"		87.3	145.0	145.0
36"	108"	145.0	145.0	145.0
42"		145.0	145.0	145.0
48"		144.3	145.0	145.0
54"		128.2	145.0	145.0
60"		115.4	145.0	145.0
66"		104.9	145.0	145.0
72"		96.2	145.0	145.0
78"		88.8	145.0	145.0
36"	114"	145.0	145.0	145.0
42"		145.0	145.0	145.0
48"		136.7	145.0	145.0
54"		121.5	145.0	145.0
60"		109.3	145.0	145.0
66"		99.4	145.0	145.0
72"		91.1	145.0	145.0
36"	120"	145.0	145.0	145.0
42"		145.0	145.0	145.0
48"		129.9	145.0	145.0
54"		115.4	145.0	145.0
60"		103.9	145.0	145.0
66"		94.4	145.0	145.0
72"		86.6	145.0	145.0
36"	126"	145.0	145.0	145.0
42"		141.3	145.0	145.0
48"		123.7	145.0	145.0
54"		109.9	145.0	145.0
60"		98.9	145.0	145.0
66"		89.9	145.0	145.0
36"	132"	145.0	145.0	145.0
42"		134.9	145.0	145.0
48"		118.0	145.0	145.0
54"		104.9	145.0	145.0
60"		94.4	145.0	145.0

ANCHOR LOAD CAPACITY – PSF EXT.(+) & INT.(–)				
NOMINAL DIMS.		ANCHOR TYPES		
WIDTH (W)	FRAME HT. SPAN–L	'A'	'AA'	'B'
36"	138"	145.0	145.0	145.0
42"		129.0	145.0	145.0
48"		112.9	145.0	145.0
54"		100.4	145.0	145.0
60"		90.3	145.0	145.0
36"	144"	144.3	145.0	145.0
42"		123.7	145.0	145.0
48"		108.2	145.0	145.0
54"		96.2	145.0	145.0
60"		86.6	145.0	145.0

HEAD AND SILL ANCHOR LOAD CAPACITY CHARTS ARE APPLICABLE TO SINGLE AND MULTIPLE SPAN CONDITIONS.

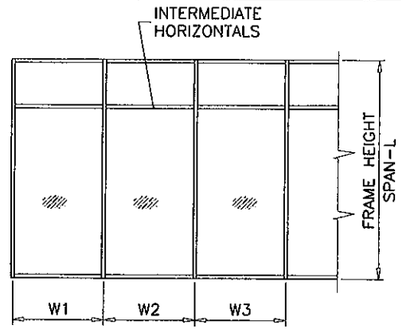

WIDTH (W) = W1
AT FRAME JAMB

WIDTH (W) = $\frac{W2 + W3}{2}$
AT FRAME MULLION

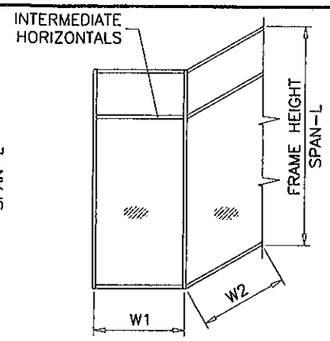

WIDTH (W) = $\frac{W1 + W2}{2}$
AT FRAME MULLION

ANCHOR 'A' (1 PER LEG)
ANCHOR 'AA' (2 PER LEG)

DIRECTLY INTO CONCRETE (f'c = 3000 PSI MIN.)
1/2" DIA. WEDGE–BOLT ANCHOR BY 'POWERS'
WITH 4" MIN. EMBED INTO CONCRETE.
4" MIN. EDGE DIST.
5" MIN. CL TO CL SPACING

ANCHOR 'B'

INTO METAL STRUCTURES (STEEL 1/4" MIN. THICKNESS)
1/2" DIA. MACHINE BOLT GRADE 5 W/ WASHER & NUT
1" MIN. EDGE DIST.

HEAD & SILL ANCHOR LOADS

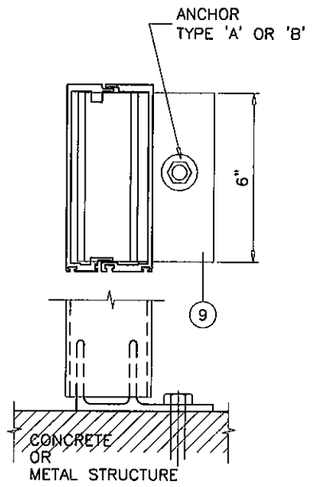

DETAIL '1'
AT JAMB

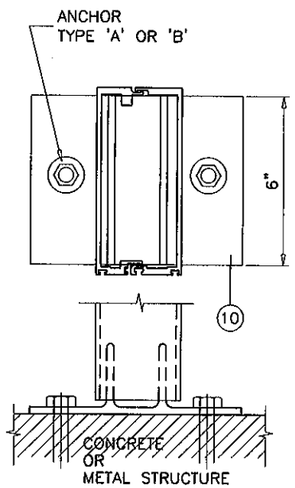

DETAIL '2'
AT MULLION

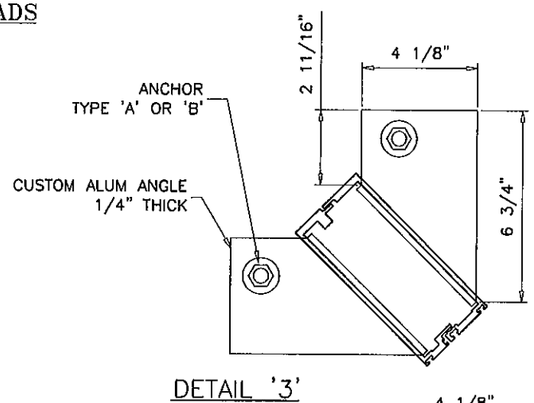

DETAIL '3'
AT 90° CORNER MULLION

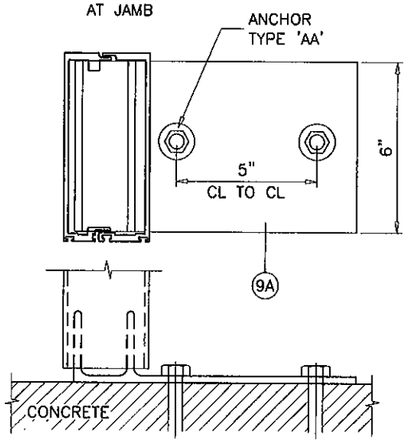

DETAIL '1'
AT JAMB

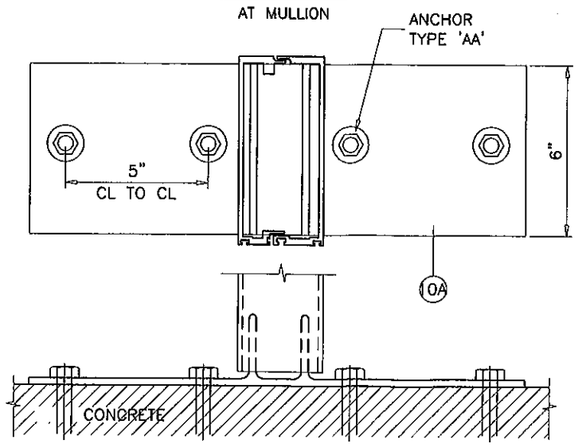

DETAIL '2'
AT MULLION

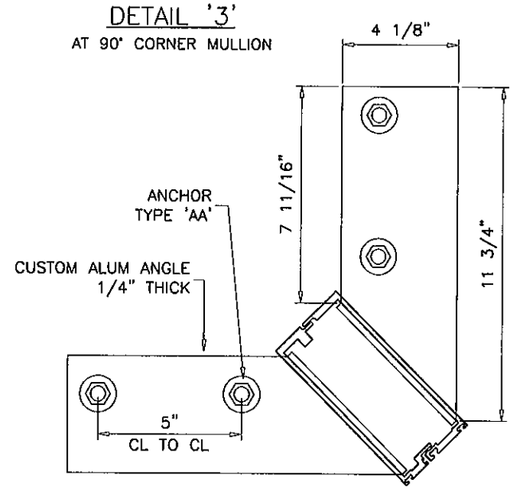

DETAIL '3'
AT 90° CORNER MULLION

Engr: JAVAD AHMAD
CIVIL
FLA. PE # 70592
C.A.N. 3538

APR 25 2012

PRODUCT REVISED
as complying with the Florida Building Code
Acceptance No 12-0514.16
Expiration Date 10/9/2013
By
Miami Dade Product Control

AL-FAROOQ CORPORATION
ENGINEERS & PRODUCT DEVELOPMENT
1235 S.W. 87 AVE
MIAMI, FLORIDA 33174
TEL. (305) 264-8100 FAX. (305) 262-6978
COMP–ANL\W08–17GTE

SERIES–2047 ALUM CURTAIN WALL SYSTEM (L.M.I.)

GLASS TECH ENGINEERING INC.
8321 N.W. 70TH STREET
MIAMI, FL. 33166
TEL. (305) 594–4321 FAX. (305) 599–2730

revisions:			
no	date	by	description
A	07.09.08		REV. PER BCCO COMMENTS
B	08.26.08		REV. PER BCCO COMMENTS
C	04.20.12		NO CHANGE THIS SHEET

date: 02–18–08
scale: 3/16" = 1"
dr. by: HAMID
chk. by:

drawing no.
W08–17

sheet 8 of 19

CONCRETE AND METAL STRUCTURE NOT BY GLASSTECH MUST SUSTAIN LOADS IMPOSED BY GLAZING SYSTEM AND TRANSFER THEM TO THE BUILDING STRUCTURE.

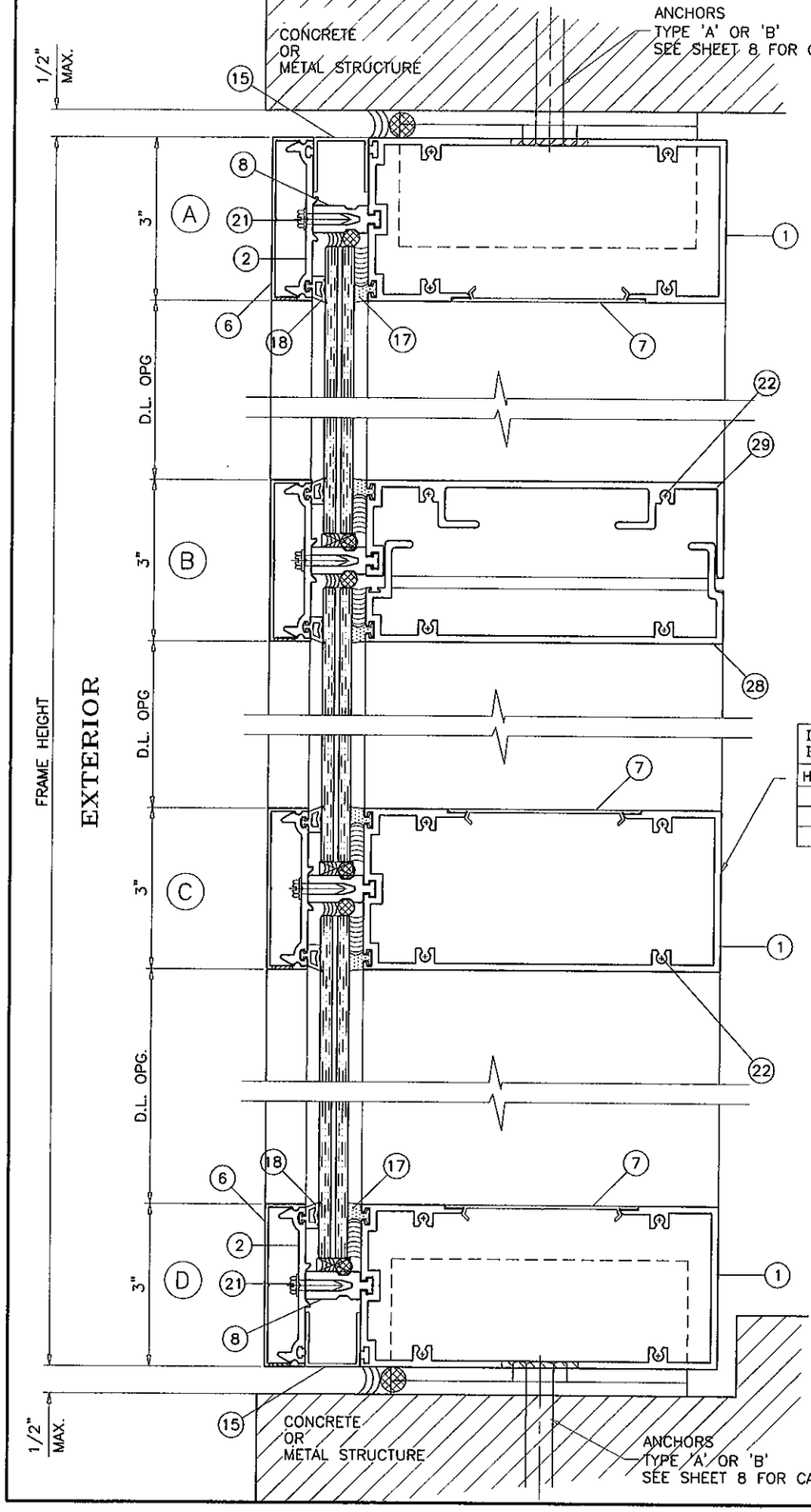

LIMIT MAX. DESIGN LOADS FOR HORIZONTAL AS FOLLOWS	
HORIZ. SPAN MAX.	DESIGN LOAD
60"	145 PSF
84"	133 PSF
86-5/8"	90 PSF

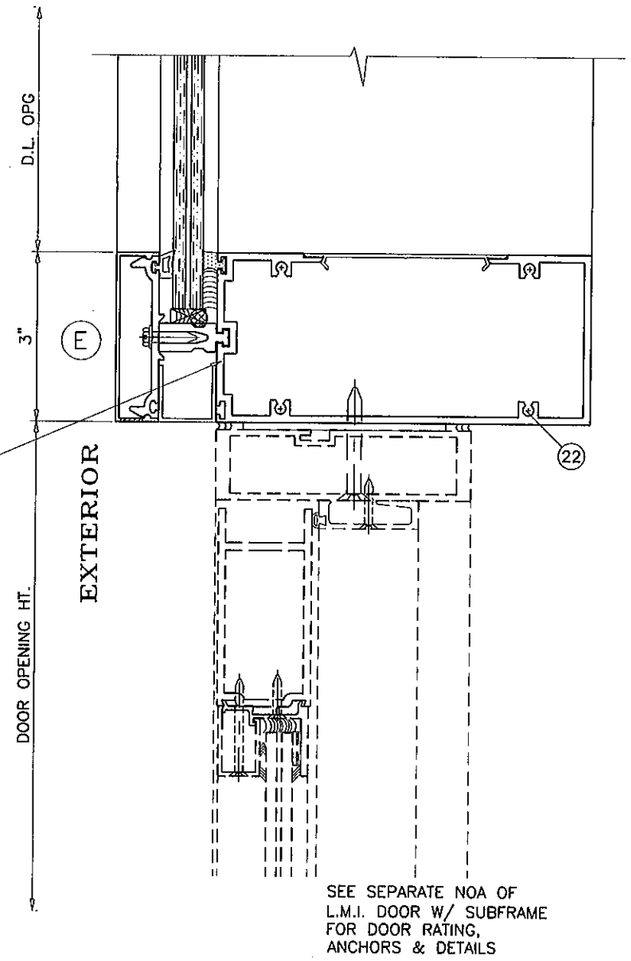

SEE SEPARATE NOA OF L.M.I. DOOR W/ SUBFRAME FOR DOOR RATING, ANCHORS & DETAILS

Engr: JAVAD AHMAD
CIVIL
FLA. PE # 70592
C.A.N. 3538

APR 25 2012

PRODUCT REVISED
as complying with the Florida Building Code
Acceptance No. 12-0514.16
Expiration Date 10/9/2013
By
Miami Dade Product Control

AL-FAROOQ CORPORATION
ENGINEERS & PRODUCT DEVELOPMENT
1235 S.W. 87 AVE
MIAMI, FLORIDA 33174
TEL. (305) 264-8100 FAX. (305) 262-6978
COMP-ANL\W08-17GTE

SERIES-2047 ALUM CURTAIN WALL SYSTEM (L.M.I.)

GLASS TECH ENGINEERING INC.
8321 N.W. 70TH STREET
MIAMI, FL. 33166
TEL. (305) 594-4321 FAX. (305) 599-2730

revisions:		
no	date	by description
A	07.09.08	REV. PER BCCO COMMENTS
B	08.28.08	NO CHANGE THIS SHEET
C	04.20.12	NO CHANGE THIS SHEET

date: 02-18-08
scale: 3/8" = 1"
dr. by: HAMID
chk. by:

drawing no.
W08-17

sheet 9 of 19

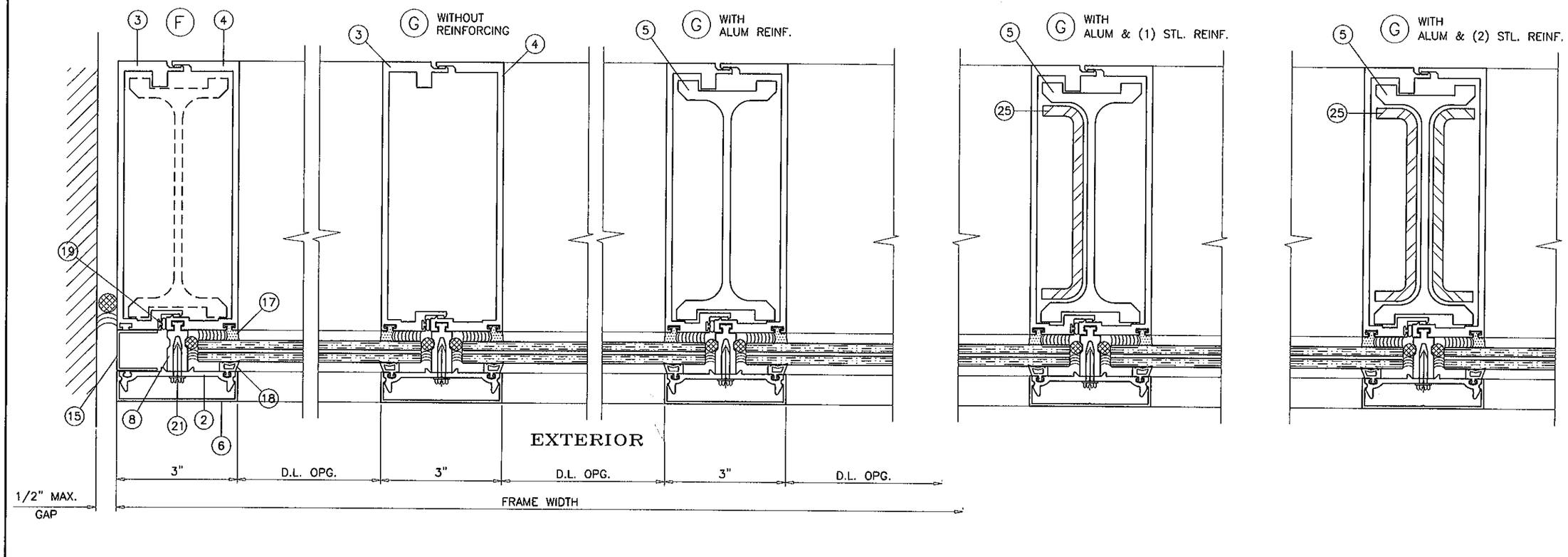

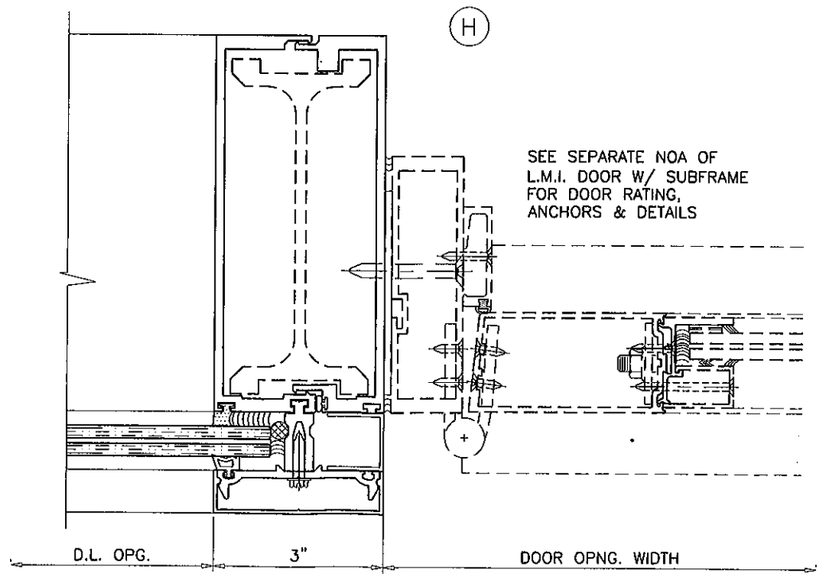

Engr: JAVAD AHMAD
CIVIL
FLA. PE # 70592
C.A.N. 3538

APR 25 2012

PRODUCT REVISED
as complying with the Florida Building Code
Acceptance No 12-0514.16
Expiration Date 10/9/2015
By
Miami Dade Product Control

afc

AL-FAROOQ CORPORATION
ENGINEERS & PRODUCT DEVELOPMENT
1235 S.W. 87 AVE
MIAMI, FLORIDA 33174
TEL. (305) 264-8100 FAX. (305) 262-6978
COMP-ANL\W08-17GTE

SERIES-2047 ALUM CURTAIN WALL SYSTEM (L.M.I.)

GLASS TECH ENGINEERING INC.
8321 N.W. 70TH STREET
MIAMI, FL. 33166
TEL. (305) 594-4321 FAX. (305) 599-2730

revisions:

no	date	by	description
A	07.09.08		REV. PER BCCO COMMENTS
B	08.28.08		NO CHANGE THIS SHEET
C	04.20.12		NO CHANGE THIS SHEET

date: 02-18-08
scale: 3/8" = 1"
dr. by: HAMID
chk. by:

drawing no.
W08-17

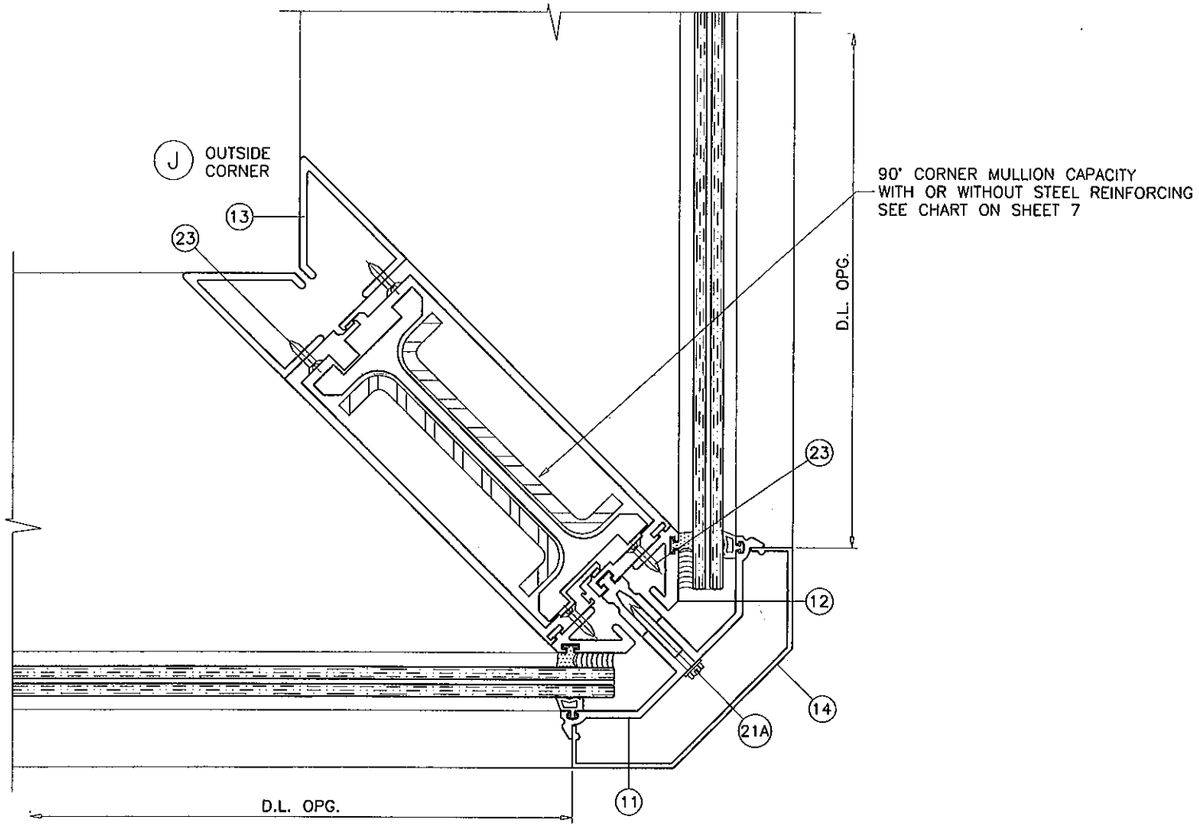

Engr: JAVAD AHMAD
CIVIL
FLA. PE # 70592
C.A.N. 3538

APR 25 2012

PRODUCT REVISED
as complying with the Florida Building Code
Acceptance No 12-0514.16
Expiration Date 10/9/2013
By
Miami Dade Product Control

AL-FAROOQ CORPORATION
ENGINEERS & PRODUCT DEVELOPMENT
1235 S.W. 87 AVE
MIAMI, FLORIDA 33174
TEL. (305) 264-8100 FAX. (305) 262-6978

COMP-ANL\W08-17GTE

SERIES-2047 ALUM CURTAIN WALL SYSTEM (L.M.I.)

GLASS TECH ENGINEERING INC.
8321 N.W. 70TH STREET
MIAMI, FL. 33166
TEL. (305) 594-4321 FAX. (305) 599-2730

revisions:

no	date	by	description
A	07.09.08		REV. PER BCCO COMMENTS
B	08.28.08		REV. PER BCCO COMMENTS
C	04.20.12		NO CHANGE THIS SHEET

date: 02-18-08
scale: 3/8" = 1"
dr. by: HAMID
chk. by:

drawing no.
W08-17

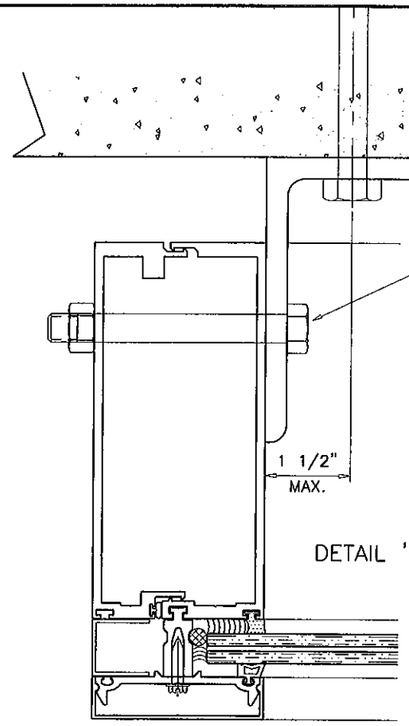

JAMB
ANCHOR TYPE '1'
WIND LOAD ≤ 1000 LBS
DEAD LOAD ≤ 165 LBS

$$\text{JAMB DEAD LOAD} = \frac{\text{FRAME WIDTH (FT.) X FRAME HT. (FT.)}}{2} \text{ X 11 PSF}$$

DETAIL '4A'

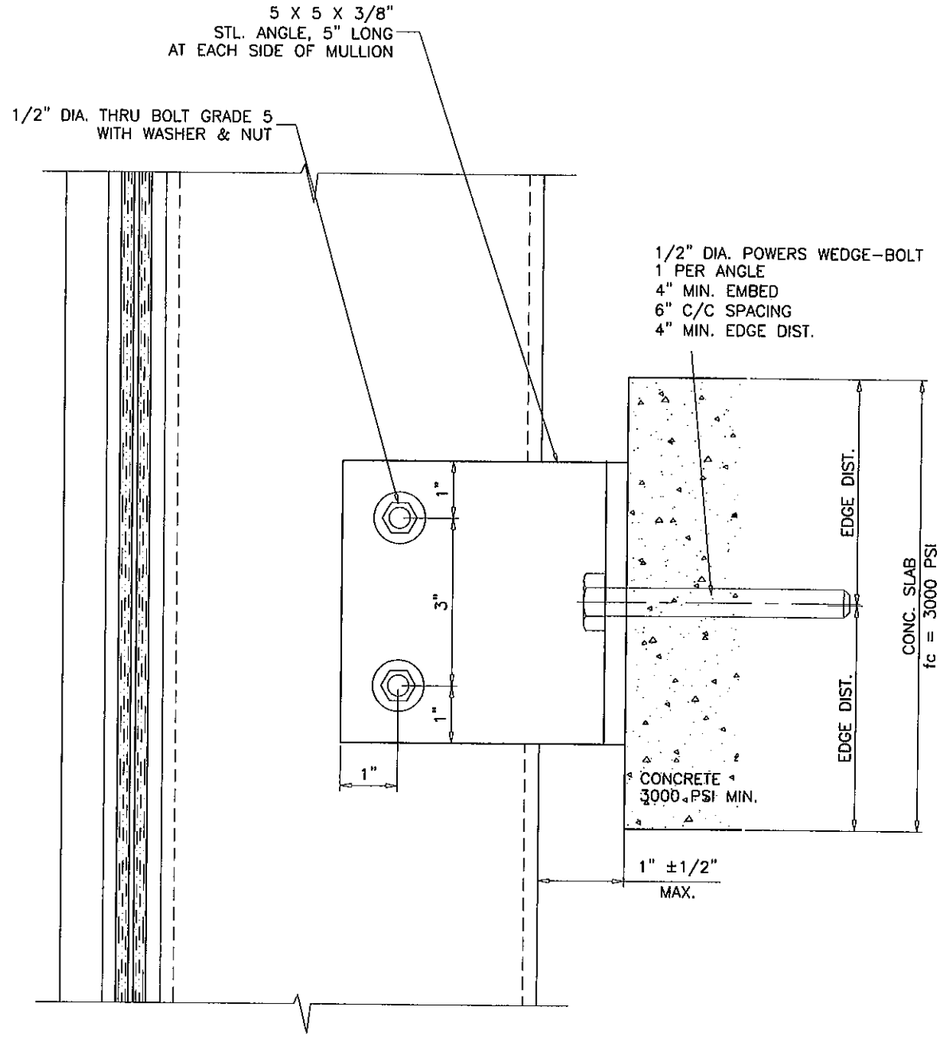

INTERMEDIATE ANCHORS
DETAIL '4'

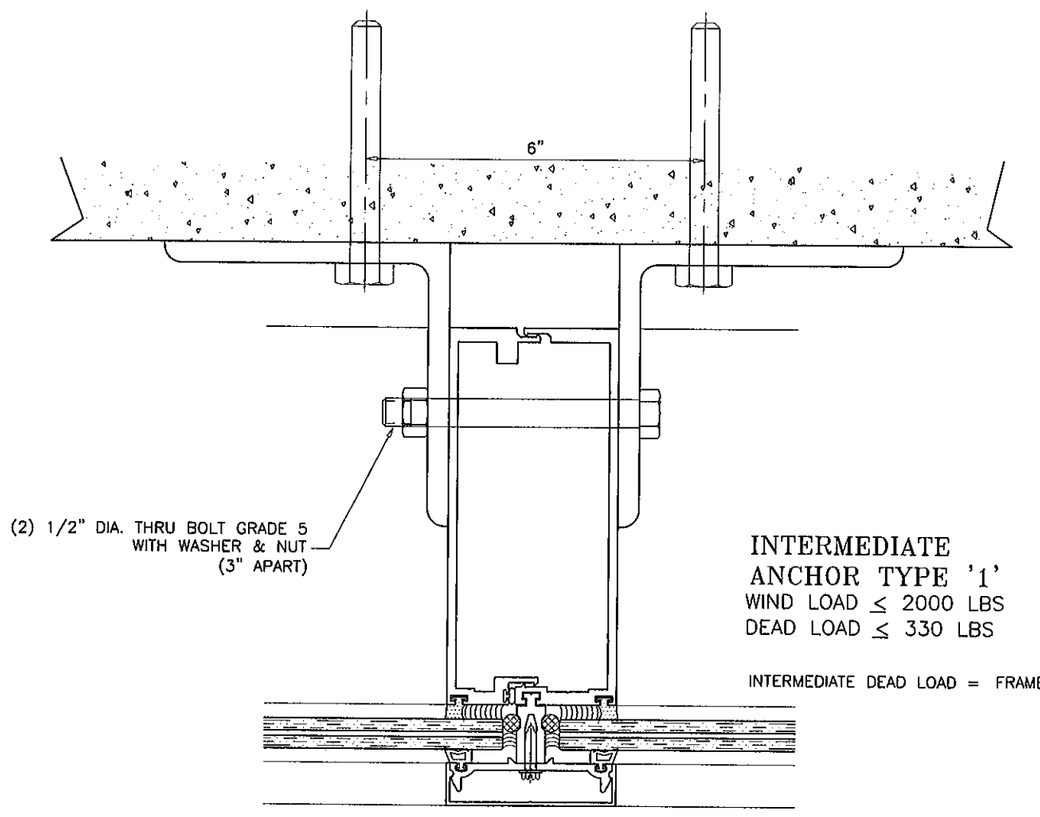

INTERMEDIATE
ANCHOR TYPE '1'
WIND LOAD ≤ 2000 LBS
DEAD LOAD ≤ 330 LBS

INTERMEDIATE DEAD LOAD = FRAME WIDTH (FT.) X FRAME HT. (FT.) X 11 PSF

ANCHORS INTO CONCRETE

WIND + DEAD LOAD ANCHOR

Engr: JAVAD AHMAD
CIVIL
FLA. PE # 70592
C.A.N. 3538

APR 25 2012

PRODUCT REVISED
as complying with the Florida Building Code
Acceptance No. 12-0514.16
Expiration Date 10/9/2013
By
Miami Dade Product Control

AL-FAROOQ CORPORATION
ENGINEERS & PRODUCT DEVELOPMENT
1235 S.W. 87 AVE
MIAMI, FLORIDA 33174
TEL (305) 264-8100 FAX. (305) 262-6978
COMP-ANL\W08-17GTE

SERIES-2047 ALUM CURTAIN WALL SYSTEM (L.M.I.)
GLASS TECH ENGINEERING INC.
8321 N.W. 70TH STREET
MIAMI, FL. 33166
TEL. (305) 594-4321 FAX. (305) 599-2730

revisions:			
no	date	by	description
A	07.09.08		REV. PER BCCO COMMENTS
B	08.28.08		NO CHANGE THIS SHEET
C	04.20.12		NO CHANGE THIS SHEET

date: 02-18-08
scale: 3/8" = 1"
dr. by: HAMID
chk. by:

drawing no.
W08-17

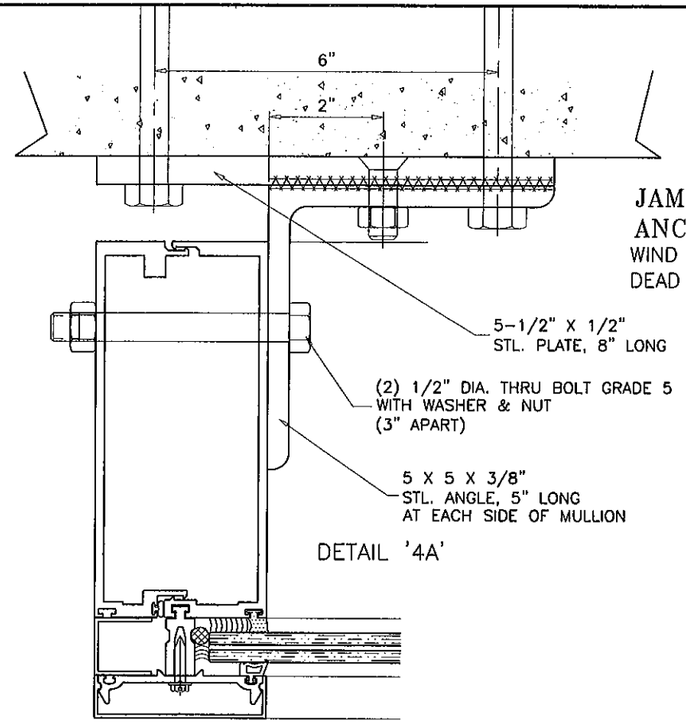

JAMB
ANCHOR TYPE '2'
WIND LOAD ≤ 2500 LBS
DEAD LOAD ≤ 330 LBS

DETAIL '4A'

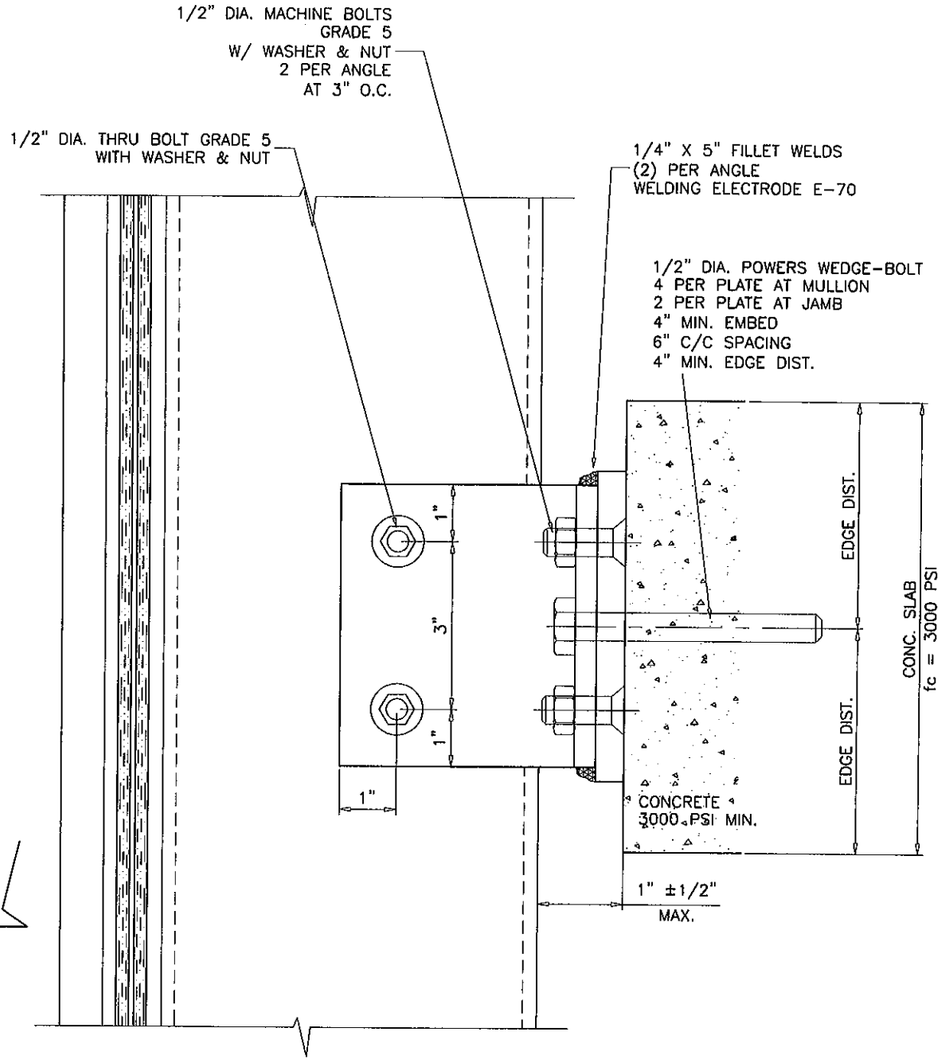

INTERMEDIATE ANCHORS
DETAIL '4'

ANCHORS INTO CONCRETE

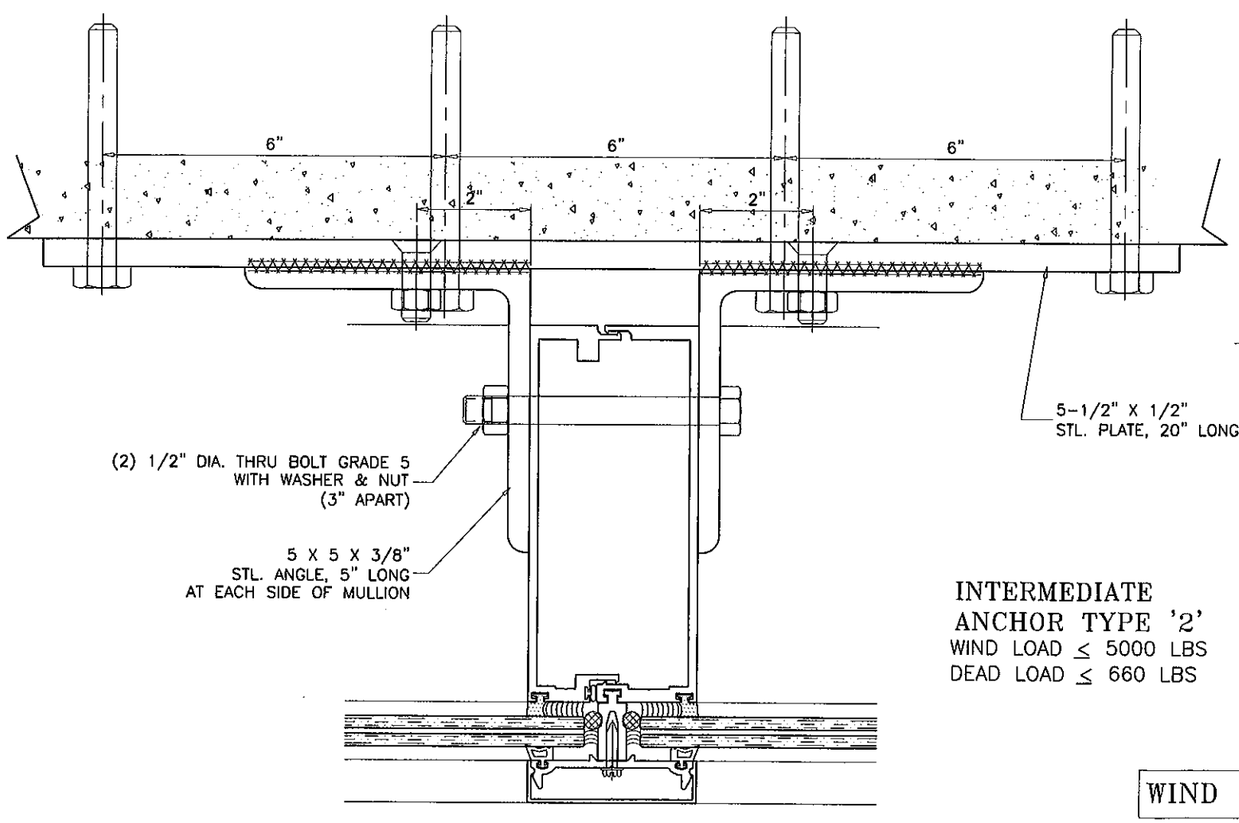

INTERMEDIATE
ANCHOR TYPE '2'
WIND LOAD ≤ 5000 LBS
DEAD LOAD ≤ 660 LBS

WIND + DEAD LOAD ANCHOR

Engr: JAVAD AHMAD
CIVIL
FLA. PE # 70592
C.A.N. 3538

APR 25 2012

PRODUCT REVISED
as complying with the Florida Building Code
Acceptance No. 12-0514.16
Expiration Date 10/9/2013
By Miami Dade Product Control

AL-FAROOQ CORPORATION
ENGINEERS & PRODUCT DEVELOPMENT
1235 S.W. 87 AVE
MIAMI, FLORIDA 33174
TEL. (305) 264-8100 FAX. (305) 262-6978
COMP-ANL\W08-17GTE

GLASS TECH ENGINEERING INC.
8321 N.W. 70TH STREET
MIAMI, FL. 33166
TEL. (305) 594-4321 FAX. (305) 599-2730

SERIES-2047 ALUM CURTAIN WALL SYSTEM (L.M.I.)

revisions:		
no	date	by description
A	07.09.08	REV. PER BCCO COMMENTS
B	08.28.08	REV. PER BCCO COMMENTS
C	04.20.12	NO CHANGE THIS SHEET

date: 02-18-08
scale: 3/8" = 1"
dr. by: HAMID
chk. by:

drawing no.
W08-17

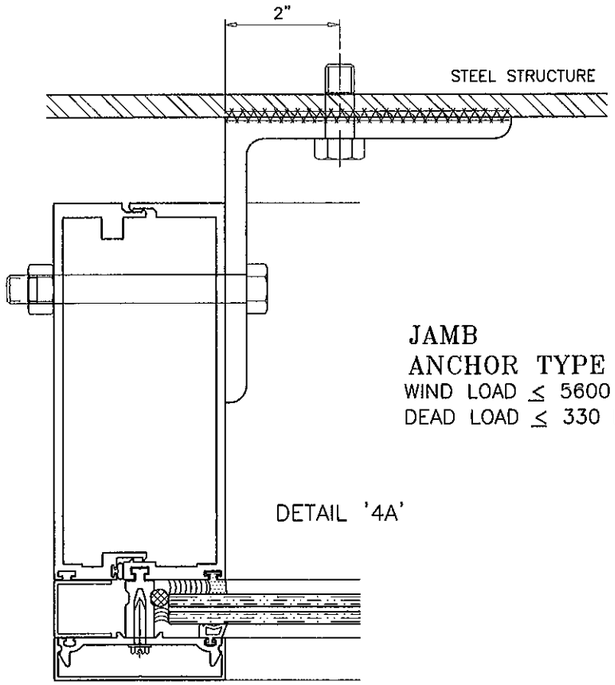

JAMB
ANCHOR TYPE 3
WIND LOAD ≤ 5600 LBS
DEAD LOAD ≤ 330 LBS

DETAIL '4A'

ALL WELDS = 1/4" FILLET, WELDING ELECTRODE E-70
EMBEDED STEEL STUD IS NOT PART OF THIS APPROVAL.

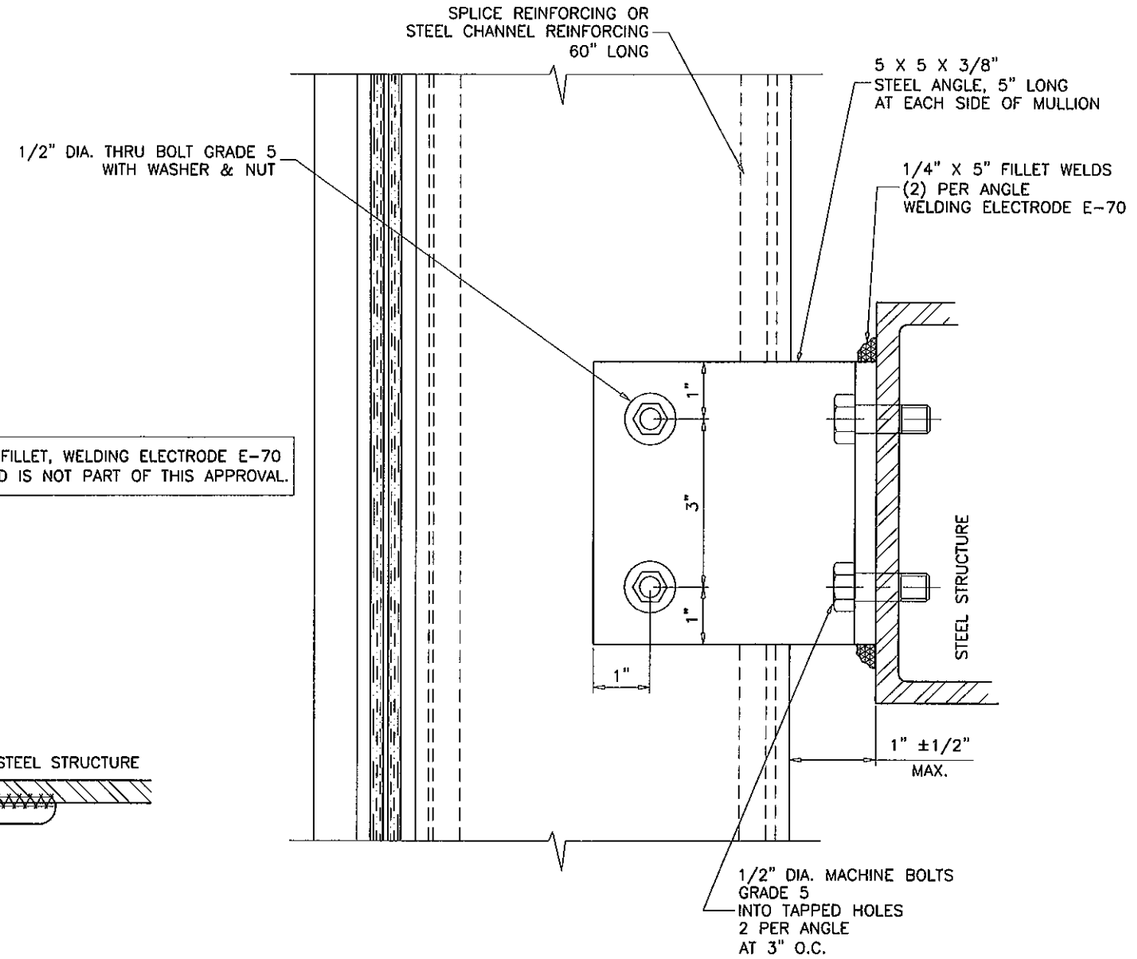

INTERMEDIATE ANCHORS
DETAIL '4' (ALT.)

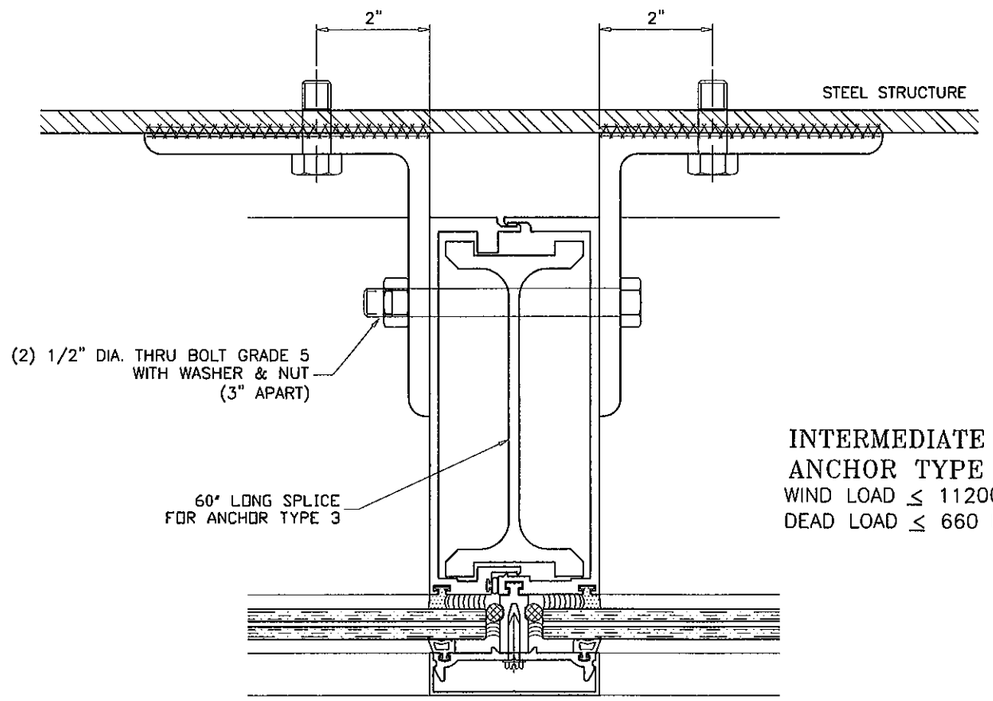

INTERMEDIATE
ANCHOR TYPE 3
WIND LOAD ≤ 11200 LBS
DEAD LOAD ≤ 660 LBS

ANCHORS INTO METAL STRUCTURES
COMMERCIAL STEEL – 1/4" MIN. THICKNESS

WIND + DEAD LOAD ANCHOR

Engr: JAVAD AHMAD
CIVIL
FLA. PE # 70592
C.A.N. 3538

APR 25 2012

PRODUCT REVISED
as complying with the Florida Building Code
Acceptance No 12-0514.16
Expiration Date 10/9/2013
By
Miami Dade Product Control

AL-FAROOQ CORPORATION
ENGINEERS & PRODUCT DEVELOPMENT
1235 S.W. 87 AVE
MIAMI, FLORIDA 33174
TEL. (305) 264-8100 FAX. (305) 262-6978
COMP-ANL\W08-17GTE

SERIES-2047 ALUM CURTAIN WALL SYSTEM (L.M.I.)

GLASS TECH ENGINEERING INC.
8321 N.W. 70TH STREET
MIAMI, FL. 33166
TEL. (305) 594-4321 FAX. (305) 599-2730

revisions:		
no	date	by description
A	07.09.09	REV. PER BCCO COMMENTS
B	08.28.08	REV. PER BCCO COMMENTS
C	04.20.12	NO CHANGE THIS SHEET

date: 02-18-08 | scale: 3/8" = 1" | dr. by: HAMID | chk. by:

drawing no.
W08-17

INTERMEDIATE
ANCHOR
WIND LOAD ≤ 2500 LBS (EACH SIDE)
DEAD LOAD ≤ 330 LBS (EACH SIDE)

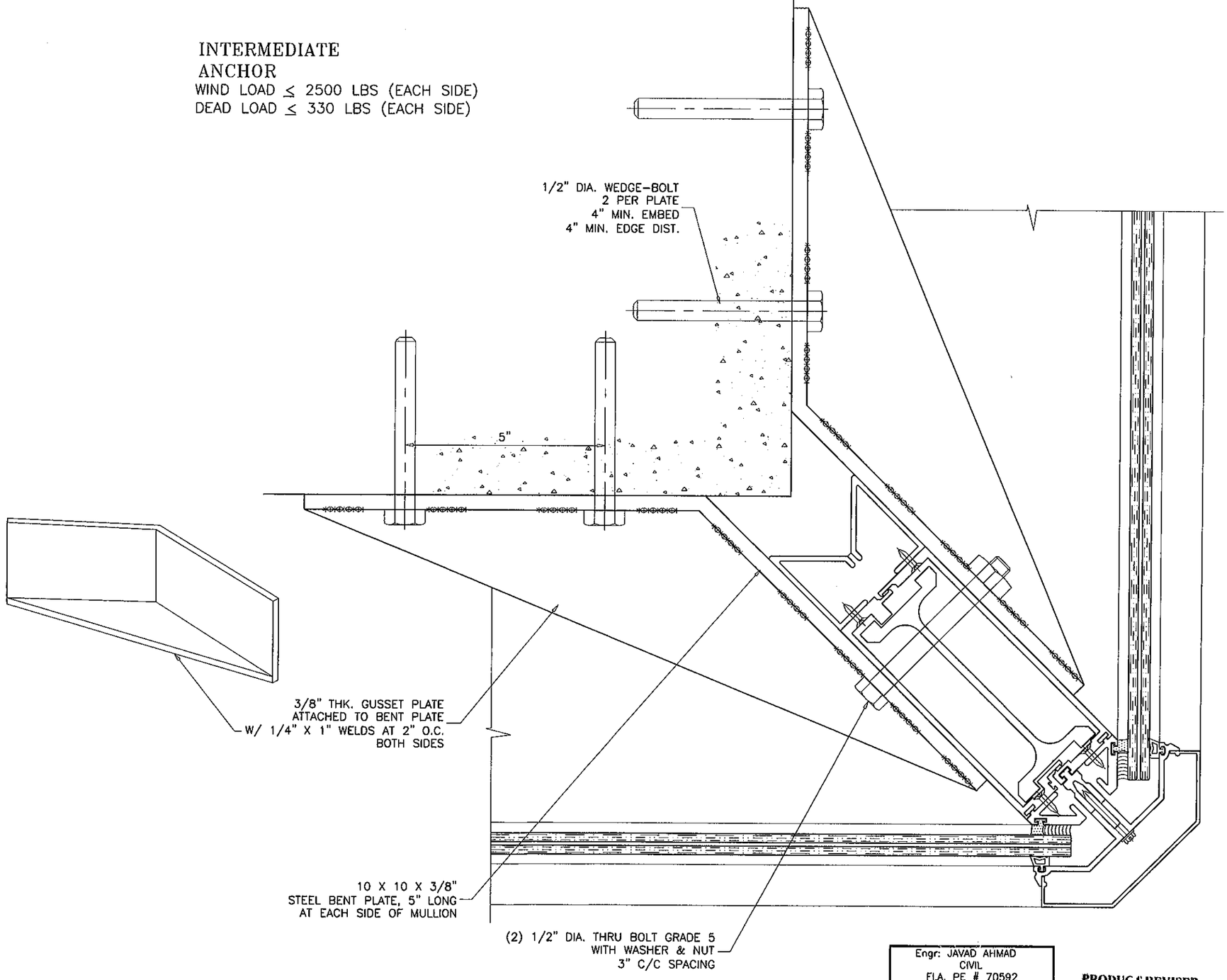

CORNER MULLION ANCHORS
DEATIL '5'

ANCHORS INTO CONCRETE

WIND + DEAD LOAD ANCHOR

Engr: JAVAD AHMAD
CIVIL
FLA. PE # 70592
C.A.N. 3538
APR 25 2012

PRODUCT REVISED
as complying with the Florida
Building Code
Acceptance No 12-05/4.16
Expiration Date 10/9/2013
By
Miami Dade Product Control

APR 25 2012

AL-FAROOQ CORPORATION
ENGINEERS & PRODUCT DEVELOPMENT
1235 S.W. 87 AVE
MIAMI, FLORIDA 33174
TEL. (305) 264-8100 FAX. (305) 262-6978
COMP-ANL\W08-17GTE

SERIES-2047 ALUM CURTAIN WALL SYSTEM (L.M.I.)

GLASS TECH ENGINEERING INC.
8321 N.W. 70TH STREET
MIAMI, FL. 33166
TEL. (305) 594-4321 FAX. (305) 599-2730

revisions:			
no	date	by	description
A	07.09.08		REV. PER BCCO COMMENTS
B	08.28.08		REV. PER BCCO COMMENTS
C	04.20.12		NO CHANGE THIS SHEET

date: 02-18-08
scale: 3/8" = 1"
dr. by: HAMID
chk. by:

drawing no.
W08-17

INTERMEDIATE
ANCHOR
WIND LOAD ≤ 3522 LBS (EACH SIDE)
DEAD LOAD ≤ 330 LBS (EACH SIDE)

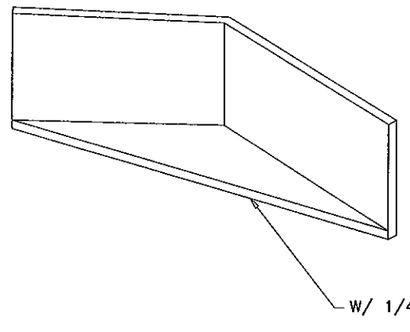

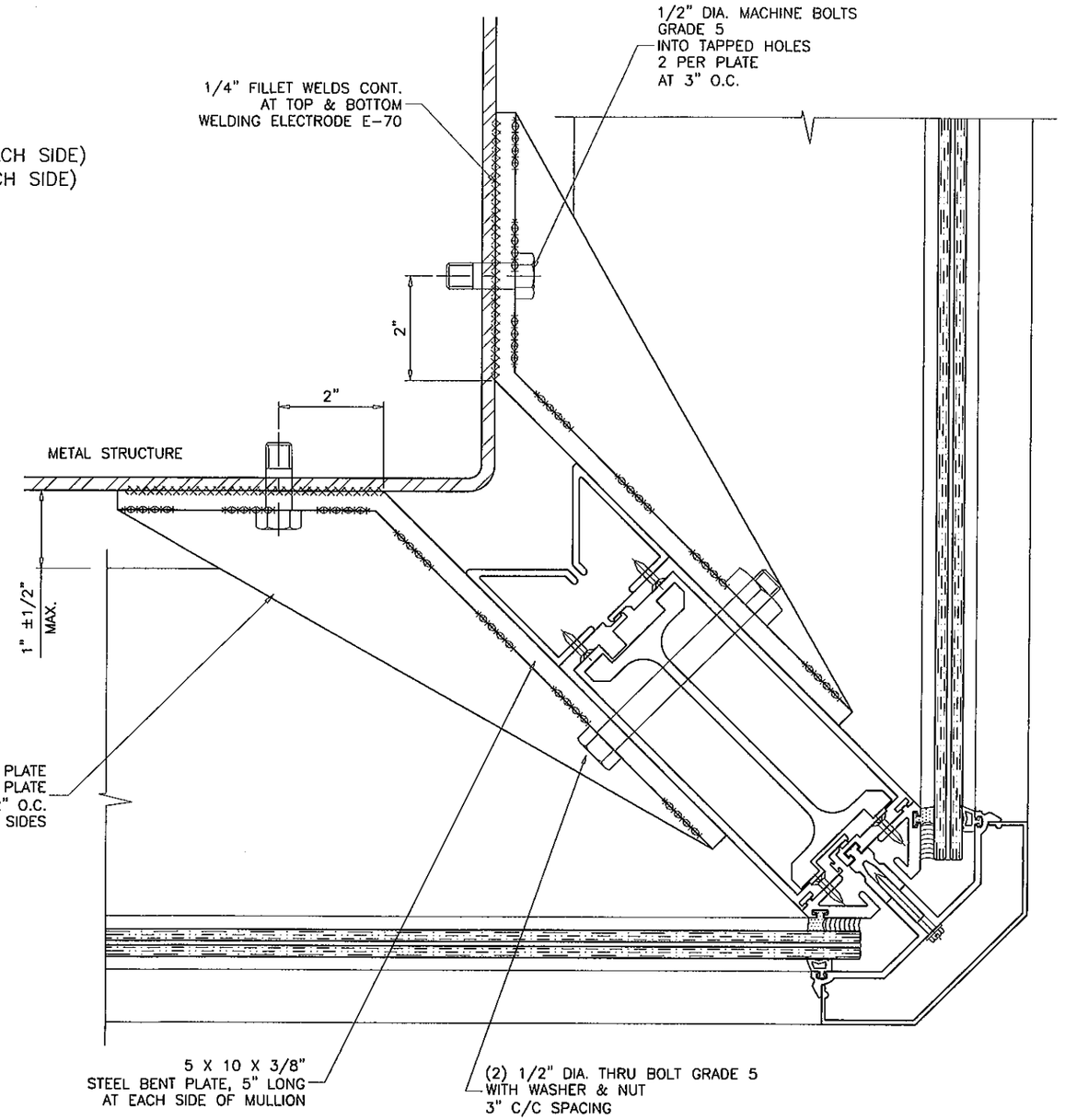

ALL WELDS = 1/4" FILLET, WELDING ELECTRODE E-70
EMBEDED STEEL STUD IS NOT PART OF THIS APPROVAL.

CORNER MULLION ANCHORS
DETAIL '8' (ALT.)

ANCHORS INTO METAL STRUCTURES
COMMERCIAL STEEL – 1/4" MIN. THICKNESS

WIND + DEAD LOAD ANCHOR

Engr: JAVAD AHMAD
CIVIL
FLA. PE # 70592
C.A.N. 3538
APR 25 2012

PRODUCT REVISED
as complying with the Florida Building Code
Acceptance No. 12-0514.16
Expiration Date 10/9/2012
By
Miami Dade Product Control

AL-FAROOQ CORPORATION
ENGINEERS & PRODUCT DEVELOPMENT
1235 S.W. 87 AVE
MIAMI, FLORIDA 33174
TEL (305) 264-8100 FAX. (305) 262-6978

COMP-ANL\W08-17GTE

SERIES-2047 ALUM CURTAIN WALL SYSTEM (L.M.I.)

GLASS TECH ENGINEERING INC.
8321 N.W. 70TH STREET
MIAMI, FL. 33166
TEL. (305) 594-4321 FAX. (305) 599-2730

revisions:			
no	date	by	description
A	07.09.08		REV. PER BCCO COMMENTS
B	08.28.08		REV. PER BCCO COMMENTS
C	04.20.12		NO CHANGE THIS SHEET

date: 02-18-08
scale: 3/8" = 1"
dr. by: HAMID
chk. by:

drawing no.
W08-17

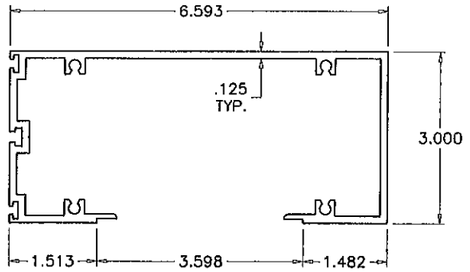

① FRAME HEAD/SILL/HORIZONTAL

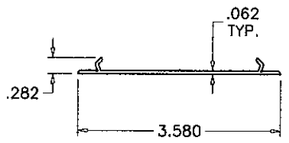

⑦ INTERIOR SNAP COVER

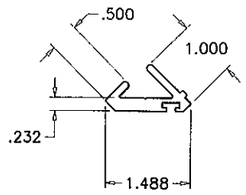

⑫ CORNER EXT. ADAPTER

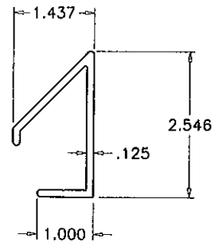

⑬ CORNER INT. ADAPTER

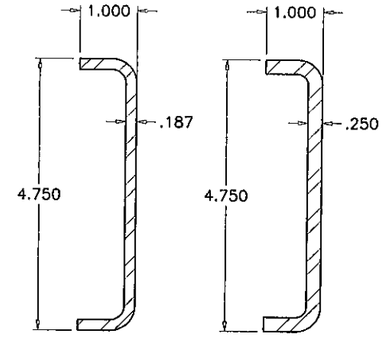

㉕ Fy=46 KSI Fy=46 KSI ㉖

REINFORCING CHANNELS

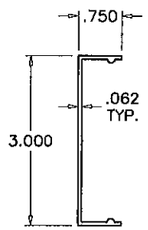

⑥ EXTERIOR SNAP COVER

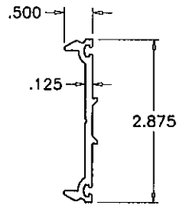

② PRESSURE PLATE

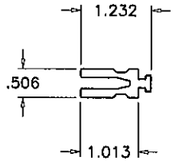

⑧ GLAZING ADAPTER

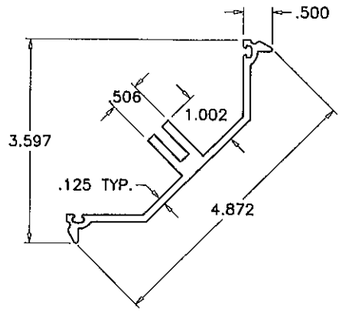

⑪ CORNER PRESSURE PLATE

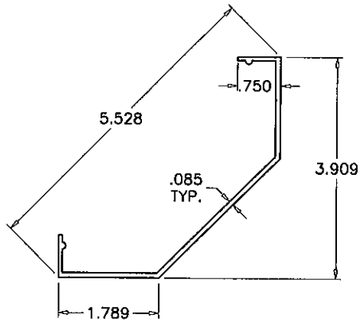

⑭ CORNER SNAP COVER

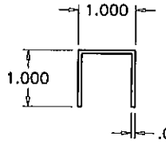

⑮ FILLER CHANNEL

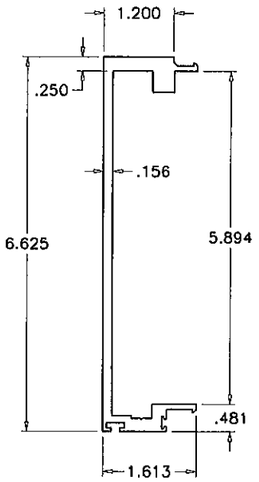

③ MALE MULLION

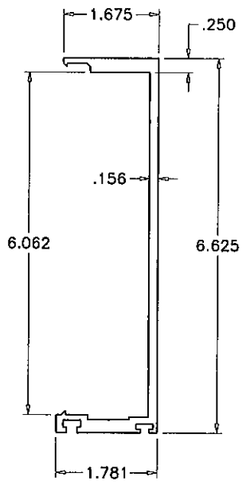

④ FEMALE MULLION

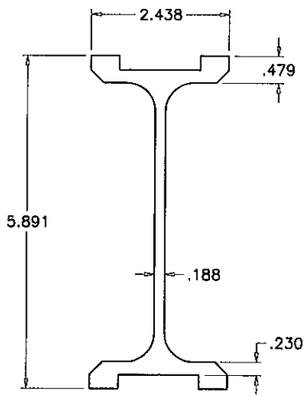

⑤ SPLICE/STIFFENER

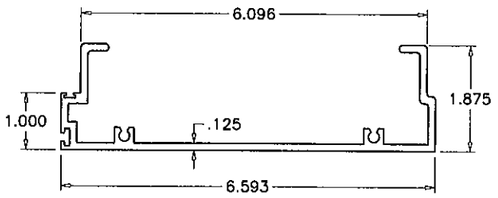

㉘ MALE INTERMEDIATE HORIZONTAL

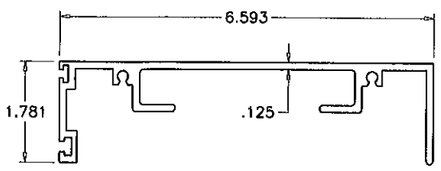

㉙ FEMALE INTERMEDIATE HORIZONTAL

Engr: JAVAD AHMAD
CIVIL
FLA. PE # 70592
C.A.N. 3538

APR 25 2012

PRODUCT REVISED
as complying with the Florida Building Code
Acceptance No 12-0514.16
Expiration Date 10/9/2013
By
Miami Dade Product Control

AL-FAROOQ CORPORATION
ENGINEERS & PRODUCT DEVELOPMENT
1235 S.W. 87 AVE
MIAMI, FLORIDA 33174
TEL. (305) 264-8100 FAX. (305) 262-6978
COMP-ANL\W08-17GTE

SERIES-2047 ALUM CURTAIN WALL SYSTEM (L.M.I.)

GLASS TECH ENGINEERING INC.
8321 N.W. 70TH STREET
MIAMI, FL. 33166
TEL. (305) 594-4321 FAX. (305) 599-2730

revisions:			
no	date	by	description
A	07.09.08		REV. PER BCCO COMMENTS
B	08.28.08		NO CHANGE THIS SHEET
C	04.20.12		NO CHANGE THIS SHEET

date: 02-18-08
scale: 3/8" = 1"
dr. by: HAMID
chk. by:

drawing no.
W08-17

sheet 17 of 19

ITEM NO.	PART NO.	QUANTITY	DESCRIPTION	MATERIAL	MANF./SUPPLIER/REMARKS
1	GT-700	AS REQD.	FRAME HEAD/SILL/HORIZONTAL	6063-T6	-
2	GT-712	AS REQD.	PRESSURE PLATE	6063-T5	-
3	GT-705	AS REQD.	MALE MULLION	6063-T6	-
4	GT-706	AS REQD.	FEMALE MULLION	6063-T6	-
5	GT-707	AS REQD.	SPLICE/STIFFENER	6105-T5	-
6	GT-713	AS REQD.	EXTERIOR SNAP COVER	6063-T5	-
7	GT-701	AS REQD.	INTERIOR SNAP COVER	6063-T5	-
8	GT-702	AS REQD.	GLAZING ADAPTER	6063-T6	-
9	GT-715	AS REQD.	'F' ANCHOR	6105-T5	-
9A	-	AS REQD.	ALT. 'F' ANCHOR	6105-T5	-
10	GT-714	AS REQD.	'T' ANCHOR	6105-T5	-
10A	-	AS REQD.	ALT. 'T' ANCHOR	6105-T5	-
11	GT-710	AS REQD.	CORNER PRESSURE PLATE	6063-T5	-
12	GT-709	AS REQD.	CORNER EXTERIOR ADAPTER	6063-T5	-
13	GT-708	AS REQD.	CORNER INTERIOR ADAPTER	6063-T5	-
14	GT-711	AS REQD.	CORNER SNAP COVER	6063-T5	-
15	-	AS REQD.	FILLER CHANNEL	6063-T5	-
17	6700-01-00	AS REQD.	INTERIOR GLAZING GASKET	EPDM	EXTRUDED POLYMERS
18	6699-01-00	AS REQD.	EXTERIOR GLAZING GASKET	EPDM	EXTRUDED POLYMERS
19	-	AS REQD.	BULB VINYL	SOFT PVC	-
21	1/4-20 X 5/8"	AS REQD.	PRESSURE PLATE SCREWS	ZINC PLATED ST.	HEX HEAD MS, AT 1-1/2" FROM ENDS & 9" O.C. MAX.
21A	1/4-20 X 1-1/2"	AS REQD.	PRESSURE PLATE SCREWS AT 90° CORNERS	ZINC PLATED ST.	HEX HEAD MS, AT 1-1/2" FROM ENDS & 9" O.C. MAX.
22	#12 X 1-1/2"	4/ CORNER	FRAME ASSEMBLY SCREWS	ZINC PLATED ST.	HEX HEAD SELF DRILLING
23	#8 X 3/4"	AS REQD.	INTERIOR/EXTERIOR ADAPTER SCREWS	ZINC PLATED ST.	FH SELF DRILLING, AT 9" O.C.
25	-	AS REQD.	REINFORCING CHANNEL	STEEL	4-3/4" X 1" X 3/16"
26	-	AS REQD.	REINFORCING CHANNEL	STEEL	4-3/4" X 1" X 1/4"
28	GT-704	AS REQD.	MALE INTERMEDIATE HORIZONTAL	6063-T6	-
29	GT-703	AS REQD.	FEMALE INTERMEDIATE HORIZONTAL	6063-T6	-

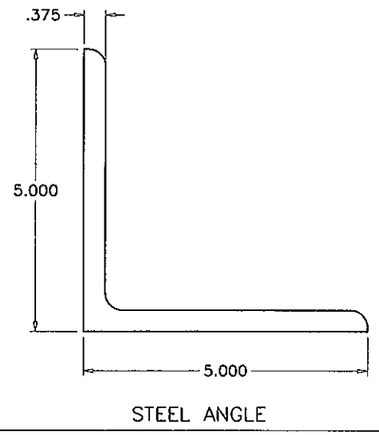

STEEL ANGLE

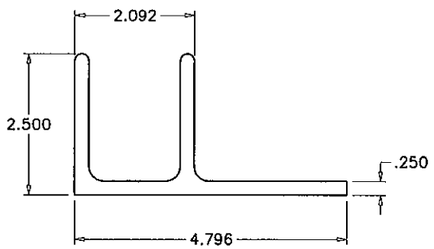

(9) 'F' ANCHOR

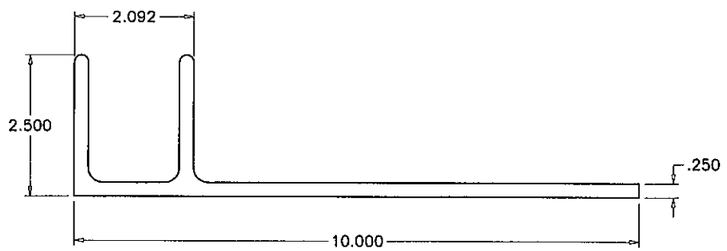

(9A) 'F' ANCHOR

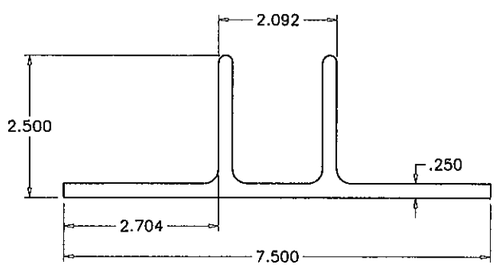

(10) 'T' ANCHOR

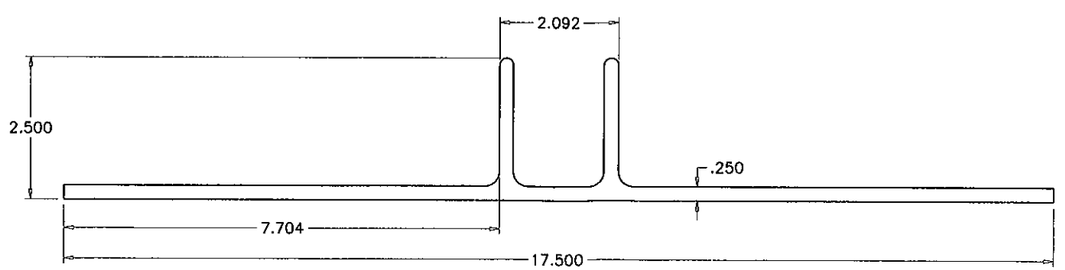

(10A) 'T' ANCHOR

Engr: JAVAD AHMAD
CIVIL
FLA. PE # 70592
C.A.N. 3538

APR 25 2012

PRODUCT REVISED
as complying with the Florida
Building Code
Acceptance No 12-0514.16
Expiration Date 10/9/2013
By
Miami Dade Product Control

AL-FAROOQ CORPORATION
ENGINEERS & PRODUCT DEVELOPMENT
1235 S.W. 87 AVE
MIAMI, FLORIDA 33174
TEL. (305) 264-8100 FAX. (305) 262-6978

COMP-ANL\W08-17GTE

SERIES-2047 ALUM CURTAIN WALL SYSTEM (L.M.I.)

GLASS TECH ENGINEERING INC.
8321 N.W. 70TH STREET
MIAMI, FL. 33166
TEL. (305) 599-2730 FAX. (305) 594-4321

revisions:

no	date	by	description
A	07.09.06		REV. PER BCCO COMMENTS
B	08.28.08		REV. PER BCCO COMMENTS
C	04.20.12		UPDATED TO 2010 FBC

date: 02-18-08
scale: 3/8" = 1"
dr. by: HAMID
chk. by:

drawing no.
W08-17

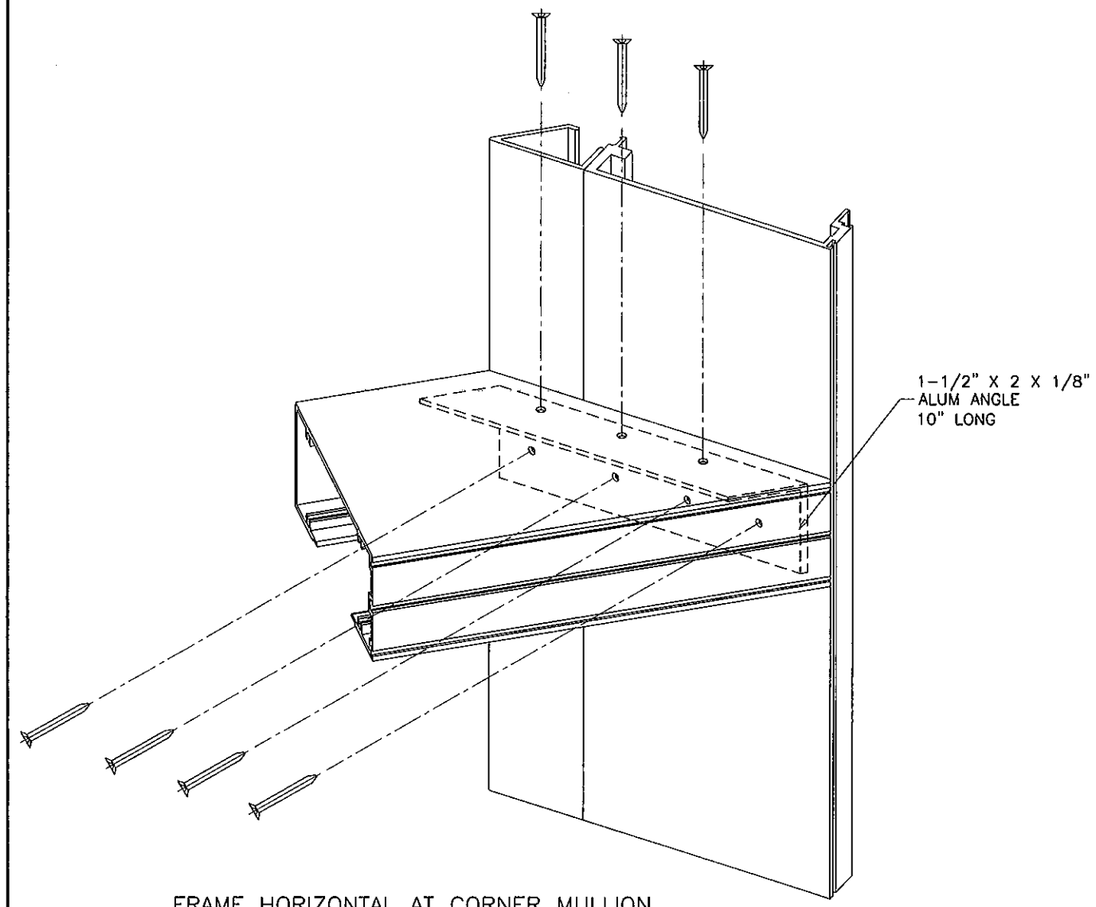

FRAME HORIZONTAL AT CORNER MULLION

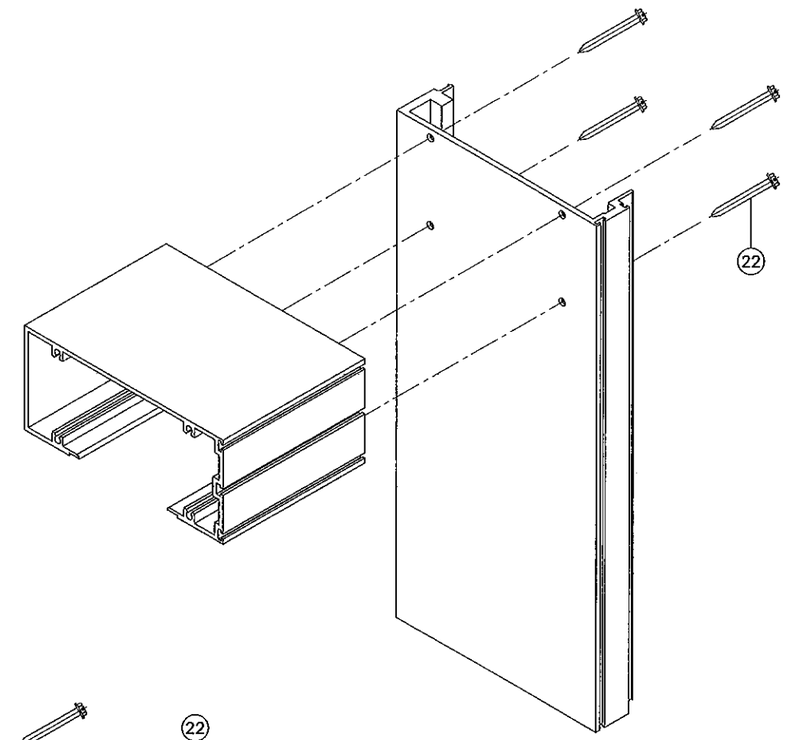

FRAME TOP/BOTTOM CORNER

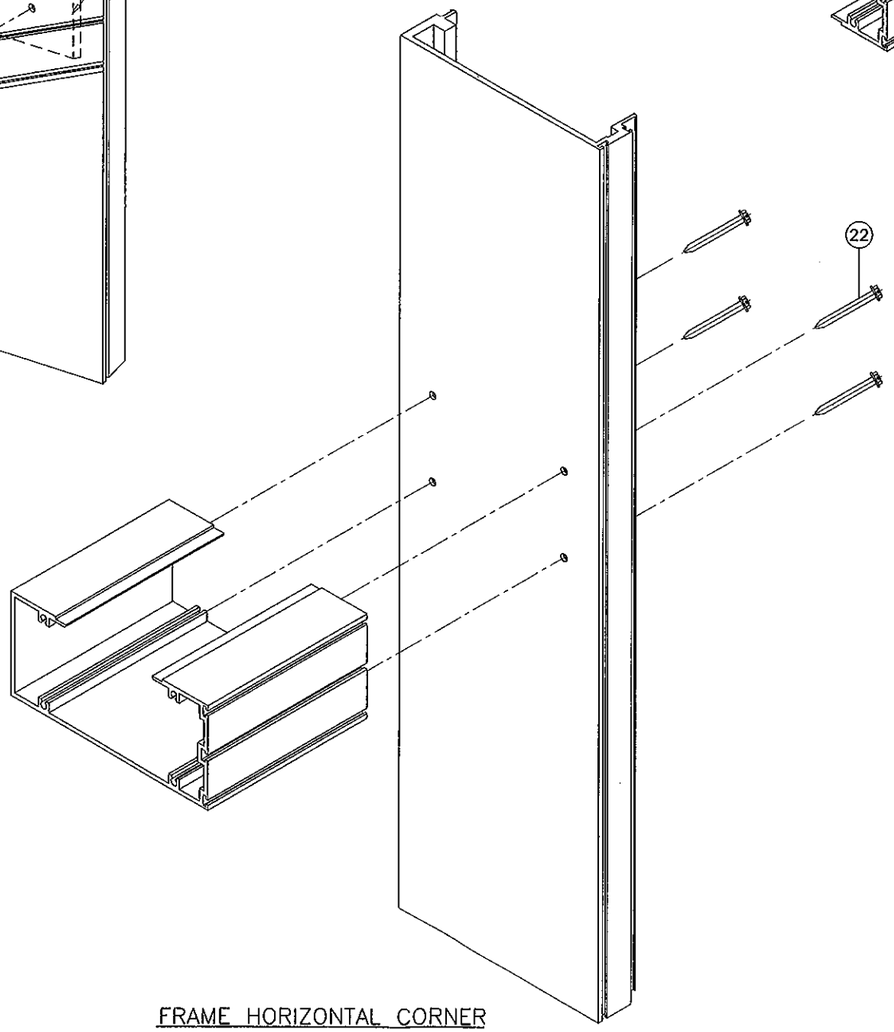

FRAME HORIZONTAL CORNER

PRODUCT CONTROL SECTION
COMPLIANCE DEPARTMENT
BUILDING CODE
15 MAY 10 AM 9:00
RECEIVED

Engr: JAVAD AHMAD
CIVIL
FLA. PE # 70592
C.A.N. 3538

APR 25 2012

PRODUCT REVISED
as complying with the Florida
Building Code
Acceptance No 12-0514.16
Expiration Date 10/9/2013
By
Miami Dade Product Control

AL-FAROOQ CORPORATION
ENGINEERS & PRODUCT DEVELOPMENT
1235 S.W. 87 AVE
MIAMI, FLORIDA 33174
TEL. (305) 264-8100 FAX. (305) 262-6978

COMP-ANL\W08-17GTE

SERIES-2047 ALUM CURTAIN WALL SYSTEM (L.M.I.)

GLASS TECH ENGINEERING INC.
8321 N.W. 70TH STREET
MIAMI, FL. 33166
TEL. (305) 594-4321 FAX. (305) 599-2730

revisions:

no	date	by	description
A	07.09.08		REV. PER BCCO COMMENTS
B	08.28.08		NO CHANGE THIS SHEET
C	04.20.12		NO CHANGE THIS SHEET

date: 02-18-08
scale: 3/8" = 1"
dr. by: HAMID
chk. by:

drawing no.
W08-17