MIAMI-DADE COUNTY
DEPARTMENT OF PERMITTING, ENVIRONMENT, AND REGULATORY AFFAIRS (PERA)
BOARD AND CODE ADMINISTRATION DIVISION

MIAMI–DADE COUNTY, FLORIDA
PRODUCT CONTROL SECTION
11805 SW 26 Street, Room 208
Miami, Florida 33175–2474
T (786) 315–2590 F (786) 315–2599
www.miamidade.gov/pera/

NOTICE OF ACCEPTANCE (NOA)

Crawford Tracey Corporation
3301 SW 13th Drive
Deerfield Beach, FL 33442

SCOPE:

This NOA is being issued under the applicable rules and regulations governing the use of construction materials. The documentation submitted has been reviewed and accepted by Miami–Dade County PERA–Product Control Section to be used in Miami–Dade County and other areas where allowed by the Authority Having Jurisdiction (AHJ).

This NOA shall not be valid after the expiration date stated below. The Miami–Dade County Product Control Section (In Miami–Dade County) and/or the AHJ (in areas other than Miami–Dade County) reserve the right to have this product or material tested for quality assurance purposes. If this product or material fails to perform in the accepted manner, the manufacturer will incur the expense of such testing and the AHJ may immediately revoke, modify, or suspend the use of such product or material within their jurisdiction. PERA reserves the right to revoke this acceptance, if it is determined by Miami–Dade County Product Control Section that this product or material fails to meet the requirements of the applicable building code.

This product is approved as described herein, and has been designed to comply with the Florida Building Code, including the High Velocity Hurricane Zone.

DESCRIPTION: Series "Pro–Tech 45" Aluminum Window Wall System – S.M.I.

APPROVAL DOCUMENT: Drawing No. **W04–70,** titled "Pro-Tech 45 Alum. Window Wall System (S.M.I.)", sheets 1 through 8 of 8, dated 08/06/04 with revision "**D**" dated 03/05/12, prepared by Al–Farooq Corporation, signed and sealed by Javad Ahmad, P. E., bearing the Miami–Dade County Product Control Section Revision Stamp with the Notice of Acceptance Number and expiration date by the Miami–Dade County Product Control Section.

MISSILE IMPACT RATING: Small Missile Impact Resistant

LABELING: Each unit shall bear a permanent label with the manufacturer's name or logo, city, state, series, and following statement: "Miami–Dade County Product Control Approved", unless otherwise noted herein.

RENEWAL of this NOA shall be considered after a renewal application has been filed and there has been no change in the applicable building code negatively affecting the performance of this product.

TERMINATION of this NOA will occur after the expiration date or if there has been a revision or change in the materials, use, and/or manufacture of the product or process. Misuse of this NOA as an endorsement of any product, for sales, advertising or any other purposes shall automatically terminate this NOA. Failure to comply with any section of this NOA shall be cause for termination and removal of NOA.

ADVERTISEMENT: The NOA number preceded by the words Miami–Dade County, Florida, and followed by the expiration date may be displayed in advertising literature. If any portion of the NOA is displayed, then it shall be done in its entirety.

INSPECTION: A copy of this entire NOA shall be provided to the user by the manufacturer or its distributors and shall be available for inspection at the job site at the request of the Building Official.

This NOA **revises NOA No. 09–0720.10** and consists of this page 1, evidence pages E–1 and E–2, as well as approval document mentioned above.

The submitted documentation was reviewed by **Jaime D. Gascon, P. E.**

MIAMI-DADE COUNTY APPROVED

J. Gascon
7/12/12

NOTICE OF ACCEPTANCE: EVIDENCE SUBMITTED

A. DRAWINGS

1. Manufacturer's die drawings and sections.
   (Submitted under previous NOA No. 04–0908.04)
2. Drawing No. **W04–70,** titled "Pro-Tech 45 Alum. Window Wall System (S.M.I.)", sheets 1 through 8 of 8, dated 08/06/04 with revision "**D**" dated 03/05/12, prepared by Al–Farooq Corporation, signed and sealed by Javad Ahmad, P. E.

B. TESTS

1. Test reports on: 1) Air Infiltration Test, per FBC, TAS 202–94
   2) Uniform Static Air Pressure Test, Loading per FBC TAS 202–94
   3) Water Resistance Test, per FBC, TAS 202–94
   4) Small Missile Impact Test per FBC, TAS 201–94
   5) Cyclic Wind Pressure Loading per FBC, TAS 203–94

   along with marked–up drawings and installation diagram of an aluminum window wall system, prepared by American Test Lab of South Florida, Test Report No. **ATL–0717.01–03**, dated 03/17/04, signed and sealed by William R. Mehner, P. E.
   (Submitted under previous NOA No.04–0908.04)
2. Test reports on: 1) Air Infiltration Test, per FBC, TAS 202–94
   2) Uniform Static Air Pressure Test, Loading per FBC TAS 202–94
   3) Water Resistance Test, per FBC, TAS 202–94
   4) Large Missile Impact Test per FBC, TAS 201–94
   5) Cyclic Wind Pressure Loading per FBC, TAS 203–94

   along with marked–up drawings and installation diagram of an aluminum window wall system, prepared by American Test Lab of South Florida, Test Report No. **ATL–0112.01–04**, dated 03/10/04, signed and sealed by William R. Mehner, P. E.
   (Submitted under previous NOA No.04–0908.04)

C. CALCULATIONS

1. Anchor verification calculations and structural analysis, complying with **FBC–2010**, prepared by Al–Farooq Corporation, dated 03/08/12, signed and sealed by Javad Ahmad, P. E.
2. **Glazing complies with ASTM E1300–04**

D. QUALITY ASSURANCE

1. Miami–Dade Department of Permitting, Environment, and Regulatory Affairs (PERA).

E. MATERIAL CERTIFICATIONS

1. Notice of Acceptance No. **11–1102.11** issued to Solutia Inc. for their "**Saflex clear and color glass interlayers**" dated 06/14/12, expiring on 05/21/16.

Jaime D. Gascon, P. E.
Product Control Section Supervisor
NOA No. 12–0517.18
Expiration Date: November 25, 2014
Approval Date: July 19, 2012

NOTICE OF ACCEPTANCE: EVIDENCE SUBMITTED

F. STATEMENTS

1. Statement letter of conformance, no financial interest and compliance with the **FBC–2010**, dated 03/01/12, signed and sealed by Javad Ahmad, P. E.
2. Laboratory compliance letter for Test Reports No.'s **ATL–0717.01–03** and **ATL–0112.01–04**, issued by American Test Lab of South Florida, dated 03/17/04 and 03/10/04, both signed and sealed by William R. Mehner, P. E.
   (Submitted under previous NOA No.04–0908.04)

G. OTHERS

1. Notice of Acceptance **No. 09–0720.10**, issued to Crawford Tracey Corporation for their Series "**Pro–Tech 45 Aluminum Window Wall System – S.M.I.**", approved on 11/04/09 and expiring on 11/25/14.

Jaime D. Gascon, P. E.
Product Control Section Supervisor
NOA No. 12–0517.18
Expiration Date: November 25, 2014
Approval Date: July 19, 2012

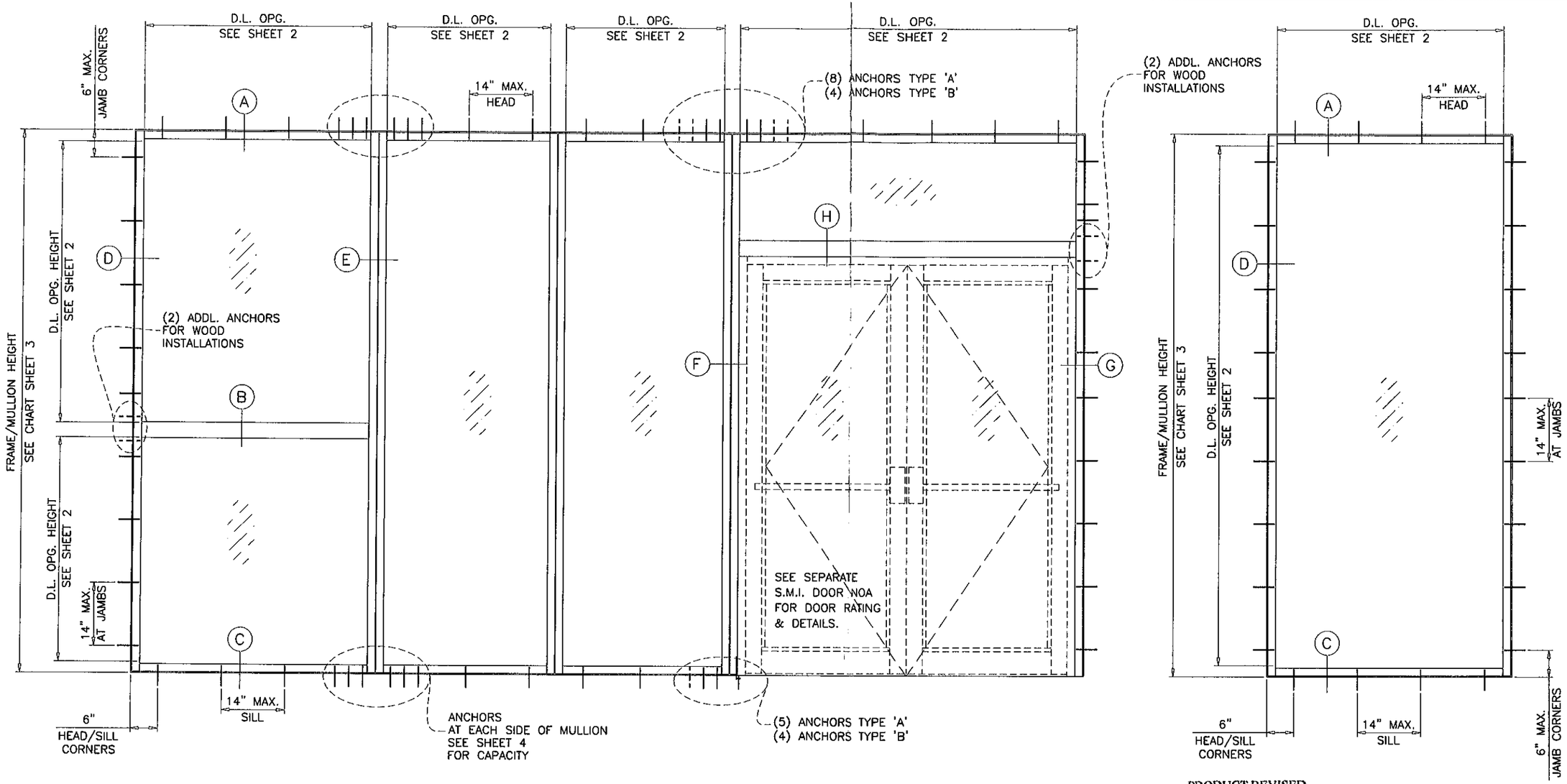

PRO-TECH 45 ALUM WINDOW WALL SYSTEM

THIS SYSTEM MAY BE USED IN CONJUNCTION WITH MIAMI-DADE COUNTY APPR'D SMALL MISSILE IMPACT RESISTANT FRENCH DOORS.

CODE REQUIREMENTS FOR SAFEGUARDS MUST BE OBSERVED.

THIS PRODUCT HAS BEEN DESIGNED AND TESTED TO COMPLY WITH THE REQUIREMENTS OF THE FLORIDA BUILDING CODE INCLUDING HIGH VELOCITY HURRICANE ZONE (HVHZ).

WOOD BUCKS BY OTHERS, MUST BE ANCHORED PROPERLY TO TRANSFER LOADS TO THE STRUCTURE.

ANCHORS SHALL BE AS LISTED, SPACED AS SHOWN ON DETAILS, ANCHORS EMBEDMENT TO BASE MATERIAL SHALL BE BEYOND WALL DRESSING OR STUCCO.

ANCHORING OR LOADING CONDITIONS NOT SHOWN IN THESE DETAILS ARE NOT PART OF THIS APPROVAL.

A LOAD DURATION INCREASE IS USED IN DESIGN OF ANCHORS INTO WOOD ONLY.

MATERIALS INCLUDING BUT NOT LIMITED TO STEEL/METAL SCREWS, THAT COME INTO CONTACT WITH OTHER DISSIMILAR MATERIALS SHALL MEET THE REQUIREMENTS OF THE FLORIDA BLDG. CODE SECTION 2003.8.4.

TYPICAL ELEVATIONS

INSTRUCTIONS:

USE CHARTS AS FOLLOWS.

STEP 1 DETERMINE DESIGN WIND LOAD REQUIREMENT BASED ON WIND VELOCITY, BLDG. HEIGHT, WIND ZONE USING APPLICABLE ASCE 7 STANDARD.

STEP 2 SEE CHARTS ON SHEETS 2 FOR DESIGN LOAD CAPACITY OF DESIRED GLASS SIZE.

STEP 3 CHECK MULLION CAPACITY FOR A GIVEN SPACING AND HEIGHT USING CHARTS ON SHEET 3 THE CAPACITY SHOULD EXCEED THE DESIGN LOAD.

STEP 4 USING CHARTS ON SHEET 4 SELECT ANCHOR OPTION WITH DESIGN RATING MORE THAN DESIGN LOAD SPECIFIED IN STEP 1 ABOVE.

STEP 5 THE LOWEST VALUE RESULTING FROM STEPS 2, 3 AND 4 SHALL APPLY TO ENTIRE SYSTEM.

PRODUCT REVISED
as complying with the Florida
Building Code
Acceptance No 12-0517.18
Expiration Date 11/25/2014
By
Miami Dade Product Control

THIS SYSTEM IS RATED FOR SMALL MISSILE IMPACT.
MIAMI-DADE COUNTY APPROVED IMPACT RESISTANT SHUTTERS REQUIRED FOR INSTALLATIONS UP TO 30 FT. OF GRADE.
SHUTTERS NOT REQD. FOR INSTALLATIONS ABOVE 30 FT. OF GRADE.

Engr: JAVAD AHMAD
CIVIL
FLA. PE # 70592
C.A.N. 3538

MAR 08 2012

AL-FAROOQ CORPORATION
ENGINEERS & PRODUCT DEVELOPMENT
1235 S.W. 87 AVE
MIAMI, FLORIDA 33174
TEL (305) 264-8100 FAX. (305) 262-6978
STORE\W04-70CTC

PRO-TECH 45 ALUM WINDOW WALL SYSTEM (S.M.I.)

CRAWFORD TRACEY CORPORATION
3301 SW 13TH DRIVE
DEERFIELD BEACH, FL. 33442-8101
TEL. (954) 698-6888 FAX. (954) 698-6889

revisions:

no	date	by	description
A	10.18.04		NO CHANGE THIS SHEET
B	08.31.05		UPDATED FOR 2004 FBC
C	07.02.09		UPDATED FOR 2007 FBC
D	03.05.12		UPDATED TO 2010 FBC

date: 08-06-04
scale: 1/2"=1'-0"
dr. by: HAMID
chk. by:

drawing no.
W04-70

GLASS LOAD CAPACITY – PSF		
NOMINAL DIMS.		LAMINATED GLASS
D.L.O. WIDTH	D.L.O. HEIGHT	EXT.(+) & INT.(–)
56–1/2"	68–1/2"	80.0
20"	74"	80.0
26"		80.0
32"		80.0
38"		80.0
44"		80.0
50"		80.0
51–1/4"		80.0
20"	80"	80.0
26"		80.0
32"		80.0
38"		80.0
44"		80.0
47–5/16"		80.0
20"	86"	80.0
26"		80.0
32"		80.0
38"		80.0
44"		80.0
20"	92"	80.0
26"		80.0
32"		80.0
38"		80.0
41–1/4"		80.0
20"	98"	80.0
26"		80.0
32"		80.0
38"		80.0
38–5/8"		80.0
20"	104"	80.0
26"		80.0
32"		80.0
36–7/16"		80.0
20"	110"	80.0
26"		80.0
32"		80.0
34–7/16"		80.0
20"	116"	80.0
26"		80.0
32"		80.0
32–11/16"		80.0
20"	120"	80.0
26"		80.0
31–5/8"		80.0

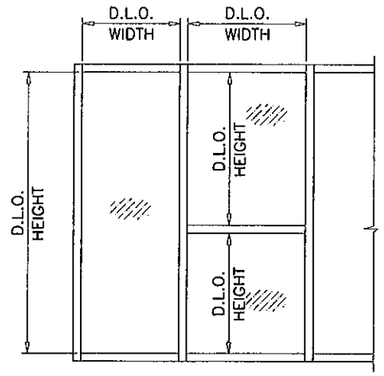

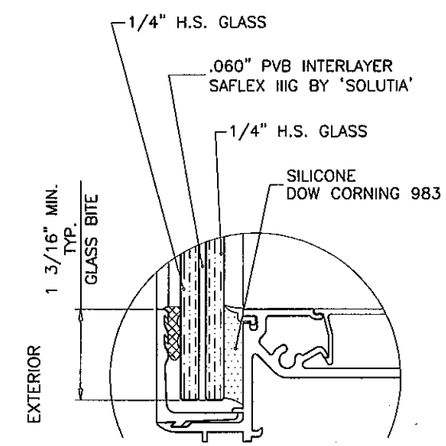

GLAZING DETAIL

PRODUCT REVISED
as complying with the Florida
Building Code
Acceptance No 12-0517.18
Expiration Date 11/25/2014
By
Miami Dade Product Control

NOTE:
GLASS CAPACITIES ON THIS SHEET ARE
BASED ON ASTM E1300–04 (3 SEC. GUSTS).

Engr: JAVAD AHMAD
CIVIL
FLA. PE # 70592
C.A.N. 3538

MAR 08 2012

AL-FAROOQ CORPORATION
ENGINEERS & PRODUCT DEVELOPMENT
1235 S.W. 87 AVE
MIAMI, FLORIDA 33174
TEL. (305) 264-8100 FAX. (305) 262-6978
STORE\W04-70CTC

PRO-TECH 45 ALUM WINDOW WALL SYSTEM (S.M.I.)

CRAWFORD TRACEY CORPORATION
3301 SW 13TH DRIVE
DEERFIELD BEACH, FL. 33442-8101
TEL. (954) 698-6888 FAX. (954) 698-6889

revisions:

no	date	by	description
A	10.18.04		NO CHANGE THIS SHEET
B	08.31.05		NOTE ADDED
C	07.02.09		UPDATED FOR 2007 FBC
D	03.05.12		UPDATED TO 2010 FBC

date: 08-06-04
scale: 1/2" = 1"
dr. by: HAMID
chk. by:

drawing no.
W04-70

MULLION LOAD CAPACITY – PSF
WITHOUT INTERMEDIATE HORIZONTALS

NOMINAL DIMS.		WITHOUT REINFORCING	WITH REINFORCING
WIDTH (W)	FRAME HEIGHT	EXT.(+) & INT.(–)	EXT.(+) & INT.(–)
24"	78"	80.0	80.0
30"		80.0	80.0
36"		80.0	80.0
42"		80.0	80.0
48"		80.0	80.0
54"		80.0	80.0
60"		80.0	80.0
66"		80.0	80.0
72"		80.0	80.0
24"	84"	80.0	80.0
30"		80.0	80.0
36"		80.0	80.0
42"		80.0	80.0
48"		80.0	80.0
54"		80.0	80.0
60"		80.0	80.0
66"		80.0	80.0
24"	90"	80.0	80.0
30"		80.0	80.0
36"		80.0	80.0
42"		80.0	80.0
48"		80.0	80.0
54"		80.0	80.0
60"		80.0	80.0
24"	96"	80.0	80.0
30"		80.0	80.0
36"		80.0	80.0
42"		80.0	80.0
48"		80.0	80.0
54"		75.1	80.0
60"		69.5	80.0
24"	102"	–	80.0
30"		–	80.0
36"		–	80.0
42"		–	80.0
48"		–	80.0
54"		–	80.0
24"	108"	–	80.0
30"		–	80.0
36"		–	80.0
42"		–	80.0
48"		–	80.0
24"	114"	–	80.0
30"		–	80.0
36"		–	80.0
42"		–	80.0
48"		–	71.9
24"	120"	–	80.0
30"		–	80.0
36"		–	79.3
42"		–	68.8
48"		–	61.2

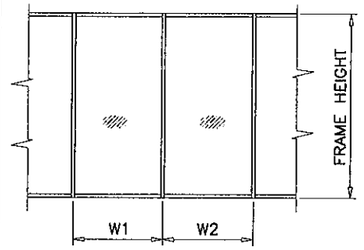

$$\text{WIDTH (W)} = \frac{W1 + W2}{2}$$

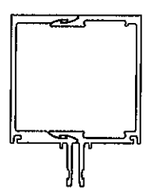

MULLION
W/O REINFORCING

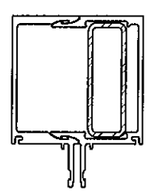

MULLION
W/ REINFORCING

MULLION LOAD CAPACITY – PSF
WITH INTERMEDIATE HORIZONTALS
OR MULLIONS WITH DOORS

NOMINAL DIMS.		WITHOUT REINFORCING	WITH REINFORCING
WIDTH (W)	FRAME HEIGHT	EXT.(+) & INT.(–)	EXT.(+) & INT.(–)
24"	78"	80.0	80.0
30"		80.0	80.0
36"		80.0	80.0
42"		80.0	80.0
48"		80.0	80.0
54"		80.0	80.0
60"		80.0	80.0
66"		80.0	80.0
72"		77.9	80.0
24"	84"	80.0	80.0
30"		80.0	80.0
36"		80.0	80.0
42"		80.0	80.0
48"		80.0	80.0
54"		80.0	80.0
60"		80.0	80.0
66"		72.8	80.0
24"	90"	80.0	80.0
30"		80.0	80.0
36"		80.0	80.0
42"		80.0	80.0
48"		80.0	80.0
54"		77.3	80.0
60"		69.5	80.0
24"	96"	80.0	80.0
30"		80.0	80.0
36"		80.0	80.0
42"		80.0	80.0
48"		76.4	80.0
54"		67.9	80.0
60"		61.1	80.0
24"	102"	–	80.0
30"		–	80.0
36"		–	80.0
42"		–	80.0
48"		–	80.0
54"		–	79.0
24"	108"	–	80.0
30"		–	80.0
36"		–	80.0
42"		–	80.0
48"		–	78.8
24"	114"	–	80.0
30"		–	80.0
36"		–	80.0
42"		–	76.6
48"		–	67.0
24"	120"	–	80.0
30"		–	80.0
36"		–	76.6
42"		–	65.7
48"		–	57.5

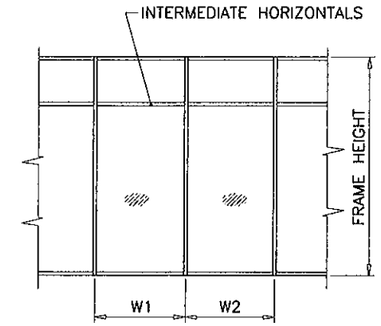

$$\text{WIDTH (W)} = \frac{W1 + W2}{2}$$

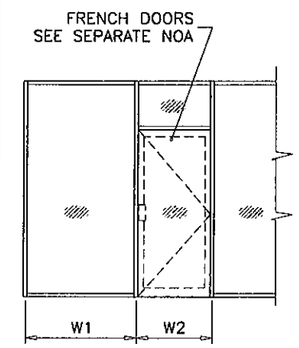

$$\text{WIDTH (W)} = \frac{W1 + W2}{2}$$

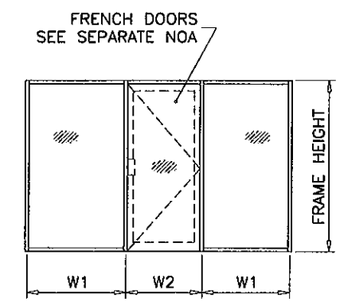

$$\text{WIDTH (W)} = \frac{W1 + W2}{2}$$

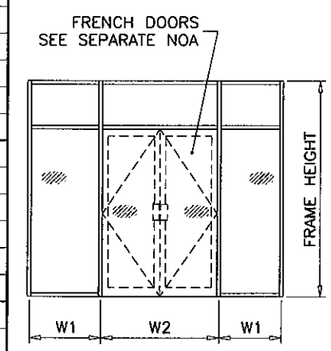

$$\text{WIDTH (W)} = \frac{W1 + W2}{2}$$

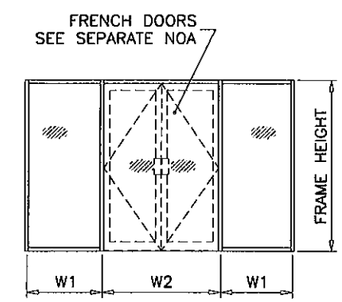

$$\text{WIDTH (W)} = \frac{W1}{2} + \frac{W2}{4}$$

Engr: JAVAD AHMAD
CIVIL
FLA. PE # 70592
C.A.N. 3538

PRODUCT REVISED
as complying with the Florida
Building Code
Acceptance No 12-0517.18
Expiration Date 11/25/2014
By
Miami Dade Product Control

MAR 08 2012

AL-FAROOQ CORPORATION
ENGINEERS & PRODUCT DEVELOPMENT
1235 S.W. 87 AVE
MIAMI, FLORIDA 33174
TEL. (305) 264-8100 FAX. (305) 262-6978
STORE\W04-70CTC

PRO-TECH 45 ALUM WINDOW WALL SYSTEM (S.M.L.)

CRAWFORD TRACEY CORPORATION
3301 SW 13TH DRIVE
DEERFIELD BEACH, FL. 33442-8101
TEL. (954) 698-6888 FAX. (954) 698-6889

revisions:

no	date	by	description
A	10.18.04		NO CHANGE THIS SHEET
B	08.31.05		CHARTS REV.
C	07.02.09		UPDATED FOR 2007 FBC
D	03.05.12		NO CHANGE THIS SHEET

date: 08-06-04
scale:
dr. by: HAMID
chk. by:

drawing no.
W04-70

ANCHOR LOAD CAPACITY – PSF EXT.(+) & INT.(–)					
NOMINAL DIMS.		ANCHORS TYPE 'A'		ANCHORS TYPE 'B'	
WIDTH (W)	FRAME HEIGHT	A2	A3	B1	B2
24"	78"	80.0	80.0	80.0	80.0
30"		80.0	80.0	80.0	80.0
36"		80.0	80.0	80.0	80.0
42"		80.0	80.0	80.0	80.0
48"		80.0	80.0	80.0	80.0
54"		80.0	80.0	80.0	80.0
60"		80.0	80.0	80.0	80.0
66"		80.0	80.0	80.0	80.0
72"		80.0	80.0	80.0	80.0
24"	84"	80.0	80.0	80.0	80.0
30"		80.0	80.0	80.0	80.0
36"		80.0	80.0	80.0	80.0
42"		80.0	80.0	80.0	80.0
48"		80.0	80.0	80.0	80.0
54"		80.0	80.0	80.0	80.0
60"		80.0	80.0	80.0	80.0
66"		80.0	80.0	80.0	80.0
24"	90"	80.0	80.0	80.0	80.0
30"		80.0	80.0	80.0	80.0
36"		80.0	80.0	80.0	80.0
42"		80.0	80.0	80.0	80.0
48"		80.0	80.0	80.0	80.0
54"		80.0	80.0	80.0	80.0
60"		80.0	80.0	80.0	80.0
24"	96"	80.0	80.0	80.0	80.0
30"		80.0	80.0	80.0	80.0
36"		80.0	80.0	80.0	80.0
42"		80.0	80.0	80.0	80.0
48"		80.0	80.0	80.0	80.0
54"		80.0	80.0	80.0	80.0
60"		80.0	80.0	80.0	80.0
24"	102"	80.0	80.0	80.0	80.0
30"		80.0	80.0	80.0	80.0
36"		80.0	80.0	80.0	80.0
42"		80.0	80.0	80.0	80.0
48"		80.0	80.0	80.0	80.0
54"		77.0	80.0	80.0	80.0
24"	108"	80.0	80.0	80.0	80.0
30"		80.0	80.0	80.0	80.0
36"		80.0	80.0	80.0	80.0
42"		80.0	80.0	80.0	80.0
48"		80.0	80.0	80.0	80.0
24"	114"	80.0	80.0	80.0	80.0
30"		80.0	80.0	80.0	80.0
36"		80.0	80.0	80.0	80.0
42"		80.0	80.0	80.0	80.0
48"		77.0	80.0	80.0	80.0
24"	120"	80.0	80.0	80.0	80.0
30"		80.0	80.0	80.0	80.0
36"		80.0	80.0	80.0	80.0
42"		80.0	80.0	80.0	80.0
48"		74.0	80.0	79.0	80.0

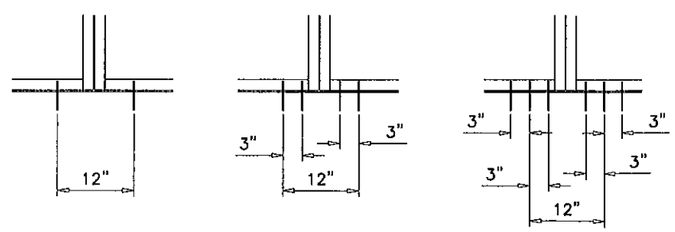

B1 A2, B2, A3

ANCHORS TYPES: SEE SHEET 5 FOR DESCRIPTION

A2 = (2) ANCHORS TYPE 'A' AT EACH SIDE OF MULLION
A3 = (3) ANCHORS TYPE 'A' AT EACH SIDE OF MULLION

B1 = (1) ANCHOR TYPE 'B' AT EACH SIDE OF MULLION
B2 = (2) ANCHORS TYPE 'B' AT EACH SIDE OF MULLION

ALL OTHER ANCHORS TO BE SPACED AS PER ELEVATION.

PRODUCT REVISED
as complying with the Florida
Building Code
Acceptance No 12-0517.18
Expiration Date 11/25/2014
By
Miami Dade Product Control

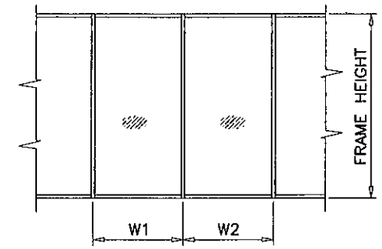

WIDTH (W) = $\frac{W1 + W2}{2}$

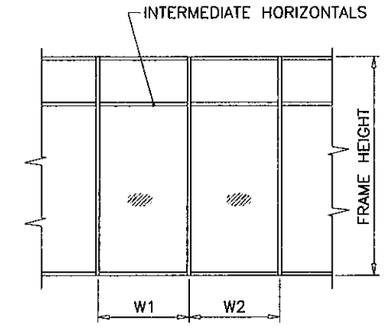

WIDTH (W) = $\frac{W1 + W2}{2}$

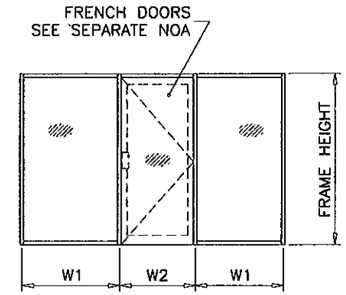

WIDTH (W) = $\frac{W1 + W2}{2}$

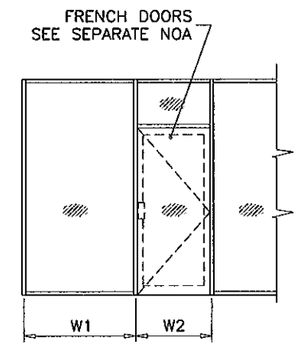

WIDTH (W) = $\frac{W1 + W2}{2}$

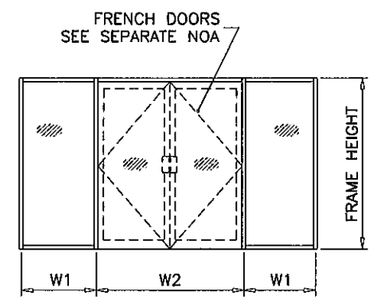

WIDTH (W) = $\frac{W1}{2} + \frac{W2}{4}$

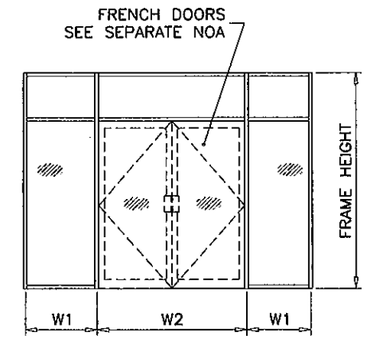

WIDTH (W) = $\frac{W1 + W2}{2}$

Engr: JAVAD AHMAD
CIVIL
FLA. PE # 70592
C.A.N. 3538

MAR 08 2012

AL-FAROOQ CORPORATION
ENGINEERS & PRODUCT DEVELOPMENT
1235 S.W. 87 AVE
MIAMI, FLORIDA 33174
TEL. (305) 264-8100 FAX. (305) 262-6978
STORE\W04-70CTC

PRO-TECH 45 ALUM WINDOW WALL SYSTEM (S.M.I.)

CRAWFORD TRACEY CORPORATION
3301 SW 13TH DRIVE
DEERFIELD BEACH, FL. 33442-8101
TEL. (954) 698-6888 FAX. (954) 698-6889

revisions:

no	date	by	description
A	10.18.04		NO CHANGE THIS SHEET
B	08.31.05		CHART REV.
C	07.02.09		UPDATED FOR 2007 FBC
D	03.05.12		NO CHANGE THIS SHEET

date: 08-06-04
scale:
dr. by: HAMID
chk. by:

drawing no.
W04-70

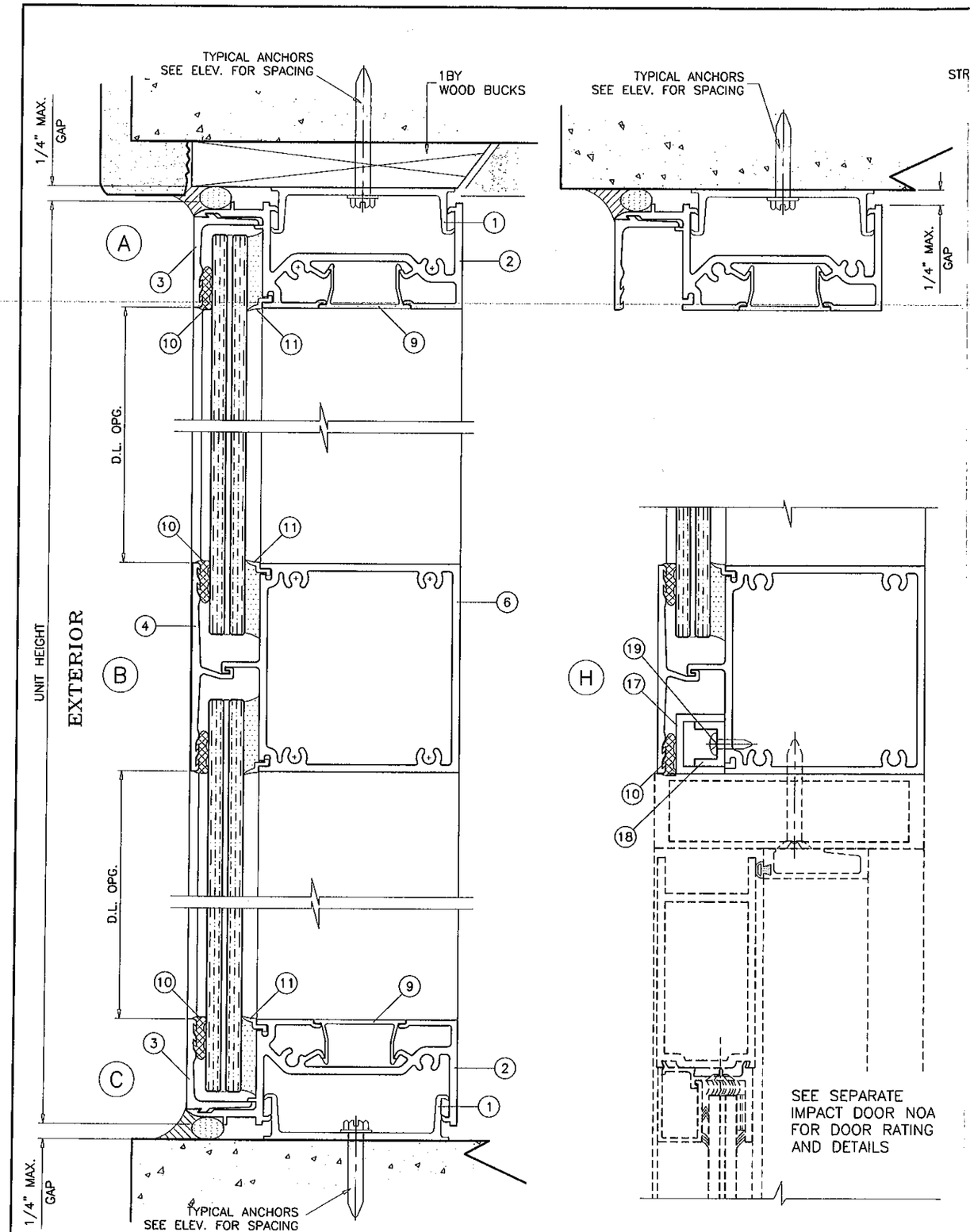

WOOD BUCKS NOT BY CRAWFORD TRACEY, MUST SUPPORT LOADS IMPOSED BY GLAZING SYSTEM AND TRANSFER THEM TO THE BUILDING STRUCTURE.

TYPICAL ANCHORS: SEE ELEV. FOR SPACING

TYPE 'A' – 1/4" DIA. ULTRACON BY 'ELCO' (Fu=177 KSI, Fy=155 KSI)
INTO 2BY WOOD BUCKS OR WOOD STRUCTURES
1-3/8" MIN. PENETRATION INTO WOOD

THRU 1BY BUCKS INTO CONC. OR MASONRY
1-1/4" MIN. EMBED INTO CONC. OR MASONRY

TYPE 'B' – 1/4" DIA. ULTRACON BY 'ELCO' (Fu=177 KSI, Fy=155 KSI)
DIRECTLY INTO CONC. OR MASONRY
1-1/4" MIN. EMBED INTO CONC. OR MASONRY

TYPE 'B' – #14 SMS OR SELF DRILLING SCREWS (GRADE 2 CRS)
INTO METAL STRUCTURES
STEEL : 12 GA. MIN. (Fy = 36 KSI MIN.)
ALUMINUM : 1/8" THK. MIN. (6063-T5 MIN.)
(STEEL IN CONTACT WITH ALUMINUM TO BE PLATED OR PAINTED)

TYPICAL EDGE DISTANCE
INTO CONCRETE AND MASONRY = 2-1/2" MIN.
INTO WOOD STRUCTURE = 1" MIN.
INTO METAL STRUCTURE = 3/4" MIN.

CONCRETE f'c = 3000 PSI MIN.
C-90 HOLLOW/FILLED BLOCK f'm = 2000 PSI MIN.

PRODUCT REVISED
as complying with the Florida
Building Code
Acceptance No 12-0517.18
Expiration Date 11/25/2014
By
Miami Dade Product Control

Engr: JAVAD AHMAD
CIVIL
FLA. PE # 70592
C.A.N. 3538

MAR 08 2012

AL-FAROOQ CORPORATION
ENGINEERS & PRODUCT DEVELOPMENT
1235 S.W. 87 AVE
MIAMI, FLORIDA 33174
TEL. (305) 264-8100 FAX. (305) 262-6978

STORE\W04-70CTC

PRO-TECH 45 ALUM WINDOW WALL SYSTEM (S.M.I.)

CRAWFORD TRACEY CORPORATION
3301 SW 13TH DRIVE
DEERFIELD BEACH, FL. 33442-8101
TEL. (954) 698-6888 FAX. (954) 698-6889

revisions:

no	date	by	description
A	10.18.04		NO CHANGE THIS SHEET
B	08.31.05		METAL STRUCTURE REV.
C	07.02.09		UPDATED FOR 2007 FBC
D	03.05.12		NO CHANGE THIS SHEET

date: 08-06-04
scale: 1/2" = 1"
dr. by: HAMID
chk. by:

drawing no.
W04-70

sheet 5 of 8

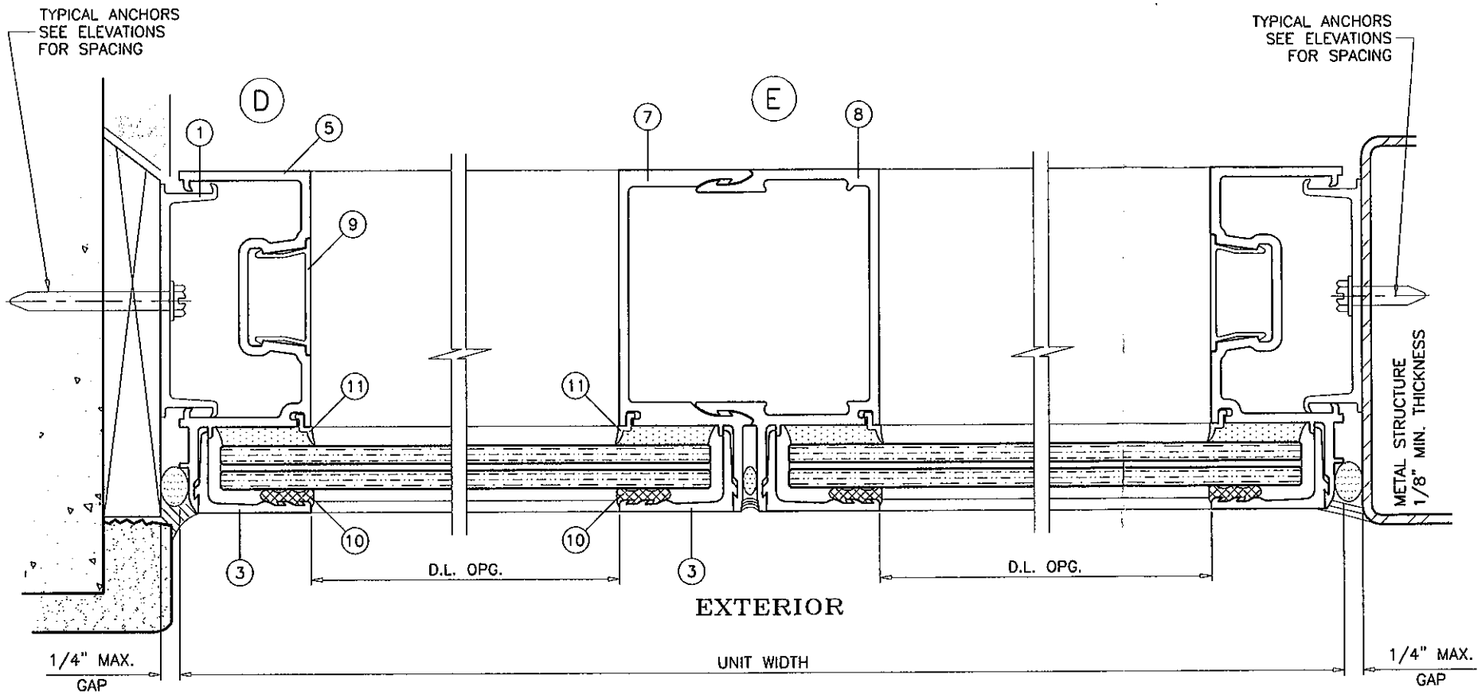

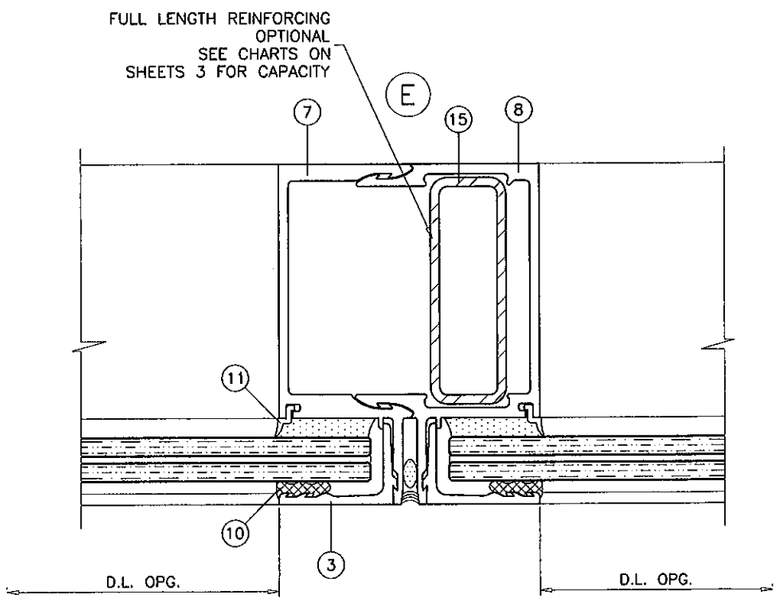

PRODUCT REVISED
as complying with the Florida
Building Code
Acceptance No 12-0517.18
Expiration Date 11/25/2014
By
Miami Dade Product Control

Engr: JAVAD AHMAD
CIVIL
FLA. PE # 70592
C.A.N. 3538

MAR 08 2012

AL-FAROOQ CORPORATION
ENGINEERS & PRODUCT DEVELOPMENT
1235 S.W. 87 AVE
MIAMI, FLORIDA 33174
TEL. (305) 264-8100 FAX. (305) 262-6978
STORE\W04-70CTC

PRO-TECH 45 ALUM WINDOW WALL SYSTEM (S.M.I.)

CRAWFORD TRACEY CORPORATION
3301 SW 13TH DRIVE
DEERFIELD BEACH, FL. 33442-8101
TEL. (954) 698-6888 FAX. (954) 698-6889

revisions:

no	date	by	description
A	10.18.04		NO CHANGE THIS SHEET
B	08.31.05		NO CHANGE THIS SHEET
C	07.02.09		UPDATED FOR 2007 FBC
D	03.05.12		NO CHANGE THIS SHEET

date: 08-06-04
scale: 1/2" = 1"
dr. by: HAMID
chk. by:

drawing no.
W04-70

sheet 6 of 8

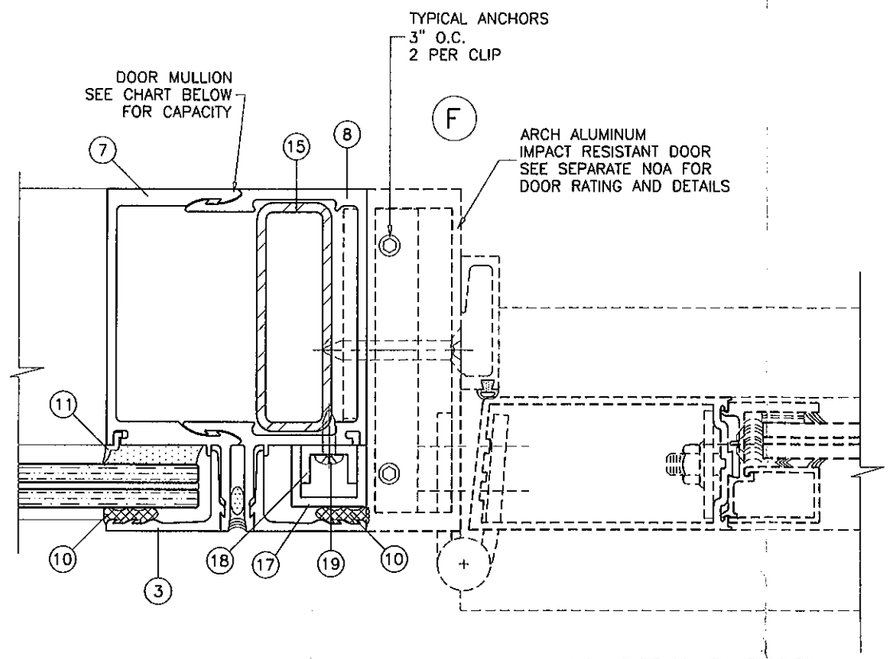

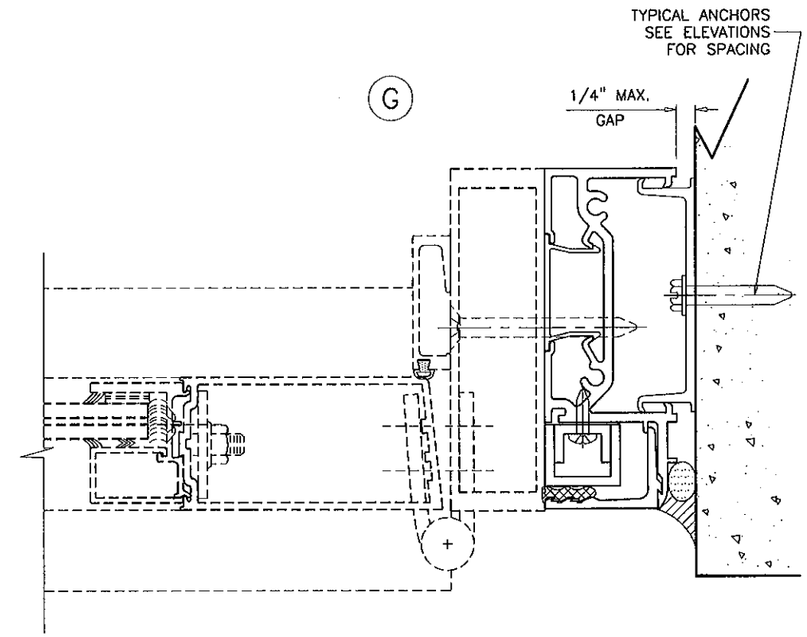

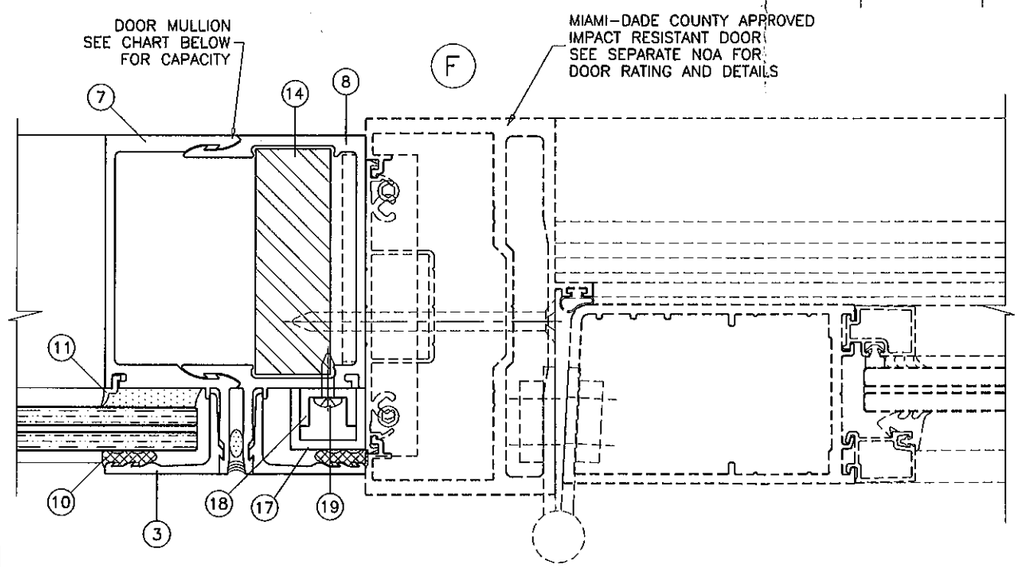

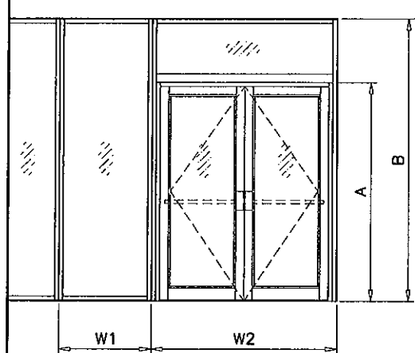

DOOR MULLION DESIGN LOAD CAPACITY - PSF				
FRAME HEIGHT-B INCHES MAX.	DOOR HEIGHT-A INCHES MAX.	WIDTH-W1 INCHES MAX.	WIDTH-W2 INCHES MAX.	EXT. (+) INT. (-)
120	96	36	78	80.0
	90			80.0
	84			77.6
	80			74.5
114	96	40	78	80.0
	80			80.0
108	96	46	78	80.0
	80			80.0
102	96	52	78	80.0
	80			80.0

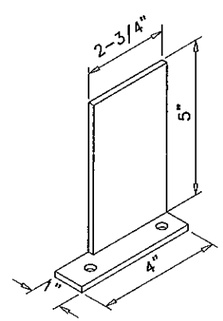

DOOR MULLION INSTALLATION CLIP
1 X 5 X 3/16" ALUM ANGLE

PRODUCT REVISED
as complying with the Florida
Building Code
Acceptance No 12-0517.18
Expiration Date 11/25/2014
By
Miami Dade Product Control

Engr: JAVAD AHMAD
CIVIL
FLA. PE # 70592
C.A.N. 3538

MAR 08 2012

AL-FAROOQ CORPORATION
ENGINEERS & PRODUCT DEVELOPMENT
1235 S.W. 87 AVE
MIAMI, FLORIDA 33174
TEL. (305) 264-8100 FAX. (305) 262-6978
STORE\W04-70CTC

PRO-TECH 45 ALUM WINDOW WALL SYSTEM (S.M.I.)

CRAWFORD TRACEY CORPORATION
3301 SW 13TH DRIVE
DEERFIELD BEACH, FL. 33442-8101
TEL. (954) 698-6888 FAX. (954) 698-6889

revisions:

no	date	by	description
A	10.18.04		REV. PER BCCO COMMENTS
B	08.31.05		NO CHANGE THIS SHEET
C	07.02.09		UPDATED FOR 2007 FBC
D	03.05.12		NO CHANGE THIS SHEET

date: 08-06-04
scale: 1/2" = 1"
dr. by: HAMID
chk. by:

drawing no.
W04-70

sheet 7 of 8

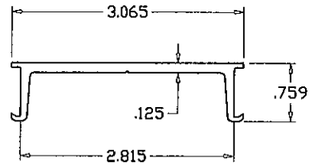

1 SUB BUCK

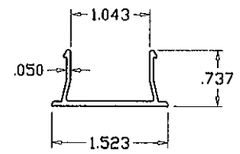

9 SNAP-IN COVER

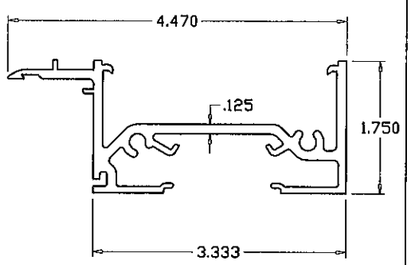

2 FRAME HEAD/SILL

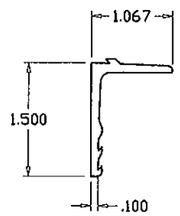

3 GLAZING RETAINER (HEAD/JAMB/SILL)

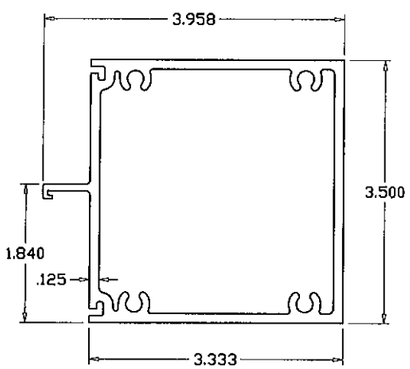

6 FRAME HORIZONTAL

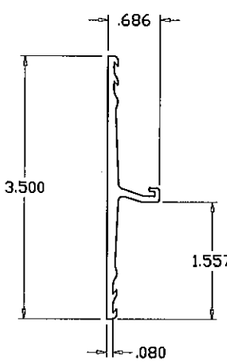

4 GLAZING RETAINER (HORIZONTAL)

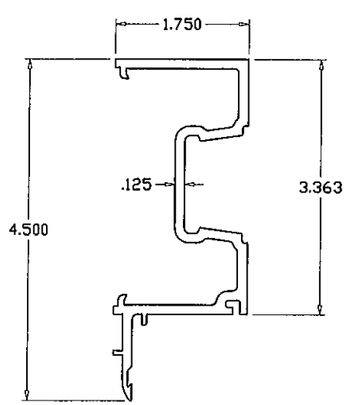

5 FRAME JAMB

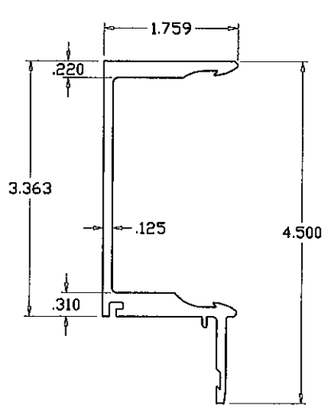

7 FEMALE MULLION

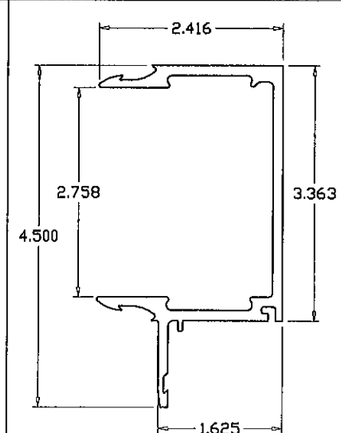

8 MALE MULLION

ITEM NO.	PART NUMBER	QUANTITY	DESCRIPTION	MATERIAL	MANF./SUPPLIER/REMARKS
1	B44B001	AS REQD.	SUB BUCK	6105-T5/6005A-T61	–
2	144P175	AS REQD.	FRAME HEAD/SILL	6063-T6/6005A-T61	–
3	162F111	AS REQD.	GLAZING RETAINER (HEAD/SILL/JAMB)	6063-T6/6005A-T61	–
4	162F340	AS REQD.	GLAZING RETAINER (HORIZONTAL)	6063-T6/6005A-T61	–
5	144J175	AS REQD.	FRAME JAMB	6063-T6/6005A-T61	–
6	144H301	AS REQD.	HORIZONTAL	6063-T6/6005A-T61	–
7	144M112	AS REQD.	FEMALE MULLION	6063-T6/6005A-T61	–
8	144M111	AS REQD.	MALE MULLION	6063-T6/6005A-T61	–
9	T44U119	AS REQD.	SNAP-IN COVER	6063-T6/6005A-T61	–
10	#5	AS REQD.	EXTERIOR GLAZING GASKET	POLYPROPYLENE	–
11	#2	AS REQD.	INTERIOR GLAZING GASKET	POLYPROPYLENE	–
12	–	–	–	–	–
13	983	–	GLAZING COMPOUND	SILICONE	DOW CORNING
14	–	AS REQD.	STEEL BAR, FULL LENGTH	STEEL	1" X 3"
15	–	AS REQD.	REINFORCING TUBE, FULL LENGTH	STEEL	1 X 3 X 11 GA.
16	#14 X 1-1/4"	AS REQD.	FRAME ASSEMBLY SCREWS	ST. STEEL	P.H. SMS
17	–	AS REQD.	FILLER CHANNEL	6063-T6/6005A-T61	13/16 X 1 X 13/16 X 1/8"
18	–	AS REQD.	FILLER CHANNEL	6063-T6/6005A-T61	1/2 X 3/4 X 1/2 X 1/8"
19	#10 X 1"	AS REQD.	FILLER CHANNEL SCREWS	AT. STEEL	AT 14" O.C.

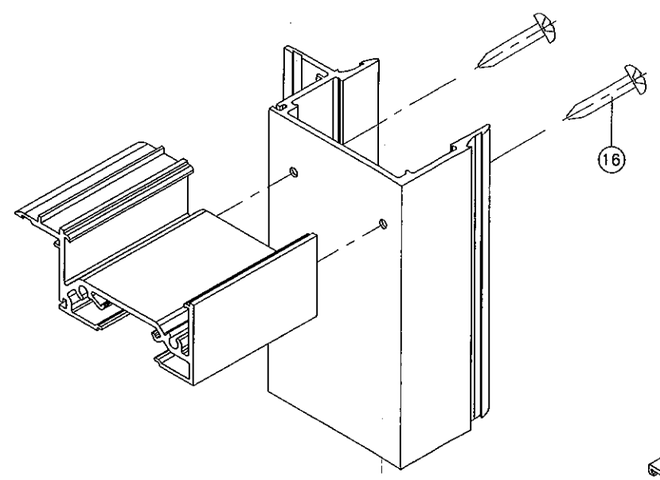

FRAME TOP/BOTTOM CORNER

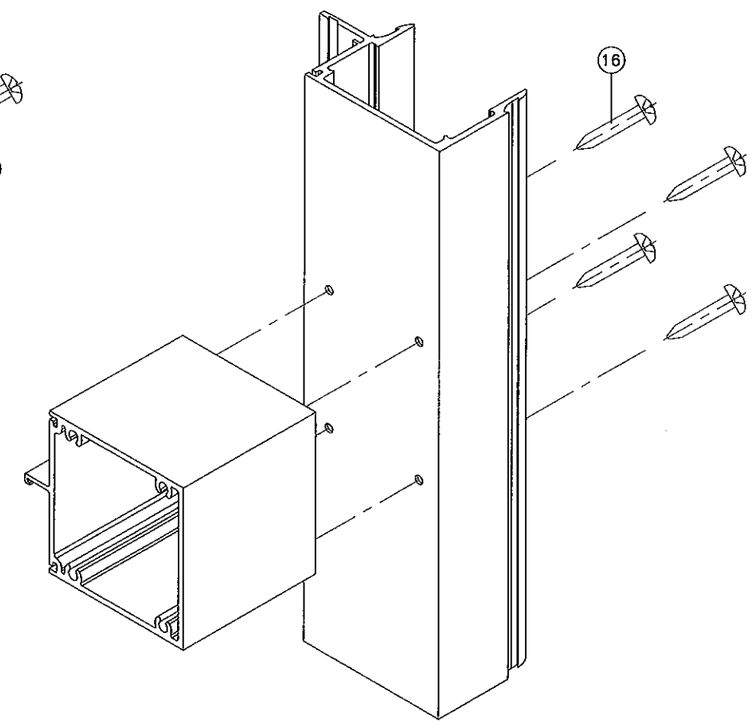

FRAME HORIZONTAL CORNER

PRODUCT REVISED
as complying with the Florida
Building Code
Acceptance No 12-0517.18
Expiration Date 11/25/2014
By
Miami Dade Product Control

Engr: JAVAD AHMAD
CIVIL
FLA. PE # 70592
C.A.N. 3538

MAR 08 2012

AL-FAROOQ CORPORATION
ENGINEERS & PRODUCT DEVELOPMENT
1235 S.W. 87 AVE
MIAMI, FLORIDA 33174
TEL. (305) 264-8100 FAX. (305) 262-6978
STORE\W04-70CTC

PRO-TECH 45 ALUM WINDOW WALL SYSTEM (S.M.L.)

CRAWFORD TRACEY CORPORATION
3301 SW 13TH DRIVE
DEERFIELD BEACH, FL. 33442-8101
TEL. (954) 698-6888 FAX. (954) 698-6889

revisions:

no	date	by	description
A	10.18.04		NO CHANGE THIS SHEET
B	08.31.05		NO CHANGE THIS SHEET
C	07.02.09		UPDATED FOR 2007 FBC
D	03.05.12		UPDATED TO 2010 FBC

date: 08-06-04
scale: 1/2" = 1"
dr. by: HAMID
chk. by:

drawing no.
W04-70

sheet 8 of 8