MIAMI-DADE COUNTY
DEPARTMENT OF PERMITTING, ENVIRONMENT, AND REGULATORY AFFAIRS (PERA)
BOARD AND CODE ADMINISTRATION DIVISION

MIAMI–DADE COUNTY, FLORIDA
PRODUCT CONTROL SECTION
11805 S.W. 26th Street, Room 208
Miami, Florida 33175–2474
T (786) 315–2590 F (786) 315–2599
www.miamidade.gov/pera

NOTICE OF ACCEPTANCE (NOA)

Crawford Tracey Corporation
3301 SW 13th Drive
Deerfield Beach, FL 33442

SCOPE:

This NOA is being issued under the applicable rules and regulations governing the use of construction materials. The documentation submitted has been reviewed and accepted by Miami–Dade County PERA–Product Control Section to be used in Miami–Dade County and other areas where allowed by the Authority Having Jurisdiction (AHJ).

This NOA shall not be valid after the expiration date stated below. The Miami–Dade County Product Control Section (In Miami–Dade County) and/or the AHJ (in areas other than Miami–Dade County) reserve the right to have this product or material tested for quality assurance purposes. If this product or material fails to perform in the accepted manner, the manufacturer will incur the expense of such testing and the AHJ may immediately revoke, modify, or suspend the use of such product or material within their jurisdiction. PERA reserves the right to revoke this acceptance, if it is determined by Miami–Dade County Product Control Section that this product or material fails to meet the requirements of the applicable building code.

This product is approved as described herein, and has been designed to comply with the Florida Building Code, including the High Velocity Hurricane Zone.

DESCRIPTION: Series "Pro–Tech 7" Aluminum Curtain Wall System – L.M.I.

APPROVAL DOCUMENT: Drawing No. **W02–109**, titled "Pro–Tech 7 Alum Curtain Wall System (L.M.I.)", sheets 1 through 15 of 15, dated 06/11/02, prepared by Al–Farooq Corporation, with revision "**D**", dated 03/06/12, signed and sealed by Javad Ahmad, P. E., bearing the Miami–Dade County Product Control Section revision stamp with the Notice of Acceptance number and expiration date by the Miami–Dade County Product Control Section.

MISSILE IMPACT RATING: Large and Small Missile Impact Resistant

LABELING: Each unit shall bear a permanent label with the manufacturer's name or logo, city, state, model/series, and following statement: "Miami–Dade County Product Control Approved", unless otherwise noted herein.

RENEWAL of this NOA shall be considered after a renewal application has been filed and there has been no change in the applicable building code negatively affecting the performance of this product.

TERMINATION of this NOA will occur after the expiration date or if there has been a revision or change in the materials, use, and/ or manufacture of the product or process. Misuse of this NOA as an endorsement of any product, for sales, advertising or any other purposes shall automatically terminate this NOA. Failure to comply with any section of this NOA shall be cause for termination and removal of NOA.

ADVERTISEMENT: The NOA number preceded by the words Miami–Dade County, Florida, and followed by the expiration date may be displayed in advertising literature. If any portion of the NOA is displayed, then it shall be done in its entirety.

INSPECTION: A copy of this entire NOA shall be provided to the user by the manufacturer or its distributors and shall be available for inspection at the job site at the request of the Building Official.

This NOA **revises NOA No. 10–0412.05** and consists of this page 1 and evidence pages E–1 and E–2, as well as approval document mentioned above.

The submitted documentation was reviewed by **Jaime D. Gascon, P. E.**

MIAMI-DADE COUNTY APPROVED

J. Gascon
7/17/12

Crawford Tracey Corporation

NOTICE OF ACCEPTANCE: EVIDENCE SUBMITTED

A. DRAWINGS

1. Manufacturer's die drawings and sections.
   (Submitted under previous NOA No. 07–0625.02)
2. Drawing No. **W02–109**, titled "Pro–Tech 7 Alum Curtain Wall System (L.M.I.)", sheets 1 through 15 of 15, dated 06/11/02, prepared by Al–Farooq Corporation, with revision "**D**", dated 03/06/12, signed and sealed by Javad Ahmad, P. E.

B. TESTS

1. Test reports on: 1) Air Infiltration Test, per FBC, TAS 202–94
   2) Uniform Static Air Pressure Test, Loading per FBC, TAS 202–94
   3) Water Resistance Test, per FBC, TAS 202–94
   4) Large Missile Impact Test per FBC, TAS 201–94
   5) Small Missile Impact Test per FBC, TAS 201–94
   6) Cyclic Wind Pressure Loading per FBC, TAS 203–94

   along with marked–up drawings and installation diagram of an Aluminum Curtain wall system, prepared by American Test Lab of South Florida, Test Reports No.'s **ATL–0912.01–05**, dated 01/31/06 and **ATL–1129.01–04**, dated 01/05/05, both signed and sealed by William R. Mehner, P. E. and by Henry Hattem, P. E.
   (Submitted under previous NOA No. 07–0625.02)
2. Test reports on: 1) Air Infiltration Test, per FBC, TAS 202–94
   2) Uniform Static Air Pressure Test, Loading per FBC, TAS 202–94
   3) Water Resistance Test, per FBC, TAS 202–94
   4) Large Missile Impact Test per FBC, TAS 201–94
   5) Small Missile Impact Test per FBC, TAS 201–94
   6) Cyclic Wind Pressure Loading per FBC, TAS 203–94

   along with marked–up drawings and installation diagram of an Aluminum Curtain wall system, prepared by American Test Lab of South Florida, Test Reports No.'s **ATL–1115.01–01**, dated 02/13/02, **ATL–0521.01–02** and **ATL–0719.02–02** 09/11/02, all signed and sealed by William R. Mehner, P. E. and by Henry Hattem, P. E.
   (Submitted under previous NOA No. 03–0314.01)

C. CALCULATIONS

1. Anchor verification calculations and structural analysis, complying with **FBC–2010**, prepared by Al–Farooq Corporation, dated 03/08/12, signed and sealed by Javad Ahmad, P. E.
2. **Glazing complies with ASTM E 1300–04**

Jaime D. Gascon, P. E.
Product Control Section Supervisor
NOA No. 12–0517.21
Expiration Date: June 26, 2013
Approval Date: July 26, 2012

NOTICE OF ACCEPTANCE: EVIDENCE SUBMITTED

D. QUALITY ASSURANCE

1. Miami–Dade Department of Permitting, Environment, and Regulatory Affairs (PERA).

E. MATERIAL CERTIFICATIONS

1. Notice of Acceptance No. **11–0624.01** issued to **E.I. DuPont DeNemours & Co., Inc.** for their **"DuPont Butacite® PVB Interlayer"** dated 09/08/11, expiring on 12/11/16.

F. STATEMENTS

1. Statement letter of no financial interest, conformance and complying with **FBC–2010**, issued by Al–Farooq Corporation, dated 03/02/12, signed and sealed by Javad Ahmad, P. E.
2. Laboratory compliance letters for Test Reports No.'s **ATL–0912.01–05**, dated 01/31/06 and **ATL–1129.01–04**, dated 01/05/05, both issued by American Test Lab of South Florida, both signed and sealed by William R. Mehner. P. E. and by Henry Hattem, P. E.
   (Submitted under previous NOA No. 07–0625.02)
3. Laboratory compliance letters for Test Reports No.'s **ATL–1115.01–01**, dated 02/13/02, **ATL–0521.01–02** and **ATL–0719.02–02** 09/11/02, all issued by American Test Lab of South Florida, all signed and sealed by William R. Mehner. P. E. and by Henry Hattem, P. E.
   (Submitted under previous NOA No. 03–0314.01)

G. OTHERS

1. Notice of Acceptance No. **10–0412.04**, issued to Crawford Tracey Corporation for their Series "Pro – Tech 7 Aluminum Curtain Wall System – L.M.I.", approved on 06/02/10 and expiring on 06/26/13.

Jaime D. Gascon, P. E.
Product Control Section Supervisor
NOA No. 12–0517.21
Expiration Date: June 26, 2013
Approval Date: July 26, 2012

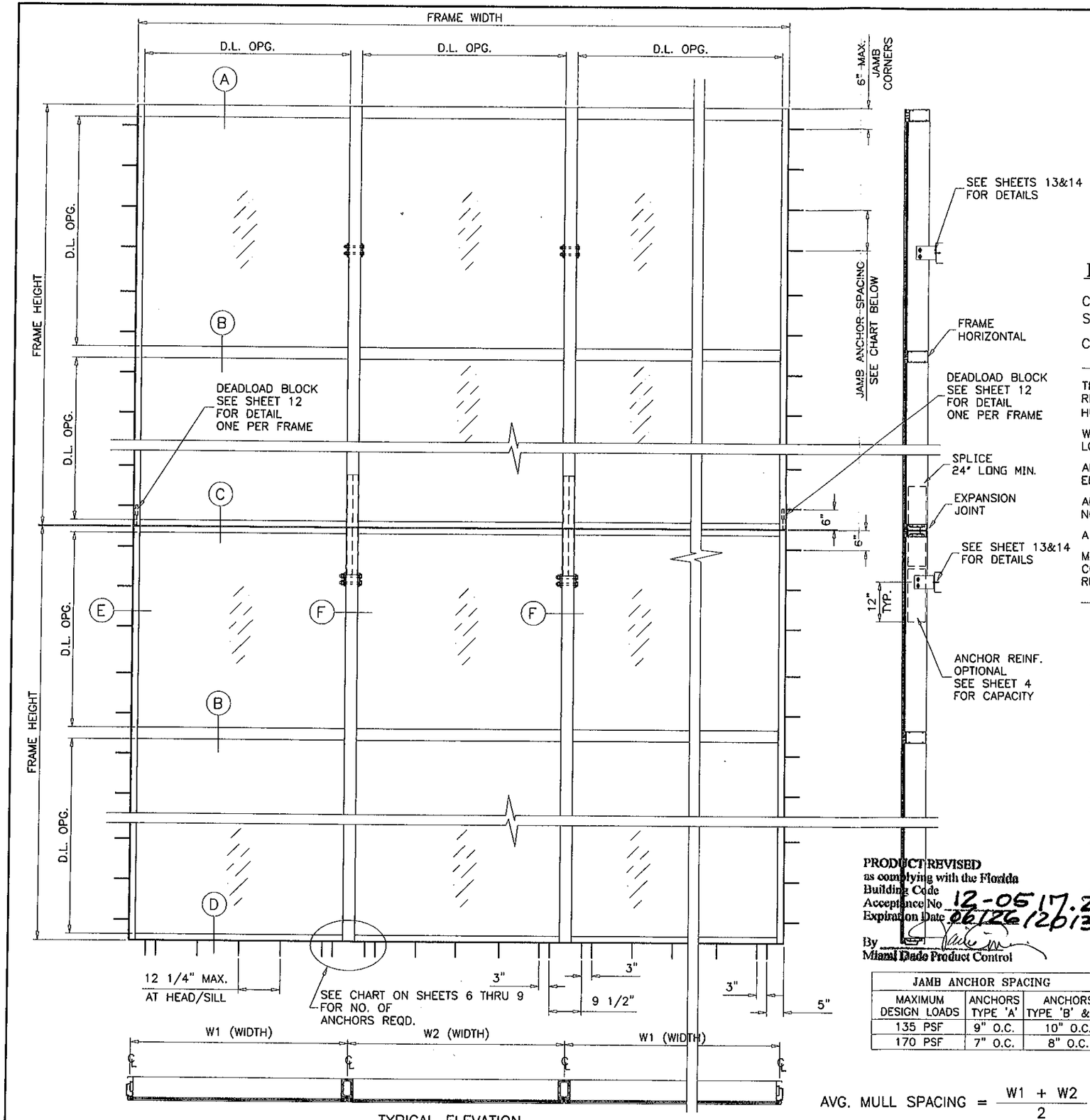

TYPICAL ELEVATION

PRO-TECH 7 ALUM CURTAIN WALL SYSTEM

CURTAIN WALL SYSTEM IS RATED FOR LARGE & SMALL MISSILE IMPACT. SHUTTERS ARE NOT REQD.

CODE REQUIREMENTS FOR SAFEGUARDS MUST BE OBSERVED.

THIS PRODUCT HAS BEEN DESIGNED AND TESTED TO COMPLY WITH THE REQUIREMENTS OF THE FLORIDA BUILDING CODE INCLUDING HIGH VELOCITY HURRICANE ZONE (HVHZ).

WOOD BUCKS BY OTHERS, MUST BE ANCHORED PROPERLY TO TRANSFER LOADS TO THE STRUCTURE.

ANCHORS SHALL BE AS LISTED, SPACED AS SHOWN ON DETAILS, ANCHORS EMBEDMENT TO BASE MATERIAL SHALL BE BEYOND WALL DRESSING OR STUCCO.

ANCHORING OR LOADING CONDITIONS NOT SHOWN IN THESE DETAILS ARE NOT PART OF THIS APPROVAL.

A LOAD DURATION INCREASE IS USED IN DESIGN OF ANCHORS INTO WOOD ONLY.

MATERIALS INCLUDING BUT NOT LIMITED TO STEEL/METAL SCREWS, THAT COME INTO CONTACT WITH OTHER DISSIMILAR MATERIALS SHALL MEET THE REQUIREMENTS OF THE FLORIDA BLDG. CODE SECTION 2003.8.4.

INSTRUCTIONS:

USE CHARTS AS FOLLOWS.

STEP 1 DETERMINE DESIGN WIND LOAD REQUIREMENT BASED ON WIND VELOCITY, BLDG. HEIGHT, WIND ZONE USING APPLICABLE ASCE 7 STANDARD.

STEP 2 CHECK MULLION CAPACITY FOR A GIVEN SPACING AND HEIGHT USING CHARTS ON SHEETS 2 & 3 FOR SINGLE SPANS, AND CHARTS ON SHEET 4 FOR EQUAL MULTIPLE SPANS.

STEP 3 SEE CHARTS ON SHEET 5 FOR DESIGN LOAD CAPACITY OF DESIRED GLASS SIZE BASED ON APPLICABLE WIND DURATION.

STEP 4 USING CHART ON SHEET 6 THRU 9 SELECT ANCHOR OPTION WITH DESIGN RATING MORE THAN DESIGN LOAD SPECIFIED IN STEP 1 ABOVE.

STEP 5 THE LOWEST VALUE RESULTING FROM STEPS 2, 3 AND 4 SHALL APPLY TO ENTIRE SYSTEM.

PRODUCT REVISED
as complying with the Florida Building Code
Acceptance No 12-0517.21
Expiration Date 06/26/2013
By
Miami Dade Product Control

JAMB ANCHOR SPACING		
MAXIMUM DESIGN LOADS	ANCHORS TYPE 'A'	ANCHORS TYPE 'B' & 'C'
135 PSF	9" O.C.	10" O.C.
170 PSF	7" O.C.	8" O.C.

AVG. MULL SPACING = $\frac{W1 + W2}{2}$

LAMINATED GLASS
LARGE MISSILE IMPACT

Engr: JAVAD AHMAD
CIVIL
FLA. PE # 70592
C.A.N. 3538

MAR 08 2012

AL-FAROOQ CORPORATION
ENGINEERS & PRODUCT DEVELOPMENT
1235 S.W. 87 AVE
MIAMI, FLORIDA 33174
TEL. (305) 264-8100 FAX. (305) 262-6978

STORE\W02-109CTC

PRO-TECH 7 ALUM CURTAIN WALL SYSTEM (L.M.I.)

CRAWFORD TRACEY CORPORATION
3301 SW 13TH DRIVE
DEERFIELD BEACH, FL. 33442-8101
TEL. (954) 698-6888 FAX. (954) 698-6889

revisions:			
no	date	by	description
A	5.27.03		NO CHANGE THIS SHEET
B	01.23.07		UPDATED FOR 2004 FBC
C	02.12.10		UPDATED FOR 2007 FBC
D	03.06.12		UPDATED TO 2010 FBC

date: 06-11-02
scale: 3/8"=1'-0"
dr. by: HAMID
chk. by:

drawing no.
W02-109

MULLION LOAD CAPACITY - PSF SINGLE SPANS (WITH OR WITHOUT INTERMEDIATE HORIZONTALS)			
NOMINAL DIMS.		WITHOUT REINFORCING	
WIDTH (W)	FRAME HEIGHT	EXT.(+)	INT.(-)
36"	72"	120.0	170.0
39"		120.0	170.0
42"		120.0	170.0
45"		120.0	170.0
48"		120.0	170.0
51"		120.0	170.0
54"		120.0	170.0
57"		120.0	170.0
60"		120.0	170.0
63"		120.0	170.0
36"	78"	120.0	170.0
39"		120.0	170.0
42"		120.0	170.0
45"		120.0	170.0
48"		120.0	170.0
51"		120.0	170.0
54"		120.0	170.0
57"		120.0	170.0
36"	84"	120.0	170.0
39"		120.0	170.0
42"		120.0	170.0
45"		120.0	170.0
48"		120.0	170.0
51"		120.0	170.0
54"		120.0	170.0
36"	90"	120.0	170.0
39"		120.0	170.0
42"		120.0	170.0
45"		120.0	170.0
48"		120.0	170.0
51"		120.0	170.0
36"	96"	120.0	170.0
39"		120.0	170.0
42"		120.0	170.0
45"		120.0	170.0
48"		120.0	170.0
36"	102"	120.0	170.0
39"		120.0	170.0
42"		120.0	170.0
45"		120.0	170.0
36"	106"	120.0	170.0
39"		120.0	170.0
42"		120.0	170.0
44"		120.0	170.0

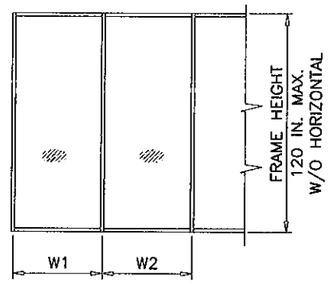

WIDTH (W) = W1
AT FRAME JAMB

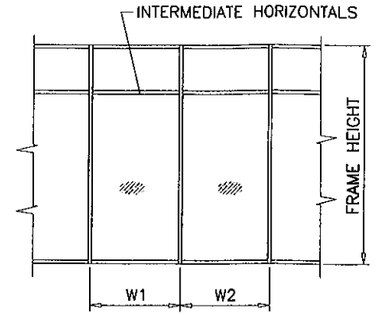

WIDTH (W) = $\frac{W1 + W2}{2}$
AT FRAME MULLION

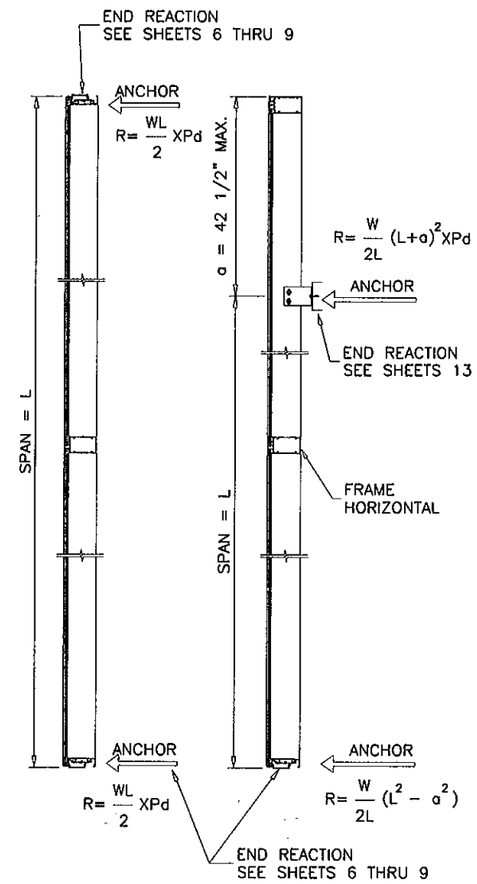

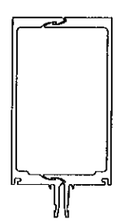

Ix IN^4	Sx IN^3
25.0382	6.5475

WITHOUT REINFORCING

PRODUCT REVISED
as complying with the Florida
Building Code
Acceptance No 12-0517.21
Expiration Date 06/26/2013
By
Miami Dade Product Control

Engr: JAVAD AHMAD
CIVIL
FLA. PE # 70592
C.A.N. 3538

MAR 08 2012

AL-FAROOQ CORPORATION
ENGINEERS & PRODUCT DEVELOPMENT
1235 S.W. 87 AVE
MIAMI, FLORIDA 33174
TEL. (305) 264-8100 FAX. (305) 262-6978
STORE\W02-109CTC

PRO-TECH 7 ALUM CURTAIN WALL SYSTEM

CRAWFORD TRACEY CORPORATION
3301 SW 13TH DRIVE
DEERFIELD BEACH, FL. 33442-8101
TEL. (954) 698-6888 FAX. (954) 698-6889

revisions:

no	date	by	description
A	5.27.03		REV. PER BCCO COMMENTS
B	01.23.07		UPDATED FOR 2004 FBC
C	02.12.10		NO CHANGE THIS SHEET
D	03.06.12		NO CHANGE THIS SHEET

date: 06-11-02
scale: -
dr. by: HAMID
chk. by:

drawing no.
W02-109

MULLION LOAD CAPACITY – PSF
SINGLE SPANS (WITH OR WITHOUT INTERMEDIATE HORIZONTALS)

NOMINAL DIMS.		WITHOUT REINFORCING	ONE ALUM REINFORCING	TWO ALUM REINFORCING	STEEL REINFORCING	
WIDTH (W)	FRAME HEIGHT	EXT.(+)/INT.(−)	EXT.(+)/INT.(−)	EXT.(+)/INT.(−)	EXT.(+)	INT.(−)
36"	108"	120.0	120.0	120.0	120.0	135.0
39"		120.0	120.0	120.0	120.0	135.0
42"		120.0	120.0	120.0	120.0	135.0
45"		120.0	120.0	120.0	120.0	135.0
48"		120.0	120.0	120.0	120.0	135.0
51"		120.0	120.0	120.0	120.0	135.0
54"		120.0	120.0	120.0	120.0	135.0
57"		120.0	120.0	120.0	120.0	135.0
60"		120.0	120.0	120.0	120.0	135.0
63"		120.0	120.0	120.0	120.0	135.0
66"		120.0	120.0	120.0	120.0	135.0
69"		120.0	120.0	120.0	120.0	135.0
72"		120.0	120.0	120.0	120.0	135.0
36"	114"	120.0	120.0	120.0	120.0	135.0
39"		120.0	120.0	120.0	120.0	135.0
42"		120.0	120.0	120.0	120.0	135.0
45"		120.0	120.0	120.0	120.0	135.0
48"		120.0	120.0	120.0	120.0	135.0
51"		120.0	120.0	120.0	120.0	135.0
54"		120.0	120.0	120.0	120.0	135.0
57"		120.0	120.0	120.0	120.0	135.0
60"		120.0	120.0	120.0	120.0	135.0
63"		120.0	120.0	120.0	120.0	135.0
66"		120.0	120.0	120.0	120.0	135.0
69"		120.0	120.0	120.0	120.0	135.0
72"		118.8	118.8	118.8	120.0	135.0
36"	120"	120.0	120.0	120.0	120.0	135.0
39"		120.0	120.0	120.0	120.0	135.0
42"		120.0	120.0	120.0	120.0	135.0
45"		120.0	120.0	120.0	120.0	135.0
48"		120.0	120.0	120.0	120.0	135.0
51"		120.0	120.0	120.0	120.0	135.0
54"		120.0	120.0	120.0	120.0	135.0
57"		120.0	120.0	120.0	120.0	135.0
60"		120.0	120.0	120.0	120.0	135.0
63"		120.0	120.0	120.0	120.0	135.0
66"		120.0	120.0	120.0	120.0	135.0
69"		117.8	117.8	117.8	120.0	135.0
72"		112.9	112.9	112.9	120.0	135.0
36"	126"	120.0	120.0	120.0	120.0	135.0
39"		120.0	120.0	120.0	120.0	135.0
42"		120.0	120.0	120.0	120.0	135.0
45"		120.0	120.0	120.0	120.0	135.0
48"		120.0	120.0	120.0	120.0	135.0
51"		120.0	120.0	120.0	120.0	135.0
54"		120.0	120.0	120.0	120.0	135.0
57"		120.0	120.0	120.0	120.0	135.0
60"		120.0	120.0	120.0	120.0	135.0
63"		120.0	120.0	120.0	120.0	135.0
66"		115.9	117.3	117.3	120.0	135.0
69"		110.8	112.2	112.2	120.0	135.0
72"		106.2	107.5	107.5	120.0	135.0

MULLION LOAD CAPACITY – PSF
SINGLE SPANS (WITH OR WITHOUT INTERMEDIATE HORIZONTALS)

NOMINAL DIMS.		WITHOUT REINFORCING	ONE ALUM REINFORCING	TWO ALUM REINFORCING	STEEL REINFORCING	
WIDTH (W)	FRAME HEIGHT	EXT.(+)/INT.(−)	EXT.(+)/INT.(−)	EXT.(+)/INT.(−)	EXT.(+)	INT.(−)
36"	132"	120.0	120.0	120.0	120.0	135.0
39"		120.0	120.0	120.0	120.0	135.0
42"		120.0	120.0	120.0	120.0	135.0
45"		120.0	120.0	120.0	120.0	135.0
48"		120.0	120.0	120.0	120.0	135.0
51"		120.0	120.0	120.0	120.0	135.0
54"		120.0	120.0	120.0	120.0	135.0
57"		116.7	120.0	120.0	120.0	135.0
60"		110.9	120.0	120.0	120.0	135.0
63"		105.6	117.3	117.3	120.0	135.0
66"		100.8	112.0	112.0	120.0	135.0
69"		96.4	107.1	107.1	120.0	135.0
72"		92.4	102.6	102.6	120.0	135.0
36"	138"	120.0	120.0	120.0	120.0	135.0
39"		120.0	120.0	120.0	120.0	135.0
42"		120.0	120.0	120.0	120.0	135.0
45"		120.0	120.0	120.0	120.0	135.0
48"		120.0	120.0	120.0	120.0	135.0
51"		114.1	120.0	120.0	120.0	135.0
54"		107.8	120.0	120.0	120.0	135.0
57"		102.1	120.0	120.0	120.0	135.0
60"		97.0	117.8	117.8	120.0	135.0
63"		92.4	112.2	112.2	120.0	135.0
66"		88.2	107.1	107.1	120.0	135.0
69"		84.4	102.4	102.4	120.0	135.0
72"		80.8	98.2	98.2	120.0	135.0
36"	144"	120.0	120.0	120.0	120.0	135.0
39"		120.0	120.0	120.0	120.0	135.0
42"		120.0	120.0	120.0	120.0	135.0
45"		113.9	120.0	120.0	120.0	135.0
48"		106.7	120.0	120.0	120.0	135.0
51"		100.5	120.0	120.0	120.0	135.0
54"		94.9	120.0	120.0	120.0	135.0
57"		89.9	114.0	118.8	120.0	135.0
60"		85.4	108.3	112.9	120.0	135.0
63"		81.3	103.1	107.5	120.0	135.0
66"		77.6	98.4	102.6	120.0	135.0
69"		74.3	94.1	98.2	120.0	135.0
72"		71.2	90.2	94.1	94.1	94.1
36"	150"	120.0	120.0	120.0	120.0	135.0
39"		116.2	120.0	120.0	120.0	135.0
42"		107.9	120.0	120.0	120.0	135.0
45"		100.7	120.0	120.0	120.0	135.0
48"		94.4	119.7	120.0	120.0	135.0
51"		88.9	112.7	120.0	120.0	135.0
54"		83.9	106.4	120.0	120.0	135.0
57"		79.5	100.8	114.1	120.0	135.0
60"		75.5	95.8	108.4	120.0	135.0
63"		72.0	91.2	103.2	120.0	135.0
66"		68.7	87.1	98.5	120.0	135.0
69"		65.7	83.3	94.2	94.2	94.2
72"		63.0	79.8	90.3	90.3	90.3

MULLION LOAD CAPACITY – PSF
SINGLE SPANS (WITH OR WITHOUT INTERMEDIATE HORIZONTALS)

NOMINAL DIMS.		WITHOUT REINFORCING	ONE ALUM REINFORCING	TWO ALUM REINFORCING	STEEL REINFORCING	
WIDTH (W)	FRAME HEIGHT	EXT.(+)/INT.(−)	EXT.(+)/INT.(−)	EXT.(+)/INT.(−)	EXT.(+)	INT.(−)
36"	156"	111.9	120.0	120.0	120.0	135.0
39"		103.3	120.0	120.0	120.0	135.0
42"		95.9	120.0	120.0	120.0	135.0
45"		89.5	113.5	120.0	120.0	135.0
48"		84.0	106.4	120.0	120.0	135.0
51"		79.0	100.2	120.0	120.0	135.0
54"		74.6	94.6	114.6	120.0	135.0
57"		70.7	89.6	108.6	120.0	135.0
60"		67.2	85.1	103.1	120.0	135.0
63"		64.0	81.1	98.2	120.0	135.0
66"		61.1	77.4	93.8	93.8	93.8
69"		58.4	74.0	89.7	89.7	89.7
36"	162"	100.0	120.0	120.0	120.0	135.0
39"		92.3	117.0	120.0	120.0	135.0
42"		85.7	108.6	120.0	120.0	135.0
45"		80.0	101.4	120.0	120.0	135.0
48"		75.0	95.0	115.1	120.0	135.0
51"		70.6	89.4	108.3	120.0	135.0
54"		66.6	84.5	102.3	120.0	135.0
57"		63.1	80.0	96.9	120.0	135.0
60"		60.0	76.0	92.1	120.0	135.0
63"		57.1	72.4	87.7	87.7	87.7
66"		54.5	69.1	83.7	83.7	83.7
36"	168"	89.6	113.6	120.0	120.0	135.0
39"		82.7	104.9	120.0	120.0	135.0
42"		76.8	97.4	118.0	120.0	135.0
45"		71.7	90.9	110.1	120.0	135.0
48"		67.2	85.2	103.2	120.0	135.0
51"		63.3	80.2	97.1	120.0	135.0
54"		59.7	75.7	91.7	120.0	135.0
57"		56.6	71.8	86.9	120.0	135.0
60"		53.8	68.2	82.6	120.0	134.9
63"		51.2	64.9	78.6	78.6	78.6

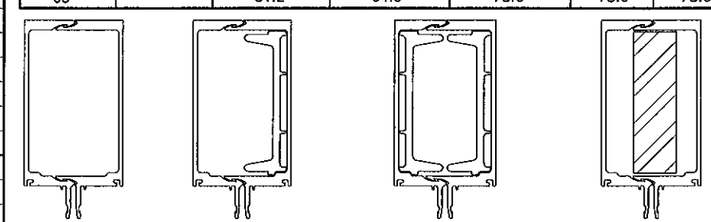

WITHOUT REINFORCING

Ix IN^4	Sx IN^3
25.0382	6.5475

ONE ALUM REINFORCING
L = MULL LENGTH−4"

Ix IN^4	Sx IN^3
31.7421	8.3005

TWO ALUM REINFORCING
L = MULL LENGTH−4"

Ix IN^4	Sx IN^3
38.4460	10.0536

STEEL REINFORCING
L = MULL LENGTH−6"

	Ix IN^4	Sx IN^3
ALUMINUM	25.0382	6.5475
STEEL	15.6250	6.2500
TOTAL Ix ALUM + Ix STL X 2.9	70.3507	

PRODUCT REVISED
as complying with the Florida
Building Code
Acceptance No 12-0517.21
Expiration Date 06/26/2013
By
Miami Dade Product Control

Engr: JAVAD AHMAD
CIVIL
FLA. PE # 70592
C.A.N. 3538

MAR 08 2012

AL-FAROOQ CORPORATION
ENGINEERS & PRODUCT DEVELOPMENT
1235 S.W. 87 AVE
MIAMI, FLORIDA 33174
TEL. (305) 264-8100 FAX. (305) 262-6978
STORE\W02-109CTC

PRO-TECH 7 ALUM CURTAIN WALL SYSTEM

CRAWFORD TRACEY CORPORATION
3301 SW 13TH DRIVE
DEERFIELD BEACH, FL. 33442-8101
TEL. (954) 698-6888 FAX. (954) 698-6889

revisions:

no	date	by	description
A	5.27.03		REV. PER BCCO COMMENTS
B	01.23.07		UPDATED FOR 2004 FBC
C	02.12.10		NO CHANGE THIS SHEET
D	03.06.12		NO CHANGE THIS SHEET

date: 06-11-02
scale: –
dr. by: HAMID
chk. by:

drawing no.
W02-109

MULLION LOAD CAPACITY - PSF MULTIPLE SPANS			
AVERAGE MULL SPACING	SPAN = L	WITHOUT REINFORCING EXT.(+)/INT.(-)	WITH ANCHOR REINF. EXT.(+)/INT.(-)
36"	120"	120.0	120.0
42"		120.0	120.0
48"		120.0	120.0
54"		120.0	120.0
60"		120.0	120.0
66"		120.0	120.0
72"		117.4	117.4
36"	126"	120.0	120.0
42"		120.0	120.0
48"		120.0	120.0
54"		120.0	120.0
60"		120.0	120.0
66"		120.0	120.0
72"		110.9	110.9
36"	132"	120.0	120.0
42"		120.0	120.0
48"		120.0	120.0
54"		120.0	120.0
60"		120.0	120.0
66"		114.8	114.8
72"		105.2	105.2
36"	138"	120.0	120.0
42"		120.0	120.0
48"		120.0	120.0
54"		120.0	120.0
60"		120.0	120.0
66"		109.2	109.2
72"		100.1	100.1
36"	144"	120.0	120.0
42"		120.0	120.0
48"		120.0	120.0
54"		120.0	120.0
60"		110.2	114.5
66"		100.2	104.1
72"		91.9	95.4
36"	150"	120.0	120.0
42"		120.0	120.0
48"		120.0	120.0
54"		112.1	120.0
60"		100.9	109.5
66"		91.7	99.5
72"		84.1	91.2
36"	156"	120.0	120.0
42"		120.0	120.0
48"		115.8	120.0
54"		102.9	116.5
60"		92.6	104.9
66"		84.2	95.3
36"	162"	120.0	120.0
42"		120.0	120.0
48"		106.8	120.0
54"		94.9	111.8
60"		85.4	100.6
66"		77.6	91.5
36"	168"	120.0	120.0
42"		112.9	120.0
48"		98.8	120.0
54"		87.8	107.5
60"		79.0	96.8

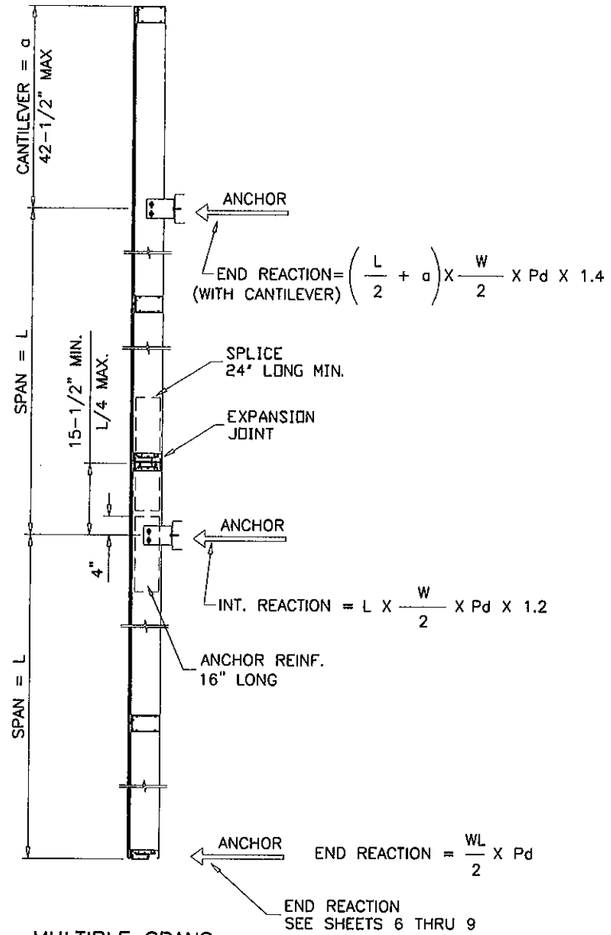

MULTIPLE SPANS

MULTIPLE SPANS WITH OR WITHOUT CANTILEVER
USE TABLE ON THIS SHEET.

W = W1 + W2
SEE SHEET 2

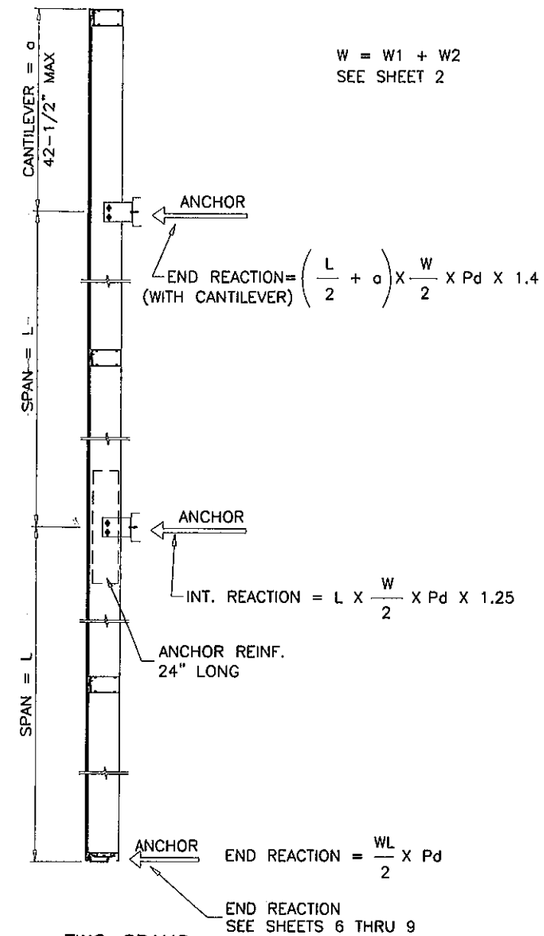

TWO SPANS

TWO SPANS WITH CANTILEVER
AND WITHOUT SPLICE/EXPANSION JOINT
USE TABLE ON THIS SHEET.

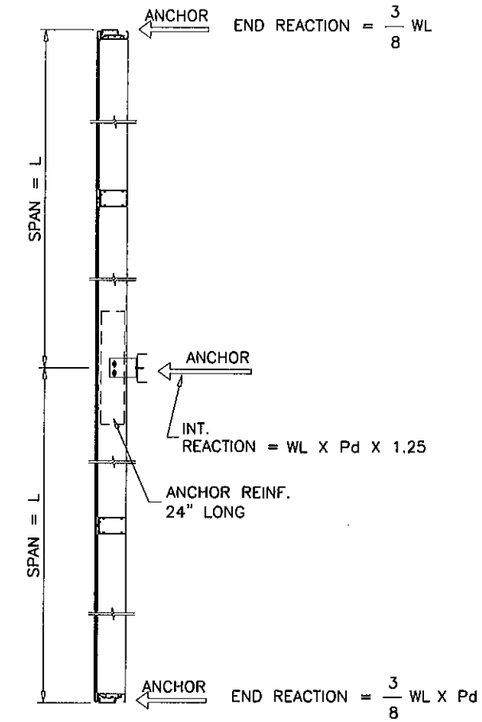

TWO SPANS

TWO SPANS WITHOUT CANTILEVER
AND WITHOUT SPLICE/EXPANSION JOINT
USE TABLE ON THIS SHEET.

UNEQUAL SPANS TO BE CHECKED ON JOB TO JOB BASIS

END REACTIONS MAY CHANGE WITH LOCATION OF
EXPANSION JOINT AND LENGTH OF CANTILEVER
WORST CONDITION SHOWN.

NOTE:
TWO SPANS CONTINUOUS MULLION WITHOUT
OVERHANG CAN BE INSTALLED.
FOR EACH SPAN USE TABLE ON THIS SHEET.

Ix IN^4	Sx IN^3
25.0382	6.5475

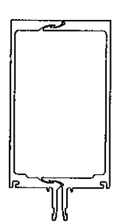

WITHOUT REINFORCING

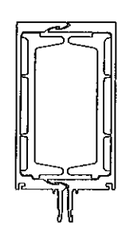

WITH ANCHOR REINFORCING
LENGTH = 16" OR 24" AT ANCHOR LOCATION

PRODUCT REVISED
as complying with the Florida
Building Code
Acceptance No 12-0517.21
Expiration Date 06/26/2013
By
Miami Dade Product Control

Engr: JAVAD AHMAD
CIVIL
FLA. PE # 70592
C.A.N. 3538

MAR 08 2012

AL-FAROOQ CORPORATION
ENGINEERS & PRODUCT DEVELOPMENT
1235 S.W. 87 AVE
MIAMI, FLORIDA 33174
TEL. (305) 264-8100 FAX. (305) 262-6978

STORE\W02-109CTC

PRO-TECH 7 ALUM CURTAIN WALL SYSTEM

CRAWFORD TRACEY CORPORATION
3301 SW 13TH DRIVE
DEERFIELD BEACH, FL. 33442-8101
TEL. (954) 698-6888 FAX. (954) 698-6889

revisions:

no	date	by	description
A	5.27.03		REV. PER BCCO COMMENTS
B	01.23.07		UPDATED FOR 2004 FBC
C	02.12.10		NO CHANGE THIS SHEET
D	03.06.12		NO CHANGE THIS SHEET

date: 06-11-02
scale: -
dr. by: HAMID
chk. by:

drawing no.
W02-109

GLASS LOAD CAPACITY - PSF			
NOMINAL DIMS.		GLASS TYPE 'A'	GLASS TYPE 'B'
D.L.O. WIDTH	D.L.O. HEIGHT	EXT. (+) INT. (−)	EXT. (+) INT. (−)
30"	54"	135.0	170.0
33"		135.0	170.0
36"		135.0	170.0
39"		135.0	170.0
42"		135.0	170.0
45"		135.0	170.0
48"		135.0	120.0
51"		135.0	120.0
54"		135.0	120.0
57"		135.0	120.0
60"		135.0	120.0
63"		135.0	120.0
66"		80.0	120.0
69"		80.0	120.0
72"		80.0	–
30"	60"	135.0	170.0
33"		135.0	170.0
36"		135.0	170.0
39"		135.0	170.0
42"		135.0	120.0
45"		135.0	120.0
48"		135.0	120.0
51"		135.0	120.0
54"		135.0	120.0
57"		135.0	120.0
60"		80.0	120.0
63"		80.0	120.0
66"		80.0	120.0
69"		80.0	120.0
30"	66"	135.0	170.0
33"		135.0	170.0
36"		135.0	170.0
42"		135.0	120.0
45"		135.0	120.0
48"		135.0	120.0
51"		135.0	120.0
54"		80.0	120.0
57"		80.0	120.0
60"		80.0	120.0
63"		80.0	120.0
66"		80.0	120.0
69"		80.0	120.0
30"	72"	135.0	170.0
33"		135.0	170.0
42"		135.0	120.0
45"		135.0	120.0
48"		135.0	120.0
51"		80.0	120.0
54"		80.0	120.0
57"		80.0	120.0
60"		80.0	120.0
63"		80.0	120.0
66"		80.0	120.0
69"		80.0	120.0

GLASS LOAD CAPACITY - PSF			
NOMINAL DIMS.		GLASS TYPE 'A'	GLASS TYPE 'B'
D.L.O. WIDTH	D.L.O. HEIGHT	EXT. (+) INT. (−)	EXT. (+) INT. (−)
42"	78"	135.0	120.0
45"		135.0	120.0
48"		80.0	120.0
51"		80.0	120.0
54"		80.0	120.0
57"		80.0	120.0
60"		80.0	120.0
63"		80.0	120.0
66"		80.0	120.0
69"		–	120.0
42"	84"	135.0	120.0
45"		80.0	120.0
48"		80.0	120.0
51"		80.0	120.0
54"		80.0	120.0
57"		80.0	120.0
60"		80.0	120.0
63"		45.0	120.0
66"		45.0	120.0
69"		–	120.0
30"	90"	135.0	120.0
33"		135.0	120.0
36"		135.0	120.0
39"		135.0	120.0
42"		120.0	120.0
45"		120.0	120.0
48"		120.0	120.0
51"		120.0	120.0
54"		120.0	120.0
57"		120.0	120.0
60"		45.0	120.0
63"		45.0	120.0
66"		45.0	117.3
69"		–	114.5
30"	96"	135.0	120.0
33"		135.0	120.0
36"		135.0	120.0
39"		120.0	120.0
42"		120.0	120.0
45"		120.0	120.0
48"		120.0	120.0
51"		120.0	120.0
54"		120.0	120.0
57"		45.0	120.0
60"		45.0	116.4
63"		45.0	112.9
66"		45.0	110.1
69"		–	108.0

GLASS LOAD CAPACITY - PSF			
NOMINAL DIMS.		GLASS TYPE 'A'	GLASS TYPE 'B'
D.L.O. WIDTH	D.L.O. HEIGHT	EXT. (+) INT. (−)	EXT. (+) INT. (−)
30"	102"	135.0	120.0
33"		135.0	120.0
36"		80.0	120.0
39"		80.0	120.0
42"		80.0	120.0
45"		80.0	120.0
48"		80.0	120.0
51"		80.0	120.0
54"		45.0	118.5
57"		45.0	113.4
60"		45.0	109.2
63"		45.0	105.9
66"		45.0	103.2
69"		–	101.3
30"	108"	135.0	120.0
33"		80.0	120.0
36"		80.0	120.0
39"		80.0	120.0
42"		80.0	120.0
45"		80.0	120.0
48"		80.0	120.0
51"		45.0	117.7
54"		45.0	111.8
57"		45.0	106.4
60"		45.0	100.9
63"		45.0	98.8
66"		45.0	96.9
30"	114"	135.0	120.0
33"		80.0	120.0
36"		80.0	120.0
39"		80.0	120.0
42"		80.0	120.0
45"		80.0	120.0
48"		45.0	119.5
51"		45.0	111.9
54"		45.0	105.6
57"		45.0	97.9
60"		45.0	95.3
63"		45.0	93.3
42"	120"	80.0	120.0
45"		45.0	120.0
48"		45.0	114.1
51"		45.0	106.6
54"		45.0	98.5
57"		45.0	94.0
60"		45.0	92.2
42"	126"	45.0	120.0
45"		45.0	119.1
48"		45.0	109.7
51"		45.0	102.4
54"		45.0	95.2
57"		45.0	90.6

GLASS LOAD CAPACITY - PSF			
NOMINAL DIMS.		GLASS TYPE 'A'	GLASS TYPE 'B'
D.L.O. WIDTH	D.L.O. HEIGHT	EXT. (+) INT. (−)	EXT. (+) INT. (−)
42"	132"	45.0	120.0
45"		45.0	114.4
48"		45.0	106.1
51"		45.0	98.3
54"		45.0	92.4
42"	138"	45.0	120.0
45"		45.0	112.5
48"		45.0	103.5
51"		45.0	95.9
42"	144"	45.0	120.0
45"		45.0	111.0
48"		45.0	101.2
42"	150"	45.0	120.0
45"		45.0	109.4
48"		45.0	100.6

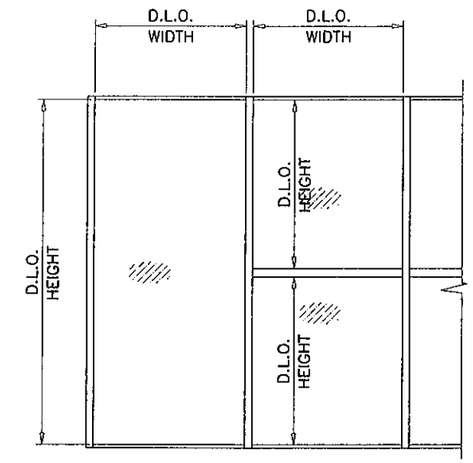

NOTE:
GLASS CAPACITIES ON THIS SHEET ARE BASED ON ASTM E1300-04 (3 SEC. GUSTS).

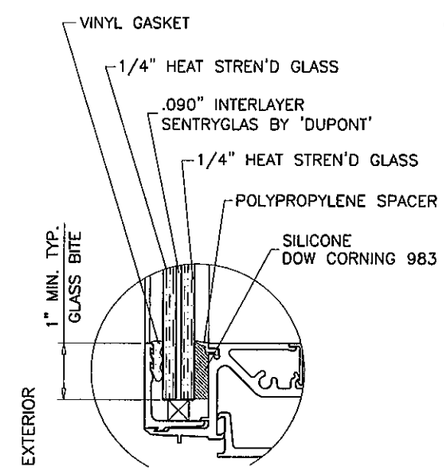

GLASS TYPE 'A'
VISION & SPANDREL

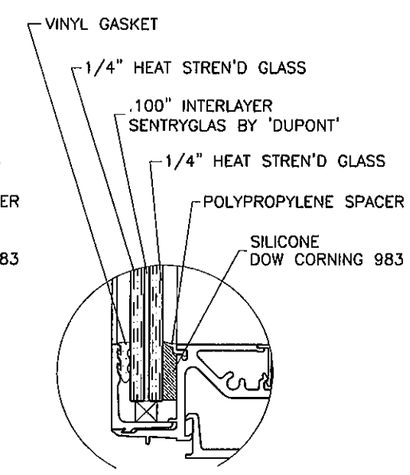

GLASS TYPE 'B'
VISION & SPANDREL

PRODUCT REVISED
as complying with the Florida Building Code
Acceptance No 12-0517.21
Expiration Date 06/26/2013
By
Miami Dade Product Control

Engr: JAVAD AHMAD
CIVIL
FLA. PE # 70592
C.A.N. 3538

MAR 08 2012

AL-FAROOQ CORPORATION
ENGINEERS & PRODUCT DEVELOPMENT
1235 S.W. 87 AVE
MIAMI, FLORIDA 33174
TEL (305) 264-3100 FAX. (305) 262-6978

STORE\W02-109CTC

PRO-TECH 7 ALUM CURTAIN WALL SYSTEM

CRAWFORD TRACEY CORPORATION
3301 SW 13TH DRIVE
DEERFIELD BEACH, FL. 33442-8101
TEL. (954) 698-6888 FAX. (954) 698-6889

revisions:

no	date	by	description
A	5.27.03		REV. PER BCCO COMMENTS
B	01.23.07		UPDATED FOR 2004 FBC
C	02.12.10		NO CHANGE THIS SHEET
D	03.06.12		UPDATED TO 2010 FBC

date: 06-11-02
scale: 3/8" = 1"
dr. by: HAMID
chk. by:

drawing no.
W02-109

ANCHOR LOAD CAPACITY - PSF EXT.(+) & INT.(-)								
NOMINAL DIMS.		ANCHORS TYPE 'A'			ANCHORS TYPE 'B'		ANCHORS TYPE 'C'	
WIDTH (W)	FRAME HEIGHT	A3	A4	A5	B2	B3	C2	C3
36"	72"	170.0	170.0	170.0	170.0	170.0	170.0	170.0
39"		170.0	170.0	170.0	170.0	170.0	170.0	170.0
42"		170.0	170.0	170.0	170.0	170.0	170.0	170.0
45"		170.0	170.0	170.0	170.0	170.0	170.0	170.0
48"		170.0	170.0	170.0	170.0	170.0	170.0	170.0
51"		170.0	170.0	170.0	170.0	170.0	170.0	170.0
54"		170.0	170.0	170.0	170.0	170.0	170.0	170.0
57"		164.2	170.0	170.0	161.3	170.0	170.0	170.0
60"		156.0	170.0	170.0	167.2	170.0	170.0	170.0
63"		148.6	170.0	170.0	159.2	170.0	170.0	170.0
66"		151.3	170.0	170.0	152.0	170.0	170.0	170.0
69"		144.7	170.0	170.0	157.5	170.0	170.0	170.0
72"		138.4	170.0	170.0	150.9	170.0	170.0	170.0
36"	78"	170.0	170.0	170.0	170.0	170.0	170.0	170.0
39"		170.0	170.0	170.0	170.0	170.0	170.0	170.0
42"		170.0	170.0	170.0	170.0	170.0	170.0	170.0
45"		170.0	170.0	170.0	170.0	170.0	170.0	170.0
48"		168.0	170.0	170.0	170.0	170.0	170.0	170.0
51"		158.1	170.0	170.0	166.4	170.0	170.0	170.0
54"		160.0	170.0	170.0	157.2	170.0	170.0	170.0
57"		151.6	170.0	170.0	148.9	170.0	170.0	170.0
60"		144.0	170.0	170.0	154.3	170.0	170.0	170.0
63"		137.1	170.0	170.0	147.0	170.0	170.0	170.0
66"		139.6	165.8	170.0	140.3	170.0	170.0	170.0
69"		133.6	158.6	170.0	145.4	170.0	170.0	170.0
72"		128.0	160.0	170.0	139.3	170.0	170.0	170.0
36"	84"	170.0	170.0	170.0	170.0	170.0	170.0	170.0
39"		170.0	170.0	170.0	170.0	170.0	170.0	170.0
42"		170.0	170.0	170.0	170.0	170.0	170.0	170.0
45"		166.4	170.0	170.0	159.2	170.0	170.0	170.0
48"		156.0	170.0	170.0	164.2	170.0	170.0	170.0
51"		146.8	170.0	170.0	154.6	170.0	170.0	170.0
54"		148.6	170.0	170.0	146.0	170.0	170.0	170.0
57"		140.8	168.9	170.0	138.3	170.0	170.0	170.0
60"		133.7	169.4	170.0	143.3	170.0	170.0	170.0
63"		127.3	161.3	170.0	136.5	170.0	170.0	170.0
66"		129.7	154.0	170.0	130.3	170.0	170.0	170.0
69"		124.0	147.3	170.0	135.0	166.2	166.2	170.0
72"		118.9	148.6	170.0	129.4	159.2	159.2	170.0
36"	90"	170.0	170.0	170.0	170.0	170.0	170.0	170.0
39"		166.4	170.0	170.0	170.0	170.0	170.0	170.0
42"		166.4	170.0	170.0	159.2	170.0	170.0	170.0
45"		155.3	170.0	170.0	148.6	170.0	170.0	170.0
48"		145.6	170.0	170.0	153.3	170.0	170.0	170.0
51"		137.0	170.0	170.0	144.3	170.0	170.0	170.0
54"		138.7	166.4	170.0	136.2	170.0	170.0	170.0
57"		131.4	157.6	170.0	129.1	170.0	170.0	170.0
60"		124.8	158.1	170.0	133.8	167.2	167.2	170.0
63"		118.9	150.6	170.0	127.4	159.2	159.2	170.0
66"		121.0	143.7	170.0	121.6	162.1	162.1	170.0
69"		115.8	137.5	166.4	126.0	155.1	155.1	170.0
72"		110.9	138.7	159.5	120.8	148.6	148.6	170.0

ANCHOR LOAD CAPACITY - PSF EXT.(+) & INT.(-)								
NOMINAL DIMS.		ANCHORS TYPE 'A'			ANCHORS TYPE 'B'		ANCHORS TYPE 'C'	
WIDTH (W)	FRAME HEIGHT	A3	A4	A5	B2	B3	C2	C3
36"	96"	169.0	170.0	170.0	170.0	170.0	170.0	170.0
39"		156.0	170.0	170.0	160.8	170.0	170.0	170.0
42"		156.0	170.0	170.0	149.3	170.0	170.0	170.0
45"		145.6	170.0	170.0	139.3	170.0	170.0	170.0
48"		136.5	170.0	170.0	143.7	170.0	170.0	170.0
51"		128.5	165.2	170.0	135.2	170.0	170.0	170.0
54"		130.0	156.0	170.0	127.7	170.0	170.0	170.0
57"		123.2	147.8	170.0	121.0	165.0	165.0	170.0
60"		117.0	148.2	170.0	125.4	156.8	156.8	170.0
63"		111.4	141.1	163.4	119.4	149.3	149.3	170.0
66"		113.5	134.7	163.1	114.0	152.0	152.0	170.0
69"		108.5	128.9	156.0	118.1	145.4	145.4	166.6
72"		104.0	130.0	149.5	113.2	139.3	139.3	159.7
36"	102"	159.1	170.0	170.0	163.9	170.0	170.0	170.0
39"		146.8	170.0	170.0	151.3	170.0	170.0	170.0
42"		146.8	170.0	170.0	140.5	170.0	170.0	170.0
45"		137.0	166.4	170.0	131.1	170.0	170.0	170.0
48"		128.5	165.2	170.0	135.2	170.0	170.0	170.0
51"		120.9	155.5	170.0	127.3	162.0	162.0	170.0
54"		122.4	146.8	170.0	120.2	163.9	163.9	170.0
57"		115.9	139.1	170.0	113.9	155.3	155.3	170.0
60"		110.1	139.5	161.5	118.0	147.5	147.5	169.1
63"		104.9	132.8	153.8	112.4	140.5	140.5	161.0
66"		106.8	126.8	153.5	107.3	143.1	143.1	163.9
69"		102.1	121.3	146.8	111.2	136.8	136.8	156.8
72"		97.9	122.4	140.7	106.5	131.1	131.1	150.3

SEE SHEET 7 FOR LARGER HEIGHTS

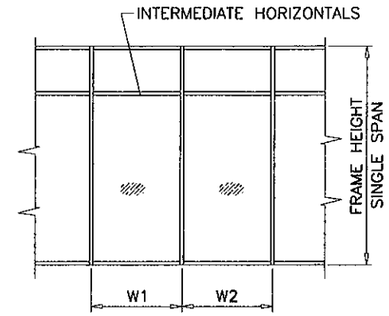

$$\text{WIDTH (W)} = \frac{W1 + W2}{2}$$

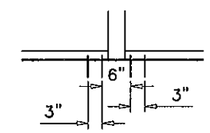

B2, C2

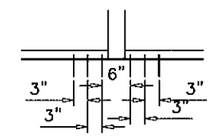

A3, B3, C3

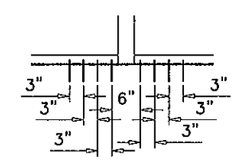

A4

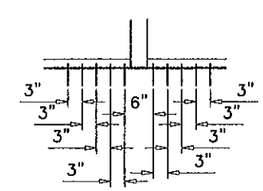

A5

PRODUCT REVISED
as complying with the Florida
Building Code
Acceptance No 12-0517.21
Expiration Date 06/26/2013
By
Miami Dade Product Control

ANCHORS TYPES: SEE SHEET 7 FOR DESCRIPTION

A3 = (3) ANCHORS TYPE 'A' AT EACH SIDE OF MULLION
A4 = (4) ANCHORS TYPE 'A' AT EACH SIDE OF MULLION
A5 = (5) ANCHORS TYPE 'A' AT EACH SIDE OF MULLION

B2 = (2) ANCHORS TYPE 'B' AT EACH SIDE OF MULLION
B3 = (3) ANCHORS TYPE 'B' AT EACH SIDE OF MULLION

C2 = (2) ANCHORS TYPE 'C' AT EACH SIDE OF MULLION
C3 = (3) ANCHORS TYPE 'C' AT EACH SIDE OF MULLION

ALL OTHER ANCHORS TO BE SPACED AS PER ELEVATION.

Engr: JAVAD AHMAD
CIVIL
FLA. PE # 70592
C.A.N. 3538

MAR 08 2012

AL-FAROOQ CORPORATION
ENGINEERS & PRODUCT DEVELOPMENT
1235 S.W. 87 AVE
MIAMI, FLORIDA 33174
TEL. (305) 264-8100 FAX. (305) 262-6978
STORE\W02-109CTC

PRO-TECH 7 ALUM CURTAIN WALL SYSTEM

CRAWFORD TRACEY CORPORATION
3301 SW 13TH DRIVE
DEERFIELD BEACH, FL. 33442-8101
TEL. (954) 698-6888 FAX. (954) 698-6889

revisions:

no	date	by	description
B	01.23.07		UPDATED FOR 2004 FBC
C	02.12.10		NO CHANGE THIS SHEET
D	03.06.12		NO CHANGE THIS SHEET

date: 06-11-02
scale: -
dr. by: HAMID
chk. by:

drawing no.
W02-109

ANCHOR LOAD CAPACITY - PSF
EXT.(+) & INT.(-)

NOMINAL DIMS.		ANCHORS TYPE 'A'			ANCHORS TYPE 'B'		ANCHORS TYPE 'C'	
WIDTH (W)	FRAME HEIGHT	A3	A4	A5	B2	B3	C2	C3
36"	108"	135.0	135.0	135.0	135.0	135.0	135.0	135.0
39"		135.0	135.0	135.0	135.0	135.0	135.0	135.0
42"		135.0	135.0	135.0	132.7	135.0	135.0	135.0
45"		129.4	135.0	135.0	123.9	135.0	135.0	135.0
48"		121.3	135.0	135.0	127.7	135.0	135.0	135.0
51"		114.2	135.0	135.0	120.2	135.0	135.0	135.0
54"		115.6	135.0	135.0	113.5	135.0	135.0	135.0
57"		109.5	131.4	135.0	107.6	135.0	135.0	135.0
60"		104.0	131.7	135.0	111.5	135.0	135.0	135.0
63"		99.0	125.5	135.0	106.2	135.0	135.0	135.0
66"		100.8	119.8	135.0	101.3	135.0	135.0	135.0
69"		96.5	114.6	135.0	105.0	129.2	129.2	135.0
72"		92.4	115.6	132.9	100.6	123.9	123.9	135.0
36"	114"	135.0	135.0	135.0	135.0	135.0	135.0	135.0
39"		131.4	135.0	135.0	135.0	135.0	135.0	135.0
42"		131.4	135.0	135.0	125.7	135.0	135.0	135.0
45"		122.6	135.0	135.0	117.3	135.0	135.0	135.0
48"		114.9	135.0	135.0	121.0	135.0	135.0	135.0
51"		108.2	135.0	135.0	113.9	135.0	135.0	135.0
54"		109.5	131.4	135.0	107.6	135.0	135.0	135.0
57"		103.7	124.5	135.0	101.9	135.0	135.0	135.0
60"		98.5	124.8	135.0	105.6	132.0	132.0	135.0
63"		93.8	118.9	135.0	100.6	125.7	125.7	135.0
66"		95.5	113.5	135.0	96.0	128.0	128.0	135.0
69"		91.4	108.5	131.4	99.5	122.4	122.4	135.0
72"		87.6	109.5	125.9	95.3	117.3	117.3	134.5
36"	120"	135.0	135.0	135.0	135.0	135.0	135.0	135.0
39"		124.8	135.0	135.0	128.6	135.0	135.0	135.0
42"		124.8	135.0	135.0	119.4	135.0	135.0	135.0
45"		116.5	135.0	135.0	111.5	135.0	135.0	135.0
48"		109.2	135.0	135.0	115.0	135.0	135.0	135.0
51"		102.8	132.1	135.0	108.2	135.0	135.0	135.0
54"		104.0	124.8	135.0	102.2	135.0	135.0	135.0
57"		98.5	118.2	135.0	96.8	132.0	132.0	135.0
60"		93.6	118.6	135.0	100.3	125.4	125.4	135.0
63"		89.1	112.9	130.7	95.5	119.4	119.4	135.0
66"		90.8	107.8	130.5	91.2	121.6	121.6	135.0
69"		86.8	103.1	124.8	94.5	116.3	116.3	133.3
72"		83.2	104.0	119.6	90.6	111.5	111.5	127.7
36"	126"	128.8	135.0	135.0	132.7	135.0	135.0	135.0
39"		118.9	135.0	135.0	122.5	135.0	135.0	135.0
42"		118.9	135.0	135.0	113.7	135.0	135.0	135.0
45"		110.9	134.7	135.0	106.2	135.0	135.0	135.0
48"		104.0	133.7	135.0	109.5	135.0	135.0	135.0
51"		97.9	125.8	135.0	103.0	131.1	131.1	135.0
54"		99.0	118.9	135.0	97.3	132.7	132.7	135.0
57"		93.8	112.6	135.0	92.2	125.7	125.7	135.0
60"		89.1	112.9	130.7	95.5	119.4	119.4	135.0
63"		84.9	107.5	124.5	91.0	113.7	113.7	130.3
66"		86.4	102.6	124.3	86.9	115.8	115.8	132.7
69"		82.7	98.2	118.9	90.0	110.8	110.8	126.9
72"		79.2	99.0	113.9	86.3	106.2	106.2	121.7

ANCHOR LOAD CAPACITY - PSF
EXT.(+) & INT.(-)

NOMINAL DIMS.		ANCHORS TYPE 'A'			ANCHORS TYPE 'B'		ANCHORS TYPE 'C'	
WIDTH (W)	FRAME HEIGHT	A3	A4	A5	B2	B3	C2	C3
36"	132"	122.9	135.0	135.0	126.7	135.0	135.0	135.0
39"		113.5	135.0	135.0	116.9	135.0	135.0	135.0
42"		113.5	135.0	135.0	108.6	135.0	135.0	135.0
45"		105.9	128.6	135.0	101.3	135.0	135.0	135.0
48"		99.3	127.6	135.0	104.5	133.0	133.0	135.0
51"		93.4	120.1	135.0	98.4	125.2	125.2	135.0
54"		94.5	113.5	135.0	92.9	126.7	126.7	135.0
57"		89.6	107.5	131.4	88.0	120.0	120.0	135.0
60"		85.1	107.8	124.8	91.2	114.0	114.0	130.6
63"		81.0	102.6	118.9	86.9	108.6	108.6	124.4
66"		82.5	98.0	118.6	82.9	110.5	110.5	126.7
69"		78.9	93.7	113.5	85.9	105.7	105.7	121.2
72"		75.6	94.5	108.7	82.3	101.3	101.3	116.1
36"	138"	117.6	135.0	135.0	121.2	135.0	135.0	135.0
39"		108.5	135.0	135.0	111.8	135.0	135.0	135.0
42"		108.5	131.8	135.0	103.9	135.0	135.0	135.0
45"		101.3	123.0	135.0	96.9	135.0	135.0	135.0
48"		95.0	122.1	135.0	100.0	127.2	127.2	135.0
51"		89.4	114.9	134.1	94.1	119.7	119.7	135.0
54"		90.4	108.5	132.6	88.9	121.2	121.2	135.0
57"		85.7	102.8	125.7	84.2	114.8	114.8	131.5
60"		81.4	103.1	119.4	87.2	109.0	109.0	125.0
63"		77.5	98.2	113.7	83.1	103.9	103.9	119.0
66"		78.9	93.7	113.5	79.3	105.7	105.7	121.2
69"		75.5	89.6	108.5	82.2	101.1	101.1	115.9
72"		72.3	90.4	104.0	78.8	96.9	96.9	111.1
36"	144"	112.7	135.0	135.0	116.1	135.0	135.0	135.0
39"		104.0	135.0	135.0	107.2	135.0	135.0	135.0
42"		104.0	126.3	135.0	99.5	135.0	135.0	135.0
45"		97.1	117.9	135.0	92.9	130.0	130.0	135.0
48"		91.0	117.0	135.0	95.8	121.9	121.9	135.0
51"		85.6	110.1	128.5	90.2	114.7	114.7	131.5
54"		86.7	104.0	127.1	85.1	116.1	116.1	133.1
57"		82.1	98.5	120.4	80.7	110.0	110.0	126.1
60"		78.0	98.8	114.4	83.6	104.5	104.5	119.8
63"		74.3	94.1	109.0	79.6	99.5	99.5	114.0
66"		75.6	89.8	108.7	76.0	101.3	101.3	116.1
69"		72.3	85.9	104.0	78.8	96.9	96.9	111.1
72"		69.3	86.7	99.7	75.5	92.9	92.9	106.4
36"	150"	108.2	135.0	135.0	111.5	135.0	135.0	135.0
39"		99.8	130.6	135.0	102.9	133.8	133.8	135.0
42"		99.8	121.2	135.0	95.5	133.8	133.8	135.0
45"		93.2	113.2	135.0	89.2	124.8	124.8	135.0
48"		87.4	112.3	131.0	92.0	117.0	117.0	134.1
51"		82.2	105.7	123.3	86.6	110.2	110.2	126.2
54"		83.2	99.8	122.0	81.7	111.5	111.5	127.7
57"		78.8	94.6	115.6	77.4	105.6	105.6	121.0
60"		74.9	94.8	109.8	80.3	100.3	100.3	115.0
63"		71.3	90.3	104.6	76.4	95.5	95.5	109.5
66"		72.6	86.2	104.4	73.0	97.3	97.3	111.5
69"		69.5	82.5	99.8	75.6	93.1	93.1	106.6
72"		66.6	83.2	95.7	72.5	89.2	89.2	102.2

ANCHOR LOAD CAPACITY - PSF
EXT.(+) & INT.(-)

NOMINAL DIMS.		ANCHORS TYPE 'A'			ANCHORS TYPE 'B'		ANCHORS TYPE 'C'	
WIDTH (W)	FRAME HEIGHT	A3	A4	A5	B2	B3	C2	C3
36"	156"	104.0	135.0	135.0	107.2	135.0	135.0	135.0
39"		96.0	125.5	135.0	98.9	128.6	128.6	135.0
42"		96.0	116.6	135.0	91.9	128.6	128.6	135.0
45"		89.6	108.8	134.4	85.7	120.0	120.0	135.0
48"		84.0	108.0	126.0	88.4	112.5	112.5	129.0
51"		79.1	101.6	118.6	83.2	105.9	105.9	121.4
54"		80.0	96.0	117.3	78.6	107.2	107.2	122.8
57"		75.8	90.9	111.2	74.5	101.5	101.5	116.4
60"		72.0	91.2	105.6	77.2	96.5	96.5	110.5
63"		68.6	86.9	100.6	73.5	91.9	91.9	105.3
66"		69.8	82.9	100.4	70.2	93.5	93.5	107.2
69"		66.8	79.3	96.0	72.7	89.5	89.5	102.5
36"	162"	100.1	131.0	135.0	103.2	134.2	134.2	135.0
39"		92.4	120.9	135.0	95.3	123.9	123.9	135.0
42"		92.4	112.3	135.0	88.5	123.9	123.9	135.0
45"		86.3	104.8	129.4	82.6	115.6	115.6	132.5
48"		80.9	104.0	121.3	85.1	108.4	108.4	124.2
51"		76.1	97.9	114.2	80.1	102.0	102.0	116.9
54"		77.0	92.4	113.0	75.7	103.2	103.2	118.3
57"		73.0	87.6	107.0	71.7	97.8	97.8	112.0
60"		69.3	87.8	101.7	74.3	92.9	92.9	106.4
63"		66.0	83.6	96.8	70.8	88.5	88.5	101.4
66"		67.2	79.8	96.6	67.6	90.1	90.1	103.2
36"	168"	96.6	126.3	135.0	99.5	129.4	129.4	135.0
39"		89.1	116.6	135.0	91.9	119.4	119.4	135.0
42"		89.1	108.2	133.7	85.3	119.4	119.4	135.0
45"		83.2	101.0	124.8	79.6	111.5	111.5	127.7
48"		78.0	100.3	117.0	82.1	104.5	104.5	119.8
51"		73.4	94.4	110.1	77.3	98.4	98.4	112.7
54"		74.3	89.1	109.0	73.0	99.5	99.5	114.0
57"		70.4	84.5	103.2	69.1	94.3	94.3	108.0
60"		66.9	84.7	98.1	71.7	89.6	89.6	102.6
63"		63.7	80.7	93.4	68.2	85.3	85.3	97.8

PRODUCT REVISED
as complying with the Florida
Building Code
Acceptance No 12-0517.21
Expiration Date 06/26/2013
By
Miami Dade Product Control

Engr: JAVAD AHMAD
CIVIL
FLA. PE # 70592
C.A.N. 3538

MAR 08 2012

AL-FAROOQ CORPORATION
ENGINEERS & PRODUCT DEVELOPMENT
1235 S.W. 87 AVE
MIAMI, FLORIDA 33174
TEL. (305) 264-8100 FAX. (305) 262-6978
STORE\W02-109CTC

PRO-TECH 7 ALUM CURTAIN WALL SYSTEM

CRAWFORD TRACEY CORPORATION
3301 SW 13TH DRIVE
DEERFIELD BEACH, FL. 33442-8101
TEL. (954) 698-6888 FAX. (954) 698-6889

revisions:

no	date	by	description
B	01.23.07		UPDATED FOR 2004 FBC
C	02.12.10		NO CHANGE THIS SHEET
D	03.06.12		NO CHANGE THIS SHEET

date: 06-11-02
scale: -
dr. by: HAMID
chk. by:

drawing no.
W02-109

sheet 7 of 15

ANCHOR LOAD CAPACITY - PSF EXT.(+) & INT.(-)					
NOMINAL DIMS.		4 ANCHORS PER PLATE TYPE 'D'		6 ANCHORS PER PLATE TYPE 'D'	
WIDTH (W)	FRAME HEIGHT	3-1/4" EDGE DIST.	4" EDGE DIST.	3-1/4" EDGE DIST.	4" EDGE DIST.
36"	72"	170.0	170.0	170.0	170.0
39"		170.0	170.0	170.0	170.0
42"		170.0	170.0	170.0	170.0
45"		170.0	170.0	170.0	170.0
48"		170.0	170.0	170.0	170.0
51"		170.0	170.0	170.0	170.0
54"		170.0	170.0	170.0	170.0
57"		170.0	170.0	170.0	170.0
60"		170.0	170.0	170.0	170.0
63"		164.3	170.0	170.0	170.0
36"	78"	170.0	170.0	170.0	170.0
39"		170.0	170.0	170.0	170.0
42"		170.0	170.0	170.0	170.0
45"		170.0	170.0	170.0	170.0
48"		170.0	170.0	170.0	170.0
51"		170.0	170.0	170.0	170.0
54"		170.0	170.0	170.0	170.0
57"		167.6	170.0	170.0	170.0
36"	84"	170.0	170.0	170.0	170.0
39"		170.0	170.0	170.0	170.0
42"		170.0	170.0	170.0	170.0
45"		170.0	170.0	170.0	170.0
48"		170.0	170.0	170.0	170.0
51"		170.0	170.0	170.0	170.0
54"		164.3	170.0	170.0	170.0
36"	90"	170.0	170.0	170.0	170.0
39"		170.0	170.0	170.0	170.0
42"		170.0	170.0	170.0	170.0
45"		170.0	170.0	170.0	170.0
48"		170.0	170.0	170.0	170.0
51"		162.4	170.0	170.0	170.0
36"	96"	170.0	170.0	170.0	170.0
39"		170.0	170.0	170.0	170.0
42"		170.0	170.0	170.0	170.0
45"		170.0	170.0	170.0	170.0
48"		161.8	170.0	170.0	170.0
36"	102"	170.0	170.0	170.0	170.0
39"		170.0	170.0	170.0	170.0
42"		170.0	170.0	170.0	170.0
45"		162.4	170.0	170.0	170.0
36"	106"	170.0	170.0	170.0	170.0
39"		170.0	170.0	170.0	170.0
42"		167.4	170.0	170.0	170.0
44"		159.8	170.0	170.0	170.0

SEE SHEET 9 FOR LARGER HEIGHTS

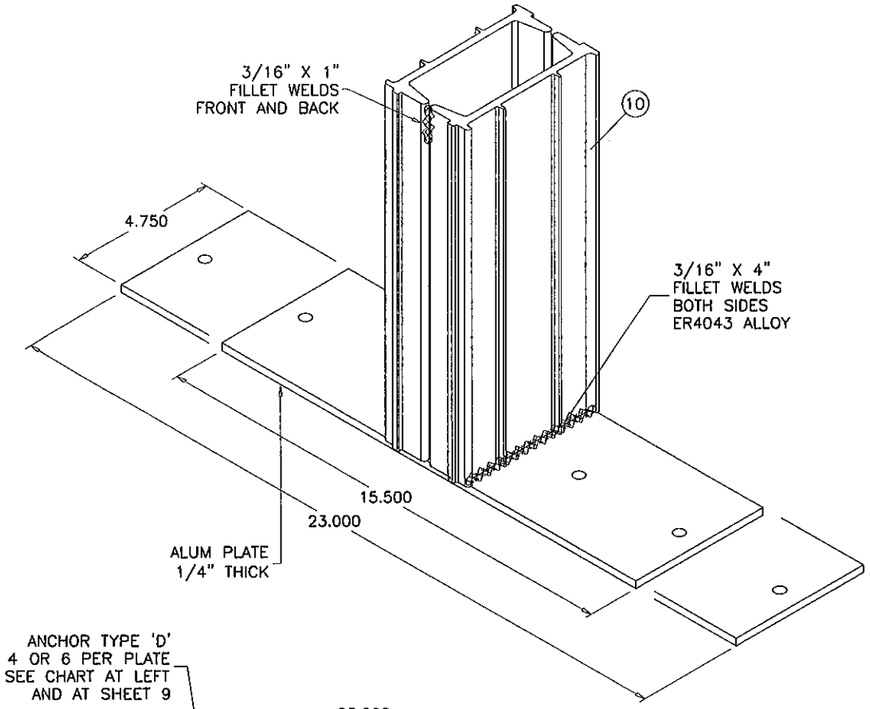

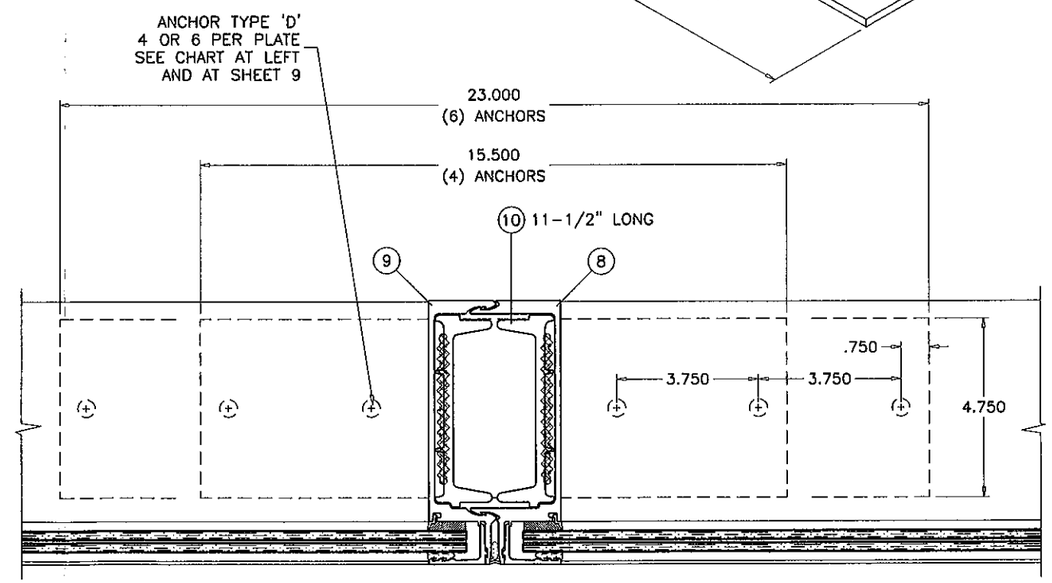

TYPICAL ANCHORS:

TYPE 'D'- 3/8" DIA. POWERS WEDGE-BOLT ANCHOR
DIRECTLY INTO CONCRETE
1-1/2" MIN. EMBED INTO CONC. (3000 PSI MIN.)
EDGE DIST. (SEE CHARTS)

PRODUCT REVISED
as complying with the Florida
Building Code
Acceptance No 12-0517.21
Expiration Date 06/26/2013
By
Miami Dade Product Control

Engr: JAVAD AHMAD
CIVIL
FLA., PE # 70592
C.A.N. 3538

MAR 08 2012

AL-FAROOQ CORPORATION
ENGINEERS & PRODUCT DEVELOPMENT
1235 S.W. 87 AVE
MIAMI, FLORIDA 33174
TEL. (305) 264-8100 FAX. (305) 262-6978

STORE\W02-109CTC

PRO-TECH 7 ALUM CURTAIN WALL SYSTEM

CRAWFORD TRACEY CORPORATION
3301 SW 13TH DRIVE
DEERFIELD BEACH, FL. 33442-8101
TEL. (954) 698-6888 FAX. (954) 698-6889

revisions:

no	date	by	description
B	01.23.07		UPDATED FOR 2004 FBC
C	02.12.10		UPDATED FOR 2007 FBC
D	03.06.12		NO CHANGE THIS SHEET

date: 06-11-02
scale: 1/4" = 1"
dr. by: HAMID
chk. by:

drawing no.
W02-109

ANCHOR LOAD CAPACITY - PSF
EXT.(+) & INT.(-)

NOMINAL DIMS.		4 ANCHORS PER PLATE TYPE 'D'		6 ANCHORS PER PLATE TYPE 'D'	
WIDTH (W)	FRAME HEIGHT	3-1/4" EDGE DIST.	4" EDGE DIST.	3-1/4" EDGE DIST.	4" EDGE DIST.
36"	102"	135.0	135.0	135.0	135.0
39"		135.0	135.0	135.0	135.0
42"		135.0	135.0	135.0	135.0
45"		135.0	135.0	135.0	135.0
48"		135.0	135.0	135.0	135.0
51"		135.0	135.0	135.0	135.0
54"		135.0	135.0	135.0	135.0
57"		128.2	135.0	135.0	135.0
60"		121.8	135.0	135.0	135.0
63"		116.0	135.0	135.0	135.0
66"		110.7	135.0	135.0	135.0
69"		105.9	135.0	135.0	135.0
72"		101.5	129.7	135.0	135.0
36"	108"	135.0	135.0	135.0	135.0
39"		135.0	135.0	135.0	135.0
42"		135.0	135.0	135.0	135.0
45"		135.0	135.0	135.0	135.0
48"		135.0	135.0	135.0	135.0
51"		135.0	135.0	135.0	135.0
54"		127.8	135.0	135.0	135.0
57"		121.1	135.0	135.0	135.0
60"		115.0	135.0	135.0	135.0
63"		109.5	135.0	135.0	135.0
66"		104.6	133.7	135.0	135.0
69"		100.0	127.8	135.0	135.0
72"		95.9	122.5	135.0	135.0
36"	114"	135.0	135.0	135.0	135.0
39"		135.0	135.0	135.0	135.0
42"		135.0	135.0	135.0	135.0
45"		135.0	135.0	135.0	135.0
48"		135.0	135.0	135.0	135.0
51"		128.2	135.0	135.0	135.0
54"		121.1	135.0	135.0	135.0
57"		114.7	135.0	135.0	135.0
60"		109.0	135.0	135.0	135.0
63"		103.8	132.7	135.0	135.0
66"		99.1	126.6	135.0	135.0
69"		94.8	121.1	135.0	135.0
72"		90.8	116.1	135.0	135.0
36"	120"	135.0	135.0	135.0	135.0
39"		135.0	135.0	135.0	135.0
42"		135.0	135.0	135.0	135.0
45"		135.0	135.0	135.0	135.0
48"		129.4	135.0	135.0	135.0
51"		121.8	135.0	135.0	135.0
54"		115.0	135.0	135.0	135.0
57"		109.0	135.0	135.0	135.0
60"		103.5	132.3	135.0	135.0
63"		98.6	126.0	135.0	135.0
66"		94.1	120.3	135.0	135.0
69"		90.0	115.1	135.0	135.0
72"		86.3	110.3	129.4	135.0

ANCHOR LOAD CAPACITY - PSF
EXT.(+) & INT.(-)

NOMINAL DIMS.		4 ANCHORS PER PLATE TYPE 'D'		6 ANCHORS PER PLATE TYPE 'D'	
WIDTH (W)	FRAME HEIGHT	3-1/4" EDGE DIST.	4" EDGE DIST.	3-1/4" EDGE DIST.	4" EDGE DIST.
36"	126"	135.0	135.0	135.0	135.0
39"		135.0	135.0	135.0	135.0
42"		135.0	135.0	135.0	135.0
45"		131.5	135.0	135.0	135.0
48"		123.2	135.0	135.0	135.0
51"		116.0	135.0	135.0	135.0
54"		109.5	135.0	135.0	135.0
57"		103.8	132.7	135.0	135.0
60"		98.6	126.0	135.0	135.0
63"		93.9	120.0	135.0	135.0
66"		89.6	114.6	134.4	135.0
69"		85.7	109.6	128.6	135.0
72"		82.2	105.0	123.2	135.0
36"	132"	135.0	135.0	135.0	135.0
39"		135.0	135.0	135.0	135.0
42"		134.4	135.0	135.0	135.0
45"		125.5	135.0	135.0	135.0
48"		117.6	135.0	135.0	135.0
51"		110.7	135.0	135.0	135.0
54"		104.6	133.7	135.0	135.0
57"		99.1	126.6	135.0	135.0
60"		94.1	120.3	135.0	135.0
63"		89.6	114.6	134.4	135.0
66"		85.6	109.4	128.3	135.0
69"		81.8	104.6	122.8	135.0
72"		78.4	100.2	117.6	135.0
36"	138"	135.0	135.0	135.0	135.0
39"		135.0	135.0	135.0	135.0
42"		128.6	135.0	135.0	135.0
45"		120.0	135.0	135.0	135.0
48"		112.5	135.0	135.0	135.0
51"		105.9	135.0	135.0	135.0
54"		100.0	127.8	135.0	135.0
57"		94.8	121.1	135.0	135.0
60"		90.0	115.1	135.0	135.0
63"		85.7	109.6	128.6	135.0
66"		81.8	104.6	122.8	135.0
69"		78.3	100.1	117.4	135.0
72"		75.0	95.9	112.5	135.0
36"	144"	135.0	135.0	135.0	135.0
39"		132.7	135.0	135.0	135.0
42"		123.2	135.0	135.0	135.0
45"		115.0	135.0	135.0	135.0
48"		107.8	135.0	135.0	135.0
51"		101.5	129.7	135.0	135.0
54"		95.9	122.5	135.0	135.0
57"		90.0	116.1	135.0	135.0
60"		86.3	110.3	129.4	135.0
63"		82.2	105.0	123.2	135.0
66"		78.4	100.2	117.6	135.0
69"		75.0	95.9	112.5	135.0

ANCHOR LOAD CAPACITY - PSF
EXT.(+) & INT.(-)

NOMINAL DIMS.		4 ANCHORS PER PLATE TYPE 'D'		6 ANCHORS PER PLATE TYPE 'D'	
WIDTH (W)	FRAME HEIGHT	3-1/4" EDGE DIST.	4" EDGE DIST.	3-1/4" EDGE DIST.	4" EDGE DIST.
36"	150"	135.0	135.0	135.0	135.0
39"		127.4	135.0	135.0	135.0
42"		118.3	135.0	135.0	135.0
45"		110.4	135.0	135.0	135.0
48"		103.5	132.3	135.0	135.0
51"		97.4	124.5	135.0	135.0
54"		92.0	117.6	135.0	135.0
57"		87.2	111.4	130.8	135.0
60"		82.8	105.9	124.2	135.0
63"		78.9	100.8	118.3	135.0
66"		75.3	96.2	112.9	135.0
36"	156"	132.7	135.0	135.0	135.0
39"		122.5	135.0	135.0	135.0
42"		113.8	135.0	135.0	135.0
45"		106.2	135.0	135.0	135.0
48"		99.5	127.2	135.0	135.0
51"		93.7	119.7	135.0	135.0
54"		88.5	113.1	132.7	135.0
57"		83.8	107.1	125.7	135.0
60"		79.6	101.8	119.4	135.0
63"		75.8	96.9	113.8	135.0
36"	162"	127.8	135.0	135.0	135.0
39"		118.0	135.0	135.0	135.0
42"		109.5	135.0	135.0	135.0
45"		102.2	130.7	135.0	135.0
48"		95.9	122.5	135.0	135.0
51"		90.2	115.3	135.0	135.0
54"		85.2	108.9	127.8	135.0
57"		80.7	103.2	121.1	135.0
60"		76.7	98.0	115.0	135.0
36"	168"	123.2	135.0	135.0	135.0
39"		113.8	135.0	135.0	135.0
42"		105.6	135.0	135.0	135.0
45"		98.6	126.0	135.0	135.0
48"		92.4	118.1	135.0	135.0
51"		87.0	111.2	130.5	135.0
54"		82.2	105.0	123.2	135.0
57"		77.8	99.5	116.8	135.0
60"		73.9	94.5	110.9	135.0

PRODUCT REVISED
as complying with the Florida
Building Code
Acceptance No 12-0517.21
Expiration/Date 06/26/2013
By
Miami Dade Product Control

Engr: JAVAD AHMAD
CIVIL
FLA. PE # 70592
C.A.N. 3538

MAR 08 2012

AL-FAROOQ CORPORATION
ENGINEERS & PRODUCT DEVELOPMENT
1235 S.W. 87 AVE
MIAMI, FLORIDA 33174
TEL. (305) 264-8100 FAX. (305) 262-6978

STORE\W02-109CTC

PRO-TECH 7 ALUM CURTAIN WALL SYSTEM

CRAWFORD TRACEY CORPORATION
3301 SW 13TH DRIVE
DEERFIELD BEACH, FL. 33442-8101
TEL. (954) 698-6888 FAX. (954) 698-6889

revisions:

no	date	by	description
B	01.23.07		UPDATED FOR 2004 FBC
C	02.12.10		UPDATED FOR 2007 FBC
D	03.06.12		NO CHANGE THIS SHEET

date: 06-11-02
scale: 1/4" = 1"
dr. by: HAMID
chk. by:

drawing no.
W02-109

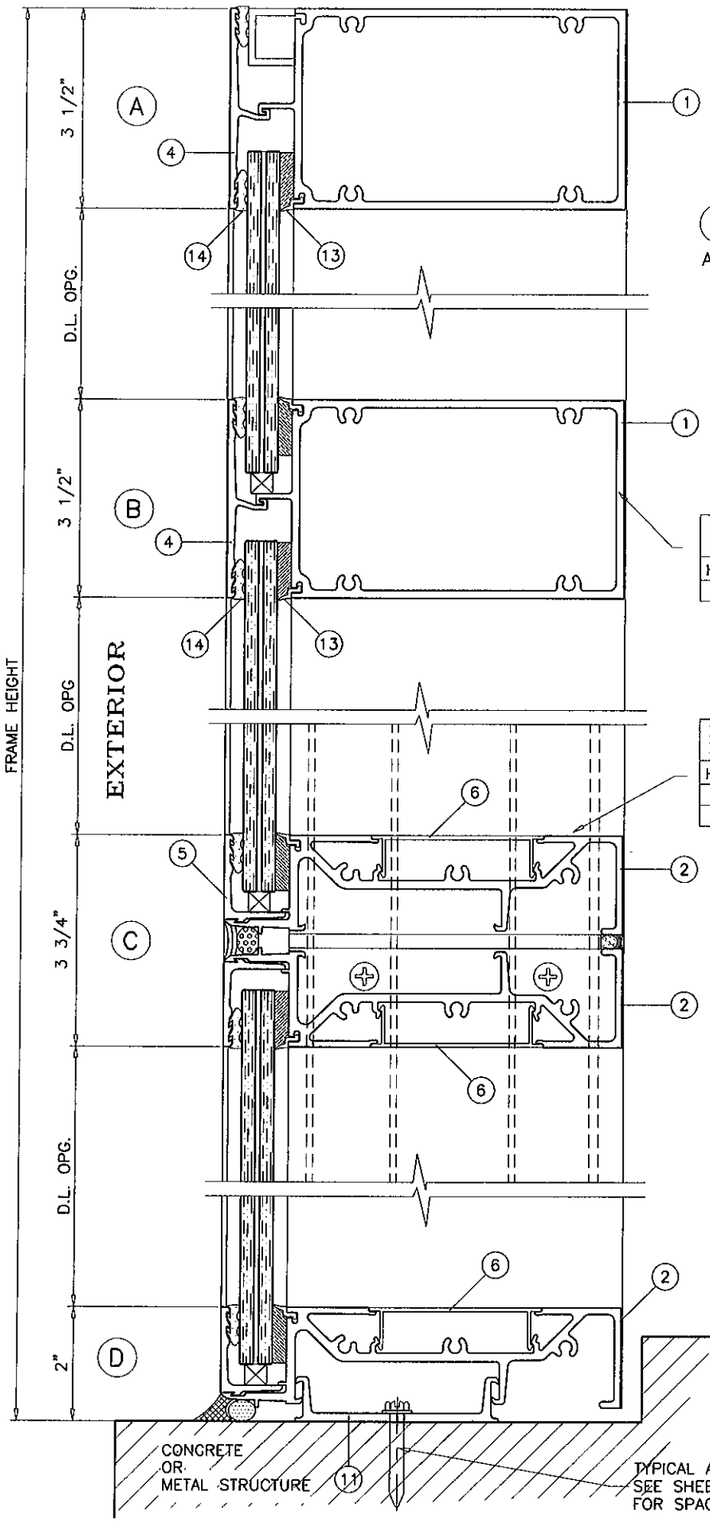

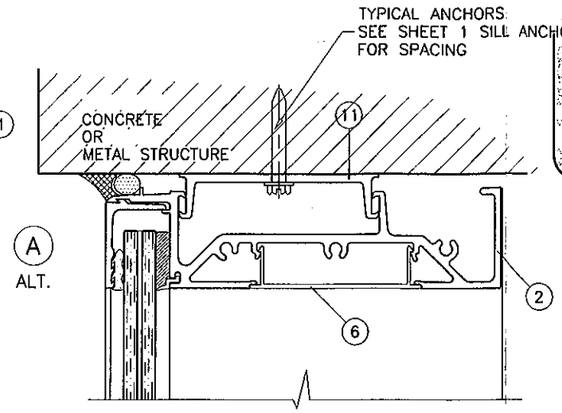

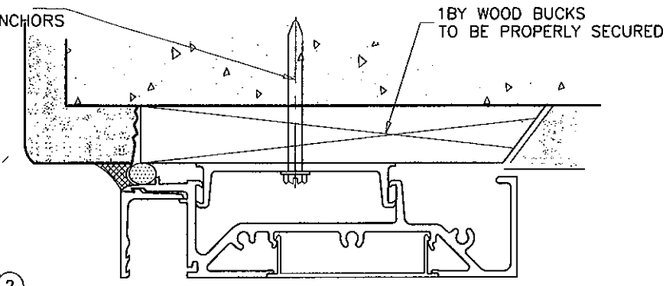

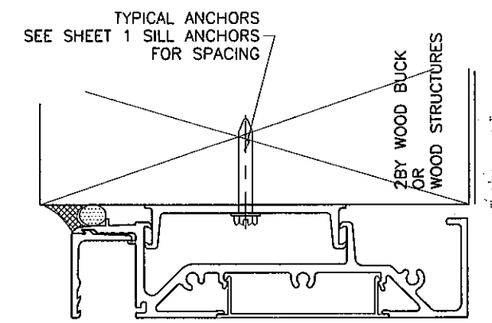

LIMIT MAX. DESIGN LOADS FOR THIS HORIZONTAL AS FOLLOWS	
HORIZ. SPAN MAX.	LAM. GLASS
72"	170 SF

LIMIT MAX. DESIGN LOADS FOR THIS HORIZONTAL AS FOLLOWS	
HORIZ. SPAN MAX.	LAM. GLASS
66"	120 PSF
72"	100 PSF

TYPICAL ANCHORS: SEE ELEV. FOR SPACING
AT HEAD, SILL AND JAMBS

TYPE 'A'– 5/16" DIA. ULTRACON BY 'ELCO' (Fu=177 KSI, Fy=155 KSI)
INTO 2BY WOOD BUCKS OR WOOD STRUCTURES
1–3/8" MIN. PENETRATION INTO WOOD

THRU 1BY BUCKS INTO CONC. OR MASONRY
1–1/4" MIN. EMBED INTO CONC. OR MASONRY

TYPE 'B'– 1/4" DIA. ULTRACON BY 'ELCO' (Fu=177 KSI, Fy=155 KSI)
DIRECTLY INTO CONC. OR MASONRY
1–5/8" MIN. EMBED INTO CONC. OR MASONRY

TYPE 'C'– #14 SMS OR SELF DRILLING SCREWS (GRADE 2 CRS)
INTO METAL STRUCTURES
STEEL : 12 GA. MIN. (Fy = 36 KSI MIN.)
ALUMINUM : 1/8" THK. MIN. (6063–T5 MIN.)
(STEEL IN CONTACT WITH ALUMINUM TO BE PLATED OR PAINTED)

TYPICAL EDGE DISTANCE
INTO CONCRETE AND MASONRY = 2–1/2" MIN.
INTO WOOD STRUCTURE = 1" MIN.
INTO METAL STRUCTURE = 3/4" MIN.

CONCRETE AT HEAD, SILL OR JAMBS f'c = 3000 PSI MIN.
C–90 HOLLOW/FILLED BLOCK AT JAMBS f'm = 2000 PSI MIN.

TYPE 'D'– SEE SHEET 8

PRODUCT REVISED
as complying with the Florida Building Code
Acceptance No 12-0517.21
Expiration Date 06/26/2013
By
Miami Dade Product Control

WOOD BUCKS AND METAL STRUCTURES NOT BY CRAWFORD TRACEY MUST SUPPORT LOADS IMPOSED BY GLAZING SYSTEM AND TRANSFER THEM TO THE BUILDING STRUCTURE.

Engr: JAVAD AHMAD
CIVIL
FLA. PE # 70592
C.A.N. 3538

MAR 08 2012

AL-FAROOQ CORPORATION
ENGINEERS & PRODUCT DEVELOPMENT
1235 S.W. 87 AVE
MIAMI, FLORIDA 33174
TEL. (305) 264-8100 FAX. (305) 262-6978
STORE\W02-109CTC

PRO-TECH 7 ALUM CURTAIN WALL SYSTEM

CRAWFORD TRACEY CORPORATION
3301 SW 13TH DRIVE
DEERFIELD BEACH, FL. 33442-8101
TEL. (954) 698-6888 FAX. (954) 698-6889

revisions:

no	date	by	description
A	5.27.03		NO CHANGE THIS SHEET
B	01.23.07		UPDATED FOR 2004 FBC
C	02.12.10		UPDATED FOR 2007 FBC
D	03.06.12		NO CHANGE THIS SHEET

date: 06-11-02
scale: 3/8" = 1"
dr. by: HAMID
chk. by:

drawing no.
W02-109

sheet 10 of 15

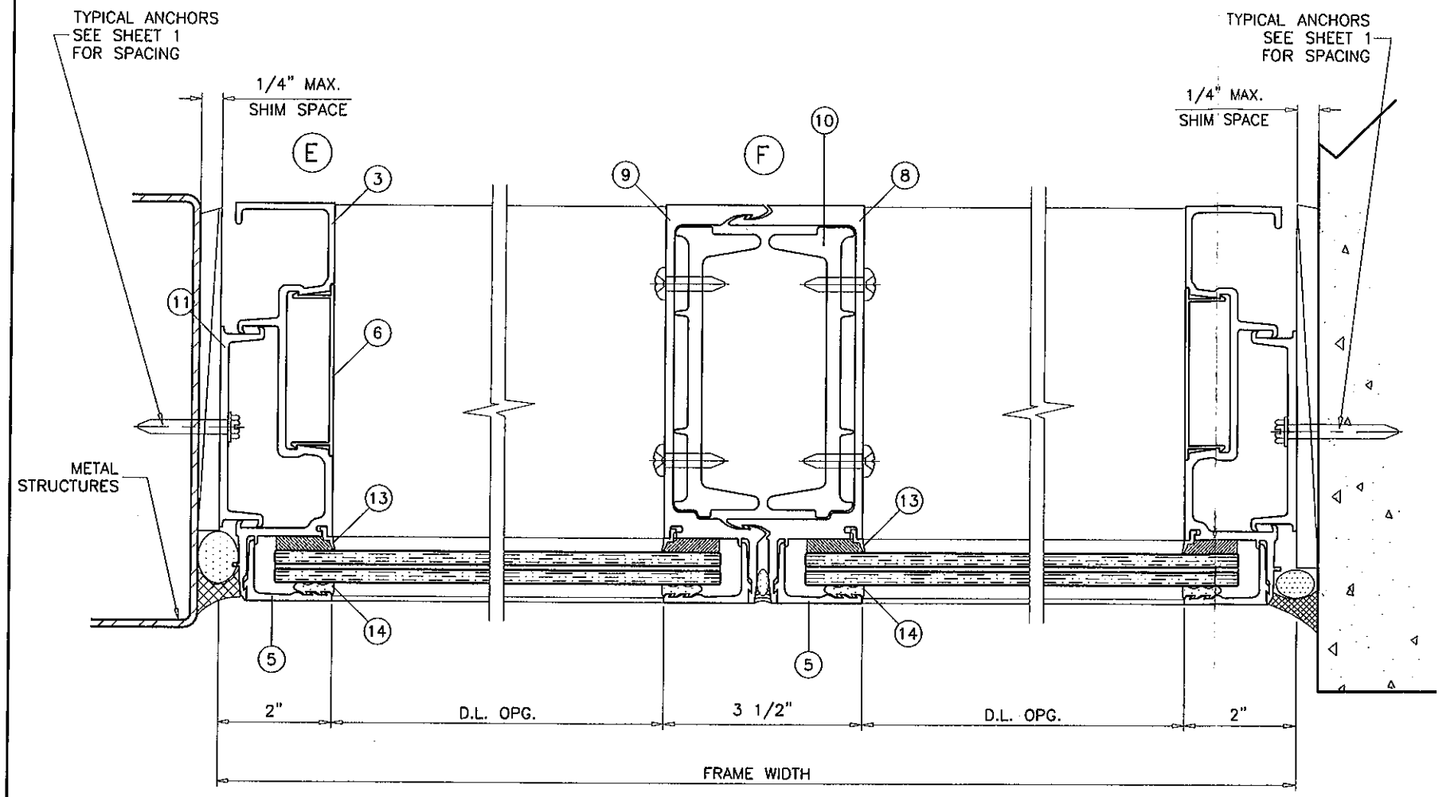

EXTERIOR

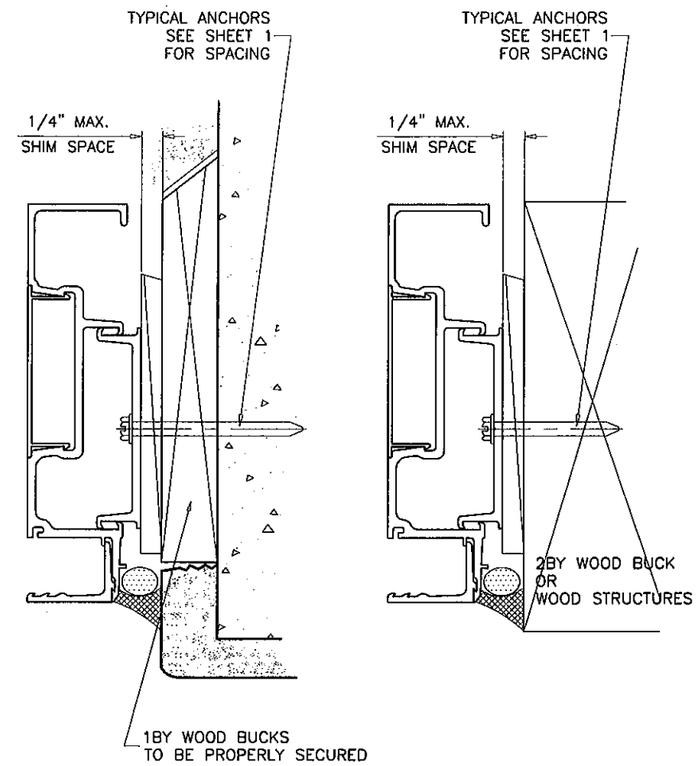

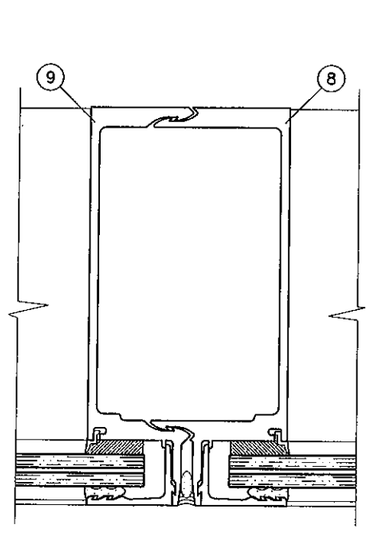

SINGLE SPAN MULLION
WITHOUT REINF.

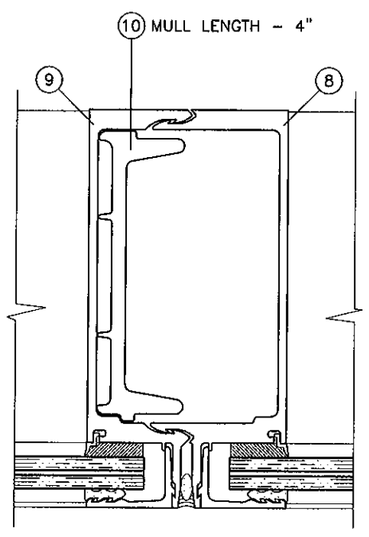

SINGLE SPAN MULLION
ONE ALUM REINF.

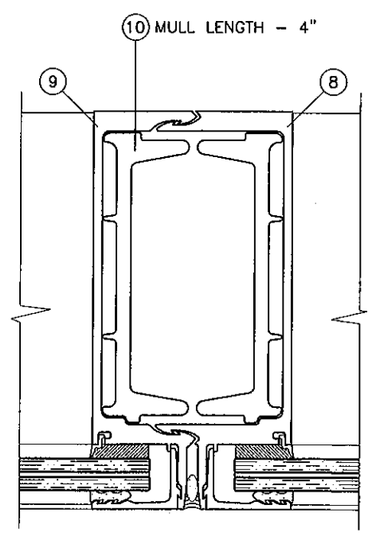

SINGLE SPAN MULLION
TWO ALUM REINF.

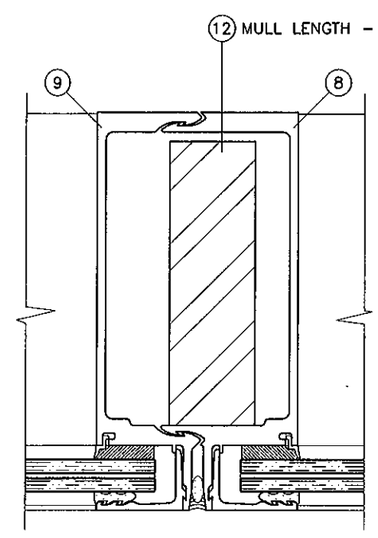

SINGLE SPAN MULLION
STEEL REINFORCING

PRODUCT REVISED
as complying with the Florida
Building Code
Acceptance No 12-0517.21
Expiration Date 06/26/2013
By
Miami Dade Product Control

Engr: JAVAD AHMAD
CIVIL
FLA. PE # 70592
C.A.N. 3538

MAR 08 2012

AL-FAROOQ CORPORATION
ENGINEERS & PRODUCT DEVELOPMENT
1235 S.W. 87 AVE
MIAMI, FLORIDA 33174
TEL. (305) 264-8100 FAX. (305) 262-6978
STORE\W02-109CTC

PRO-TECH 7 ALUM CURTAIN WALL SYSTEM

CRAWFORD TRACEY CORPORATION
3301 SW 13TH DRIVE
DEERFIELD BEACH, FL. 33442-8101
TEL. (954) 698-6888 FAX. (954) 698-6889

revisions:

no	date	by	description
A	5.27.03		NO CHANGE THIS SHEET
B	01.23.07		UPDATED FOR 2004 FBC
C	02.12.10		NO CHANGE THIS SHEET
D	03.06.12		NO CHANGE THIS SHEET

date: 06-11-02
scale: 3/8" = 1"
dr. by: HAMID
chk. by:

drawing no.
W02-109

sheet 11 of 15

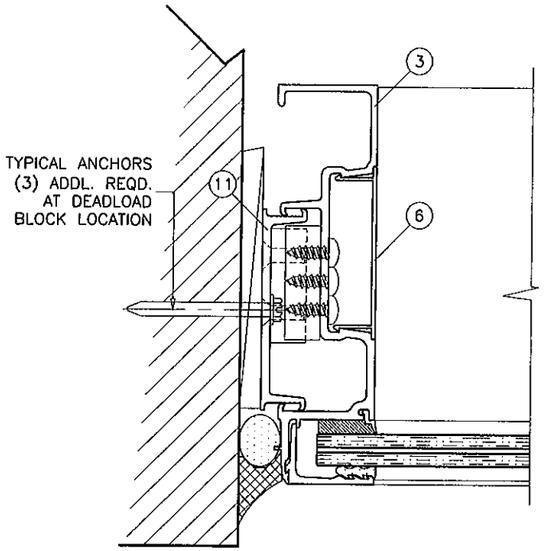

ITEM NO.	PART NO.	QUANTITY	DESCRIPTION	MATERIAL	MANF./SUPPLIER/REMARKS
1	170H340	AS REQD.	FRAME HORIZONTAL	6063-T6/6005A-T61	–
2	170P175	AS REQD.	FRAME SILL	6063-T6/6005A-T61	–
3	170J175	AS REQD.	FRAME JAMB	6063-T6/6005A-T61	–
4	162F340	AS REQD.	GLAZING ADAPTER	6063-T6/6005A-T61	–
5	162F111	AS REQD.	GLAZING ADAPTER	6063-T6/6005A-T61	–
6	T30U119	AS REQD.	SNAP IN COVER	6063-T6/6005A-T61	–
7	170J175	AS REQD.	FRAME JAMB	6063-T6/6005A-T61	–
8	170M111	AS REQD.	MALE MULLION	6005-T5/6005A-T61	–
9	170M112	AS REQD.	FEMALE MULLION	6005-T5/6005A-T61	–
10	170R140	AS REQD.	SPLICE/MULLION REINF./ANCHOR REINF.	6063-T6/6005A-T61	–
11	B32B070	AS REQD.	SUB-BUCK	6105-T5/6005A-T61	–
12	–	AS REQD.	STEEL REINFORCING	–	–
13	#2	AS REQD.	GLAZING SPACER	POLYPROPYLENE	–
14	#5	AS REQD.	EXTERIOR GASKET	VINYL	–
15	1/4"X1-1/4"	AS REQD.	FRAME ASSEMBLY SCREWS	ST. STEEL	PAN HEAD PHILLIPS
16	–	–	–	–	–

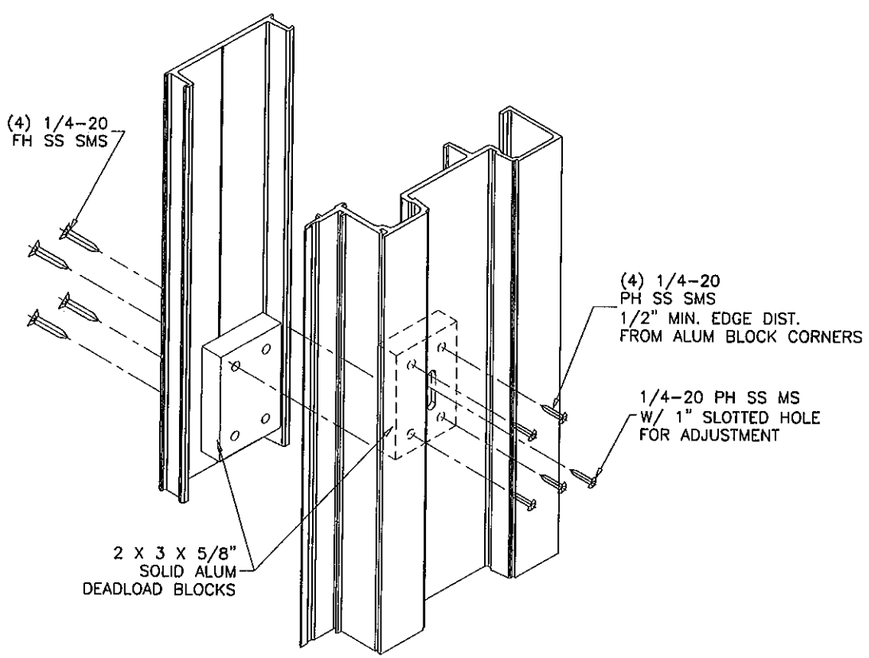

DEADLOAD BLOCKS DETAIL
TYPICAL JAMBS

PRODUCT REVISED
as complying with the Florida
Building Code
Acceptance No 12-0517.21
Expiration Date 06/26/2013
By
Miami Dade Product Control

Engr: JAVAD AHMAD
CIVIL
FLA. PE # 70592
C.A.N. 3538

MAR 08 2012

AL-FAROOQ CORPORATION
ENGINEERS & PRODUCT DEVELOPMENT
1235 S.W. 87 AVE
MIAMI, FLORIDA 33174
TEL. (305) 264-8100 FAX. (305) 262-6978
STORE\W02-109CTC

PRO-TECH 7 ALUM CURTAIN WALL SYSTEM

CRAWFORD TRACEY CORPORATION
3301 SW 13TH DRIVE
DEERFIELD BEACH, FL. 33442-8101
TEL. (954) 698-6888 FAX. (954) 698-6889

revisions:

no	date	by	description
B	01.23.07		UPDATED FOR 2004 FBC
C	02.12.10		NO CHANGE THIS SHEET
D	03.06.12		UPDATED TO 2010 FBC

date: 06-11-02
scale: 3/8" = 1"
dr. by: HAMID
chk. by:

drawing no.
W02-109

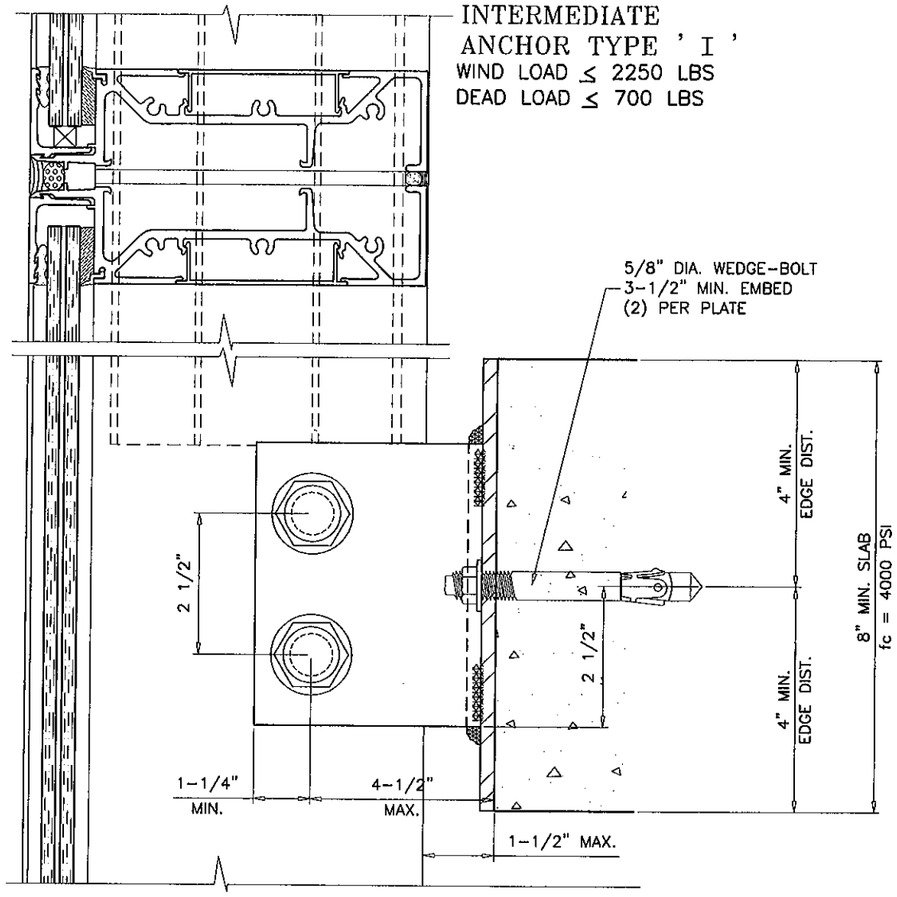

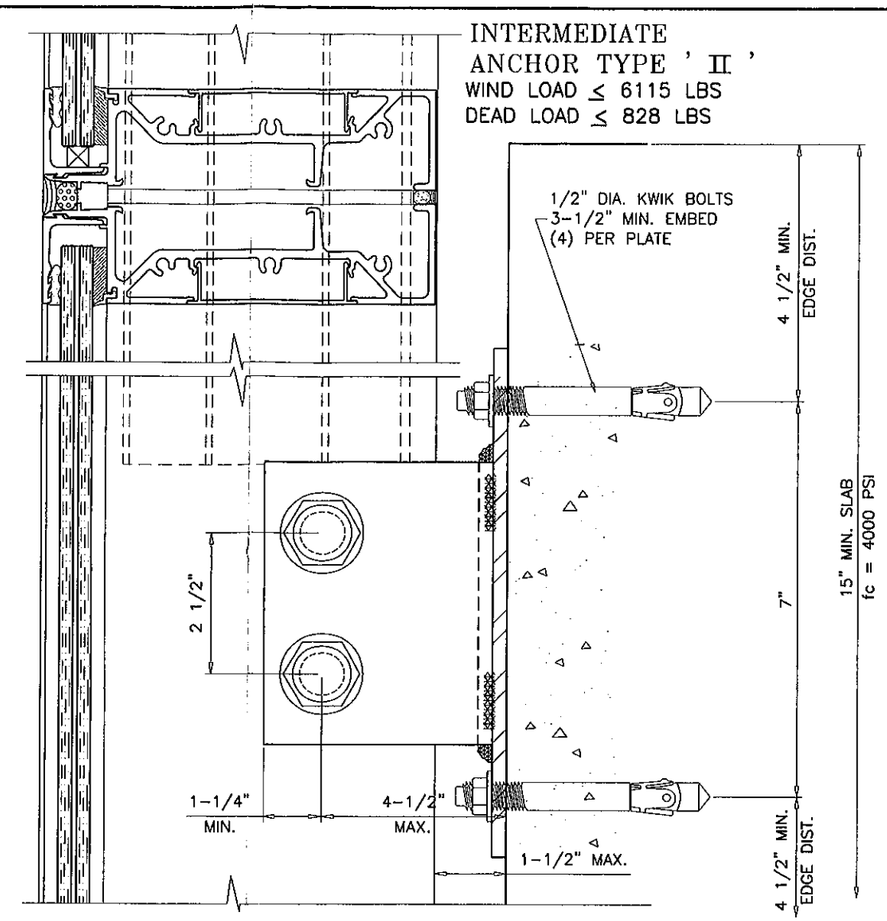

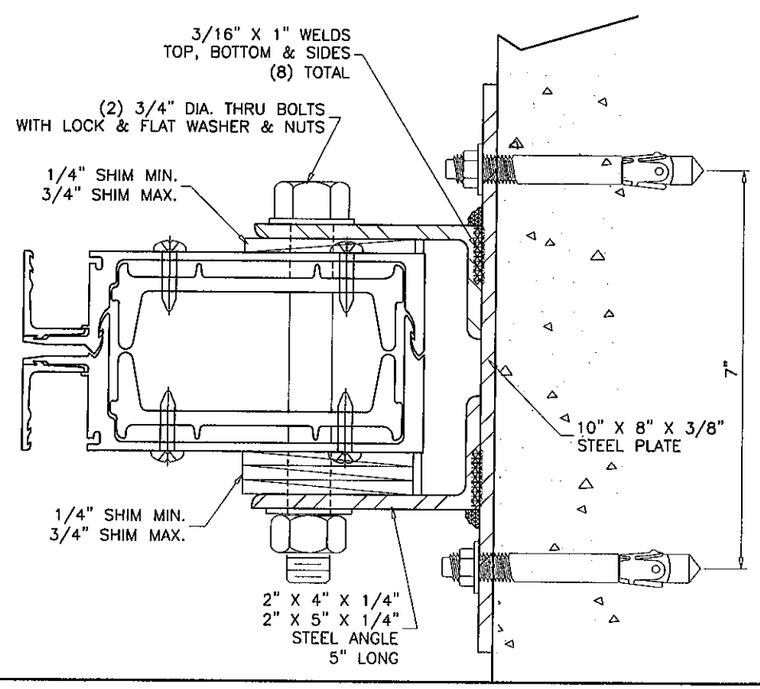

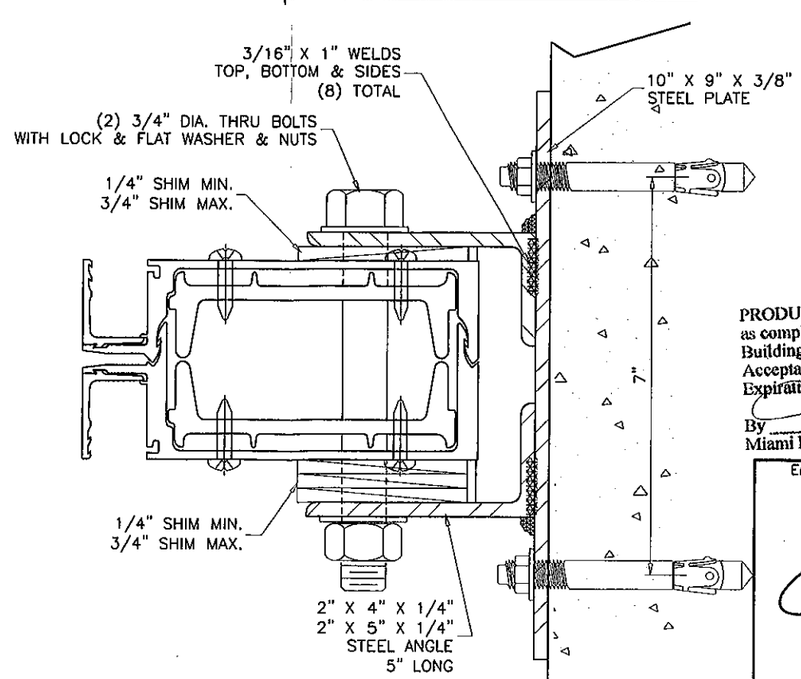

MIN. CONC. fc' = 4000 PSI

PRODUCT REVISED
as complying with the Florida
Building Code
Acceptance No 12-0517.21
Expiration Date 06/26/2013
By
Miami Dade Product Control

Engr: JAVAD AHMAD
CIVIL
FLA. PE # 70592
C.A.N. 3538

MAR 08 2012

AL-FAROOQ CORPORATION
ENGINEERS & PRODUCT DEVELOPMENT
1235 S.W. 87 AVE
MIAMI, FLORIDA 33174
TEL. (305) 264-8100 FAX. (305) 262-6978

STORE\W02-109CTC

PRO-TECH 7 ALUM CURTAIN WALL SYSTEM

CRAWFORD TRACEY CORPORATION
3301 SW 13TH DRIVE
DEERFIELD BEACH, FL. 33442-8101
TEL. (954) 698-6888 FAX. (954) 698-6889

revisions:

no	date	by	description
A	5.27.03		NO CHANGE THIS SHEET
B	01.23.07		UPDATED FOR 2004 FBC
C	02.12.10		UPDATED FOR 2007 FBC
D	03.06.12		NO CHANGE THIS SHEET

date: 06-11-02
scale: 3/8" = 1"
dr. by: HAMID
chk. by:

drawing no.
W02-109

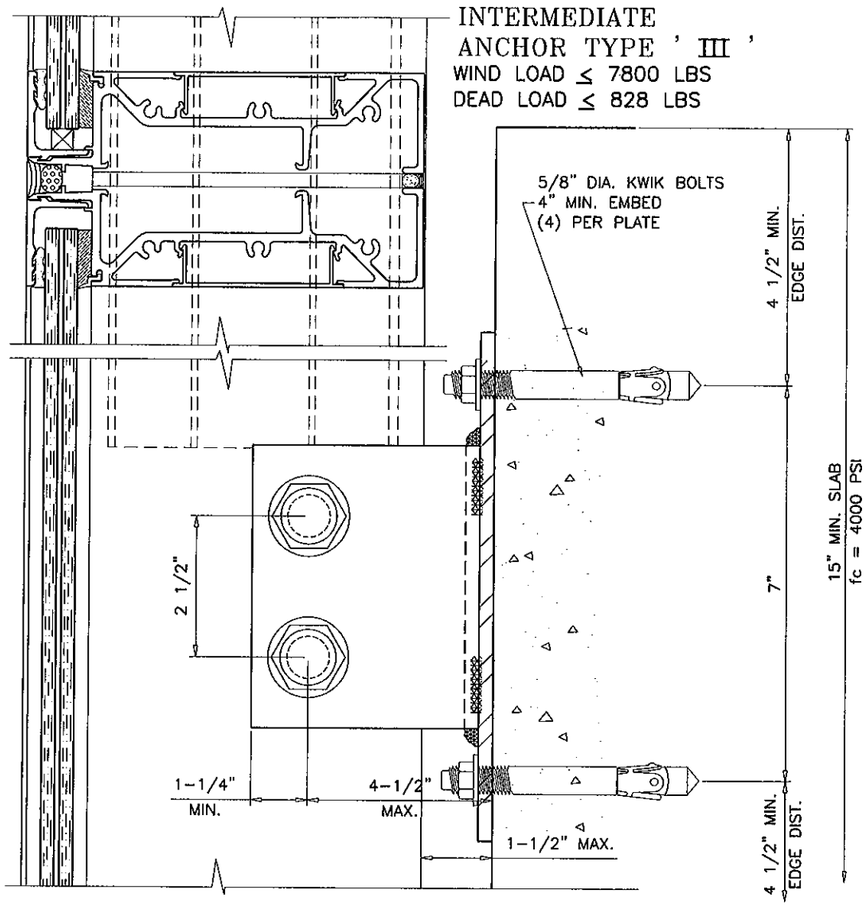

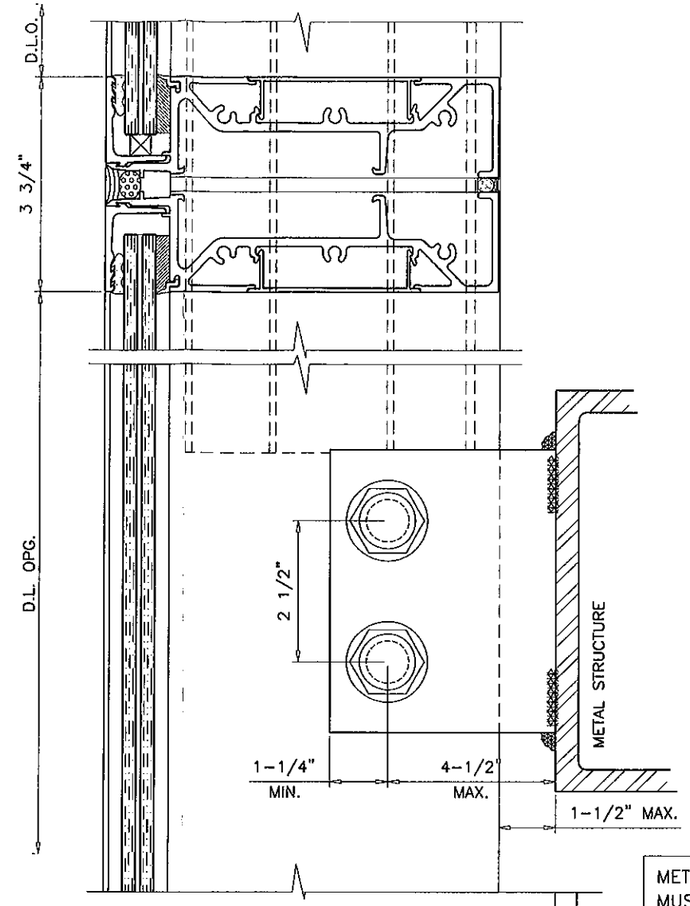

INTERMEDIATE
ANCHOR TYPE ' IV '
WIND LOAD ≤ 8800 LBS
DEAD LOAD ≤ 828 LBS

METAL STRUCTURES NOT BY CRAWFORD TRACEY, MUST SUPPORT LOADS IMPOSED BY GLAZING SYSTEM AND TRANSFER THEM TO THE BUILDING STRUCTURE.

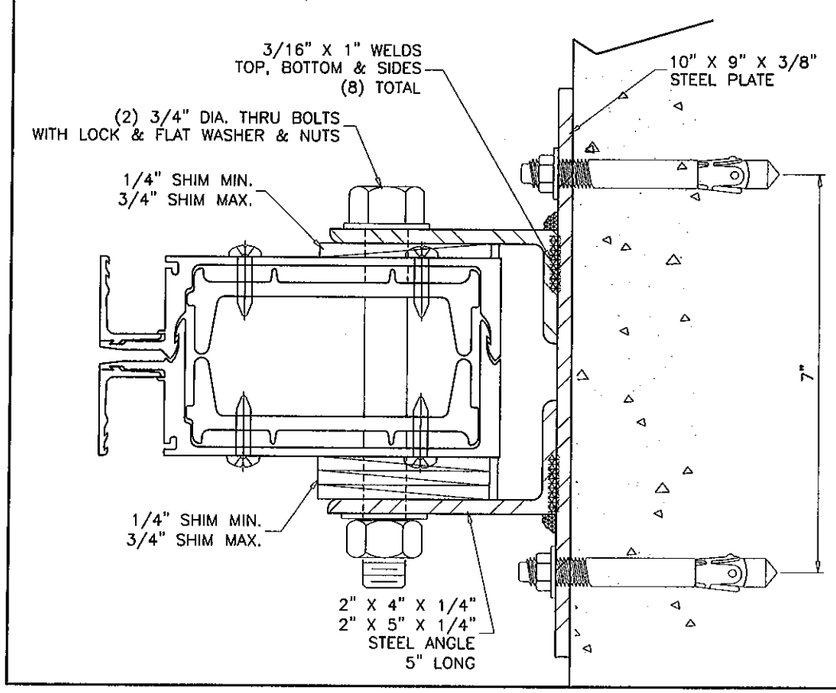

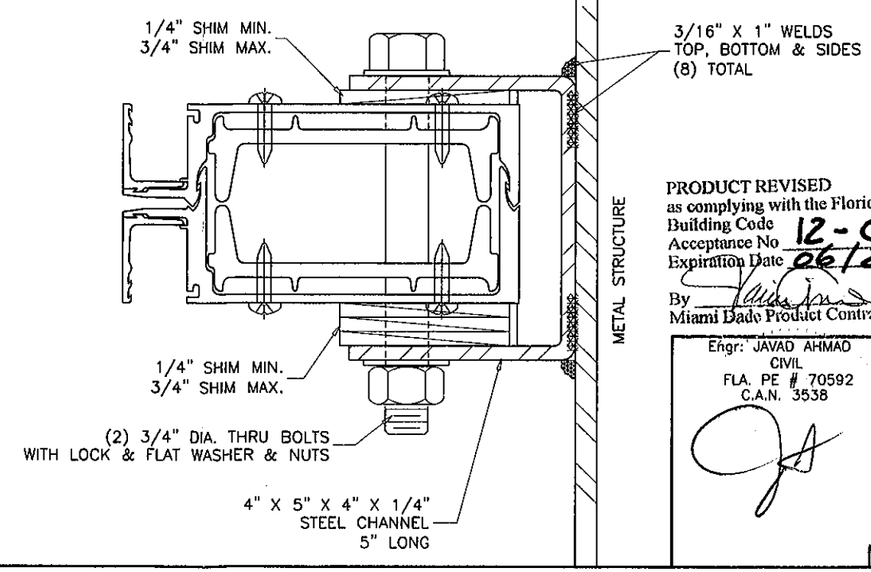

PRODUCT REVISED
as complying with the Florida
Building Code
Acceptance No 12-0517.21
Expiration Date 06/26/2013
By
Miami Dade Product Control

Engr: JAVAD AHMAD
CIVIL
FLA. PE # 70592
C.A.N. 3538

MAR 08 2012

AL-FAROOQ CORPORATION
ENGINEERS & PRODUCT DEVELOPMENT
1235 S.W. 87 AVE
MIAMI, FLORIDA 33174
TEL. (305) 264-8100 FAX. (305) 262-6978
STORE\W02-109CTC

PRO-TECH 7 ALUM CURTAIN WALL SYSTEM
CRAWFORD TRACEY CORPORATION
3301 SW 13TH DRIVE
DEERFIELD BEACH, FL. 33442-8101
TEL. (954) 698-6888 FAX. (954) 698-6889

revisions:

no	date	by	description
A	5.27.03		NO CHANGE THIS SHEET
B	01.23.07		UPDATED FOR 2004 FBC
C	02.12.10		NO CHANGE THIS SHEET
D	03.06.12		NO CHANGE THIS SHEET

date: 06-11-02
scale: 3/8" = 1"
dr. by: HAMID
chk. by:

drawing no.
W02-109

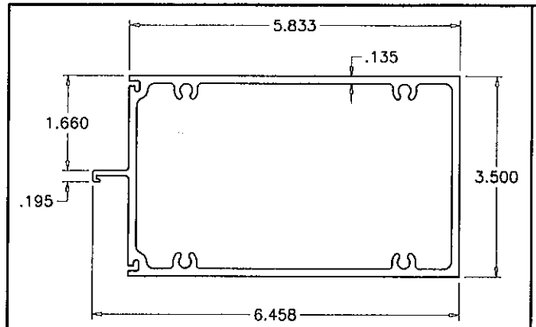

FRAME HEAD/HORIZONTAL

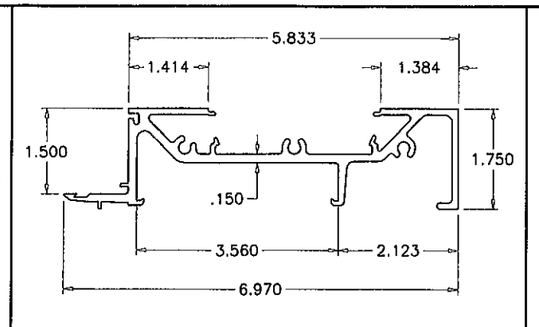

FRAME SILL

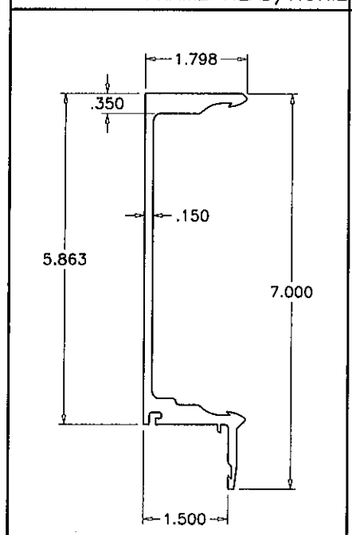

FEMALE MULLION

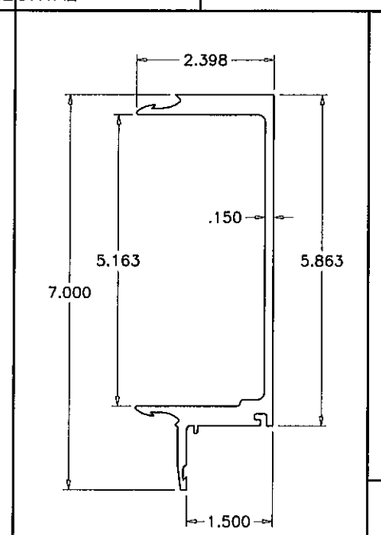

MALE MULLION

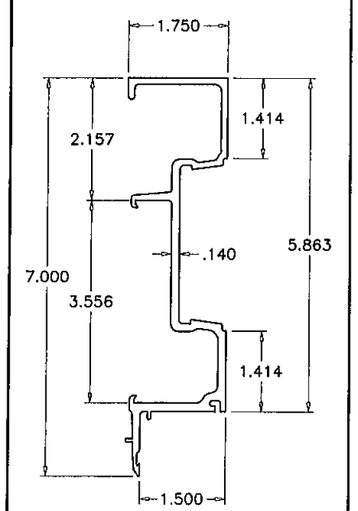

FRAME JAMB

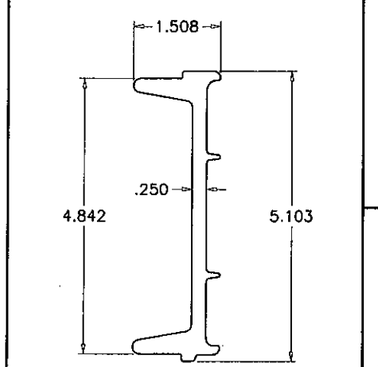

SPLICE
MULLION REINFORCING
ANCHOR REINFORCING

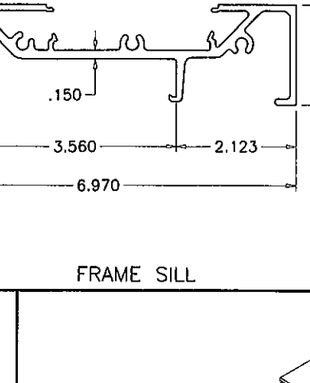

STEEL REINFORCING

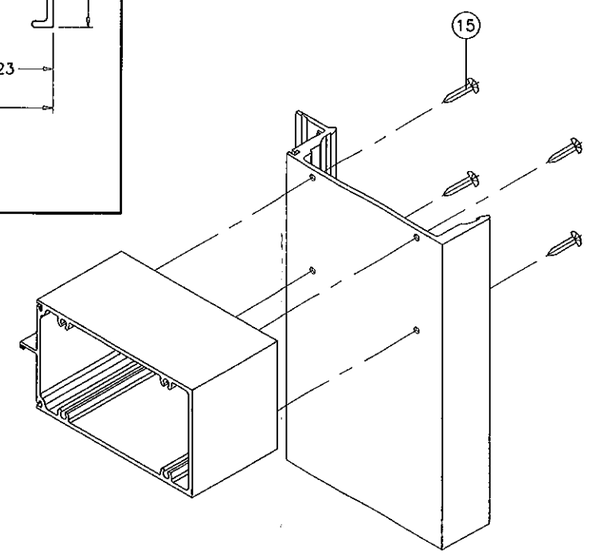

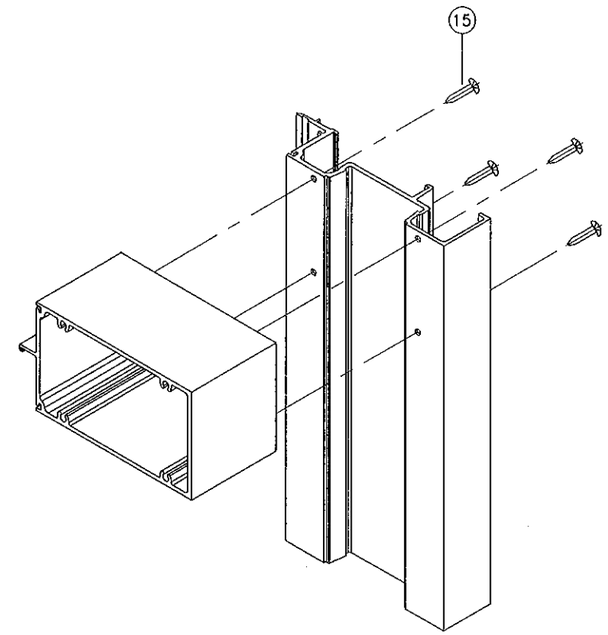

FRAME CORNERS

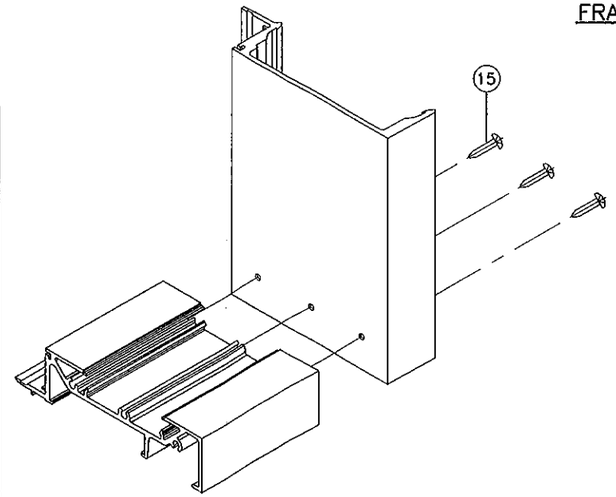

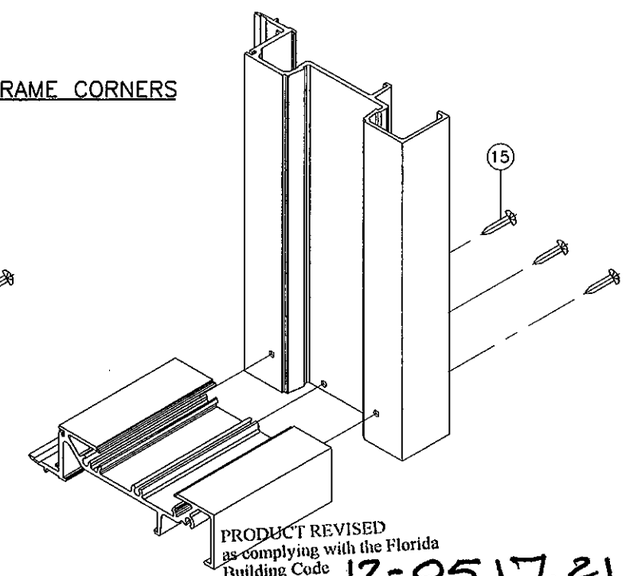

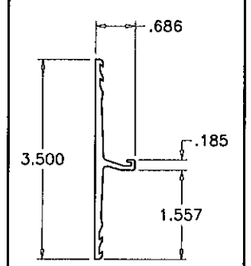

PRESSURE PLATE

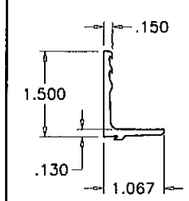

GLASS STOP

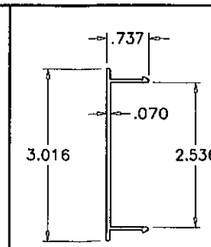

FRAME COVER

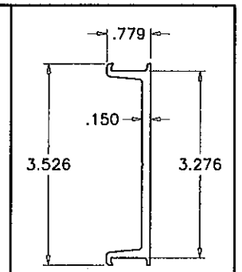

SUB-BUCK

PRODUCT REVISED
as complying with the Florida
Building Code
Acceptance No 12-0517.21
Expiration Date 06/26/2013
By
Miami Dade Product Control

Engr: JAVAD AHMAD
CIVIL
FLA. PE # 70592
C.A.N. 3538

MAR 08 2012

AL-FAROOQ CORPORATION
ENGINEERS & PRODUCT DEVELOPMENT
1235 S.W. 87 AVE
MIAMI, FLORIDA 33174
TEL. (305) 264-8100 FAX. (305) 262-6978
STORE\W02-109CTC

PRO-TECH 7 ALUM CURTAIN WALL SYSTEM

CRAWFORD TRACEY CORPORATION
3301 SW 13TH DRIVE
DEERFIELD BEACH, FL. 33442-8101
TEL. (954) 698-6888 FAX. (954) 698-6889

revisions:

no	date	by	description
A	5.27.03		NO CHANGE THIS SHEET
B	01.23.07		UPDATED FOR 2004 FBC
C	02.12.10		NO CHANGE THIS SHEET
D	03.06.12		NO CHANGE THIS SHEET

date: 06-11-02
scale: 3/8" = 1"
dr. by: HAMID
chk. by:

drawing no.
W02-109

sheet 15 of 15