MIAMI-DADE COUNTY
PRODUCT CONTROL SECTION
11805 SW 26 Street, Room 208
Miami, Florida 33175-2474
T (786) 315-2590 F (786) 315-2599
www.miamidade.gov/economy

DEPARTMENT OF REGULATORY AND ECONOMIC RESOURCES (RER)
BOARD AND CODE ADMINISTRATION DIVISION

NOTICE OF ACCEPTANCE (NOA)

Western Window System, LLC
562 South 25th Street
Phoenix, AZ 85040

SCOPE:

This NOA is being issued under the applicable rules and regulations governing the use of construction materials. The documentation submitted has been reviewed and accepted by Miami-Dade County RER - Product Control Section to be used in Miami Dade County and other areas where allowed by the Authority Having Jurisdiction (AHJ).

This NOA shall not be valid after the expiration date stated below. The Miami-Dade County Product Control Section (In Miami Dade County) and/or the AHJ (in areas other than Miami Dade County) reserve the right to have this product or material tested for quality assurance purposes. If this product or material fails to perform in the accepted manner, the manufacturer will incur the expense of such testing and the AHJ may immediately revoke, modify, or suspend the use of such product or material within their jurisdiction. RER reserves the right to revoke this acceptance, if it is determined by Miami-Dade County Product Control Section that this product or material fails to meet the requirements of the applicable building code.

This product is approved as described herein, and has been designed to comply with the Florida Building Code, including the High Velocity Hurricane Zone.

DESCRIPTION: Series "9500" Alum (Thermal & Non-thermal broken) In-Folding Door-L.M.I.

APPROVAL DOCUMENT: Drawing No. **WWS001**, titled "9500 Hurricane Inswing Bi-folding Door, sheets 1 through 14 of 14, dated 03/14/12 and last revised on 02-07-2013, prepared by Building Drops Inc., signed and sealed by Hermes F. Norero, P.E., bearing the Miami-Dade County Product Control Approval stamp with the Notice of Acceptance number and approval date by the Miami-Dade County Product Control Section.

MISSILE IMPACT RATING: Large and Small Missile Impact Resistant

Limitations:

1. See unit size Vs Design Pressure (DP) in sheet 9.
2. See Recess U-channel threshold application and installation in wood or concrete substrate in sheet 14.

LABELING: Each unit shall bear a permanent label with the manufacturer's name or logo, city, state and series and following statement: "Miami-Dade County Product Control Approved", noted herein.

RENEWAL of this NOA shall be considered after a renewal application has been filed and there has been no change in the applicable building code negatively affecting the performance of this product.

TERMINATION of this NOA will occur after the expiration date or if there has been a revision or change in the materials, use, and/or manufacture of the product or process. Misuse of this NOA as an endorsement of any product, for sales, advertising or any other purposes shall automatically terminate this NOA. Failure to comply with any section of this NOA shall be cause for termination and removal of NOA.

ADVERTISEMENT: The NOA number preceded by the words Miami-Dade County, Florida, and followed by the expiration date may be displayed in advertising literature. If any portion of the NOA is displayed, then it shall be done in its entirety.

INSPECTION: A copy of this entire NOA shall be provided to the user by the manufacturer or its distributors and shall be available for inspection at the job site at the request of the Building Official.

This NOA consists of this page 1 and evidence pages E-1, as well as approval document mentioned above.

The submitted documentation was reviewed by **Ishaq I. Chanda, P.E.**

MIAMI-DADE COUNTY APPROVED
3/14/13

NOTICE OF ACCEPTANCE: EVIDENCE SUBMITTED

A. DRAWINGS

1. Manufacturer's die drawings and sections
2. Drawing No. **WWS001**, titled "9500 Hurricane Inswing Bi-folding Door, sheets 1 through 14 of 14, dated 03/14/12 and last revised on 02-07-2013 prepared by Building Drops Inc., signed and sealed by Hermes F. Norero. P. E.

B. TESTS

1. Test reports on: 1) Air Infiltration Test, per FBC, TAS 202-94
   2) Uniform Static Air Pressure Test, Loading per FBC TAS 202-94
   3) Water Resistance Test, per FBC, TAS 202-94 (not conducted)
   4) Large Missile Impact Test per FBC, TAS 201-94
   5) Cyclic Wind Pressure Loading per FBC, TAS 203-94
   6) Forced Entry Test, per FBC 2411 3.2.1, TAS 202-94

Along with marked-up drawings and installation diagram of aluminum (thermal and Non-thermal In-folding doors, prepared by Architectural Testing, Inc., Test Report No. **B4073.03-301-18**, dated 12/06/11 and Revision 1 dated 03/01/12, signed and sealed by Tyler Westerling, P. E.

Note: This report two addendum letter dated Sep, 14, 2012 and Jan 15, 2013, issued by Architectural Testing, Inc., signed and sealed by Tyler Westerling, P. E.

C. CALCULATIONS

1. Anchor verification calculations and comparative analysis, complying with FBC-2010, prepared by Building Drops Inc., dated 05-18-2012 and last revised on 10-08-2012, signed and sealed by Hermes F. Norero, P. E.
2. Glazing complies w/ ASTME-1300-02 & -04

D. QUALITY ASSURANCE

1. Miami Dade Department of Regulatory and Economic Resources (RER).

E. MATERIAL CERTIFICATIONS

1. Notice of Acceptance No. **11-0624.02** issued to E.I. DuPont DeNemours & Co., Inc. for their "**DuPont Sentry Glass ® Plus**", expiring on 01/14/17.
2. Technical cut sheet of EPDM manufactured by Extruded Silicone Product, Inc (ESP).

F. STATEMENTS

1. Statement letter of conformance and letter of no financial interest, prepared by Building Drops Inc., dated 05/12/12, signed and sealed by Hermes F. Norero, P.E.
2. Lab compliance as part of the above referenced test report.

G. OTHER

1. Test proposal # 10-1293-R & R1, approved by BNC.
2. Hoppe series HSL9000 multi-point lock mechanism brochure.

Ishaq I. Chanda, P.E.
Product Control Examiner
NOA No. 12-0523.01
Expiration Date: March 14, 2018
Approval Date: March 14, 2013

WESTERN WINDOW SYSTEMS, LLC

SERIES 9500 HURRICANE
INSWING BI-FOLD DOOR

INSTALLATION NOTES:

1. ONE (1) INSTALLATION ANCHOR IS REQUIRED AT EACH ANCHOR LOCATION SHOWN.
2. THE NUMBER OF INSTALLATION ANCHORS DEPICTED IS THE MINIMUM NUMBER OF ANCHORS TO BE USED FOR PRODUCT INSTALLATION.
3. INSTALL INDIVIDUAL INSTALLATION ANCHORS WITHIN A TOLERANCE OF ±1/16 INCH OF THE DEPICTED LOCATION IN THE ANCHOR LAYOUT DETAIL (I.E., WITHOUT CONSIDERATION OF TOLERANCES). TOLERANCES ARE NOT CUMULATIVE FROM ONE INSTALLATION ANCHOR TO THE NEXT.
4. SHIM AS REQUIRED AT EACH INSTALLATION ANCHOR WITH LOAD BEARING SHIM(S). MAXIMUM ALLOWABLE SHIM STACK TO BE 1/4 INCH. SHIM WHERE SPACE OF 1/16 INCH OR GREATER OCCURS. SHIM(S) SHALL BE CONSTRUCTED OF HIGH DENSITY PLASTIC OR BETTER.
5. FOR INSTALLATION INTO WOOD FRAMING **AT HEAD** USE 1/4" GRADE 5 LAG SCREWS OF SUFFICIENT LENGTH TO ACHIEVE 2 INCH MINIMUM EMBEDMENT INTO WOOD SUBSTRATE WITH MINIMUM 1 INCH EDGE DISTANCE.
6. FOR INSTALLATION INTO WOOD FRAMING **AT JAMBS AND SILL** USE #14 GRADE 5 WOOD SCREWS OF SUFFICIENT LENGTH TO ACHIEVE 1-1/2 INCH MINIMUM EMBEDMENT INTO WOOD SUBSTRATE WITH MINIMUM 1 INCH EDGE DISTANCE.
7. FOR INSTALLATION THROUGH PROPERLY SECURED 1X BUCK TO CONCRETE/MASONRY, OR DIRECTLY INTO CONCRETE/MASONRY, USE 1/4 INCH DIAMETER ITW TAPCONS OR ELCO ULTRACONS OF SUFFICIENT LENGTH TO ACHIEVE 1 1/4 INCH MINIMUM EMBEDMENT WITH MINIMUM 2 1/2 INCH EDGE DISTANCE.
8. FOR INSTALLATION INTO 33 KSI STEEL STUD USE 1/4-20 TEK SCREWS (GRADE 5) OF SUFFICIENT LENGTH TO ACHIEVE THREE (3) THREADS MINIMUM PENETRATION BEYOND THE STEEL STRUCTURE.
9. MINIMUM EMBEDMENT AND EDGE DISTANCE EXCLUDE WALL FINISHES, INCLUDING BUT NOT LIMITED TO STUCCO, FOAM, BRICK VENEER, AND SIDING.
10. INSTALLATION ANCHORS AND ASSOCIATED HARDWARE MUST BE MADE OF CORROSION RESISTANT MATERIAL OR HAVE A CORROSION RESISTANT COATING.
11. FOR GROUT FILLED OR HOLLOW BLOCK, DO NOT INSTALL INSTALLATION ANCHORS INTO MORTAR JOINTS. EDGE DISTANCE IS MEASURED FROM FREE EDGE OF BLOCK OR EDGE OF MORTAR JOINT INTO FACE SHELL OF BLOCK.
12. INSTALLATION ANCHORS SHALL BE INSTALLED IN ACCORDANCE WITH ANCHOR MANUFACTURER'S INSTALLATION INSTRUCTIONS, AND ANCHORS SHALL NOT BE USED IN SUBSTRATES WITH STRENGTHS LESS THAN THE MINIMUM STRENGTH SPECIFIED IN THIS APPROVAL.
13. INSTALLATION ANCHOR CAPACITIES FOR PRODUCTS HEREIN ARE BASED ON SUBSTRATE MATERIALS WITH THE FOLLOWING PROPERTIES:
    A. WOOD - MINIMUM SPECIFIC GRAVITY OF 0.55.
    B. CONCRETE -MINIMUM COMPRESSIVE STRENGTH OF 3000 PSI.
    C. GROUT-FILLED CMU- UNIT STRENGTH CONFORMS TO ASTM C-90 WITH MINIMUM COMPRESSIVE STRENGTH OF 1924 PSI AND GROUT CONFORMS TO ASTM C 476, MINIMUM GROUT COMPRESSIVE STRENGTH OF 2000 PSI.
    D. HOLLOW BLOCK CMU - UNIT STRENGTH CONFORMS TO ASTM C-90 WITH MINIMUM COMPRESSIVE STRENGTH OF 1924 PSI.
    E. STEEL - MINIMUM YIELD STRENGTH OF 33 KSI. MINIMUM WALL THICKNESS OF 59.8 MIL (0.0598" or 16 GAUGE). MIN. 1/2" EDGE DISTANCE.

GENERAL NOTES:

1. THE PRODUCT SHOWN HEREIN IS DESIGNED AND MANUFACTURED TO COMPLY WITH THE 2010 FLORIDA BUILDING CODE (FBC), INCLUDING HVHZ AND HAS BEEN EVALUATED ACCORDING TO THE FOLLOWING:
    - TAS 201-94
    - TAS 202-94
    - TAS 203-94
2. ADEQUACY OF THE EXISTING STRUCTURAL CONCRETE/MASONRY, 2X FRAMING & STEEL FRAMING AS A MAIN WIND FORCE RESISTING SYSTEM CAPABLE OF WITHSTANDING AND TRANSFERRING APPLIED PRODUCT LOADS TO THE FOUNDATION IS THE RESPONSIBILITY OF THE ENGINEER OR ARCHITECT OF RECORD FOR THE PROJECT OF INSTALLATION.
3. 1X AND 2X BUCKS (WHEN USED) SHALL BE DESIGNED AND ANCHORED TO PROPERLY TRANSFER ALL LOADS TO THE STRUCTURE. BUCK DESIGN AND INSTALLATION IS THE RESPONSIBILITY OF THE ENGINEER OR ARCHITECT OF RECORD FOR THE PROJECT OF INSTALLATION.
4. THE INSTALLATION DETAILS DESCRIBED HEREIN ARE GENERIC AND MAY NOT REFLECT ACTUAL CONDITIONS FOR A SPECIFIC SITE. IF SITE CONDITIONS CAUSE INSTALLATION TO DEVIATE FROM THE REQUIREMENTS DETAILED HEREIN, A LICENSED ENGINEER OR ARCHITECT SHALL PREPARE SITE SPECIFIC DOCUMENTS FOR USE WITH THIS DOCUMENT. FOR NON-HVHZ AREA, INSTALLATION TO BE REVIEWED BY AHJ (AUTHORITY HAVING JURISDICTION).
5. DEVIATION FROM THE APPROVED NOA IN HVHZ AREA REQUIRES A ONE TIME APPROVAL FROM MIAMI-DADE COUNTY.
6. APPROVED IMPACT PROTECTIVE SYSTEM **IS NOT REQUIRED** ON THIS PRODUCT IN AREAS REQUIRING IMPACT RESISTANCE.
7. DOOR FRAME MATERIAL: ALUMINUM 6063-T5
8. GLASS MEETS THE REQUIREMENTS OF ASTM E 1300-04 GLASS CHARTS. SEE SHEET 7 FOR GLAZING DETAILS.
9. IN ACCORDANCE WITH THE 2010 FBC SEC. 2003.8.4 DISSIMILAR METALS INCLUDING FASTENERS THAT MAY COME INTO CONTACT WITH ALUMINUM UNIT FRAMING SHALL BE PROTECTED AS DEFINED IN SEC 2003.8.4.2.
10. FOR INSTALLATION OF U-CHANNEL THRESHOLD 2X8 WOOD BUCK OR CONCRETE MUST BE RECESSED AND/OR ROUTED TO ACCOMMODATE THESE COMPONENTS PRIOR TO INSTALLATION. SEE SHEET 14 FOR TYPICAL DETAILS.

TABLE OF CONTENTS

SHEET	REVISION	SHEET DESCRIPTION
1	-	INSTALLATION & GENERAL NOTES
2	-	ELEVATION & ANCHOR LAYOUT (1)
3	-	ELEVATION & ANCHOR LAYOUT (2)
4	-	ELEVATION & ANCHOR LAYOUT (3)
5	-	VERTICAL SECTIONS (THERMALLY/NON-THERMALLY BROKEN)
6	-	HORIZONTAL SECTIONS (THERMALLY BROKEN)
7	-	HORIZONTAL SECTIONS (NON-THERMALLY BROKEN)
8	-	HORIZONTAL SECTIONS & GLAZING DETAILS
9	-	ASSEMBLY DETAILS & DESIGN PRESSURE TABLE
10	-	APPROVED CONFIGURATIONS & HARDWARE REQUIREMENTS
11	-	COMPONENTS & BILL OF MATERIALS
12	-	COMPONENTS
13	-	COMPONENTS
14	-	INSTALLATION PREPARATION DETAILS

DESIGN PRESSURE RATING		
GLAZE TYPE	THERMALLY BROKEN OR NON-THERMALLY BROKEN FRAMES	MISSILE IMPACT RATING
1 & 2	*NOT APPROVED WHERE WATER INFILTRATION IS REQUIRED. SEE DP TABLES ON SHEET 9.	LARGE AND SMALL MISSILE IMPACT RATED

*UNIT SHALL BE INSTALLED AT LOCATION PROTECTED BY OVERHANG SUCH THE OVERHANG RATIO (OH) = OH LENGTH/OH HEIGHT GREATER THAN 1.0 WHERE WATER INFILTRATION IS REQUIRED.

western windowsystems
5621 SOUTH 25TH STREET
PHOENIX, AZ 85040
PH: (602) 268-1300 FX: (602) 243-3119

TITLE: SERIES 9500 HURRICANE INSWING BI-FOLD DOOR INSTALLATION & GENERAL NOTES

PREPARED BY:
BUILDING DROPS, INC.
398 E. DANIA BEACH BLVD. #338
DANIA BEACH, FL 33004
PH: 954.399.8478 FX: 954.744.4738

REVISIONS

NO.	DESCRIPTION	BY	DATE

HERMES F. NORERO, P.E.
FLORIDA, P. E. NO. 73778
398 EAST DANIA BEACH BLVD, #338
DANIA BEACH, FL 33004
FBPE, CERT. OF AUTHORIZATION NO. 29578

Approved as complying with the Florida Building Code
Date MAR 14, 2013
NOA# 12-0522.01
Miami Dade Product Control
By

DATE: 03.14.12
DWN BY: JLA
CHK BY: HFN
SCALE: NTS

DWG #: WWS001

SHEET: 1 OF 14

3/6/2013 7:22 PM

p:\western windows\md-p-11-0510 series 9500 bi-fold door submittal\dwgs\wws001.dwg

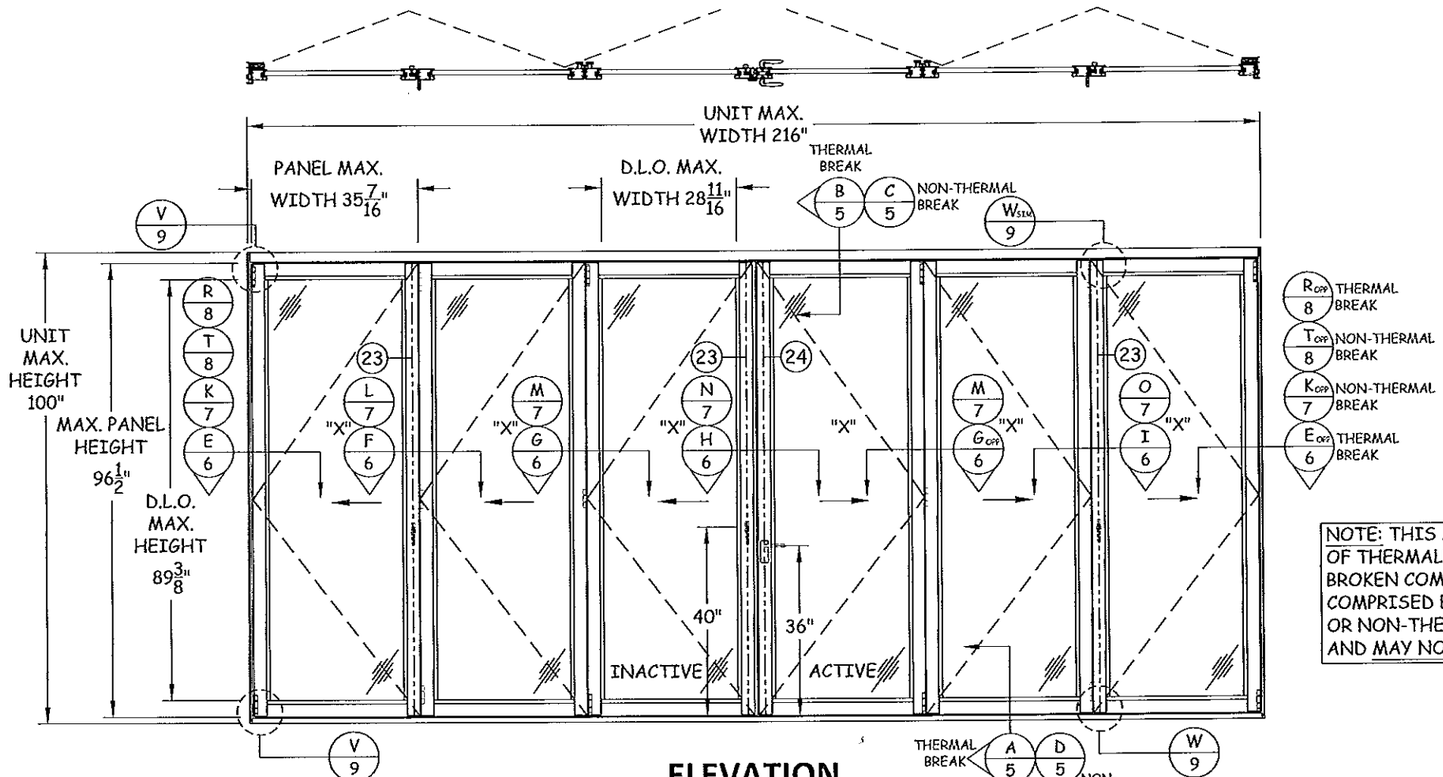

NOTE: THIS APPROVAL ALLOWS FOR THE USE OF THERMALLY BROKEN OR NON-THERMALLY BROKEN COMPONENTS. SYSTEMS MUST BE COMPRISED ENTIRELY OF THERMALLY BROKEN OR NON-THERMALLY BROKEN COMPONENTS AND MAY NOT BE INTERMIXED.

ELEVATION

INSWING 3L3R UNIT SHOWN

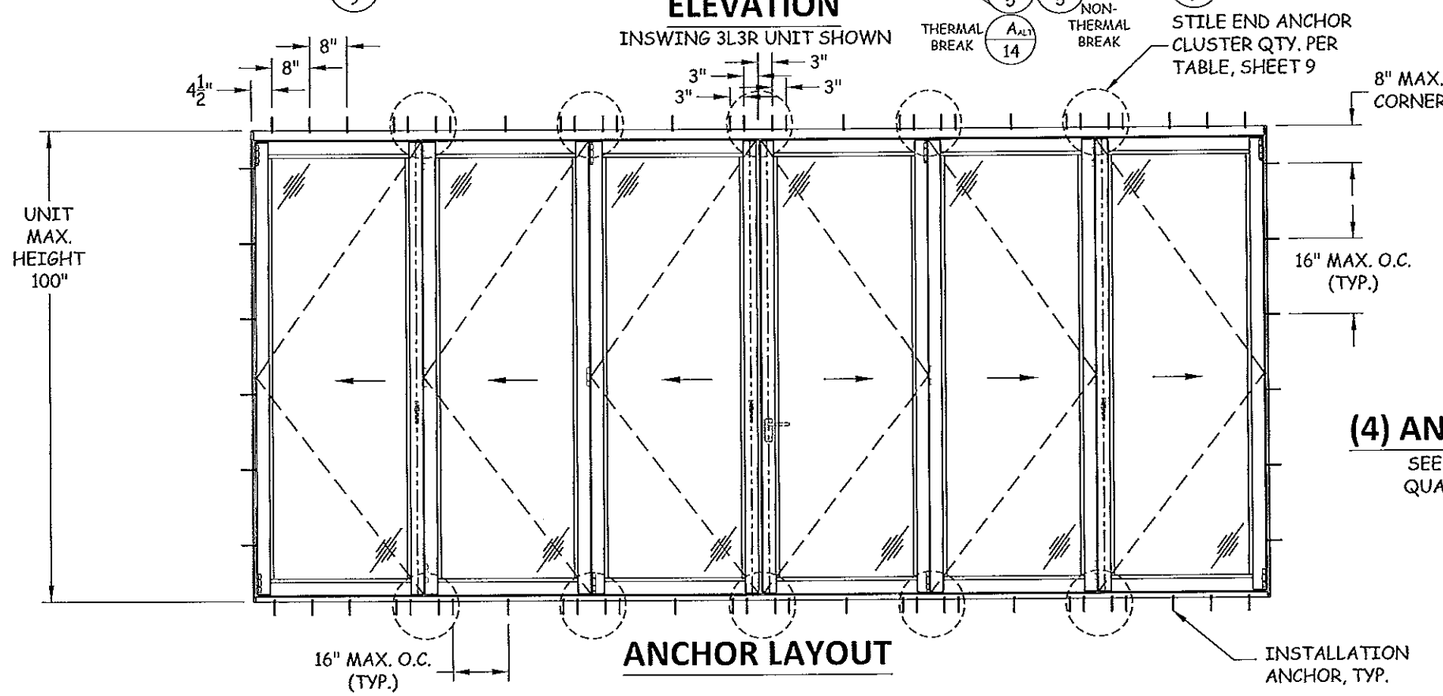

ANCHOR LAYOUT

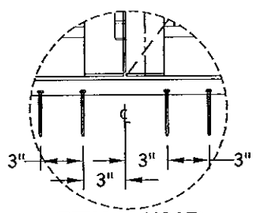

STILE END
(4) ANCHOR CLUSTER SHOWN

SEE SHEET 9 FOR 5-ANCHOR CLUSTER QUANTITY DETAILS & REQUIREMENTS

Approved as complying with the Florida Building Code
Date 3/14/2013
NOA# 12-0523.01
Miami Dade Product Control
By

western windowsystems
5621 SOUTH 25TH STREET
PHOENIX, AZ 85040
PH: (602) 268-1300 FX: (602) 243-3119

TITLE: SERIES 9500 HURRICANE INSWING BI-FOLD DOOR ELEVATION & ANCHOR LAYOUT (1)

PREPARED BY:
BUILDING DROPS, INC.
398 E. DANIA BEACH BLVD. #338
DANIA BEACH, FL 33004
PH: 954.399.8478 FX: 954.744.4738

NO.	DESCRIPTION	BY	DATE

REVISIONS

HERMES F. NORERO, P.E.
FLORIDA P.E. LIC. NO. 75779
3128 EAST DANIA BEACH BLVD. #338
DANIA BEACH, FLORIDA 33004
FLPE CERT. OF AUTHORIZATION NO. 28579

DATE: 03.14.12 | DWN BY: JLA | CHK BY: HFN | SCALE: NTS

DWG #: WWS001

SHEET: 2 OF 14

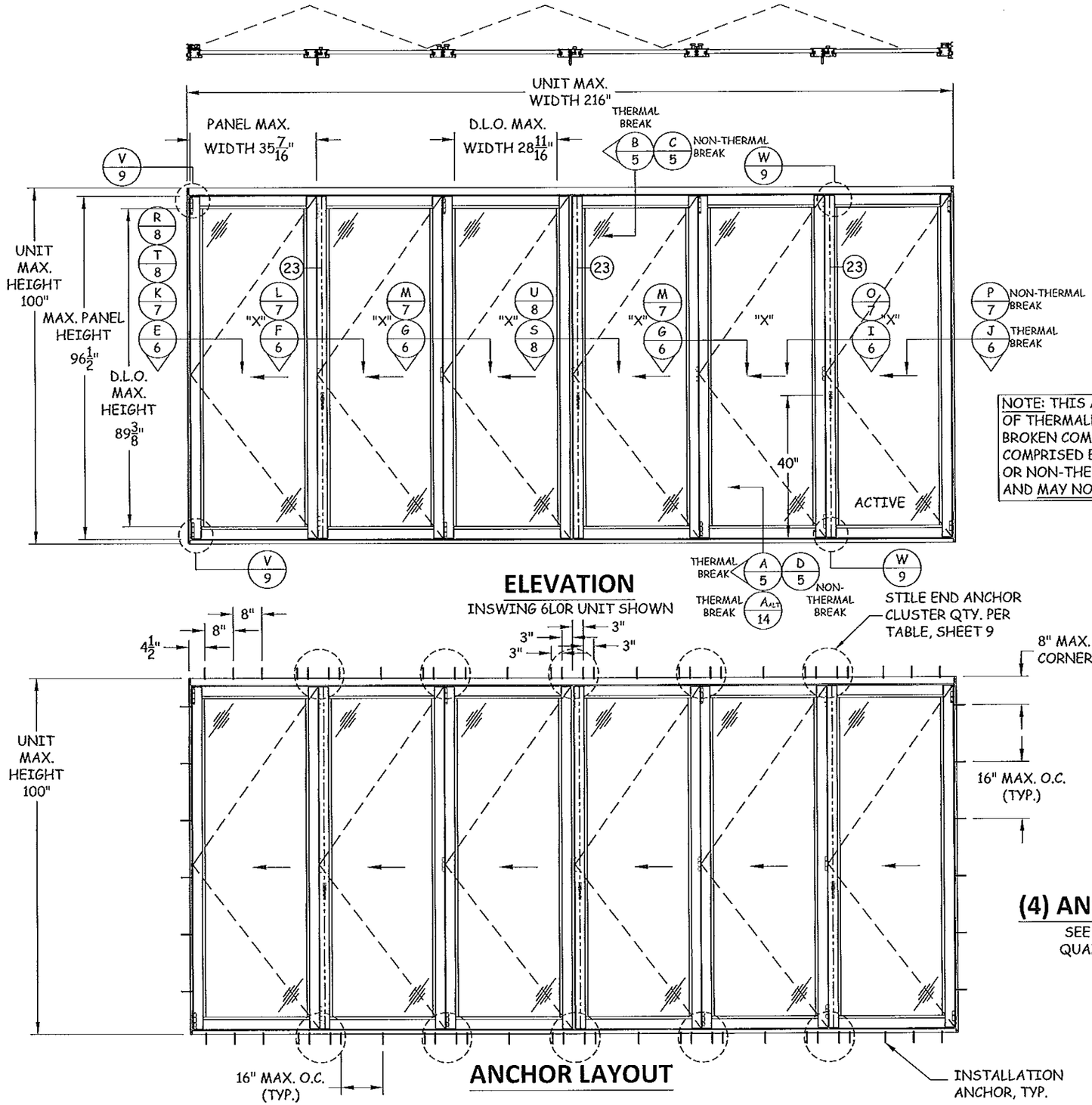

ELEVATION

INSWING 6LOR UNIT SHOWN

ANCHOR LAYOUT

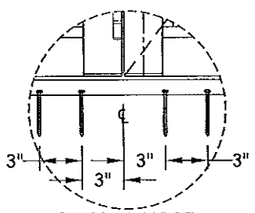

STILE END
(4) ANCHOR CLUSTER SHOWN

SEE SHEET 9 FOR 5-ANCHOR CLUSTER QUANTITY DETAILS & REQUIREMENTS

Approved as complying with the Florida Building Code
Date: 3/14/2013
NOA# 12-0523.01
Miami Dade Product Control
By

western windowsystems
5621 SOUTH 25TH STREET
PHOENIX, AZ 85040
PH: (602) 268-1300 FX: (602) 243-3119

TITLE: SERIES 9500 HURRICANE INSWING BI-FOLD DOOR ELEVATION & ANCHOR LAYOUT (2)

PREPARED BY:
BUILDING DROPS, INC.
398 E. DANIA BEACH BLVD. #338
DANIA BEACH, FL 33004
PH: 954.399.8478 FX: 954.744.4738

REVISIONS

NO.	DESCRIPTION	BY	DATE

HERMES F. MORENO, P.E.
FLORIDA P.E. NO. 74778
398 E. DANIA BEACH BLVD. #338
DANIA BEACH, FL 33004
FB-PE CERT. OF AUTHORIZATION NO. 28578

DATE: 03.14.12
DWN BY: JLA
CHK BY: HFN
SCALE: NTS

DWG #: WWS001

SHEET: 3 OF 14

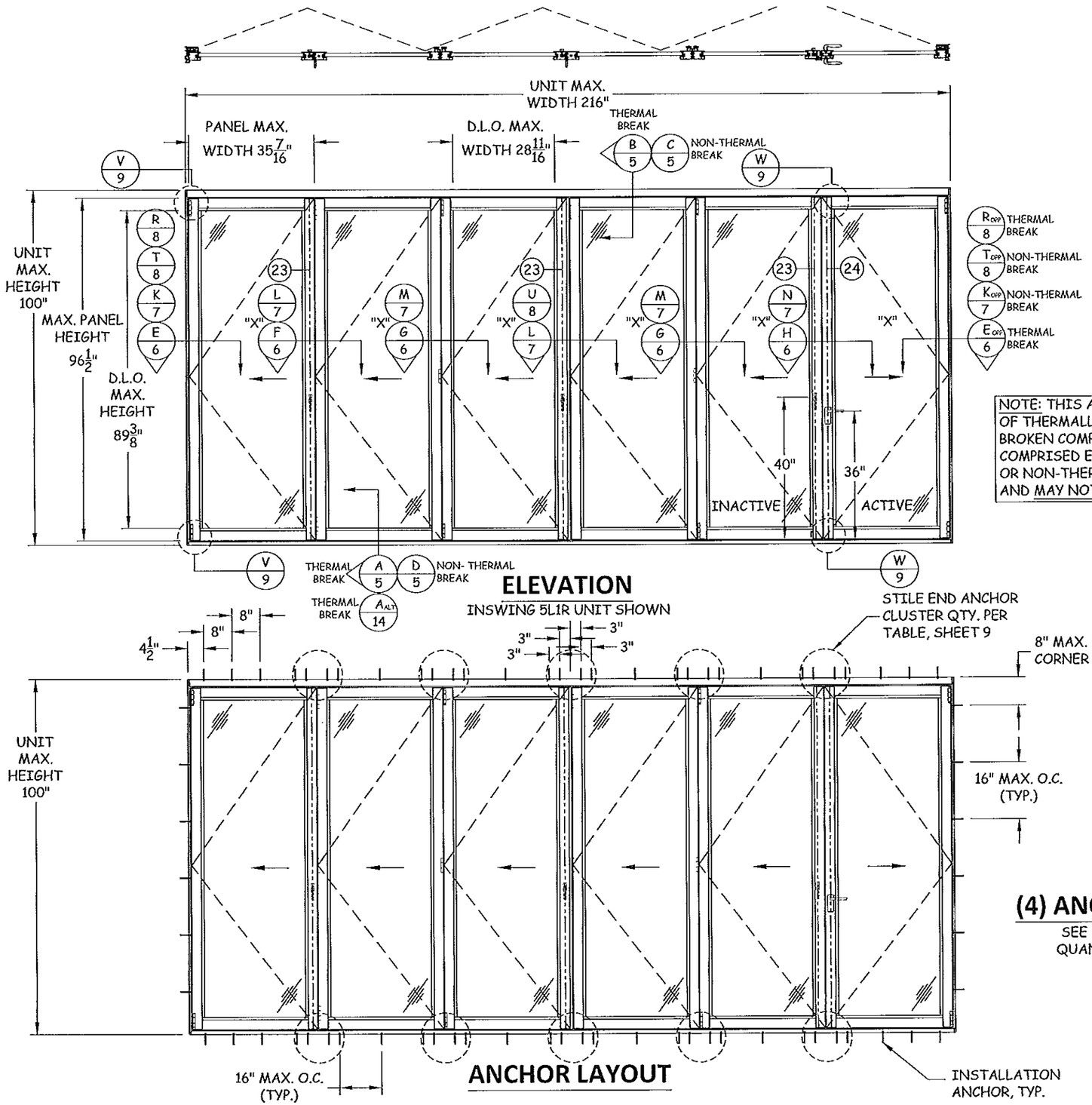

NOTE: THIS APPROVAL ALLOWS FOR THE USE OF THERMALLY BROKEN OR NON-THERMALLY BROKEN COMPONENTS. SYSTEMS MUST BE COMPRISED ENTIRELY OF THERMALLY BROKEN OR NON-THERMALLY BROKEN COMPONENTS AND MAY NOT BE INTERMIXED.

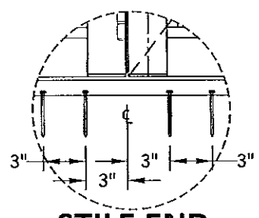

STILE END
(4) ANCHOR CLUSTER SHOWN

SEE SHEET 9 FOR 5-ANCHOR CLUSTER QUANTITY DETAILS & REQUIREMENTS

Approved as complying with the Florida Building Code
Date 3/14/2013
NOA# 12-0523.01
Miami Dade Product Control
By

western windowsystems
5621 SOUTH 25TH STREET
PHOENIX, AZ 85040
PH: (602) 268-1300 FX: (602) 243-3119

TITLE: SERIES 9500 HURRICANE INSWING BI-FOLD DOOR ELEVATION & ANCHOR LAYOUT (3)

PREPARED BY:
BUILDING DROPS, INC.
398 E. DANIA BEACH BLVD. #338
DANIA BEACH, FL 33004
PH: 954.399.8478 FX: 954.744.4738

REVISIONS	NO.	DESCRIPTION	BY	DATE

HERMES F. NORIEGA, P.E.
FLORIDA P.E. NO. 73777
398 E. DANIA BEACH BLVD. #338
DANIA BEACH, FL 33004
CERTIFICATE OF AUTHORIZATION NO. 28370

DATE: 03.14.12
DWN BY: JLA
CHK BY: HFN
SCALE: NTS

DWG #: WWS001

SHEET: 4 OF 14

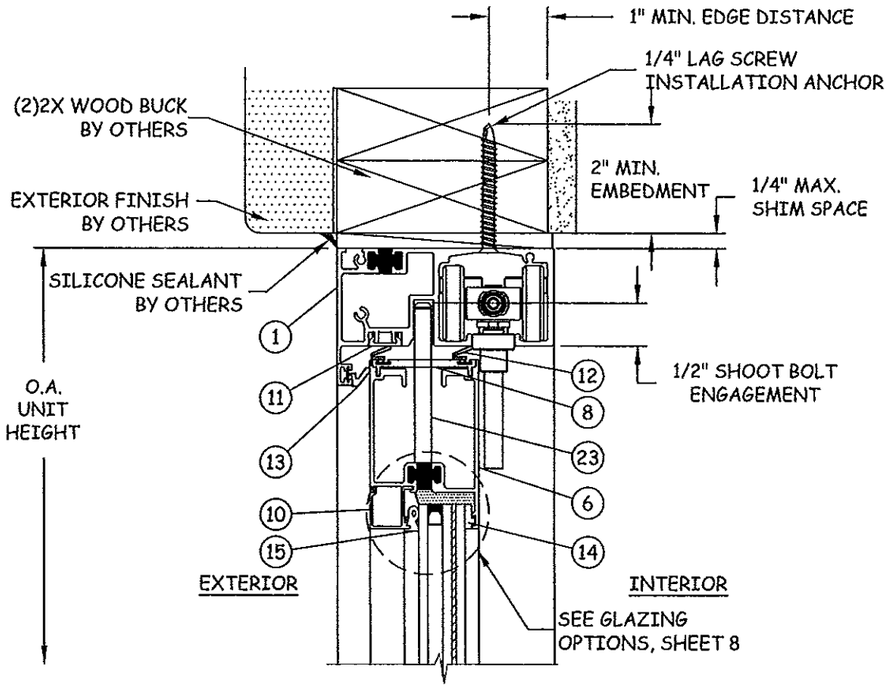

B/5 VERTICAL SECTION

HEAD - 2X WOOD BUCK
THERMALLY BROKEN

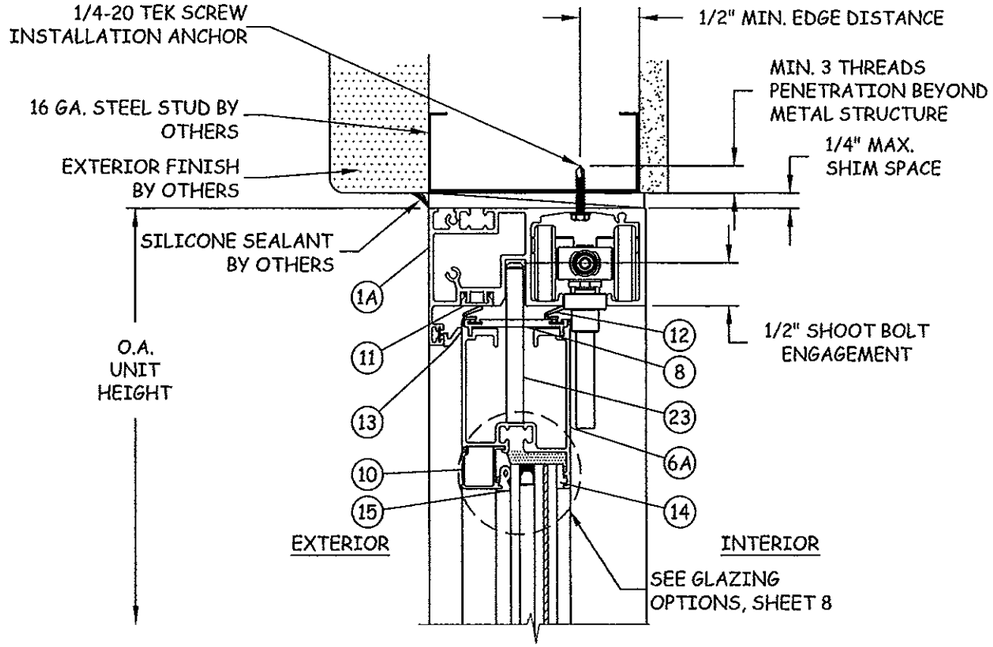

C/5 VERTICAL SECTION

HEAD - STEEL STUD
NON-THERMALLY BROKEN

MAX UNIT HEIGHT 100"

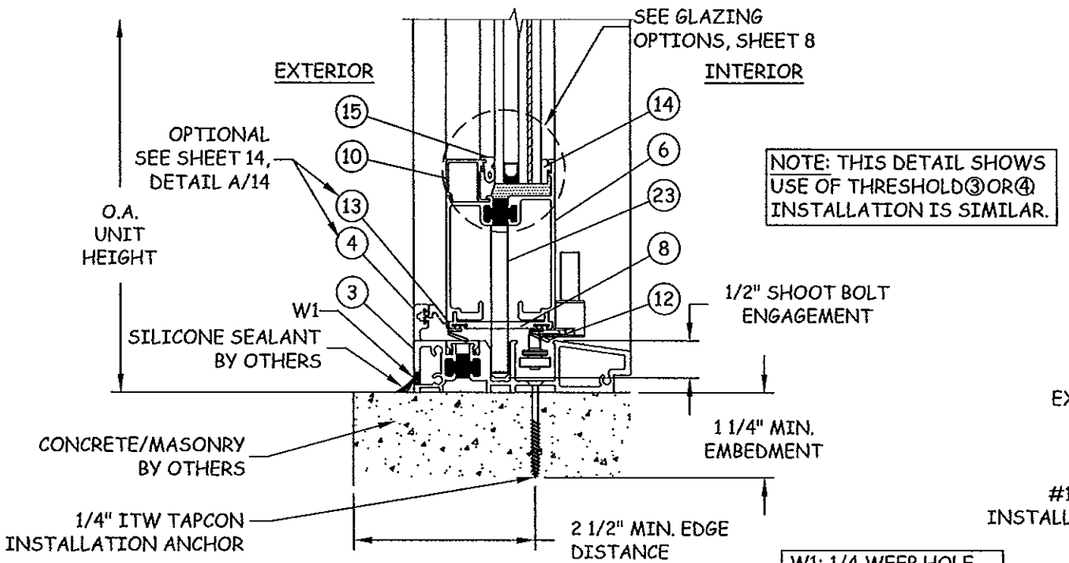

NOTE: THIS DETAIL SHOWS USE OF THRESHOLD③OR④ INSTALLATION IS SIMILAR.

W1: 1/4 WEEP HOLE AT 18" O.C. IN WATER BARRIER AND FLUSH THRESHOLD

A/5 VERTICAL SECTION

SILL - CONCRETE/MASONRY
THRESHOLD-THERMALLY BROKEN

MAX UNIT HEIGHT 100"

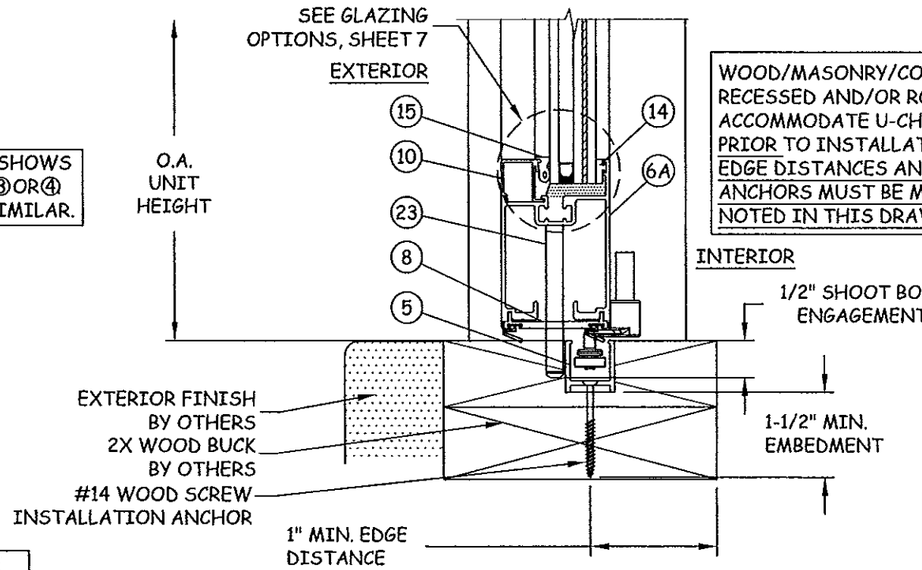

WOOD/MASONRY/CONCRETE SHALL BE RECESSED AND/OR ROUTED TO ACCOMMODATE U-CHANNEL THRESHOLD PRIOR TO INSTALLATION. ALL APPLICABLE EDGE DISTANCES AND EMBEDMENTS FOR ANCHORS MUST BE MAINTAINED AS NOTED IN THIS DRAWING.

D/5 VERTICAL SECTION

SILL - 2X WOOD FRAME
U-CHANNEL THRESHOLD

Approved as complying with the Florida Building Code
Date 3/19/2013
NOA# 12-0523.10
Miami Dade Product Control
By

western windowsystems
5621 SOUTH 25TH STREET
PHOENIX, AZ 85040
PH: (602) 268-1300 FX: (602) 243-3119

TITLE: SERIES 9500 HURRICANE INSWING BI-FOLD DOOR VERTICAL SECTIONS (THERMALLY/ NON-THERMALLY BROKEN)

PREPARED BY:
BUILDING DROPS, INC.
398 E. DANIA BEACH BLVD. #338
DANIA BEACH, FL 33004
PH: 954.399.8478 FX: 954.744.4738

REVISIONS

NO.	DESCRIPTION	BY	DATE

HERMES F. NORERO, P.E.
FLORIDA P. E. NO. 72778
398 EAST DANIA BEACH BLVD. #338
DANIA BEACH, FL 33004
FBPE CERT. OF AUTHORIZATION NO. 29578

DATE: 03.14.12
DWN BY: JLA
CHK BY: HFN
SCALE: NTS

DWG #: WWS001

SHEET: 5 OF 14

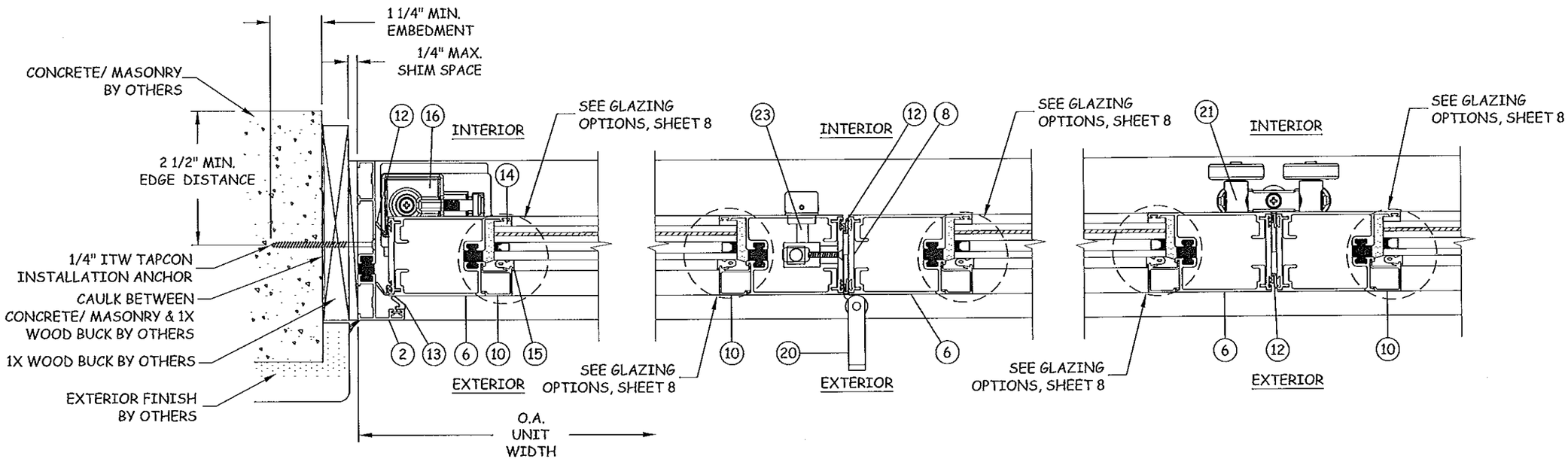

E/6 HORIZONTAL SECTION

JAMB - CONCRETE/MASONRY
PIVOT HINGE- THERMALLY BROKEN

F/6 HORIZONTAL SECTION

RIGHT OFFSET HINGE W/ HANDLE
THERMALLY BROKEN

G/6 HORIZONTAL SECTION

INTERMEDIATE CARRIER SET
THERMALLY BROKEN

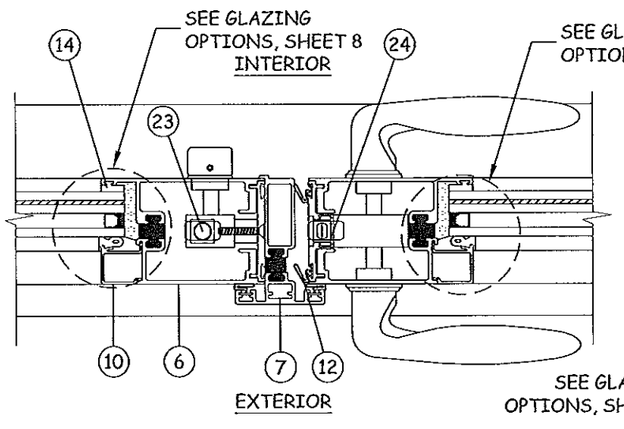

H/6 HORIZONTAL SECTION

ASTRAGAL - THERMALLY BROKEN

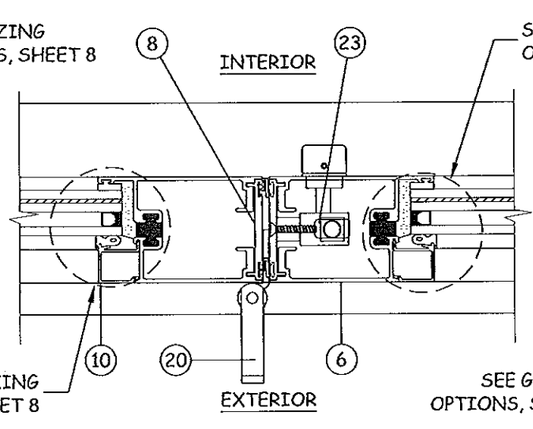

I/6 HORIZONTAL SECTION

LEFT OFFSET HINGE W/ HANDLE
THERMALLY BROKEN

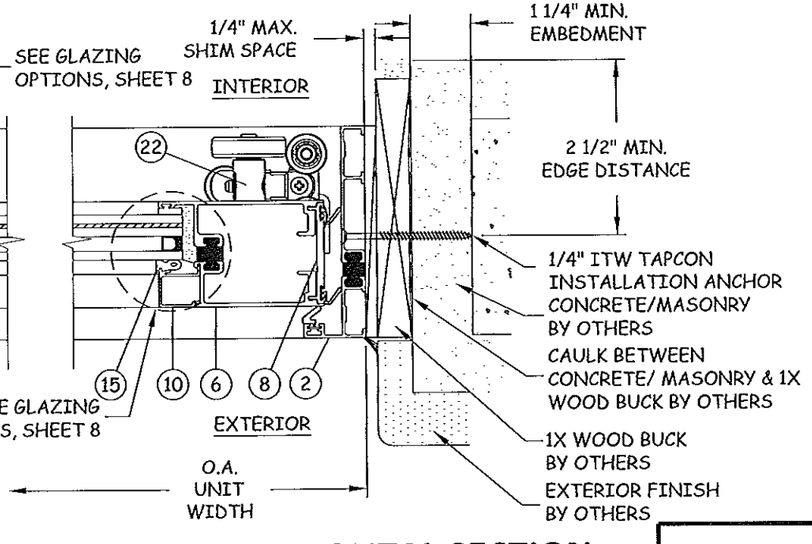

J/6 HORIZONTAL SECTION

JAMB - CONCRETE/MASONRY
END CARRIER SET-THERMALLY BROKEN

Approved as complying with the Florida Buiding Code
Date 3/14/13
NOA# 12-0523.01
Miami Dade Product Control
By Lyung L. Chan

western windowsystems
5621 SOUTH 25TH STREET
PHOENIX, AZ 85040
PH: (602) 268-1300 FX: (602) 243-3119

TITLE: SERIES 9500 HURRICANE INSWING BI-FOLD DOOR HORIZONTAL SECTIONS (THERMALLY BROKEN)

PREPARED BY:
BUILDING DROPS, INC.
398 E. DANIA BEACH BLVD. #338
DANIA BEACH, FL 33004
PH: 954.399.8478 FX: 954.744.4738

REVISIONS

NO.	DESCRIPTION	BY	DATE

3-7-2013
HERMES F. NORIEGA, P.E.
FLORIDA P.E. NO. 75776
398 EAST DANIA BEACH BLVD. #338
DANIA BEACH, FL 33004
CA# 29631 EXPIRATION DATE: 2/28/2015
CERT. OF AUTHORIZATION NO. 28578

DATE: 03.14.12
DWN BY: JLA
CHK BY: HFN
SCALE: NTS

DWG #: WWS001
SHEET: 6 OF 14

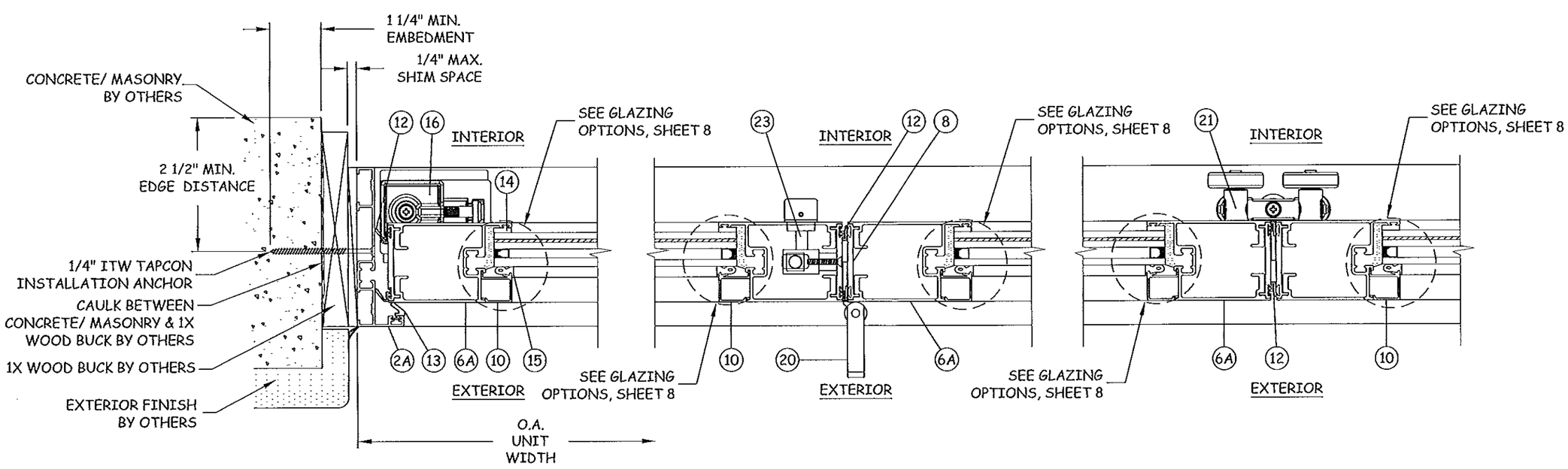

K/7 HORIZONTAL SECTION

JAMB - CONCRETE/MASONRY
PIVOT HINGE- NON-THERMALLY BROKEN

L/7 HORIZONTAL SECTION

RIGHT OFFSET HINGE W/ HANDLE
NON-THERMALLY BROKEN

M/7 HORIZONTAL SECTION

INTERMEDIATE CARRIER SET
NON-THERMALLY BROKEN

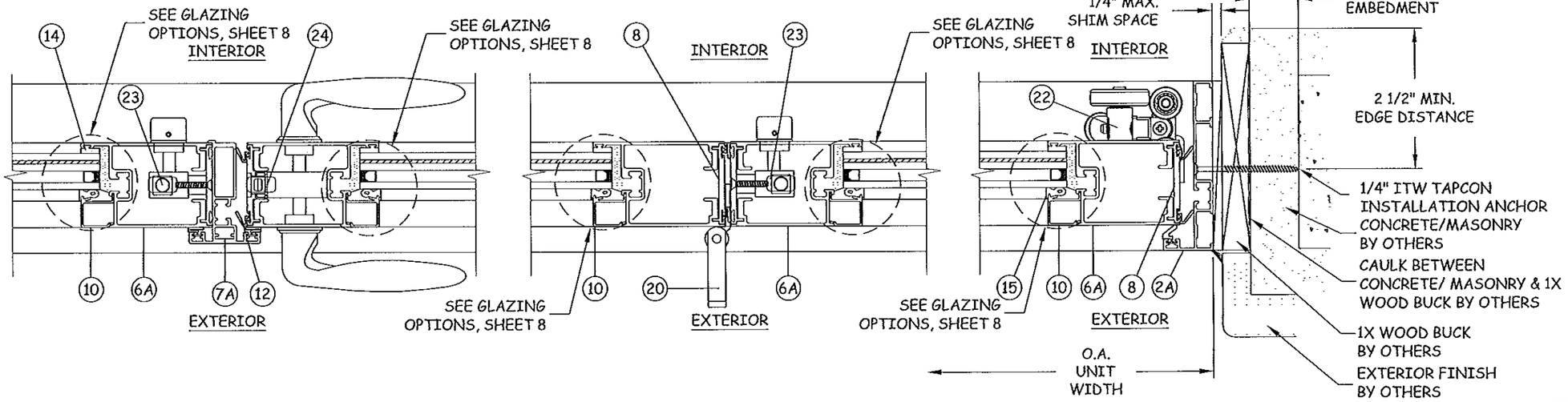

N/7 HORIZONTAL SECTION

ASTRAGAL - NON-THERMALLY BROKEN

O/7 HORIZONTAL SECTION

LEFT OFFSET HINGE W/ HANDLE
NON-THERMALLY BROKEN

P/7 HORIZONTAL SECTION

JAMB - CONCRETE/MASONRY
END CARRIER SET-NON-THERMALLY BROKEN

western windowsystems
5621 SOUTH 25TH STREET
PHOENIX, AZ 85040
PH: (602) 268-1300 FX: (602) 243-3119

TITLE: SERIES 9500 HURRICANE INSWING BI-FOLD DOOR HORIZONTAL SECTIONS (NON-THERMALLY BROKEN)

PREPARED BY:
BUILDING DROPS, INC.
398 E. DANIA BEACH BLVD. #338
DANIA BEACH, FL 33004
PH: 954.399.8478 FX: 954.744.4738

NO.	DESCRIPTION	BY	DATE
	REVISIONS		

HERMES F. NORIEGA, PE
FLORIDA P.E. NO. 75779
398 EAST DANIA BEACH BLVD. #503
DANIA BEACH, FL 33004
FBPE CERT. OF AUTHORIZATION NO. 28579

Approved as complying with the Florida Building Code
Date 3/14/13
NOA# 12-0523.01
Miami Dade Product Control
By

DATE: 03.14.12
DWN BY: JLA
CHK BY: HFN
SCALE: NTS

DWG #: WWS001

SHEET: 7 OF 14

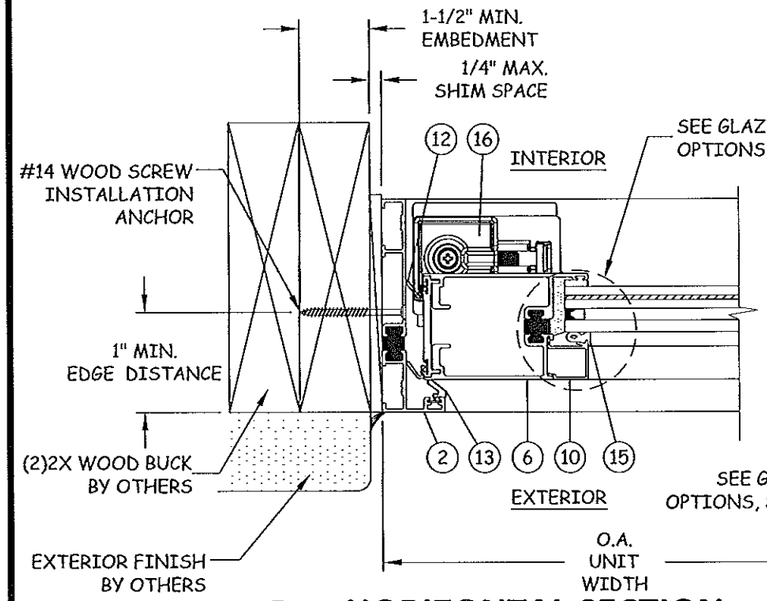

R/8 HORIZONTAL SECTION

JAMB - 2X WOOD FRAME
PIVOT HINGE - THERMALLY BROKEN

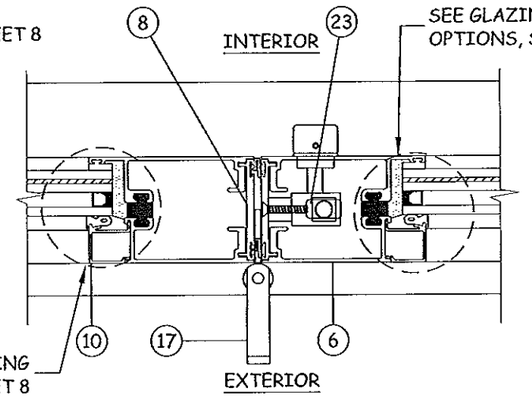

S/8 HORIZONTAL SECTION

CENTER HINGE W/ HANDLE
THERMALLY BROKEN

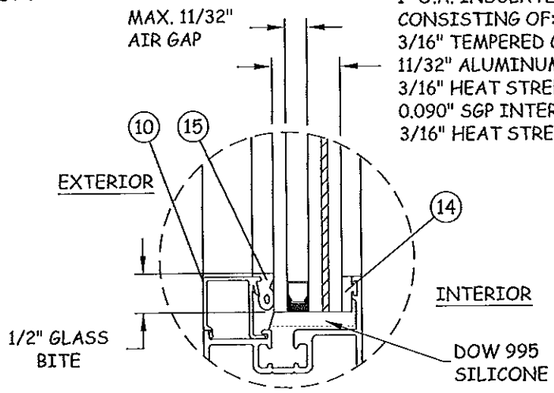

GLAZING DETAIL 1

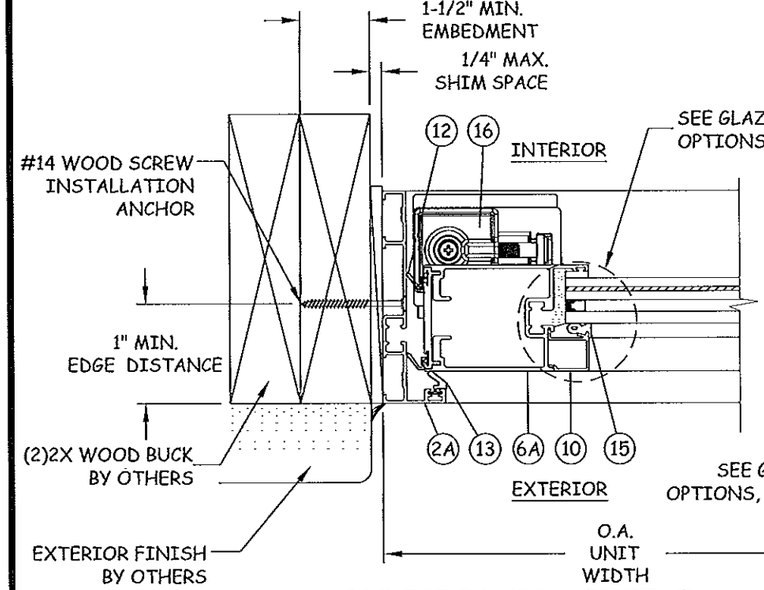

T/8 HORIZONTAL SECTION

JAMB - 2X WOOD FRAME
PIVOT HINGE - NON-THERMALLY BROKEN

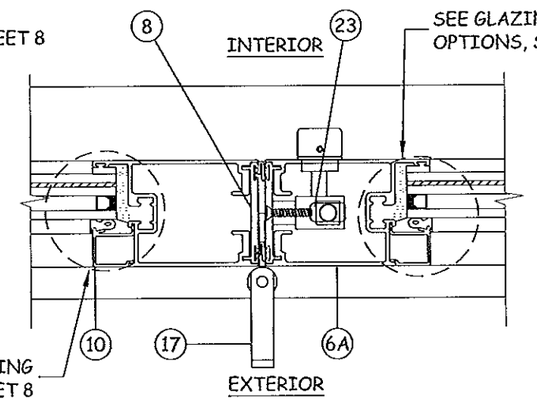

U/8 HORIZONTAL SECTION

CENTER HINGE W/ HANDLE
NON-THERMALLY BROKEN

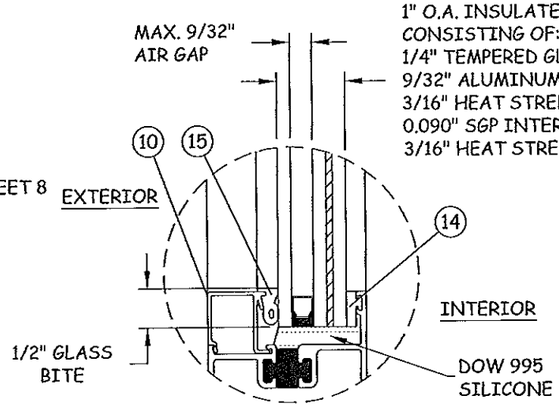

GLAZING DETAIL 2

GLAZING NOTES:

1. ALL GLAZING CONFIGURATIONS SHALL COMPLY WITH SAFETY GLAZING REQUIREMENTS OUTLINED IN 2010 FBC SECTION 2406 WITH EVIDENCE TO BE SUPPLIED TO BUILDING OFFICIAL.
2. THERMALLY BROKEN AND NON-THERMALLY BROKEN CONDITIONS SHOWN IN DETAILS. GLAZING IS SIMILAR IN EITHER PANEL TYPE.

Approved as complying with the Florida Building Code
Date 3/19/2013
NOA# 12-0523.01
Miami Dade Product Control
By Ishaq I. Chanda

western windowsystems
5621 SOUTH 25TH STREET
PHOENIX, AZ 85040
PH: (602) 268-1300 FX: (602) 243-3119

TITLE: SERIES 9500 HURRICANE INSWING BI-FOLD DOOR HORIZONTAL SECTIONS & GLAZING DETAILS

PREPARED BY:
BUILDING DROPS, INC.
398 E. DANIA BEACH BLVD. #338
DANIA BEACH, FL 33004
PH: 954.399.8478 FX: 954.744.4738

REVISIONS			
NO.	DESCRIPTION	BY	DATE

3-7-2013
HERMES F. NORERO, P.E.
FLORIDA P.E. NO. 73778
398 EAST DANIA BEACH BLVD. #338
DANIA BEACH, FL 33004
FBPE CERT. OF AUTHORIZATION NO. 28578

DATE:	DWN BY:	CHK BY:	SCALE:
03.14.12	JLA	HFN	NTS

DWG #: WWS001

SHEET: 8 OF14

THERMALLY BROKEN OR NON-THERMALLY BROKEN BI-FOLD UNITS DESIGN LOAD CAPACITY (PSF)					
UNIT HEIGHT	PANEL WIDTH (NOMINAL)	JAMB ANCHOR QTY.	STILE END ANCHOR QTY.	ANY THRESHOLD	
				POS. (+)	NEG. (-)
6'-8"	2'-6"	5	4	50.0	50.0
	2'-9"	5	4	49.5	49.5
	3'-0"	5	4	41.6	41.6
7'-0"	2'-6"	6	4	50.0	50.0
	2'-9"	6	4	48.4	48.4
	3'-0"	6	4	41.6	41.6
8'-0"	2'-6"	6	5	48.6	48.6
	2'-9"	6	5	45.0	45.0
	3'-0"	6	5	41.6	41.6
8'-4"	2'-6"	6	5	46.3	46.3
	2'-9"	6	5	42.9	42.9
	3'-0"	6	5	40.0	40.0

NOTES:

1. ALL LOADS SHOWN IN CHARTS ABOVE ARE FOR DOORS USING THE NOTED THRESHOLD(S) QUALIFIED FOR USE IN THIS APPROVAL.
2. UNITS ARE NOT RATED FOR WATER INFILTRATION REQUIREMENTS.*
3. SEE SHEET 7 FOR QUALIFIED GLAZING OPTIONS.
4. SEE INSTALLATION NOTES 5-8 ON SHEET 1 FOR ANCHOR DETAILS.
5. PANEL HEIGHT = UNIT HEIGHT - 4".
6. DLO WIDTH = PANEL WIDTH - 8.75".
7. DLO HEIGHT = UNIT HEIGHT - 7.125".

*WHERE WATER INFILTRATION REQUIREMENTS EXIST UNIT SHALL BE INSTALLED AT LOCATION PROTECTED BY OVERHANG SUCH THAT THE OVERHANG RATIO (OH) = OH LENGTH/OH HEIGHT GREATER THAN 1.0.

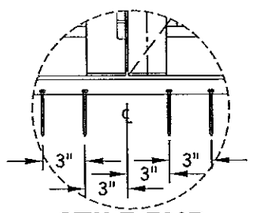

STILE END ANCHOR CLUSTER

(4) ANCHOR CLUSTER

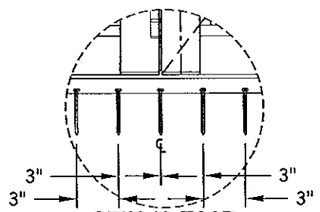

STILE END ANCHOR CLUSTER

(5) ANCHOR CLUSTER

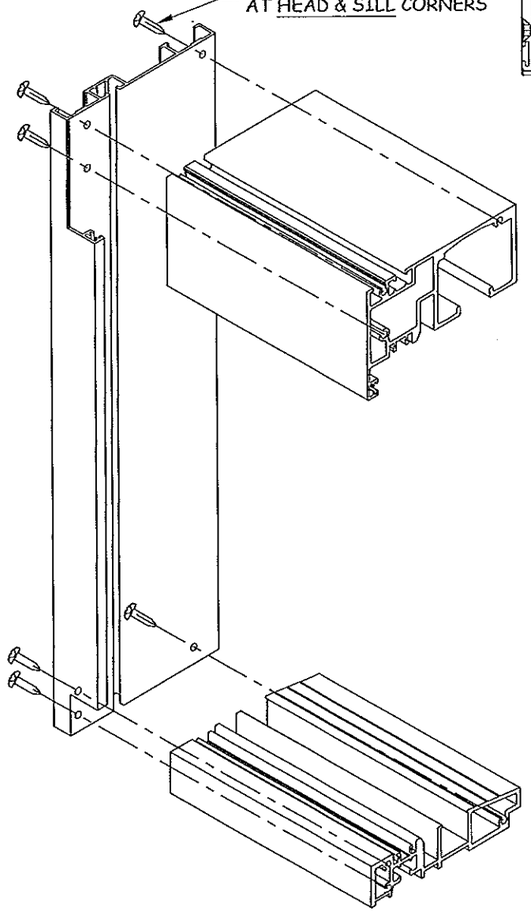

V/9 **FRAME ASSEMBLY**

FRAME WITH FLUSH THRESHOLD SHOWN

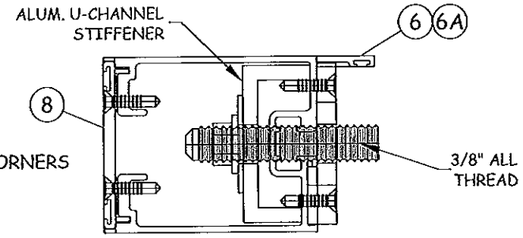

PANEL CONNECTION DETAIL

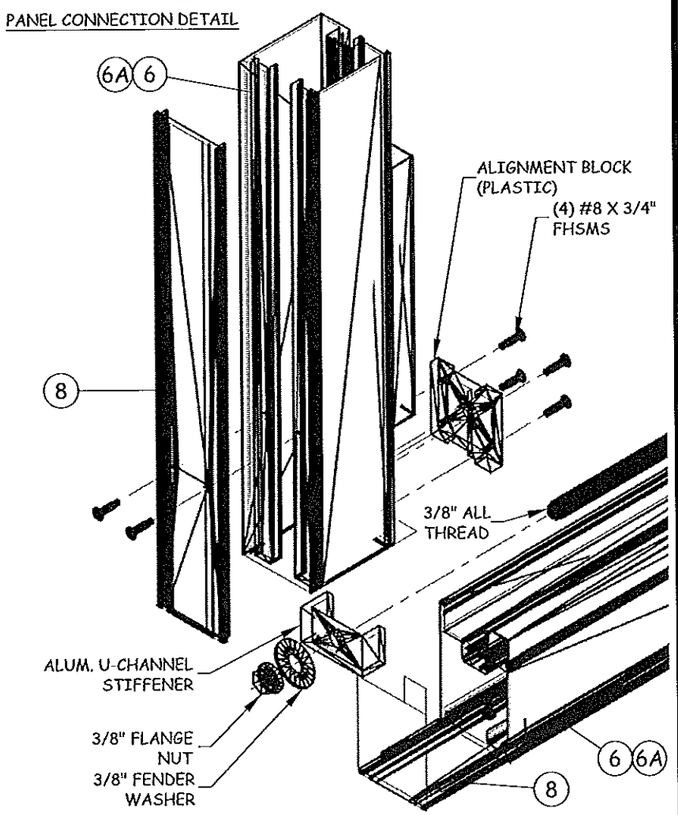

W/9 **PANEL ASSEMBLY**

TYPICAL PANEL

JOINERY NOTES:

1. ALL PANEL CORNER SEAMS SEALED W/ SILICONE
2. U-CHANNEL THRESHOLD IS RECESSED INTO FLOOR AND IS NOT FASTENED TO FRAME AT JAMBS

Approved as complying with the Florida Building Code
Date 3/14/13
NOA# 12-0523.01
Miami Dade Product Control
By Ishag L. Chaud

western windowsystems
5621 SOUTH 25TH STREET
PHOENIX, AZ 85040
PH: (602) 268-1300 FX: (602) 243-3119

TITLE: SERIES 9500 HURRICANE INSWING BI-FOLD DOOR ASSEMBLY DETAILS & DESIGN PRESSURE TABLE

PREPARED BY:
BUILDING DROPS, INC.
398 E. DANIA BEACH BLVD. #338
DANIA BEACH, FL 33004
PH: 954.399.8478 FX: 954.744.4738

REVISIONS

NO.	DESCRIPTION	BY	DATE

HERMES F. MORENO, P.E.
FLORIDA P.E. NO. 73778
398 EAST DANIA BEACH BLVD. #338
DANIA BEACH, FL 33004
PEPE CERT. OF AUTHORIZATION NO. 25378

3-7-2013

DATE: 03.14.12 | DWN BY: JLA | CHK BY: HFN | SCALE: NTS

DWG #: WWS001

SHEET: 9 OF 14

ODD/ODD PANEL COUNT TYP. HARDWARE REQUIREMENTS

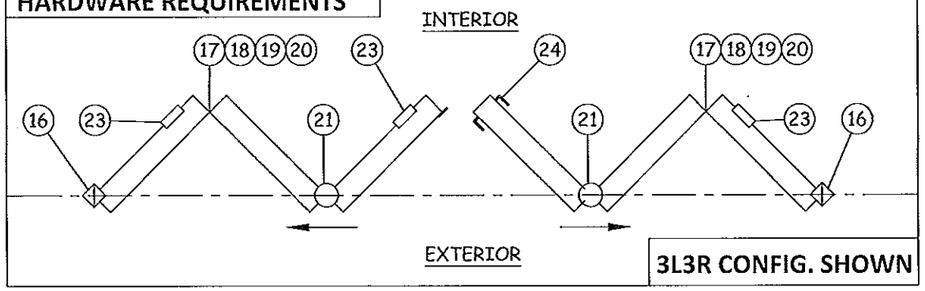

3L3R CONFIG. SHOWN

EVEN/EVEN PANEL COUNT TYP. HARDWARE REQUIREMENTS

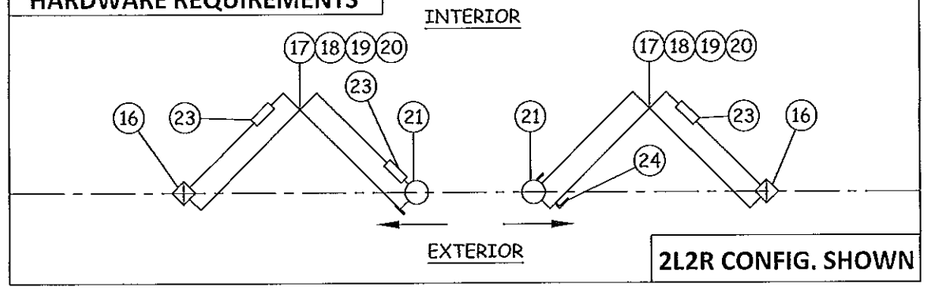

2L2R CONFIG. SHOWN

EVEN PANEL COUNT TYP. HARDWARE REQUIREMENTS

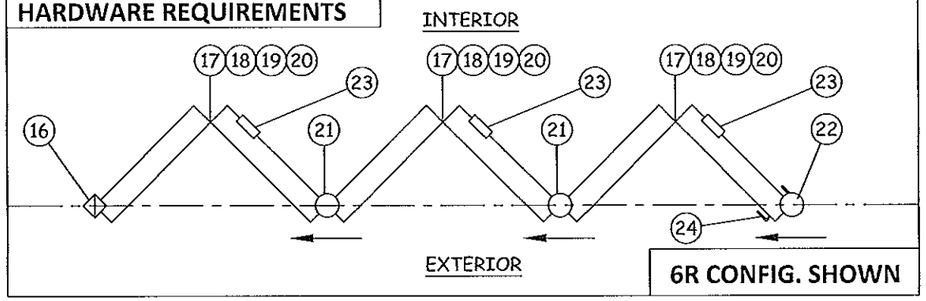

6R CONFIG. SHOWN

ODD/EVEN PANEL COUNT TYP. HARDWARE REQUIREMENTS

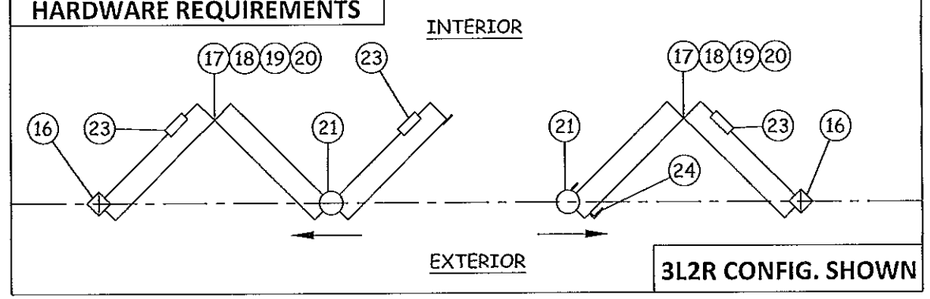

3L2R CONFIG. SHOWN

ODD/SWING PANEL COUNT TYP. HARDWARE REQUIREMENTS

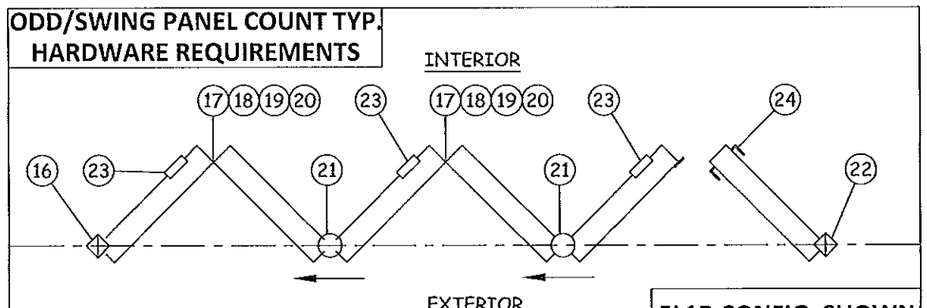

5L1R CONFIG. SHOWN

PANEL CT.	QUALIFIED CONFIGURATIONS								
1	1L	1R	-	-	-	-	-	-	-
2	1L1R	2L	2R	-	-	-	-	-	-
3	1L2R	2L1R	3L	3R	-	-	-	-	-
4	1L3R	3L1R	2L2R	4L	4R	-	-	-	-
5	1L4R	4L1R	2L3R	3L2R	5L	5R	-	-	-
6	1L5R	5R1L	2L4R	4R2L	3L3R	6L	6R	-	-
7	1L6R	6L1R	2L5R	5L2R	3L4R	4R3L	7L	7R	-
8	1L7R	7L1R	2L6R	6L2R	3L5R	5L3R	4L4R	8L	8R
9	1L8R	8L1R	2L7R	7L2R	3L6R	6R3L	4L5R	5L4R	-
10	2L8R	8L2R	3L7R	7L3R	4L6R	6L4R	5L5R	-	-
11	3L8R	8L3R	4L7R	7L4R	5L6R	6L5R	-	-	-
12	4L8R	8L4R	5L7R	7L5R	6L6R	-	-	-	-
13	5L8R	8L5R	6L7R	7L6R	-	-	-	-	-
14	6L8R	8L6R	7L7R	-	-	-	-	-	-
15	7L8R	8L7R	-	-	-	-	-	-	-
16	8L8R	-	-	-	-	-	-	-	-

Approved as complying with the Florida Building Code
Date 3/14/13
NOA# 12-0523.01
Miami Dade Product Control
By Ishaq I. Chaudhary

western windowsystems
5621 SOUTH 25TH STREET
PHOENIX, AZ 85040
PH: (602) 268-1300 FX: (602) 243-3119

TITLE: SERIES 9500 HURRICANE INSWING BI-FOLD DOOR APPROVED CONFIGURATIONS & HARDWARE REQUIREMENTS

PREPARED BY:
BUILDING DROPS, INC.
398 E. DANIA BEACH BLVD, #338
DANIA BEACH, FL 33004
PH: 954.399.8478 FX: 954.744.4738

REVISIONS

NO.	DESCRIPTION	BY	DATE

HERMES F. HERRERO, P.E.
FLORIDA P.E. INT. 75779
308 EAST DANIA BEACH BLVD. #338
DANIA BEACH, FL 33004
PERMIT CERT. OF AUTHORIZATION NO. 28378

DATE: 03.14.12
DWN BY: JLA
CHK BY: HFN
SCALE: NTS

DWG #: WWS001

SHEET: 10 OF 14

BILL OF MATERIALS

ITEM NO.	DESCRIPTION	PART NO.	MATERIAL	MANUFACTURER
1	E3 HEAD (THERMAL BREAK)	E9530 TB	AL. 6063-T5	SIERRA
1A	E3 HEAD	E9530	AL. 6063-T5	SIERRA
2	E3 JAMB (THERMAL BREAK)	E9501 TB	AL. 6063-T5	SIERRA
2A	E3 JAMB	E9501	AL. 6063-T5	SIERRA
3	FLUSH E3 THRESHOLD (TB)	E9533 TB	AL. 6063-T5	SIERRA
3A	FLUSH E3 THRESHOLD	E9533	AL. 6063-T5	SIERRA
4	HIGH LEG E3 THRESHOLD (TB)	E9532 TB	AL. 6063-T5	SIERRA
4A	HIGH LEG E3 THRESHOLD	E9532	AL. 6063-T5	SIERRA
5	U-CHANNEL E3 THRESHOLD	---	AL. 6063-T5	SIERRA
6	PANEL SASH (THERMAL BREAK)	E9504 TB	AL. 6063-T6	SIERRA
6A	PANEL SASH	E9504	AL. 6063-T6	SIERRA
7	ASTRAGAL (THERMAL BREAK)	E9511 TB	AL. 6063-T5	SIERRA
7A	ASTRAGAL	E9511	AL. 6063-T5	SIERRA
8	SASH COVER	E9505	AL. 6063-T6	SIERRA
9	HANDLE LOCK INSERT	E9506	AL. 6063-T6	SIERRA
10	GLAZING BEAD	E9507	AL. 6063-T6	SIERRA
11	DUST COVER	W1390	AL. 6063-T5	BANDLOCK
12	PANEL WEATHERSTRIPPING	W1391	FOAM	SCHLEGEL
13	FRAME WEATHERSTRIPPING	W1394	FOAM	SCHLEGEL
14	INT. GLAZING GASKET	W12512	70 DURO. EPDM	ESP
15	EXT. GLAZING GASKET	---	70 DURO. EPDM	ESP
16	PIVOT HINGE	H930S	S.S.	CENTOR (2-PC)
17	FLAT HINGE W/ HANDLE	H932S	S.S.	CENTOR (3-PC)
18	L/R OFFSET HINGE W/ HANDLE	H936S	S.S.	CENTOR (3-PC)
19	FLAT HINGE	H931S	S.S.	CENTOR (3-PC)
20	L/R OFFSET HINGE	---	S.S.	CENTOR (3-PC)
21	INT. CARRIER SET	H933S	S.S.	CENTOR (3-PC)
22	END CARRIER SET	---	S.S.	CENTOR (2-PC)
23	INTERNAL SHOOT BOLT	---	S.S.	HOPPE
24	MULTIPOINT LATCH W/ DEADBOLT	---	S.S.	HOPPE

NOTE: 'TB' DESIGNATES COMPONENT IS THERMALLY BROKEN.

1 E3 HEAD (THERMAL BREAK) ALUMINUM 6063-T5

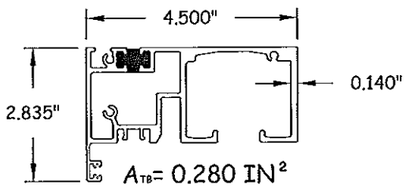

1A E3 HEAD ALUMINUM 6063-T5

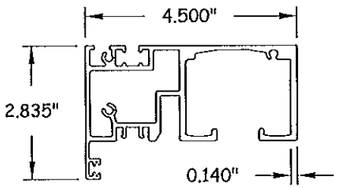

2 E3 JAMB (THERMAL BREAK) ALUMINUM 6063-T5

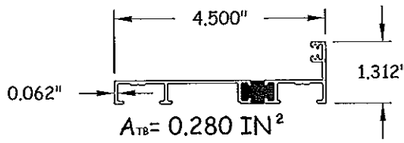

2A E3 JAMB ALUMINUM 6063-T5

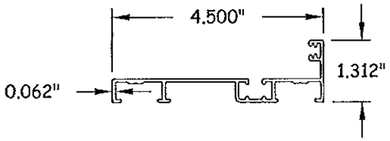

3 FLUSH E3 THESHOLD (THERMAL BREAK) ALUMINUM 6063-T5

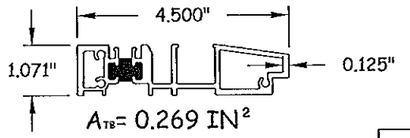

A_{TB}= DEBRIDGED AREA (IN²)

3A FLUSH E3 THESHOLD ALUMINUM 6063-T5

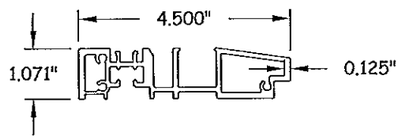

4 HIGH LEG E3 THESHOLD (THERMAL BREAK) ALUMINUM 6063-T5

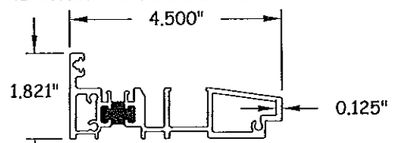

Approved as complying with th
Florida Building Code
Date 3/14/13
NOA# 12-0523.04
Miami Dade Product Control
By

western windowsystems
5621 SOUTH 25TH STREET
PHOENIX, AZ 85040
PH: (602) 268-1300 FX: (602) 243-3119

TITLE: SERIES 9500 HURRICANE INSWING BI-FOLD DOOR COMPONENTS & BILL OF MATERIALS

PREPARED BY:
BUILDING DROPS, INC.
398 E. DANIA BEACH BLVD. #338
DANIA BEACH, FL 33004
PH: 954.399.8478 FX: 954.744.4738

REVISIONS

NO.	DESCRIPTION	BY	DATE

3-21-2013
HERMES F. NORERO, P.E.
FLORIDA P.E. NO. 73777
391 EAST DANIA BEACH BLVD. #105
DANIA BEACH, FLORIDA 33004
PHONE: (954) 921-7781 FAX: (954) 921-8807
FBPE DEPT. OF PROFESSIONAL REGULATION NO. 28578

DATE: 03.14.12
DWN BY: JLA
CHK BY: HFN
SCALE: NTS

DWG #: WWS001

SHEET: 11 OF 14

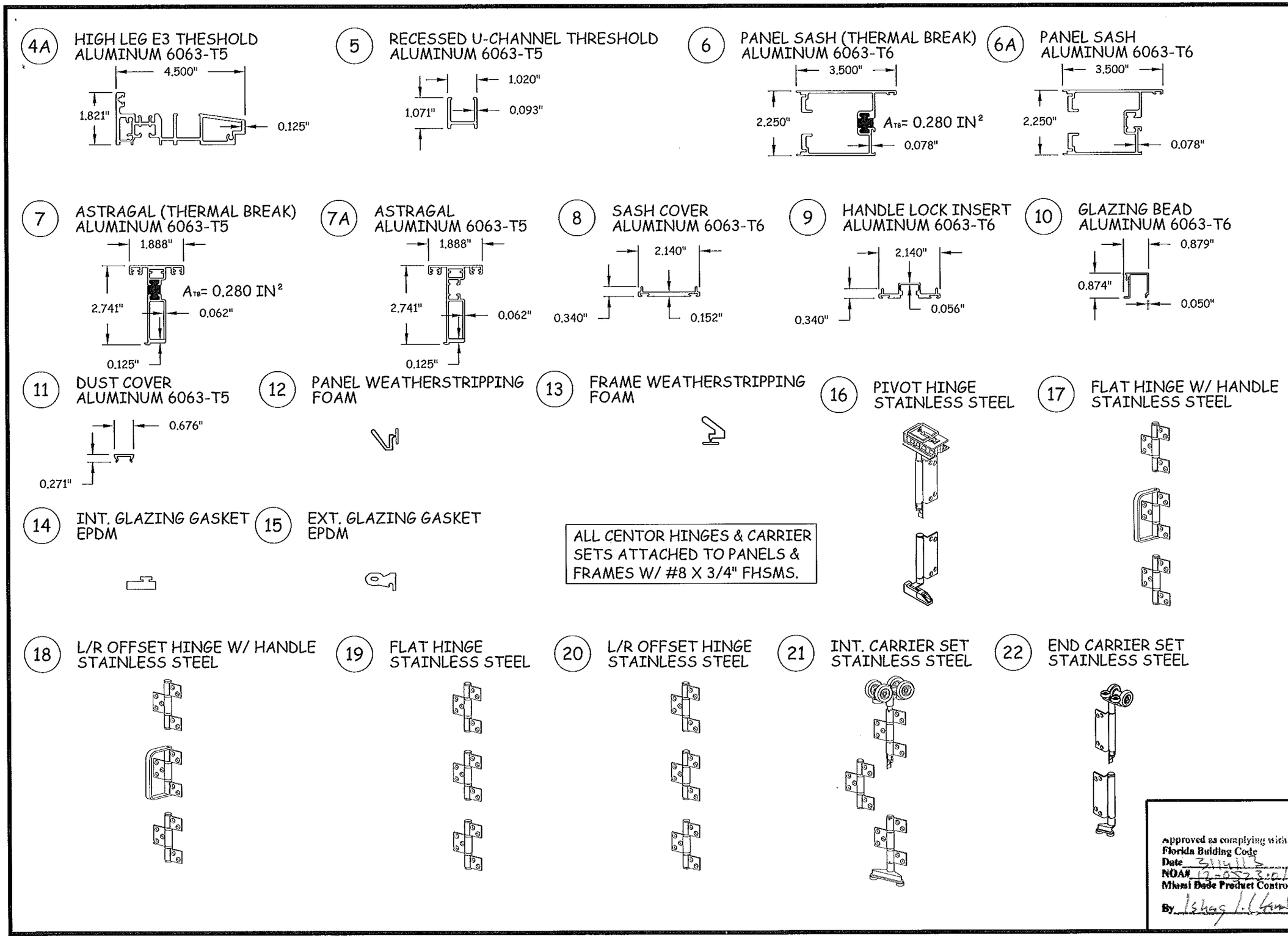

western windowsystems
5621 SOUTH 25TH STREET
PHOENIX, AZ 85040
PH: (602) 268-1300 FX: (602) 243-3119

TITLE: SERIES 9500 HURRICANE INSWING BI-FOLD DOOR COMPONENTS

PREPARED BY:
BUILDING DROPS, INC.
398 E. DANIA BEACH BLVD. #338
DANIA BEACH, FL 33004
PH: 954.399.8478 FX: 954.744.4738

REVISIONS

NO.	DESCRIPTION	BY	DATE

2-7-2013
HERMES F. NORERO, P.E.
FLORIDA P.E. NO. 73778
398 EAST DANIA BEACH BLVD. #338
DANIA BEACH, FL 33004
FBPE CERT. OF AUTHORIZATION NO. 23578

Approved as complying with the Florida Building Code
Date 3/14/13
NOA# 12-0523.01
Miami Dade Product Control
By Ishag I. Chandler

DATE: 03.14.12
DWN BY: JLA
CHK BY: HFN
SCALE: NTS

DWG #: WWS001

SHEET: 12 OF 14

(23) HLS9000 HOPPE INTERNAL SHOOT BOLT STAINLESS STEEL

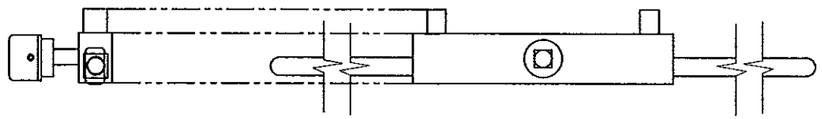

(24) HLS9000 HOPPE MULTIPOINT LATCH W/ DEADBOLT STAINLESS STEEL

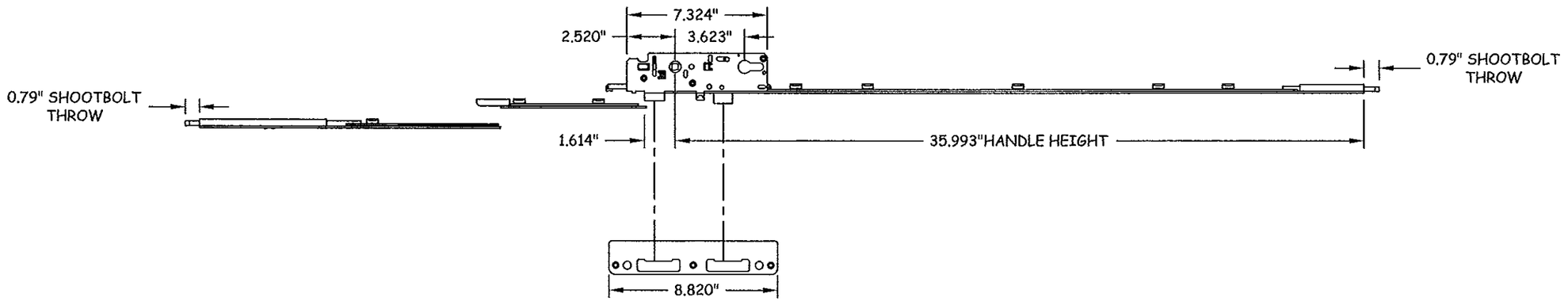

western windowsystems
5621 SOUTH 25TH STREET
PHOENIX, AZ 85040
PH: (602) 268-1300 FX: (602) 243-3119

TITLE: SERIES 9500 HURRICANE INSWING BI-FOLD DOOR COMPONENTS

PREPARED BY:
BUILDING DROPS, INC.
398 E. DANIA BEACH BLVD. #338
DANIA BEACH, FL 33004
PH: 954.399.8478 FX: 954.744.4738

REVISIONS

NO.	DESCRIPTION	BY	DATE

HERMES F. NORERO, P.E.
FLORIDA P. E. NO. 73778
398 EAST DANIA BEACH BLVD. #338
DANIA BEACH, FL 33004
FBPE CERT. OF AUTHORIZATION NO. 29578

Approved as complying with the Florida Building Code
Date 3/19/13
NOA# 12-0523.01
Miami Dade Product Control
By

DATE: 03.14.12
DWN BY: JLA
CHK BY: HFN
SCALE: NTS

DWG #: WWS001

SHEET: 13 OF 14

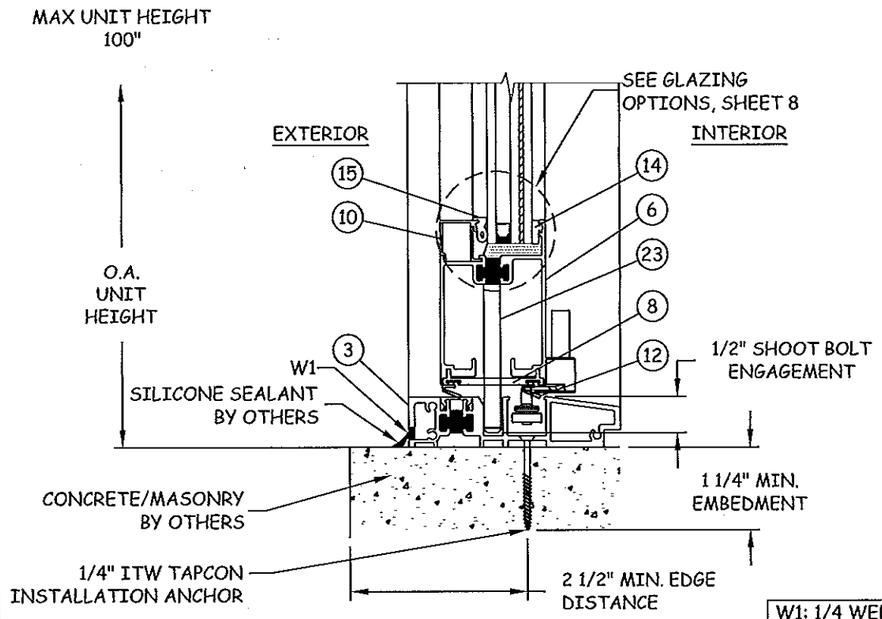

A ALT / 14 VERTICAL SECTION

SILL - CONCRETE/MASONRY
THRESHOLD - THERMALLY BROKEN

W1: 1/4 WEEP HOLE AT 18" O.C. IN WATER BARRIER AND FLUSH THRESHOLD

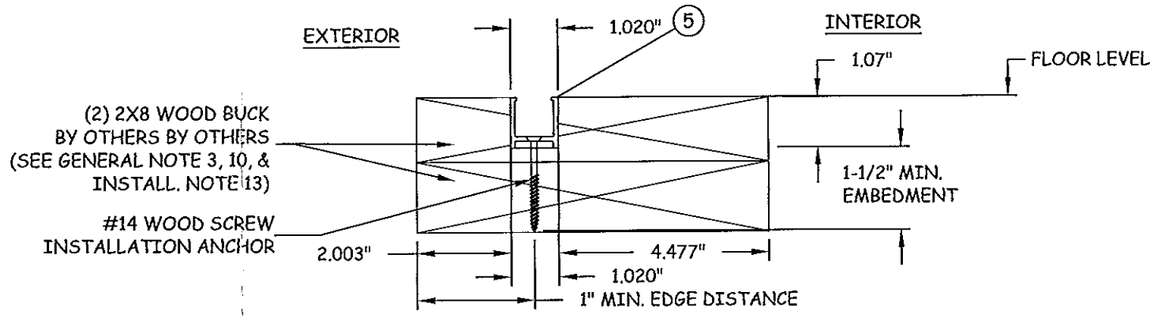

X / 14 RECESSED U-CHANNEL

2X8 WOOD BUCK INSTALLATION PREPARATION

U-CHANNEL THRESHOLD SHALL BE RECESSED AND/OR ROUTED TO ACCOMMODATE THESE COMPONENTS PRIOR TO INSTALLATION. ALL EDGE DISTANCES AND EMBEDMENTS FOR ANCHORS MUST BE MAINTAINED AS NOTED IN THIS SHEET.

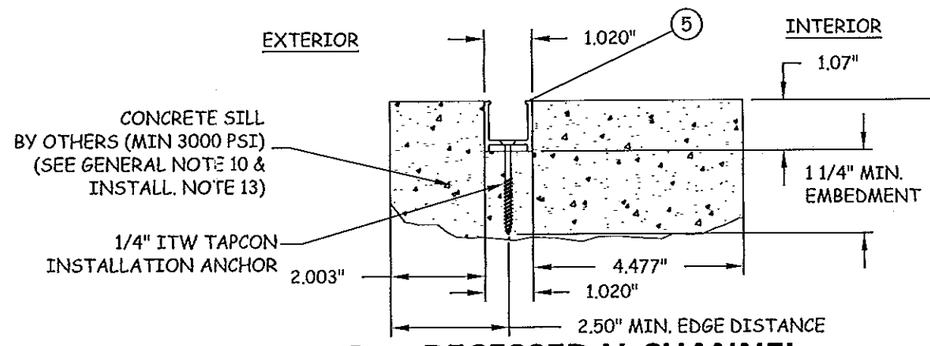

Y / 14 RECESSED U-CHANNEL

CONCRETE INSTALLATION PREPARATION

Approved as complying with the Florida Building Code
Date MAR 14, 2013
NOA# 12-0523.01
Miami Dade Product Control
By

western windowsystems
5621 SOUTH 25TH STREET
PHOENIX, AZ 85040
PH: (602) 268-1300 FX: (602) 243-3119

TITLE: SERIES 9500 HURRICANE INSWING BI-FOLD DOOR INSTALLATION PREPARATION DETAILS

PREPARED BY:
BUILDING DROPS, INC.
398 E. DANIA BEACH BLVD. #338
DANIA BEACH, FL 33004
PH: 954.399.8478 FX: 954.744.4738

REVISIONS

NO.	DESCRIPTION	BY	DATE

HERMES P. NORIEGA, P.E.
FLORIDA P. E. NO. 73778
398 EAST DANIA BEACH BLVD. #338
DANIA BEACH, FL 33004
FBPE CERT. OF AUTHORIZATION NO. 23578

DATE: 03.14.12 | DWN BY: JLA | CHK BY: HFN | SCALE: NTS

DWG #: WWS001

SHEET: 14 OF 14