MIAMI-DADE COUNTY
DEPARTMENT OF PERMITTING, ENVIRONMENT, AND REGULATORY AFFAIRS (PERA)
BOARD AND CODE ADMINISTRATION DIVISION

NOTICE OF ACCEPTANCE (NOA)

MIAMI-DADE COUNTY
PRODUCT CONTROL SECTION
11805 SW 26 Street, Room 208
Miami, Florida 33175-2474
T (786) 315-2590 F (786) 315-2599
www.miamidade.gov/pera/

Curv-A-Tech Corporation
930 West 23rd Street,
Hialeah, Fl. 33010

SCOPE:
This NOA is being issued under the applicable rules and regulations governing the use of construction materials. The documentation submitted has been reviewed and accepted by Miami-Dade County PERA -Product Control Section to be used in Miami Dade County and other areas where allowed by the Authority Having Jurisdiction (AHJ).

This NOA shall not be valid after the expiration date stated below. The Miami-Dade County Product Control Section (In Miami Dade County) and/or the AHJ (in areas other than Miami Dade County) reserve the right to have this product or material tested for quality assurance purposes. If this product or material fails to perform in the accepted manner, the manufacturer will incur the expense of such testing and the AHJ may immediately revoke, modify, or suspend the use of such product or material within their jurisdiction. PERA reserves the right to revoke this acceptance, if it is determined by Miami-Dade County Product Control Section that this product or material fails to meet the requirements of the applicable building code.
This product is approved as described herein, and has been designed to comply with the Florida Building Code, including the High Velocity Hurricane Zone.

DESCRIPTION: Series 715 Aluminum Outswing French Doors w/wo Sidelites-L.M.I.

APPROVAL DOCUMENT: Drawing No. **W12-19 Rev A**, titled "Series Alum French Door w/ sidelitws (L.M.I.)", sheets 1 through 14 of 14, prepared by AL-Farooq Corporation, dated 05/07/12 and last revised on AUG 23, 2012, signed and sealed by Javad Ahmad, P.E., bearing the Miami-Dade County Product Control Approval stamp with the Notice of Acceptance number and approval date by the Miami-Dade County Product Control Section.

MISSILE IMPACT RATING: Large and Small Missile Impact Resistant
Limitation:

1. Max Partial Alum Clad Plywood Panel not to exceed 38-1/4"W x 35-3/4" H for sidelites and 29-1/8"W x 35-1/4"H for door leaf, as glazed on sheet 3 and detailed in section Ⓟ in sheet 12.
2. Curv-A Tech SHW is under separate approval, when used lower DP of door, SHW or sidelite shall control.

LABELING: Each unit shall bear a permanent label with the manufacturer's name or logo, city, state and series and following statement: "Miami-Dade County Product Control Approved", noted herein.

RENEWAL of this NOA shall be considered after a renewal application has been filed and there has been no change in the applicable building code negatively affecting the performance of this product.

TERMINATION of this NOA will occur after the expiration date or if there has been a revision or change in the materials, use, and/or manufacture of the product or process. Misuse of this NOA as an endorsement of any product, for sales, advertising or any other purposes shall automatically terminate this NOA. Failure to comply with any section of this NOA shall be cause for termination and removal of NOA.

ADVERTISEMENT: The NOA number preceded by the words Miami-Dade County, Florida, and followed by the expiration date may be displayed in advertising literature. If any portion of the NOA is displayed, then it shall be done in its entirety.

INSPECTION: A copy of this entire NOA shall be provided to the user by the manufacturer or its distributors and shall be available for inspection at the job site at the request of the Building Official.
This NOA consists of this page 1 and evidence pages E-1, as well as approval document mentioned above.
The submitted documentation was reviewed by **Ishaq I. Chanda, P.E.**

MIAMI-DADE COUNTY APPROVED
8/23/12

NOTICE OF ACCEPTANCE: EVIDENCE SUBMITTED

A. DRAWINGS

1. Manufacturer's die drawings and sections
2. Drawing No. **W12-19 Rev A**, titled "Series Alum French Door w/ sidelitws (L.M.I.)", sheets 1 through 14 of 14, prepared by AL-Farooq Corporation, dated 05/07/12 and last revised on AUG 23, 2012, signed and sealed by Javad Ahmad, P.E.

B. TESTS

1. Test reports on: 1) Air Infiltration Test, per FBC, TAS 202-94
   2) Uniform Static Air Pressure Test, Loading per FBC TAS 202-94
   3) Water Resistance Test, per FBC, TAS 202-94
   4) Large Missile Impact Test per FBC, TAS 201-94
   5) Cyclic Wind Pressure Loading per FBC, TAS 203-94
   6) Forced Entry Test, per FBC 2411 3.2.1, TAS 202-94

   along with marked-up drawings and installation diagram of an outswing aluminum glass door w/ wo Sidelite, prepared by Fenestration Testing Lab., Inc., Test Report No. **FTL-6749**, dated 03/1212, signed and sealed by Marlin D. Brinston, P. E.

C. CALCULATIONS

1. Anchor verification calculations and structural analysis, complying with FBC-2010, prepared by Al Farooq Corporation, dated 05/14/12 and revised on AUG 07, 2012, signed and sealed by Javad Ahmad, P.E.
2. Glazing complies w/ ASTME-1300-02 & -04

D. QUALITY ASSURANCE

1. Miami Dade Department of Permitting, Environment, and Regulatory Affairs (PERA).

E. MATERIAL CERTIFICATIONS

1. Notice of Acceptance No. **11-0325.05** issued to Solutia, Inc. for their "**Saflex clear & color interlayer**", expiring on 05/21/16.

F. STATEMENTS

1. Statement letter of conformance and letter of no financial interest, prepared by Al Farooq Corporation, dated 05/01/12, signed and sealed by Javad Ahmad, P.E.
2. Lab compliance as part of the above referenced test report.

G. OTHER

1. Test proposal, dated 10/26/11 approved by PERA.

Ishaq I. Chanda

Ishaq I. Chanda, P.E.
Product Control Examiner
NOA No 12-0529.19
Expiration Date: August 30, 2017
Approval Date: August 30, 2012

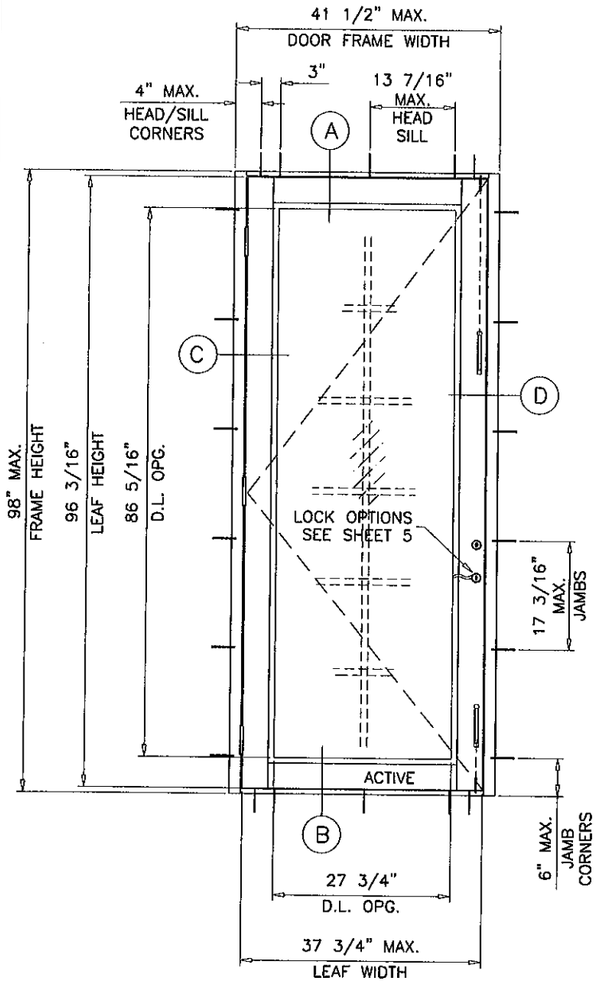

TYPICAL ELEVATION

(X)

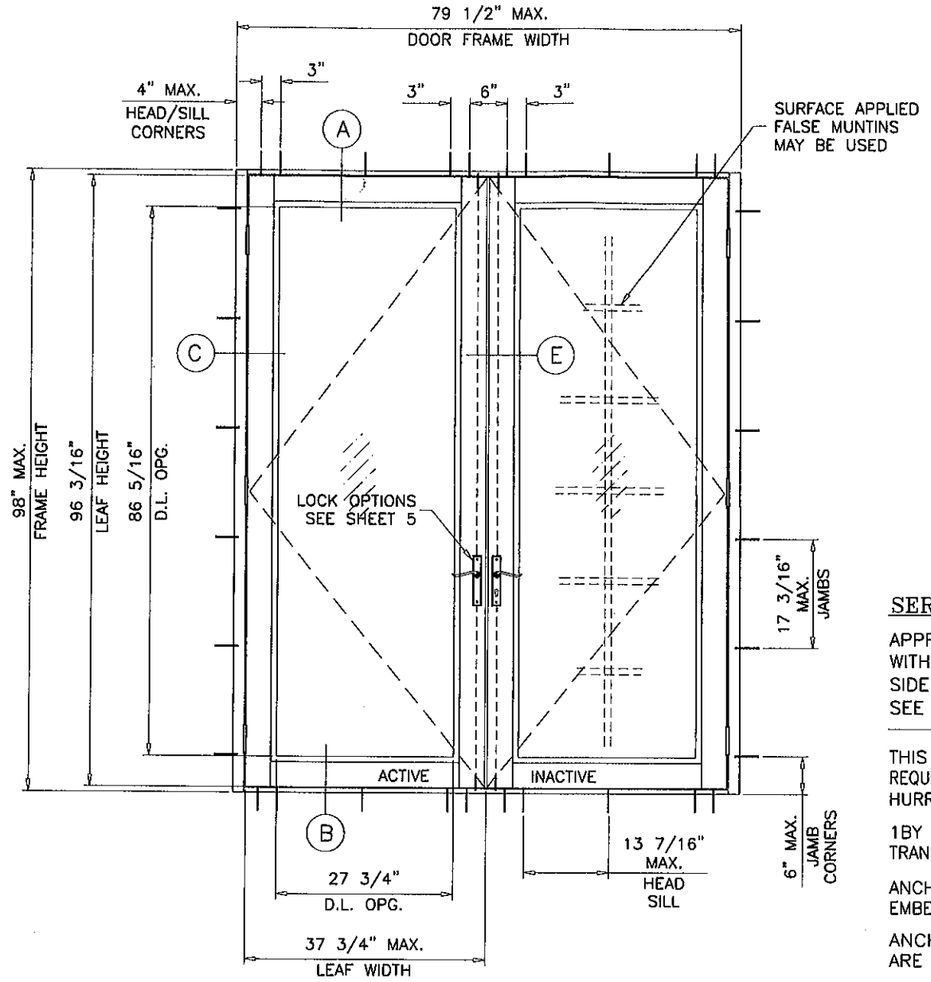

TYPICAL ELEVATION

(XX)

SERIES 715 ALUMINUM FRENCH DOOR W/ SIDELITES

APPROVAL APPLIES TO SINGLE (X) AND DOUBLE (XX) LEAF DOORS WITH OR WITHOUT SIDELITES.
SIDE LITES CAN BE ON ONE OR BOTH SIDES OF DOOR.
SEE SHEET 4 FOR DESIGN LOAD CAPACITIES.

THIS PRODUCT HAS BEEN DESIGNED AND TESTED TO COMPLY WITH THE REQUIREMENTS OF THE CURRENT FLORIDA BUILDING CODE INCLUDING HIGH VELOCITY HURRICANE ZONE (HVHZ).

1BY OR 2BY WOOD BUCKS BY OTHERS, MUST BE ANCHORED PROPERLY TO TRANSFER LOADS TO THE STRUCTURE.

ANCHORS SHALL BE AS LISTED, SPACED AS SHOWN ON DETAILS, ANCHORS EMBEDMENT TO BASE MATERIAL SHALL BE BEYOND WALL DRESSING OR STUCCO.

ANCHORING OR LOADING CONDITIONS NOT SHOWN IN THESE DETAILS ARE NOT PART OF THIS APPROVAL.

A LOAD DURATION INCREASE IS USED IN DESIGN OF ANCHORS INTO WOOD ONLY.

MATERIALS INCLUDING BUT NOT LIMITED TO STEEL/METAL SCREWS, THAT COME INTO CONTACT WITH OTHER DISSIMILAR MATERIALS SHALL MEET THE REQUIREMENTS OF CURRENT FLORIDA BLDG. CODE SECTION 2003.8.4.

DOOR OPTIONS

DOORS LOAD CAPACITY - PSF SINGLE DOORS (X)				
DOOR DIMS.			LAMINATED GLASS	
FRAME WIDTH	LEAF WIDTH	FRAME HEIGHT	EXT.(+)	INT.(-)
41-1/2"	37-3/4"	98"	65.0	70.0

DOORS LOAD CAPACITY - PSF DOUBLE (XX)				
DOOR DIMS.			LAMINATED GLASS	
FRAME WIDTH	LEAF WIDTH	FRAME HEIGHT	EXT.(+)	INT.(-)
79-1/2"	37-3/4"	98"	65.0	70.0

NOTE:
VERIFY COMPLIANCE WITH EGRESS LIMITATIONS WHERE REQUIRED.

NOTE:
FLUSH BOLTS AND LOCKS MUST BE ENGAGED TO HEAD AND SILL DURING PERIODS OF HURRICANE WARNING.

NOTE:
GLASS CAPACITIES ON THIS SHEET ARE BASED ON ASTM E1300-04 (3 SEC. GUSTS) AND FLORIDA BUILDING COMMISSION DECLARATORY STATEMENT DCA05-DEC-219

GLASS D.L.O. DIMS.

D.L.O. HEIGHT = FRAME HEIGHT - 11.687"
D.L.O. WIDTH (X DOORS) = FRAME WIDTH - 13.750"
D.L.O. WIDTH (XX DOORS) = (FRAME WIDTH - 24")/2

DOORS/SIDELITES ARE RATED FOR LARGE AND SMALL MISSILE IMPACT. SHUTTERS ARE NOT REQUIRED.

Approved as complying with the Florida Building Code
Date AUG 23, 2012
NOA# 12-0529.19
Miami Dade Product Control
By Ishaq I. Chanda

THIS NOA IS NOT VALID WITHOUT CORPORATE SEAL OF CURV-A-TECH CORPORATION AND A LABEL AFFIXED.

Engr: JAVAD. AHMAD
CIVIL
FLA. PE # 70592
C.A.N. 3538
AUG 22 2012

AL-FAROOQ CORPORATION
ENGINEERS & PRODUCT DEVELOPMENT
1235 S.W. 87 AVE
MIAMI, FLORIDA 33174
TEL. (305) 264-8100 FAX. (305) 262-6978
COMP-ANI\W12-19CTC

SERIES 715 ALUM FRENCH DOOR W/ SIDELITES (L.M.I.)
CURV-A-TECH CORPORATION
930 W. 23rd STREET
HIALEAH, FL 33010
TEL. (305) 888-9631 FAX. (305) 888-9969

revisions:

no	date	by	description
A	08.22.12	RER	REV. PER COMMENTS

date: 05-07-12
scale: 1/2"=1'-0"
dr. by: HAMID
chk. by:

drawing no.
W12-19

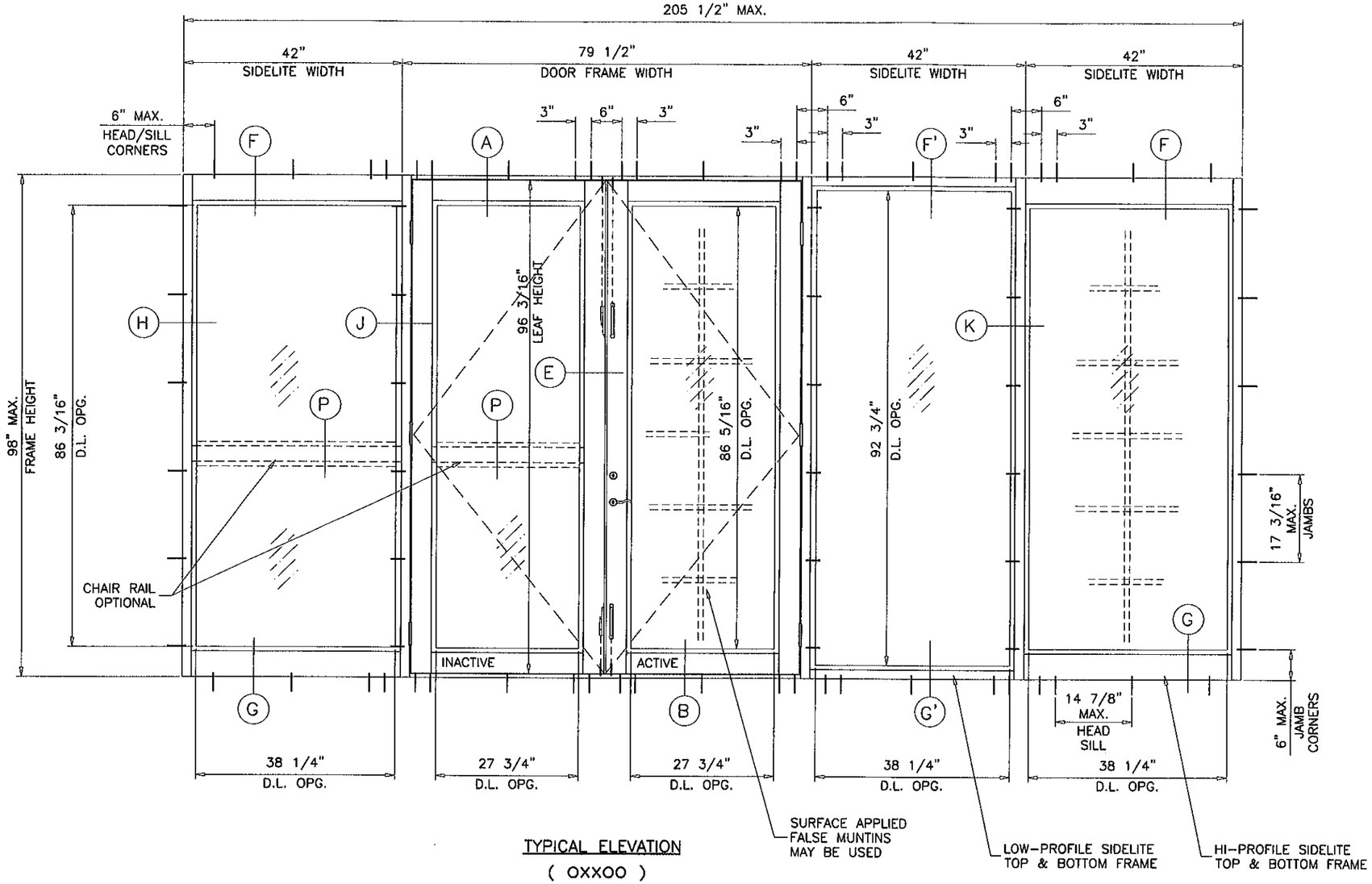

TYPICAL ELEVATION

(OXXOO)

SIDELITE OPTIONS

Approved as complying with the Florida Building Code
Date 8/23/12
NOA# 12-0529.04
Miami Dade Product Control
By Ishaq I. Chande

NOTES:
1. DOORS ARE VIEWED FROM OUTSIDE.
2. FRENCH DOORS WITHOUT INSECT SCREENS.

NOTE:
MAX. PARTIAL ALUM CLAD PLYWOOD PANEL NOT TO EXCEED
FOR SIDELITE 38-1/4" WIDTH X 35-3/4" HEIGHT
FOR DOOR 29-1/8" WIDTH X 35-1/4" HEIGHT

GLASS D.L.O. DIMS.

D.L.O. HEIGHT (HIGH PROFILE SIDELITE) = FRAME HEIGHT - 11.750"
D.L.O. WIDTH (LOW PROFILE SIDELITE) = FRAME WIDTH - 5.250"
D.L.O. WIDTH (SIDELITE) = FRAME WIDTH - 4.250"
D.L.O. HEIGHT (DOOR) = FRAME HEIGHT - 11.687"
D.L.O. WIDTH (X DOORS) = FRAME WIDTH - 13.750"
D.L.O. WIDTH (XX DOORS) = (FRAME WIDTH - 24")/2

Engr: JAVAD AHMAD
CIVIL
FLA. PE # 70592
C.A.N. 3538
AUG 22 2012

AL-FAROOQ CORPORATION
ENGINEERS & PRODUCT DEVELOPMENT
1235 S.W. 87 AVE
MIAMI, FLORIDA 33174
TEL (305) 264-8100 FAX. (305) 262-6978
COMP-ANL\W12-19CTC

SERIES 715 ALUM FRENCH DOOR W/ SIDELITES (L.M.I.)

CURV-A-TECH CORPORATION
930 W. 23rd STREET
HIALEAH, FL 33010
TEL (305) 888-9631 FAX. (305) 888-9969

revisions:

no	date	by	description
A	08.22.12		REV. PER RER COMMENTS

date: 05-07-12
scale: 1/2"=1'-0"
dr. by: HAMID
chk. by:

drawing no. W12-19

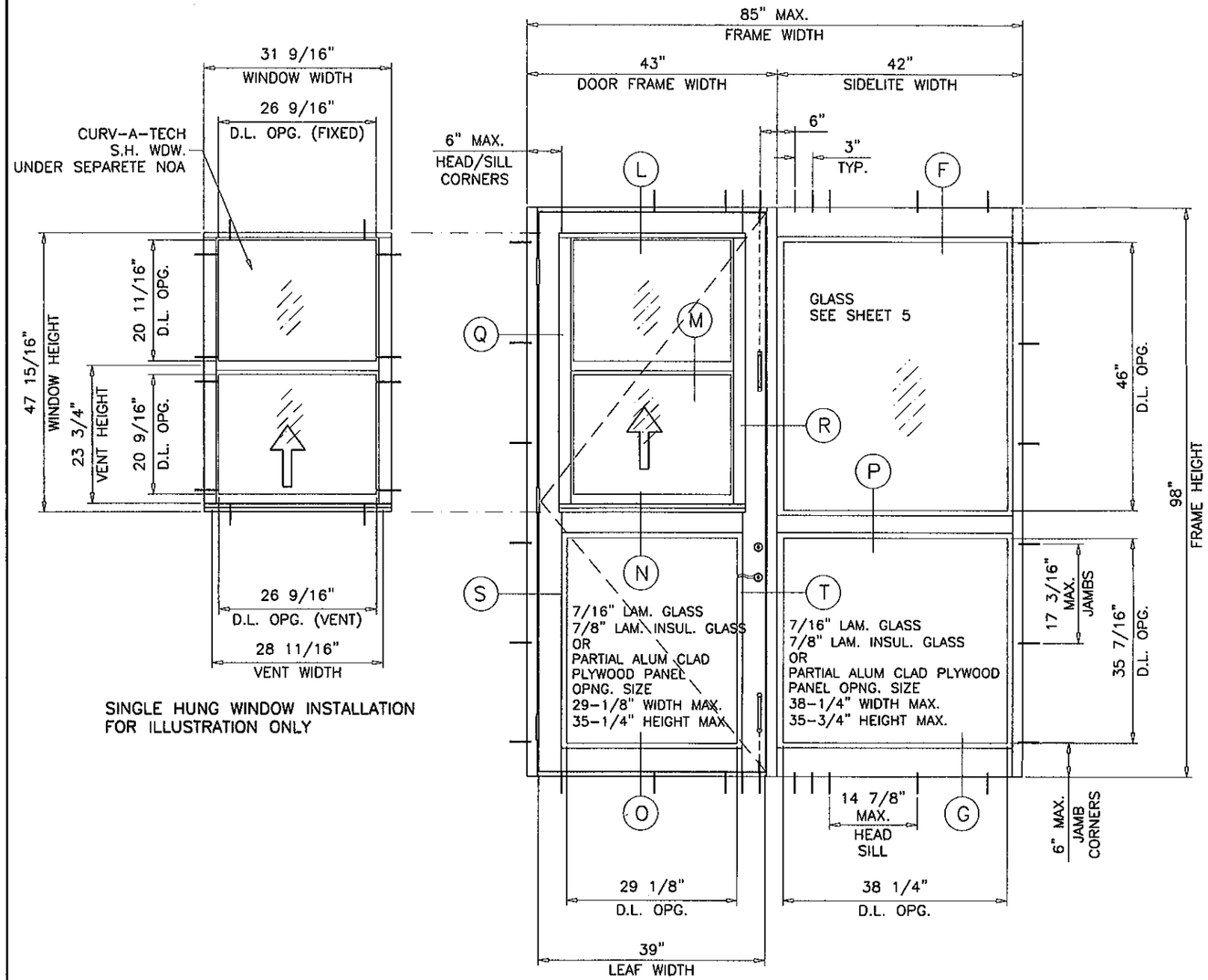

TYPICAL ELEVATION
(XO)

SINGLE LEAF DOOR WITH SERIES 925 SINGLE HUNG WDW. INSERT

NOTE:
DOORS WITH S.H. WINDOW INSERT (UNDER SEPARATE NOA)
MAY BE INSTALLED WITH OR WITHOUT SIDELITES.
SEE SHEET 4 FOR SIDELITE CAPACITY.

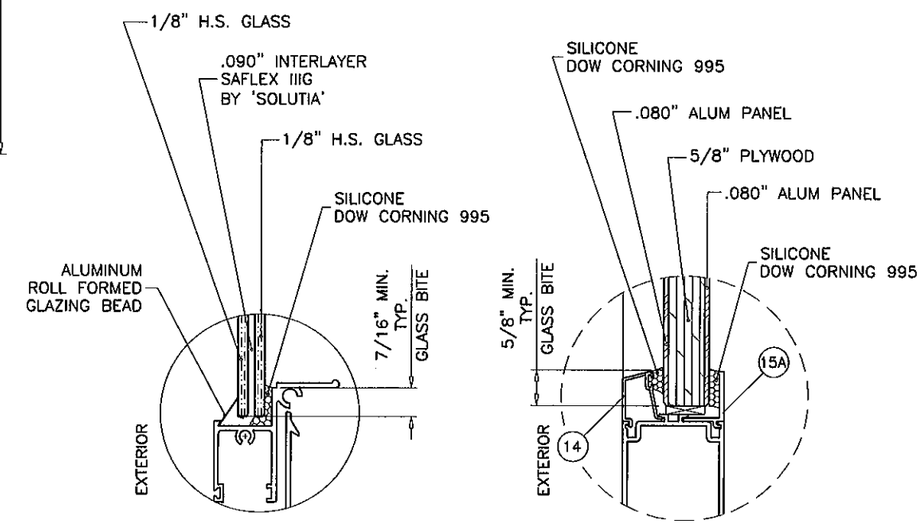

S.H. WINDOW
5/16" LAM. GLASS

DOOR
PARTIAL ALUM CLAD PLYWOOD

GLAZING DETAILS

WINDOW INSERT OPTION

SINGLE LEAF (X) DOORS WITH CURV-A-TECH S.H. WDW. INSERT			
DESIGN LOAD CAPACITY - PSF			
DOOR FRAME WIDTH (INCHES)	DOOR FRAME HEIGHT (INCHES)	7/16" LAM. GLASS 7/8" INSUL. LAM. GLASS PARTIAL ALUM CLAD PLYWOOD	
		EXT.(+)	INT.(-)
43"	98"	65.0	70.0

NOTE:
LOWER DESIGN PRESSURE OF SINGLE LEAF DOOR
OR SINGLE HUNG WINDOW (UNDER SEPARATE APPROVAL)
OR SIDELITE SHALL CONTROL THE ENTIRE ASSEMBLY.

Engr: JAVAD AHMAD
CIVIL
FLA. PE # 70592
C.A.N. 3538
AUG 22 2012

Approved as complying with the Florida Building Code
Date 8/23/12
NOA# 12-0529.19
Miami Dade Product Control
By Ishaq I. Ahmad

AL-FAROOQ CORPORATION
ENGINEERS & PRODUCT DEVELOPMENT
1235 S.W. 87 AVE
MIAMI, FLORIDA 33174
TEL. (305) 264-8100 FAX. (305) 262-6978

COMP-ANL\W12-19CTC

SERIES 715 ALUM FRENCH DOOR W/ SIDELITES (L.M.I.)

CURV-A-TECH CORPORATION
930 W. 23rd STREET
HIALEAH, FL 33010
TEL. (305) 888-9631 FAX. (305) 888-9969

revisions:			
no	date	by	description
A	08.22.12		REV. PER RER COMMENTS

date: 05-07-12
scale: 1/2"=1'-0"
dr. by: HAMID
chk. by:

drawing no.
W12-19

DESIGN LOAD CAPACITY – PSF
STATIONARY PANEL (0) OR DOORS WITH SIDELITES
(SEE NOTE BELOW)

SIDELITE WIDTH INCHES	SIDELITE FRAME HEIGHT INCHES	SIDELITE TO SIDELITE				SIDELITE TO DOOR			
		W/O REINF.		WITH REINF.		W/O REINF.		WITH REINF.	
		EXT.(+)	INT.(–)	EXT.(+)	INT.(–)	EXT.(+)	INT.(–)	EXT.(+)	INT.(–)
24	80	65.0	70.0	65.0	70.0	65.0	70.0	65.0	70.0
30		65.0	70.0	65.0	70.0	65.0	70.0	65.0	70.0
36		65.0	70.0	65.0	70.0	65.0	70.0	65.0	70.0
42		65.0	70.0	65.0	70.0	65.0	70.0	65.0	70.0
48		56.9	61.3	56.9	61.3	56.9	61.3	56.9	61.3
24	84	65.0	70.0	65.0	70.0	65.0	70.0	65.0	70.0
30		65.0	70.0	65.0	70.0	65.0	70.0	65.0	70.0
36		65.0	70.0	65.0	70.0	65.0	70.0	65.0	70.0
42		65.0	70.0	65.0	70.0	65.0	70.0	65.0	70.0
48		56.9	61.3	56.9	61.3	56.9	61.3	56.9	61.3
24	90	65.0	70.0	65.0	70.0	65.0	70.0	65.0	70.0
30		65.0	70.0	65.0	70.0	65.0	70.0	65.0	70.0
36		65.0	70.0	65.0	70.0	65.0	70.0	65.0	70.0
42		65.0	65.9	65.0	70.0	65.0	65.8	65.0	70.0
45		60.7	62.3	60.7	65.3	60.7	64.0	60.7	65.3
24	96	65.0	70.0	65.0	70.0	65.0	67.4	65.0	70.0
30		65.0	70.0	65.0	70.0	61.8	61.8	65.0	70.0
36		61.3	61.3	65.0	70.0	57.3	57.3	65.0	70.0
42		53.7	53.7	65.0	70.0	53.7	53.7	65.0	70.0
24	98	65.0	70.0	65.0	70.0	63.2	63.2	65.0	70.0
30		65.0	67.8	65.0	70.0	58.0	58.0	65.0	70.0
36		57.5	57.5	65.0	70.0	53.7	53.7	65.0	70.0
42		50.3	50.3	65.0	70.0	50.3	50.3	65.0	70.0

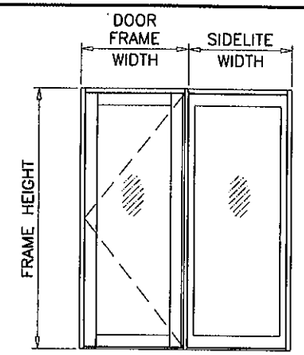

(XO)
(OX)

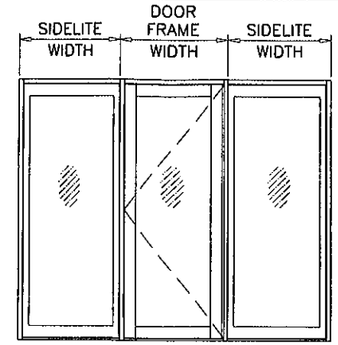

(OXO)

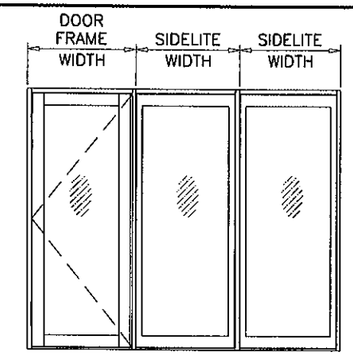

(XOO)
(OOX)

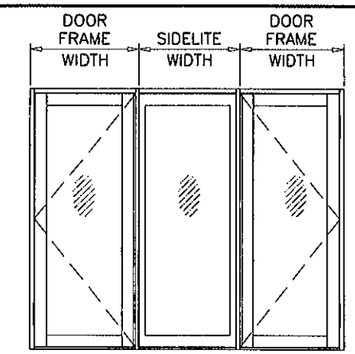

(XOX)

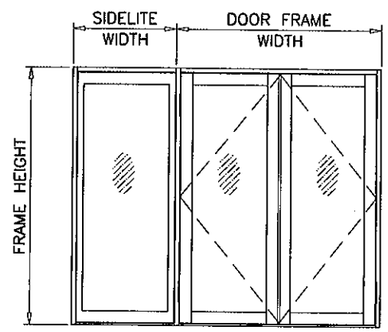

(OXX)
(XXO)

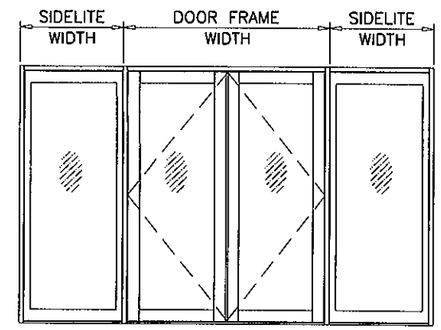

(OXXO)

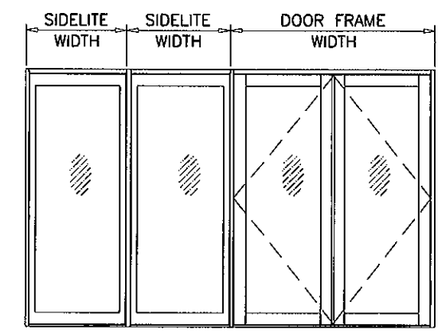

(XXOO)
(OOXX)

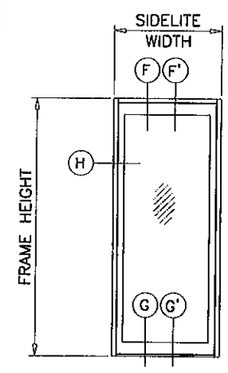

(O)

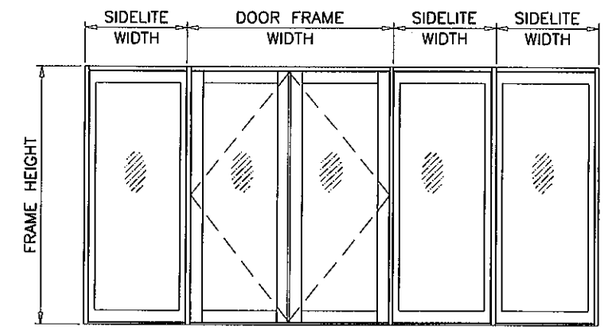

(OXXOO)
(OOXXO)

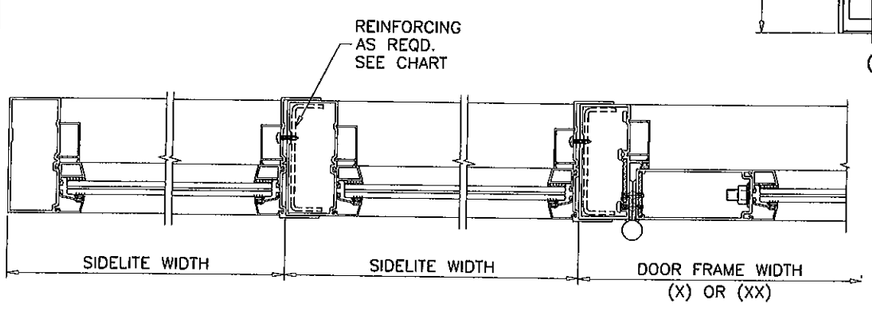

SIDELITE TO SIDELITE

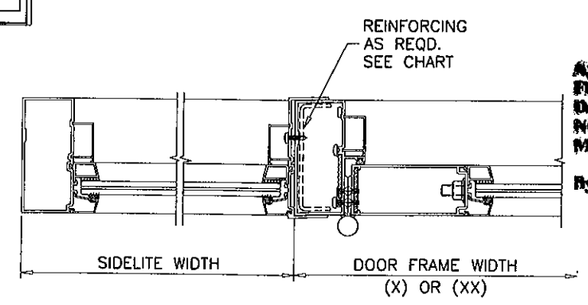

SIDELITE TO DOOR

Approved as complying with the Florida Building Code
Date 8/23/12
NOA# 12-0529.19
Miami Dade Product Control
By Shaq I. Chanda

NOTE:
GLASS CAPACITIES ON THIS SHEET ARE BASED ON ASTM E1300-04 (3 SEC. GUSTS) AND FLORIDA BUILDING COMMISSION DECLARATORY STATEMENT DCA05-DEC-219

NOTE:
FOR DOORS CAPACITIES SEE SHEET 1.
FOR SIDELITE CAPACITIES SEE CHART ABOVE.
LOWER VALUES FROM DOOR OR SIDELITE CHART WILL APPLY TO ENTIRE SYSTEM.

Engr: JAVAD AHMAD
CIVIL
FLA. PE # 70592
C.A.N. 3538
AUG 22 2012

AL-FAROOQ CORPORATION
ENGINEERS & PRODUCT DEVELOPMENT
1235 S.W. 87 AVE
MIAMI, FLORIDA 33174
TEL. (305) 264-8100 FAX. (305) 262-6978

COMP-ANL\W12-19CTC

SERIES 715 ALUM FRENCH DOOR W/ SIDELITES (L.M.I.)

CURV-A-TECH CORPORATION
930 W. 23rd STREET
HIALEAH, FL 33010
TEL. (305) 888-9631 FAX. (305) 888-9969

revisions:			
no	date	by	description
A	08.22.12		REV. PER RER COMMENTS

date: 05-07-12
scale: 1/2"=1'-0"
dr. by: HAMID
chk. by:

drawing no.
W12-19

LOCK OPTIONS:

ACTIVE LEAF:

SURFACE MOUNT DEAD BOLT LOCK BY 'SULLIVAN & ASSOC.'
AT 45" FROM BOTTOM, KEY OPERATED ON
EXTERIOR AND THUMB TURN ON INTERIOR
FASTENED TO ACTIVE LEAF LOCK STILE WITH
(2) 1/4-28 X 2-1/2" OH MS
LEVER TYPE METALLIC HANDLE AT 37" FROM
BOTTOM, FASTENED TO ACTIVE LEAF LOCK STILE
WITH (2) #8-32 X 1-3/4" PH MS.

CONCEALED FLUSH BOLTS BY 'SULLIVAN & ASSOC.'
MANUALLY OPERATED LEVERS MOUNTED ON STILE FACE,
LOCATED AT 12" AND 68" FROM BOTTOM
FASTENED TO LOCK STILE WITH
#8 X 3/4" FH SMS (2) SCREWS PER BOLT

INACTIVE LEAF

CONCEALED FLUSH BOLTS BY 'SULLIVAN & ASSOC.'
MANUALLY OPERATED LEVERS MOUNTED ON
INSIDE FACE OF LEAF STILE LOCATED AT
28" FROM TOP AND 12" FROM BOTTOM
FASTENED TO LOCK STILE WITH
#8 X 3/4" FH SMS (2) PER BOLT

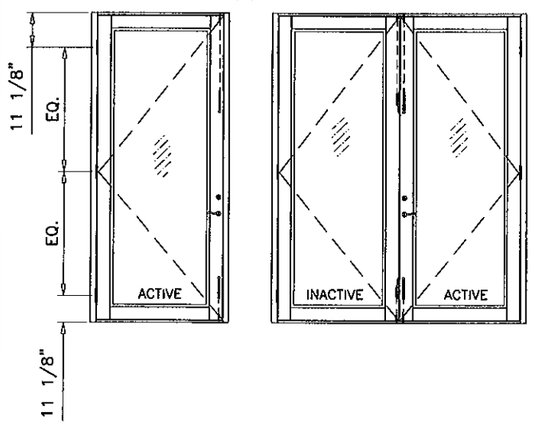

ACTIVE LEAF:

4 POINT LOCK SYSTEM BY 'INTERLOCK' AT 39"
FROM BOTTOM
HANDLE ACTIVATES DEAD BOLT AND SHOOT BOLTS
ENGAGING AT HEAD AND SILL
KEY OPERATED ON EXTERIOR AND THUMB TURN ON
INTERIOR
FASTENED TO ACTIVE LEAF LOCK STILE WITH
(2) #8-32 X 2" OH MS

INACTIVE LEAF:

CONCEALED FLUSH BOLTS BY 'SULLIVAN & ASSOC.'
MANUALLY OPERATED LEVERS MOUNTED ON STILE FACE,
LOCATED AT 12" AND 68" FROM BOTTOM
FASTENED TO LOCK STILE WITH
#8 X 3/4" FH SMS (2) SCREWS PER BOLT

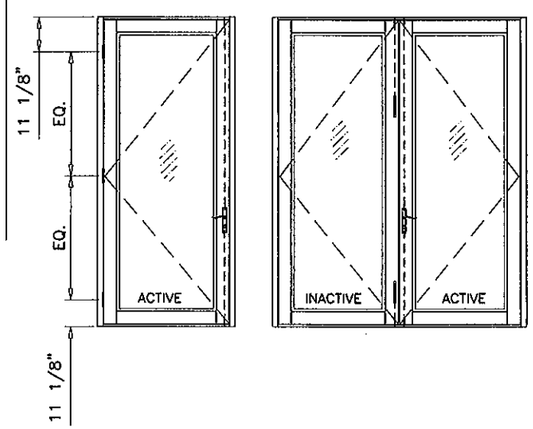

ACTIVE LEAF:

4 POINT LOCK SYSTEM BY 'INTERLOCK' AT 39"
FROM BOTTOM
HANDLE ACTIVATES DEAD BOLT AND SHOOT BOLTS
ENGAGING AT HEAD AND SILL
KEY OPERATED ON EXTERIOR AND THUMB TURN ON
INTERIOR
FASTENED TO ACTIVE LEAF LOCK STILE WITH
(2) #8-32 X 2" OH MS

INACTIVE LEAF:

2 POINT LOCK SYSTEM BY 'INTERLOCK' AT 39"
FROM BOTTOM
HANDLE ACTIVATES SHOOT BOLTS ENGAGING AT
HEAD AND SILL
FASTENED TO INACTIVE LEAF LOCK STILE WITH
(2) #8-32 X 2" OH MS

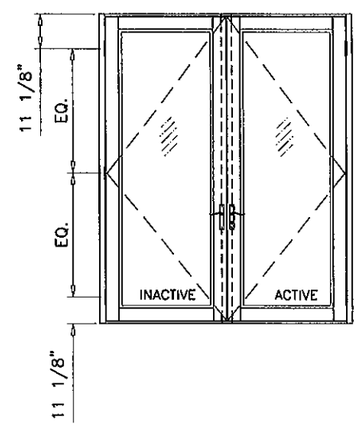

ACTIVE LEAF:

4 POINT LOCK SYSTEM BY 'INTERLOCK' AT 39"
FROM BOTTOM
HANDLE ACTIVATES DEAD BOLT AND SHOOT BOLTS
ENGAGING AT HEAD AND SILL
KEY OPERATED ON EXTERIOR AND THUMB TURN ON
INTERIOR
FASTENED TO ACTIVE LEAF LOCK STILE WITH
(2) #8-32 X 2" OH MS

INACTIVE LEAF:

CONCEALED FLUSH BOLTS BY 'SULLIVAN & ASSOC.'
MANUALLY OPERATED LEVERS MOUNTED ON STILE FACE,
LOCATED AT 12" AND 68" FROM BOTTOM
FASTENED TO LOCK STILE WITH
#8 X 3/4" FH SMS (2) SCREWS PER BOLT

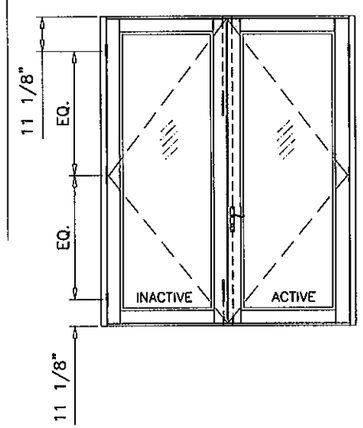

HINGES:

ALUMINUM/ST. STEEL HINGES BY 'SULLIVAN & ASSOC.
(3) HINGES PER LEAF AT 11-1/8" FROM TOP & BOTTOM
AND AT MIDSPAN
ST. STEEL HINGES REQUIRE BACK-UP PLATES

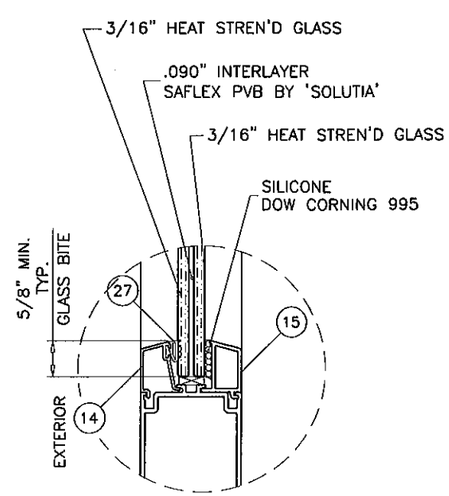

7/16" LAM. GLASS

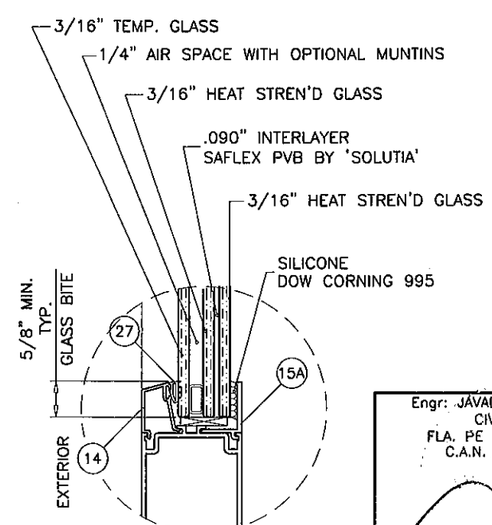

7/8" OVERALL INSUL. LAM. GLASS

GLAZING OPTIONS

Approved as complying with the Florida Building Code
Date: 8/23/12
NOA# 12-0529.19
Miami Dade Product Control
By Shaq L. Chan

Engr: JAVAD AHMAD
CIVIL
FLA. PE # 70592
C.A.N. 3538

AUG 22 2012

AL-FAROOQ CORPORATION
ENGINEERS & PRODUCT DEVELOPMENT
1235 S.W. 87 AVE
MIAMI, FLORIDA 33174
TEL. (305) 264-8100 FAX. (305) 262-6978
COMP-ANL\W12-19CTC

SERIES 715 ALUM FRENCH DOOR W/ SIDELITES (L.M.I.)

CURV-A-TECH CORPORATION
930 W. 23rd STREET
HIALEAH, FL 33010
TEL. (305) 888-9631 FAX. (305) 888-9969

revisions:

no	date	by	description
A	08.22.12		REV. PER PER COMMENTS

date: 05-07-12
scale: 3/8" = 1"
dr. by: HAMID
chk. by:

drawing no.
W12-19

sheet 5 of 14

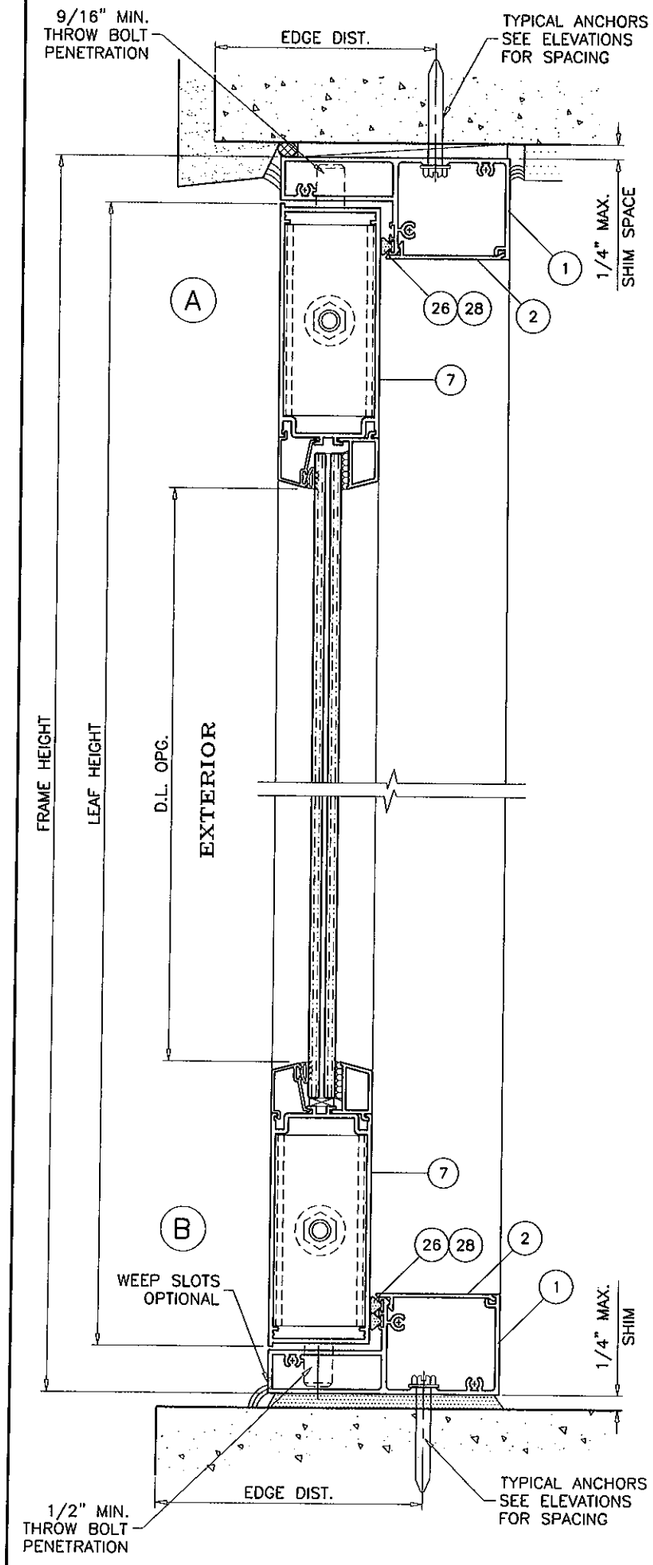

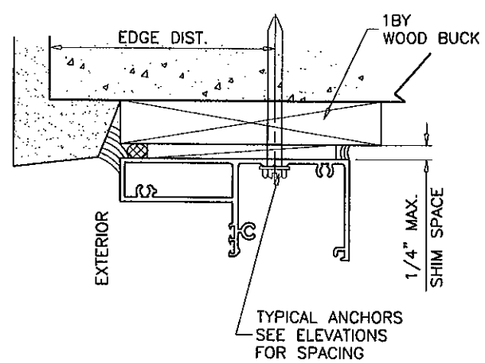

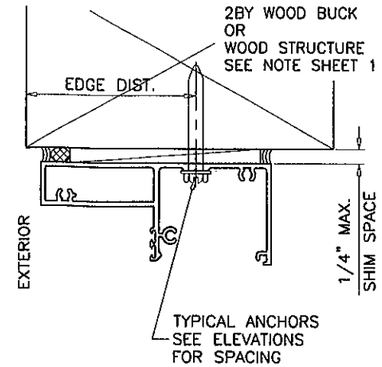

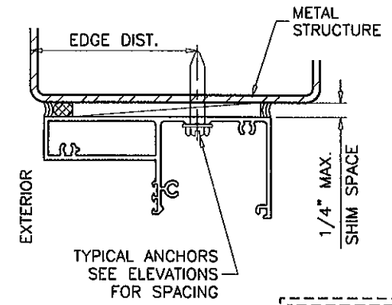

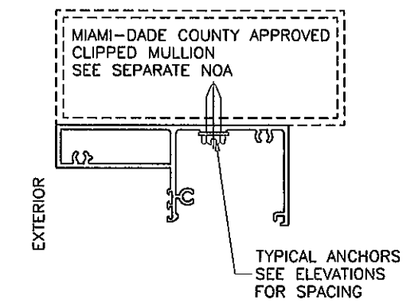

WOOD BUCKS AND METAL STRUCTURE NOT BY CURV-A-TECH CORP. MUST SUSTAIN LOADS IMPOSED BY GLAZING SYSTEM AND TRANSFER THEM TO THE BUILDING STRUCTURE.

TYPICAL ANCHORS: SEE ELEV. FOR SPACING

1/4" DIA. ULTRACON BY 'ELCO' (Fu=177 KSI, Fy=155 KSI)

INTO 2BY WOOD BUCKS OR WOOD STRUCTURES
1-1/2" MIN. PENETRATION INTO WOOD

THRU 1BY BUCKS INTO CONC. OR MASONRY
1-1/4" MIN. EMBED INTO CONC. OR MASONRY

DIRECTLY INTO CONC. OR MASONRY
1-1/4" MIN. EMBED INTO CONC. OR MASONRY

#14 SMS OR SELF DRILLING SCREWS (GRADE 2 CRS)

INTO MIAMI-DADE COUNTY APPROVED MULLIONS (MIN. THK. = 1/8")
INTO METAL STRUCTURES
STEEL : 1/8" THK. MIN. (Fy = 36 KSI MIN.)
ALUMINUM : 1/8" THK. MIN. (6063-T5 MIN.)
(STEEL IN CONTACT WITH ALUMINUM TO BE PLATED OR PAINTED)

TYPICAL EDGE DISTANCE

INTO CONCRETE AND MASONRY = 2-1/2" MIN.
INTO WOOD STRUCTURE = 1" MIN.
INTO METAL STRUCTURE = 3/4" MIN.

CONCRETE AT HEAD, SILL OR JAMBS f'c = 3000 PSI MIN.
C-90 HOLLOW/FILLED BLOCK AT JAMBS f'm = 2000 PSI MIN.

ANCHORS MAY BE HEX OR FLAT HEAD.

SEALANTS:

ALL JOINTS AND FRAME CONNECTIONS SEALED WITH 'SCHNEE MOREHEAD 5504' SEALANT.

Approved as complying with the Florida Building Code
Date 8/23/12
NOA# 12-0529.19
Miami Dade Product Control
By [signature]

Engr: JAVAD AHMAD
CIVIL
FLA. PE # 70592
C.A.N. 3538
AUG 22 2012

DOOR DETAILS

AL-FAROOQ CORPORATION
ENGINEERS & PRODUCT DEVELOPMENT
1235 S.W. 87 AVE
MIAMI, FLORIDA 33174
TEL. (305) 264-8100 FAX. (305) 262-6978
COMP-ANL\W12-19CTC

SERIES 715 ALUM FRENCH DOOR W/ SIDELITES (L.M.I.)

CURV-A-TECH CORPORATION
930 W. 23rd STREET
HIALEAH, FL 33010
TEL. (305) 888-9631 FAX. (305) 888-9969

revisions:

no	date	by	description
A	08.22.12		REV. PER RER COMMENTS

date: 05-07-12
scale: 3/8" = 1"
dr. by: HAMID
chk. by:

drawing no. W12-19

sheet 6 of 14

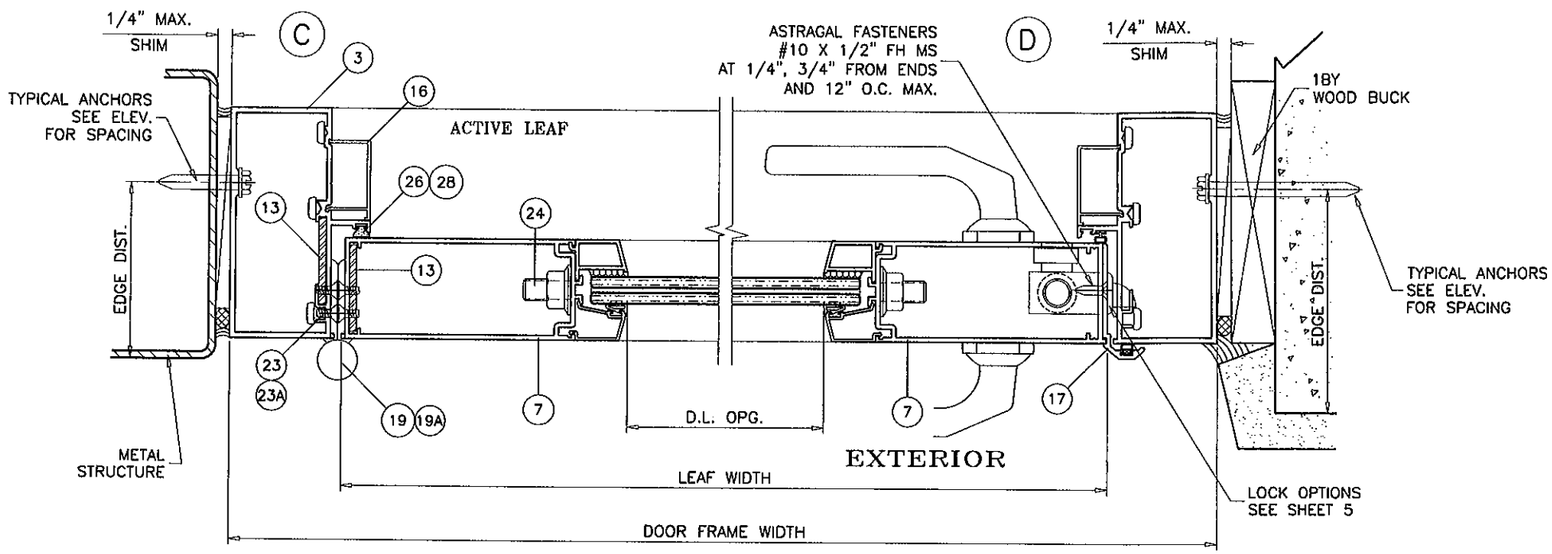

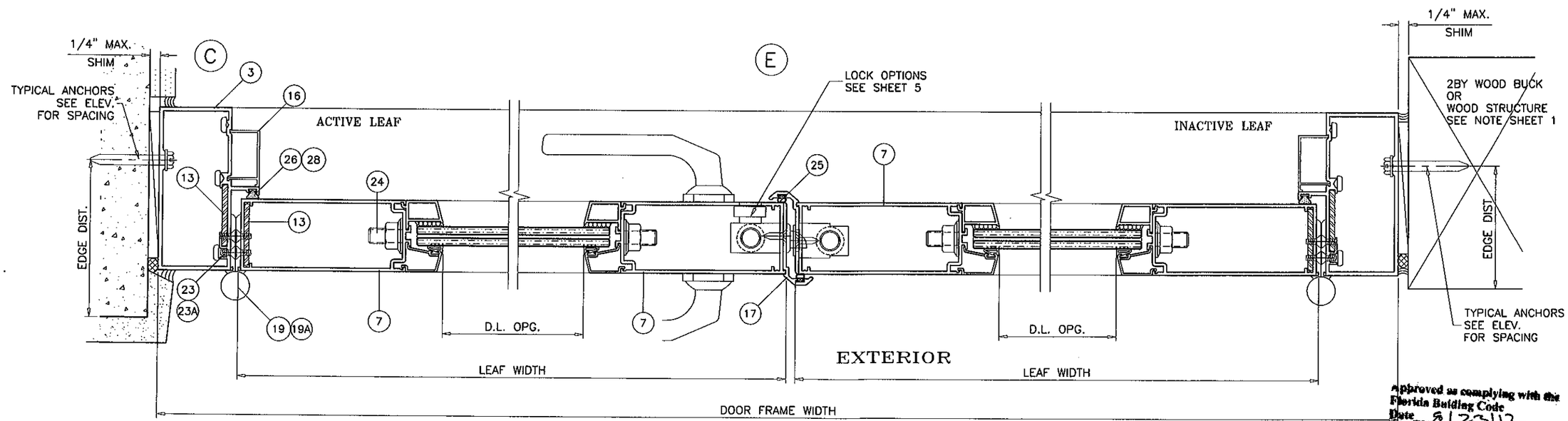

Approved as complying with the Florida Building Code
Date 8/23/12
NOA# 12-0529.19
Miami Dade Product Control
By Ishaq I. Handa

Engr: JAVAD AHMAD
CIVIL
FLA. PE # 70592
C.A.N. 3538

AUG 22 2012

DOOR DETAILS

AL-FAROOQ CORPORATION
ENGINEERS & PRODUCT DEVELOPMENT
1235 S.W. 87 AVE
MIAMI, FLORIDA 33174
TEL. (305) 264-8100 FAX. (305) 262-6978
COMP-ANL\W12-19CTC

SERIES 715 ALUM FRENCH DOOR W/ SIDELITES (L.M.I.)

CURV-A-TECH CORPORATION
930 W. 23rd STREET
HIALEAH, FL 33010
TEL. (305) 888-9969 FAX. (305) 888-9631

revisions:			
no	date	by	description
A	08.22.12		NO CHANGE THIS SHEET

date: 05-07-12
scale: 3/8" = 1"
dr. by: HAMID
chk. by:

drawing no.
W12-19

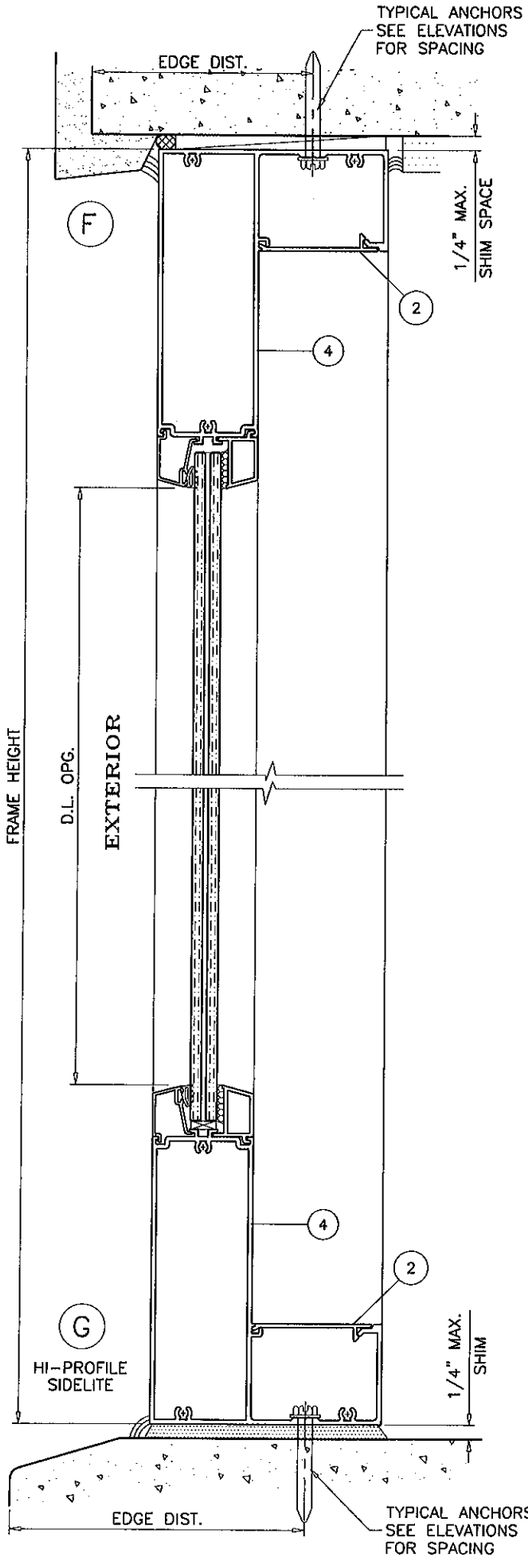

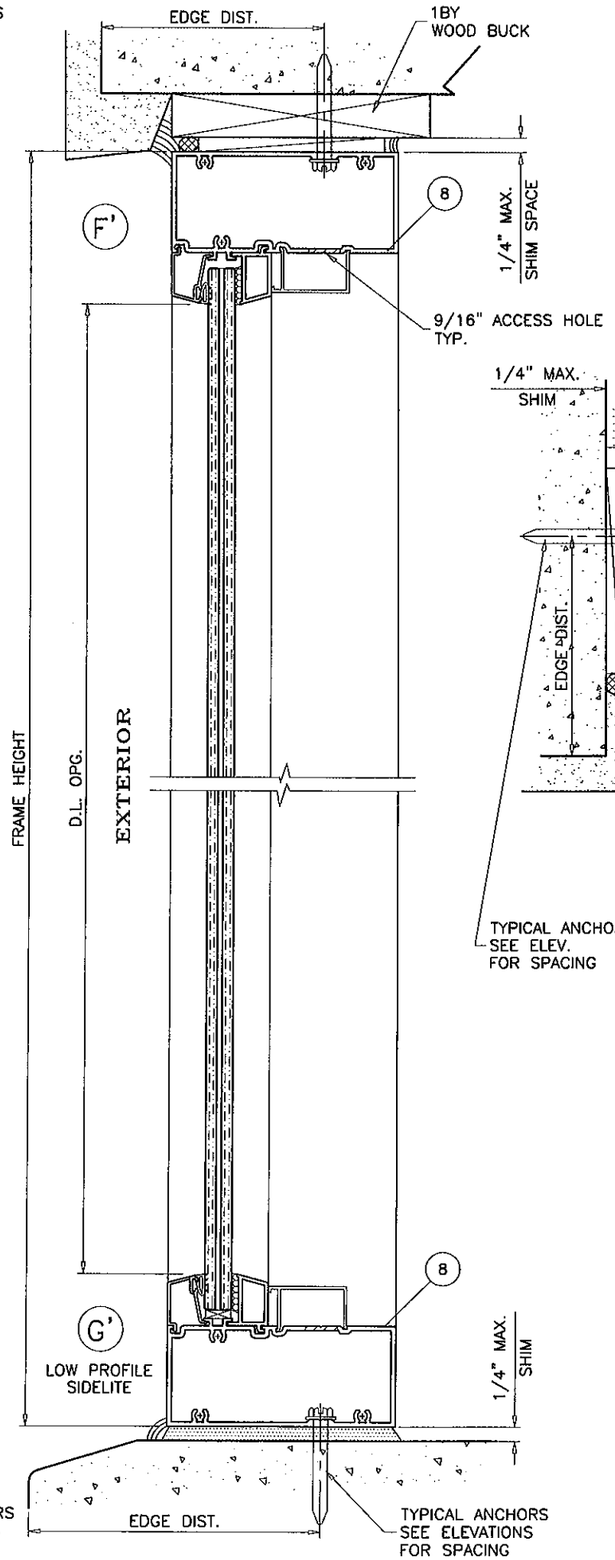

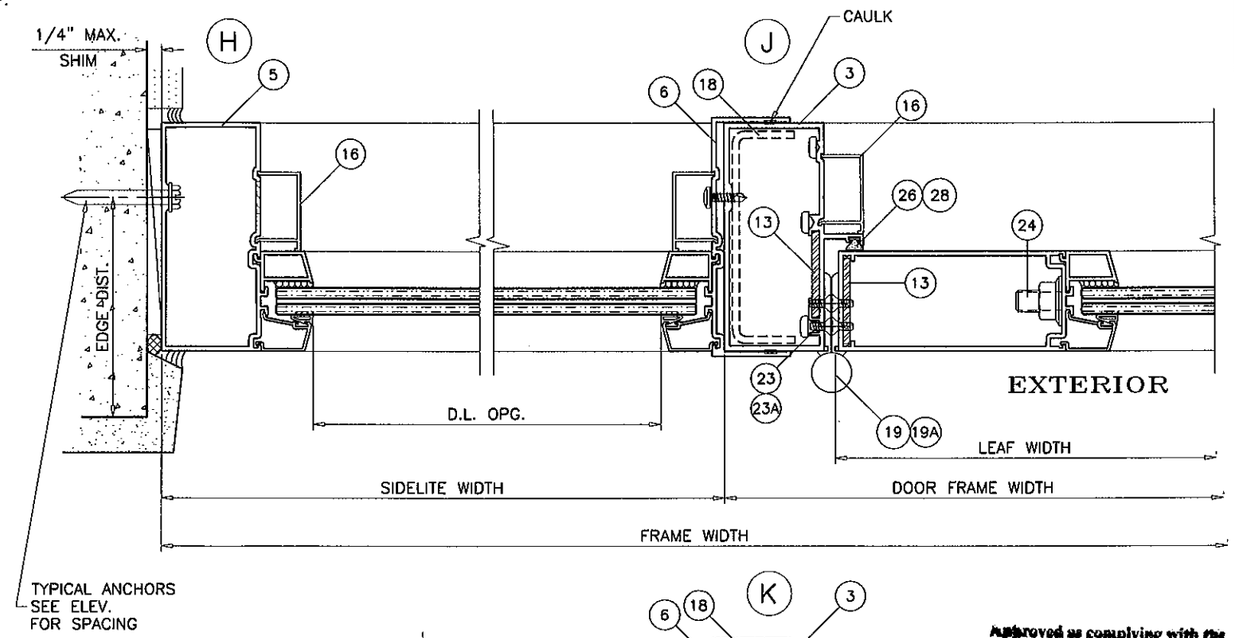

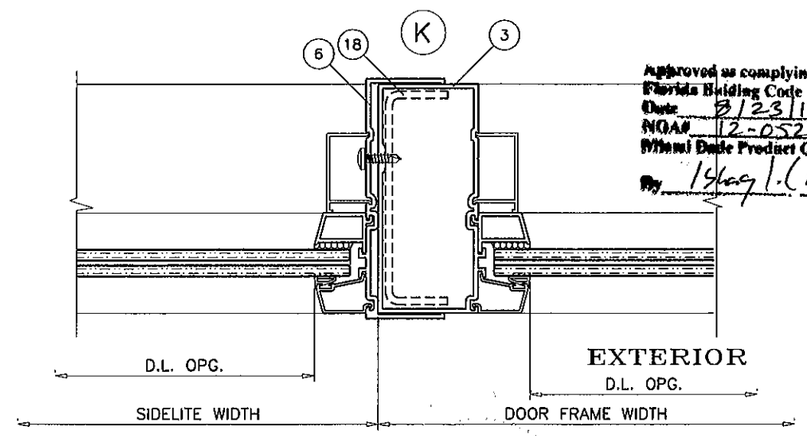

Approved as complying with the Florida Building Code
Date 8/23/12
NOA# 12-0529.19
Miami Dade Product Control
By

Engr: JAVAD AHMAD
CIVIL
FLA. PE # 70592
C.A.N. 3538

SIDELITE DETAILS

AUG 2 2 2012

AL-FAROOQ CORPORATION
ENGINEERS & PRODUCT DEVELOPMENT
1235 S.W. 87 AVE
MIAMI, FLORIDA 33174
TEL. (305) 264-8100 FAX. (305) 262-6978
COMP-ANL\W12-19CTC

SERIES 715 ALUM FRENCH DOOR W/ SIDELITES (L.M.I.)

CURV-A-TECH CORPORATION
930 W. 23rd STREET
HIALEAH, FL 33010
TEL. (305) 888-9631 FAX. (305) 888-9969

revisions:

no	date	by	description
A	08.22.12		REV. PER RER COMMENTS

date: 05-07-12
scale: 3/8" = 1"
dr. by: HAMID
chk. by:

drawing no.
W12-19

sheet 8 of 14

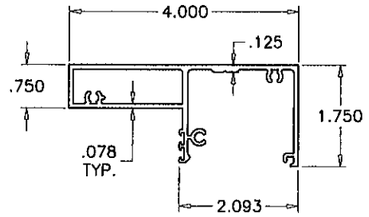

1 DOOR FRAME HEAD/SILL

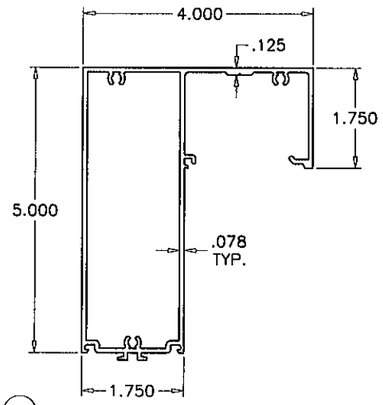

4 SIDELITE TOP & BOTTOM FRAME
HI-PROFILE

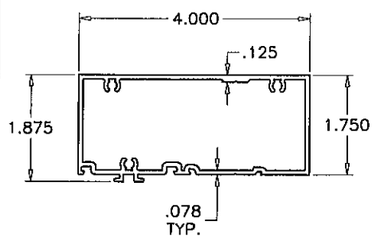

8 SIDELITE TOP & BOTTOM FRAME
LOW PROFILE

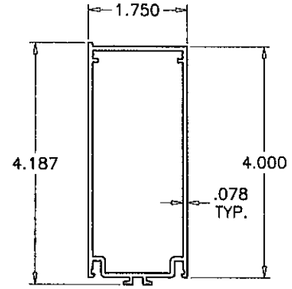

7 LEAF RAIL & STILE

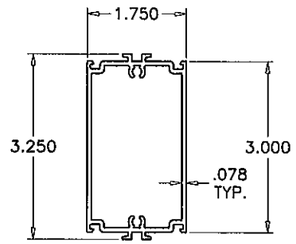

9 CHAIR RAIL

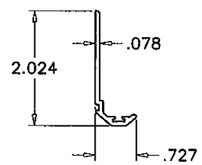

17 ASTRAGAL ADAPTER

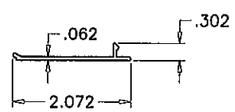

2 FRAME COVER

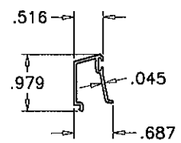

14 OUTER GLASS STOP
7/16" GLASS

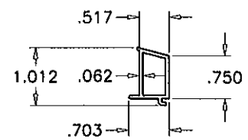

15 INNER GLASS STOP
7/16" GLASS

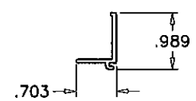

15A INNER GLASS STOP
INSUL GLASS

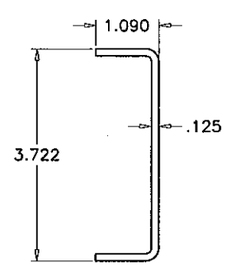

18 SIDELITE ALUM REINF.

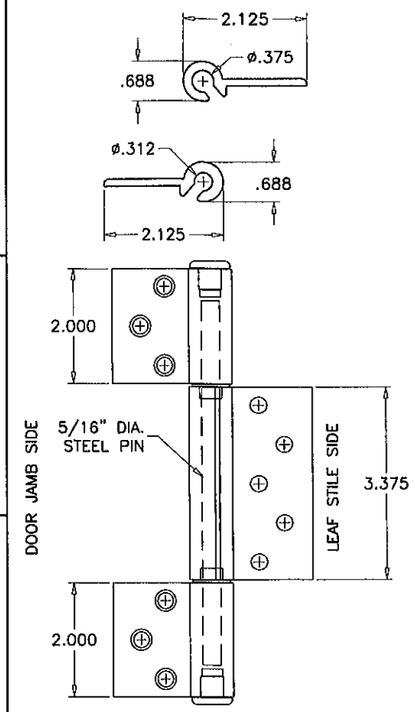

19 ALUMINUM HINGE

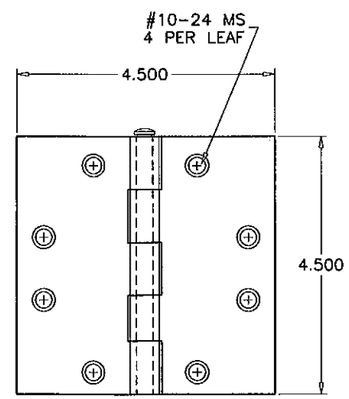

19A STEEL HINGE

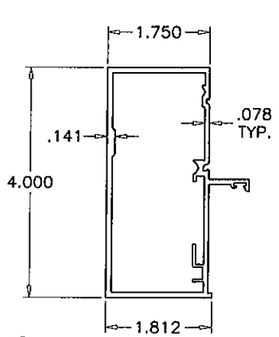

3 DOOR FRAME JAMB

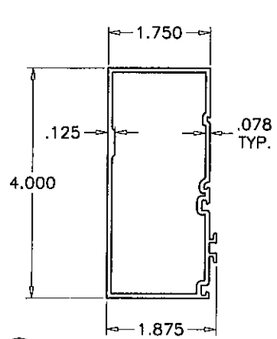

5 SIDELITE FRAME JAMB

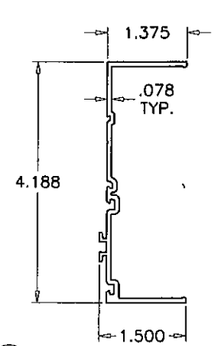

6 SIDELITE SLIP ON JAMB

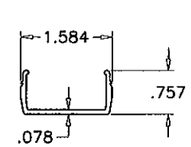

12 LEAF ALIGNMENT BRACKET

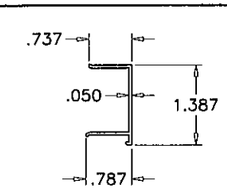

16 SNAP COVER

Approved as complying with the Florida Building Code
Date 8/23/12
NOA# 12-0529.19
Miami-Dade Product Control
By Ishaq I. Chande

Engr: JAVAD AHMAD
CIVIL
FLA. PE # 70592
C.A.N. 3538

AUG 23 2012

AL-FAROOQ CORPORATION
ENGINEERS & PRODUCT DEVELOPMENT
1235 S.W. 87 AVE
MIAMI, FLORIDA 33174
TEL. (305) 264-8100 FAX. (305) 262-6978

COMP-ANL\W12-19CTC

SERIES 715 ALUM FRENCH DOOR W/ SIDELITES (L.M.I.)

CURV-A-TECH CORPORATION
930 W. 23rd STREET
HIALEAH, FL 33010
TEL. (305) 888-9631 FAX. (305) 888-9969

revisions:

no	date	by	description
A	08.22.12		NO CHANGE THIS SHEET

date: 05-07-12
scale: 3/8" = 1"
dr. by: HAMID
chk. by:

drawing no.
W12-19

ITEM #	PART #	REQD.	DESCRIPTION	MATERIAL	MANF./SUPPLIER/REMARKS
1	C301	2/ DOOR	DOOR FRAME HEAD/SILL	6063-T6	–
2	C302	2/ DOOR	FRAME COVER	6063-T6	–
3	C303	2/ DOOR	DOOR FRAME JAMB	6063-T6	–
4	C305	2/ SIDELITE	SIDELITE TOP & BOTTOM FRAME	6063-T6	–
5	C306	2/ SIDELITE	SIDELITE FRAME JAMB	6063-T6	–
6	C307	AS REQD.	SIDELITE SLIP ON JAMB	6063-T6	–
7	C308	4/ LEAF	LEAF RAIL AND STILE	6063-T6	–
8	C315	2/ SIDELITE	SIDELITE TOP & BOTTOM FRAME-LOW PROFILE	6063-T6	–
9	C318	AS REQD.	CHAIR RAIL	6063-T6	–
12	C314	4/ LEAF	LEAF ALIGNMENT BRACKET	6063-T6	–
13	1/8" X 1-1/2"	2/ HINGE	LEAF & HINGE BACK-UP PLATE	6063-T5	FOR ST. STEEL HINGE ONLY
14	C311	4/ LEAF	OUTER GLASS STOP (7/16" GLASS)	6063-T6	–
15	C310	4/ LEAF	INNER GLASS STOP	6063-T6	–
15A	C313	4/ LEAF	INNER GLASS STOP (INSUL. GLASS)	6063-T6	–
16	C304	2/ DOOR	SNAP COVER	6063-T6	–
17	C309	1/ LEAF	ASTRAGAL ADAPTER	6063-T6	–
18	–	AS REQD.	SIDELITE REINF. CHANNEL	3003-H14	–
19	FD-101	3/ LEAF	HINGES	ALUMINUM	SULLIVAN & ASSOC.
19A	CH-108-BS	3/ LEAF	4-1/2" X 4" HINGES	ST. STEEL	SULLIVAN & ASSOC.
22	#10 X 3/4"	3/ CORNER	FRAME ASSEMBLY SCREWS	–	SMS
23	#10 X 1/2"	11/ HINGE	ALUM HINGE INSTALLATION FASTENERS	–	FH SMS
23A	1/4-20 X 1/2"	8/ HINGE	ST. STEEL HINGE INSTALLATION FASTENERS	ST. STEEL	FH SMS
24	–	AS REQD.	3/8" DIA. THREADED ROD	STEEL	AT TOP AND BOTTOM & CHAIR RAIL
25	E22318KN	AS REQD.	ASTRAGAL W'STRIPPING	–	ULTRAFAB
26	F24618KN	AS REQD.	BULB W'STRIPPING	SANTOPRENE	EPDM
27	C317	AS REQD.	GLAZING WEDGE	SANTOPRENE	CENTRAL PLASTICS
28	–	AS REQD.	BULB W'STRIPPING	VINYL	–

Approved as complying with the Florida Building Code
Date 9/23/12
NOA# 12-0529.19
Miami Dade Product Control
By Ishaq I. Chand

Engr: JAVAD AHMAD
CIVIL
FLA. PE # 70592
C.A.N. 3538

AUG 2 2 2012

AL-FAROOQ CORPORATION
ENGINEERS & PRODUCT DEVELOPMENT
1235 S.W. 87 AVE
MIAMI, FLORIDA 33174
TEL. (305) 264-8100 FAX. (305) 262-6978

COMP-ANL\W12-19CTC

SERIES 715 ALUM FRENCH DOOR W/ SIDELITES (L.M.I.)

CURV-A-TECH CORPORATION
930 W. 23rd STREET
HIALEAH, FL 33010
TEL. (305) 888-9631 FAX. (305) 888-9969

revisions:

no	date	by	description
A	08.22.12		REV. PER RER COMMENTS

date: 05-07-12
scale: 3/8" = 1"
dr. by: HAMID
chk. by:

drawing no.
W12-19

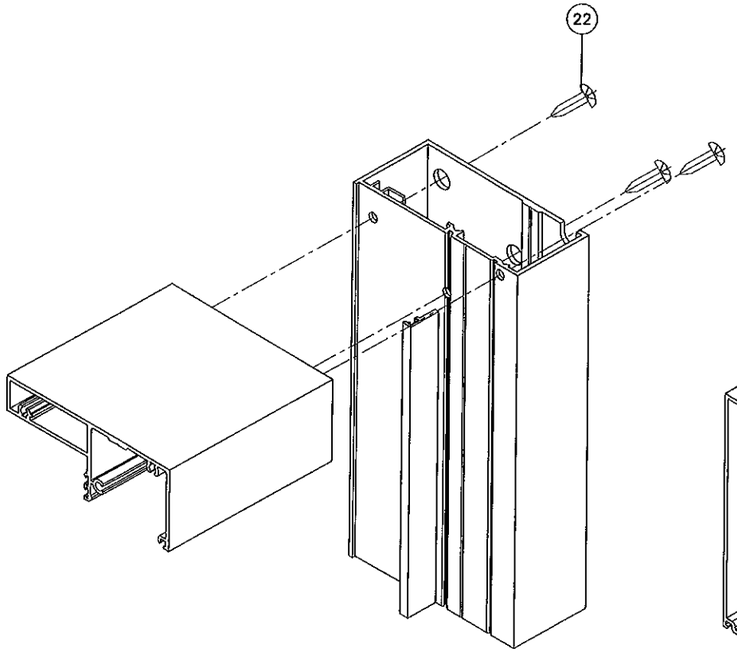

DOOR FRAME TOP & BOTTOM CORNER

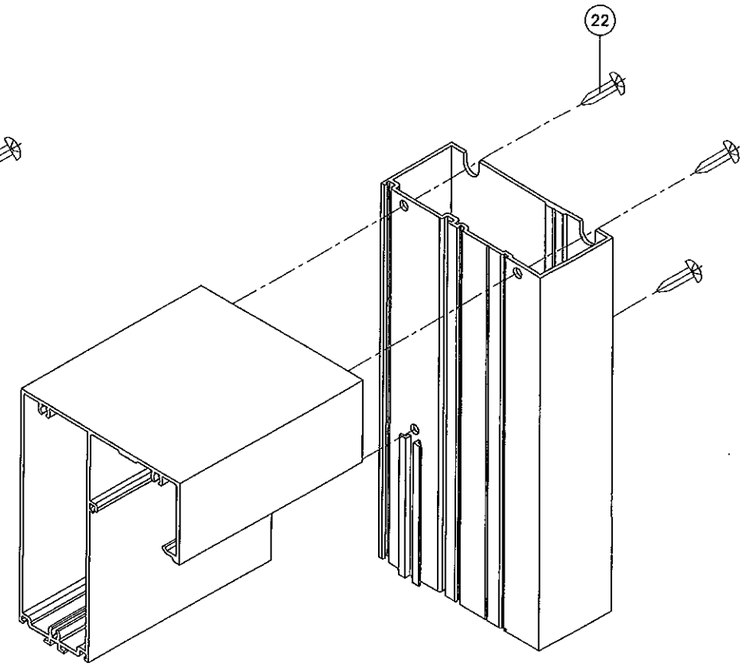

SIDELITE TOP & BOTTOM CORNER

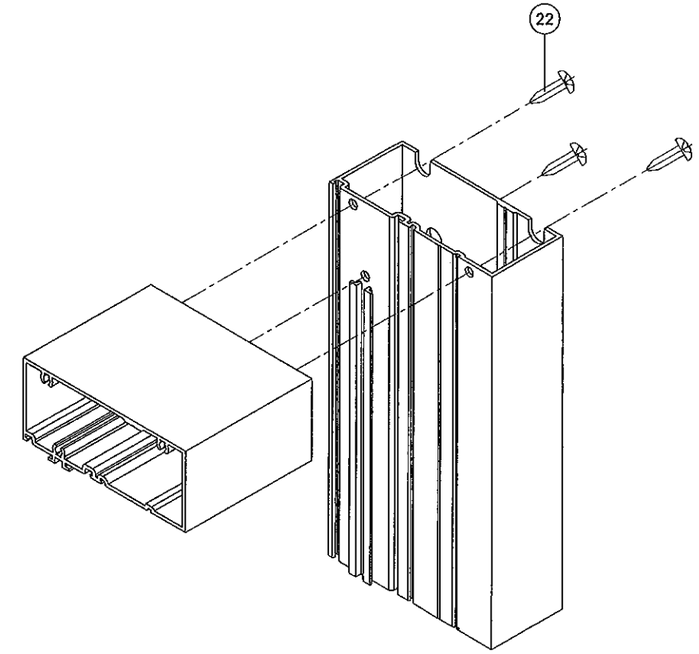

SIDELITE TOP & BOTTOM CORNER

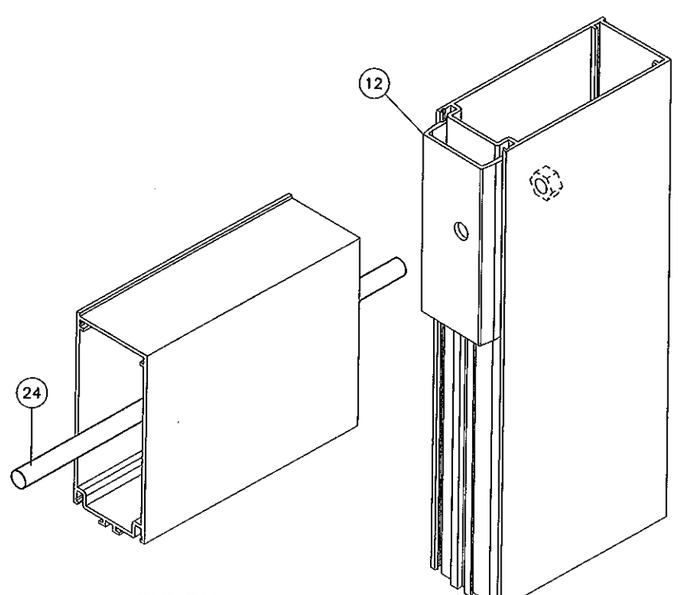

LEAF TOP & BOTTOM CORNER

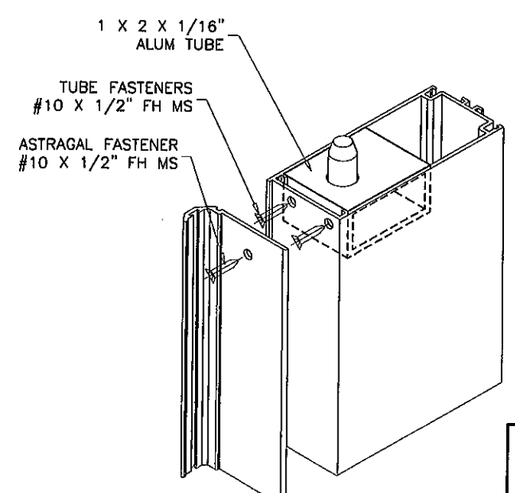

FLUSH BOLT GUIDE TOP & BOTTOM

Approved as complying with the Florida Building Code
Date 8/23/12
NOA# 12-0529.19
Miami Dade Product Control
By Ashley L. Chand

Engr: JAVAD AHMAD
CIVIL
FLA. PE # 70592
C.A.N. 3538

AUG 22 2012

AL-FAROOQ CORPORATION
ENGINEERS & PRODUCT DEVELOPMENT
1235 S.W. 87 AVE
MIAMI, FLORIDA 33174
TEL. (305) 264-8100 FAX. (305) 262-6978

COMP-ANL\W12-19CTC

SERIES 715 ALUM FRENCH DOOR W/ SIDELITES (L.M.I.)

CURV-A-TECH CORPORATION
930 W. 23rd STREET
HIALEAH, FL 33010
TEL. (305) 888-9631 FAX. (305) 888-9969

revisions:

no	date	by	description
A	08.22.12		REV. PER RER COMMENTS

date: 05-07-12
scale: 3/8" = 1"
dr. by: HAMID
chk. by:

drawing no.
W12-19

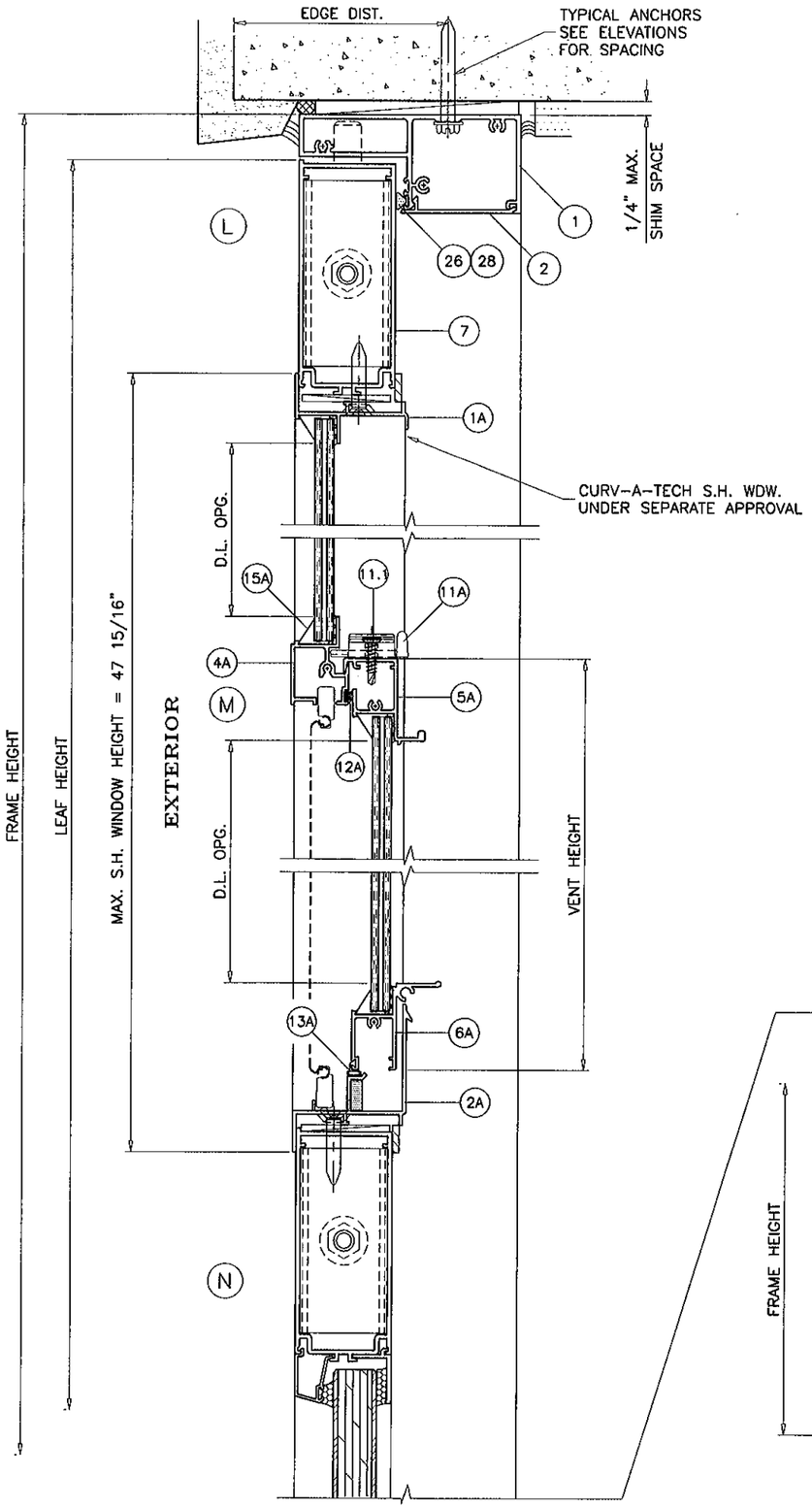

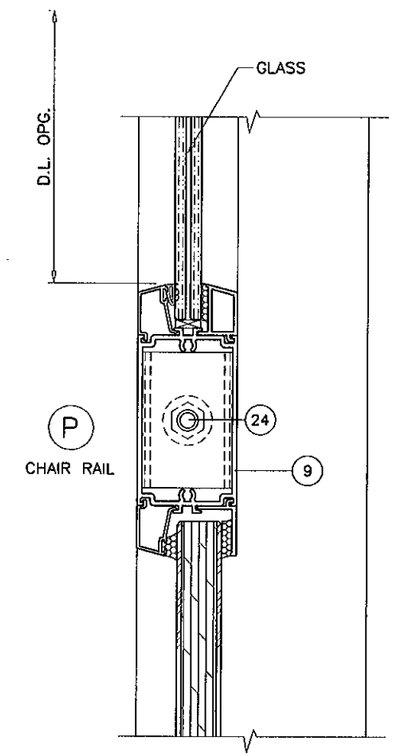

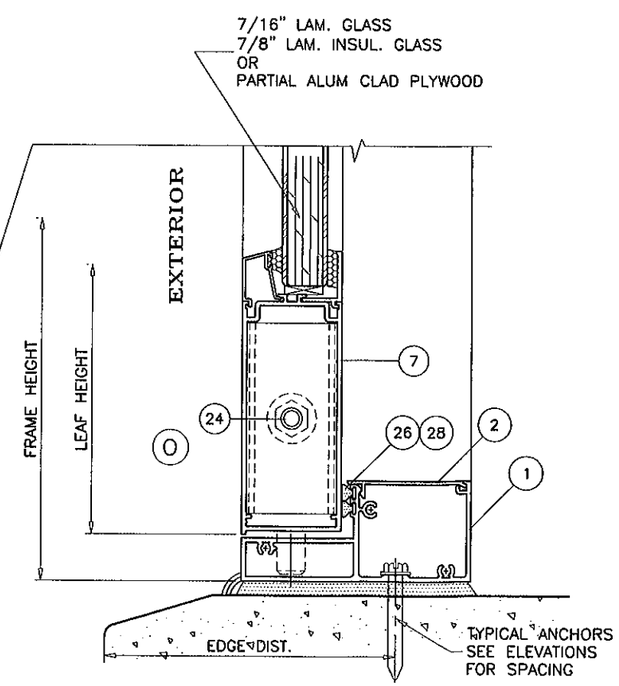

Approved as complying with the Florida Building Code
Date 8/23/12
NOA# 12-0529.19
Miami Dade Product Control
By [signature]

NOTE:
MAX. PARTIAL ALUM CLAD PLYWOOD PANEL NOT TO EXCEED
FOR SIDELITE 38-1/4" WIDTH X 35-3/4" HEIGHT
FOR DOOR 29-1/8" WIDTH X 35-1/4" HEIGHT

Engr. JAVAD AHMAD
CIVIL
FLA. PE # 70592
C.A.N. 3538
AUG 2 2 2012

AL-FAROOQ CORPORATION
ENGINEERS & PRODUCT DEVELOPMENT
1235 S.W. 87 AVE
MIAMI, FLORIDA 33174
TEL. (305) 264-8100 FAX. (305) 262-6978

COMP-ANL\W12-19CTC

SERIES 715 ALUM FRENCH DOOR W/ SIDELITES (L.M.I.)

CURV-A-TECH CORPORATION
930 W. 23rd STREET
HIALEAH, FL 33010
TEL. (305) 888-9631 FAX. (305) 888-9969

revisions:

no	date	by	description
A	08.22.12		REV. PER RER COMMENTS

date: 05-07-12
scale: 3/8" = 1"
dr. by: HAMID
chk. by:

drawing no.
W12-19

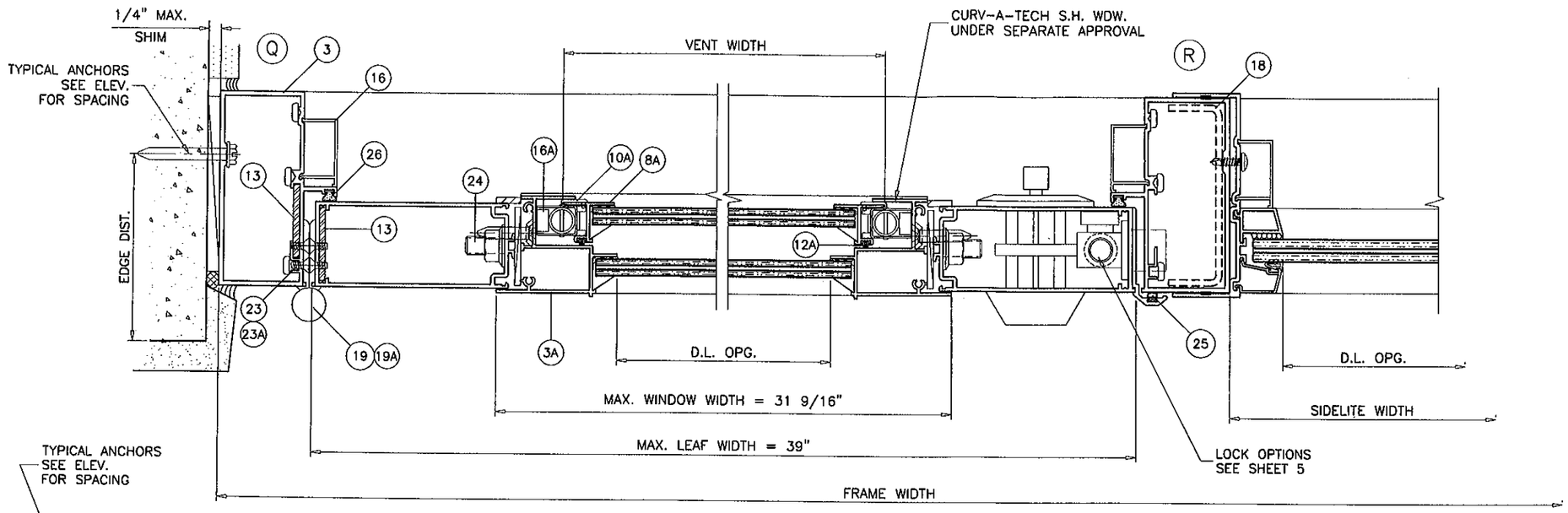

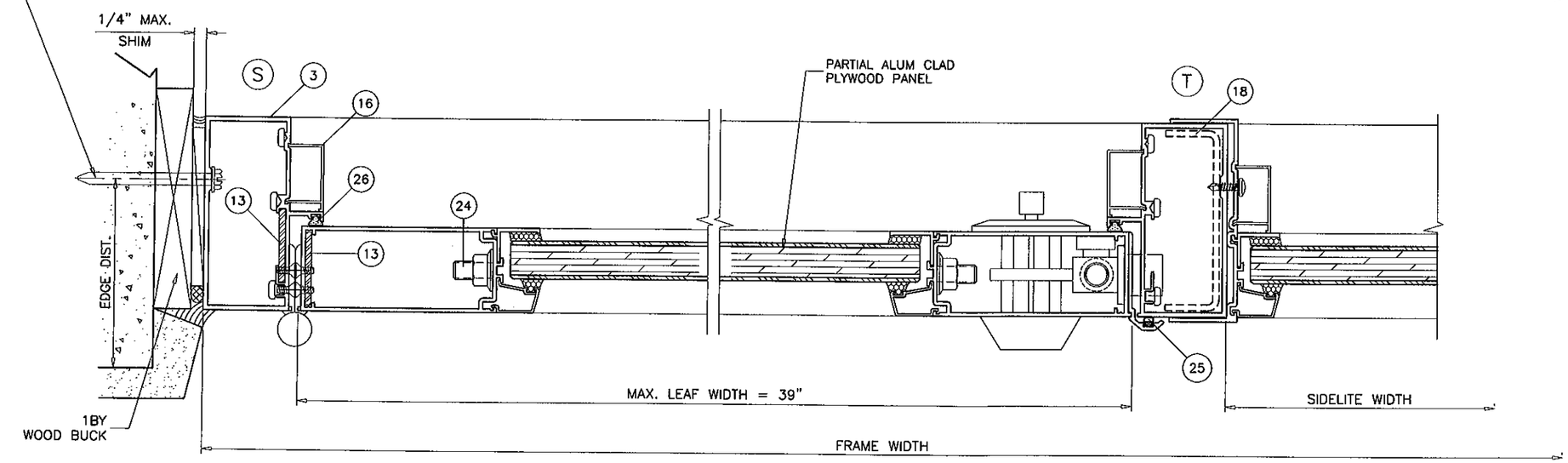

Approved as complying with the Florida Building Code
Date 8/23/12
NOA# 12-0529.14
Miami Dade Product Control
By Ishay L. Chast

Engr: JAVAD AHMAD
CIVIL
FLA. PE # 70692
C.A.N. 3538

AUG 22 2012

AL-FAROOQ CORPORATION
ENGINEERS & PRODUCT DEVELOPMENT
1235 S.W. 87 AVE
MIAMI, FLORIDA 33174
TEL. (305) 264-8100 FAX. (305) 262-6978

COMP-ANL\W12-19CTC

SERIES 715 ALUM FRENCH DOOR W/ SIDELITES (L.M.I.)

CURV-A-TECH CORPORATION
930 W. 23rd STREET
HIALEAH, FL 33010
TEL. (305) 888-9631 FAX. (305) 888-9969

revisions:

no	date	by	description
A	08.22.12		REV. PER RER COMMENTS

date: 05-07-12
scale: 3/8" = 1"
dr. by: HAMID
chk. by:

drawing no.
W12-19

sheet 13 of 14

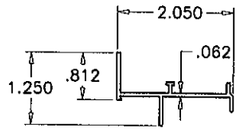

FRAME HEAD
C-3001
6063-T5
(1A)

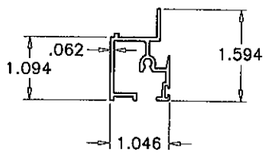

FIXED MEETING RAIL
C-3004
6063-T6
(4A)

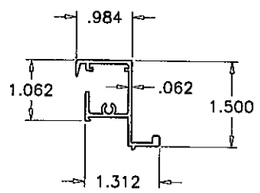

SASH TOP RAIL
C-3005
6063-T6
(5A)

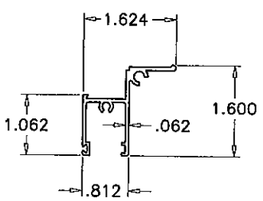

SASH BOTTOM RAIL
C-3006
6063-T6
(6A)

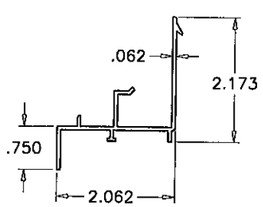

SILL
C-3002
6063-T5
(2A)

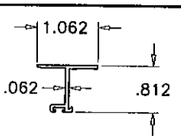

SASH SIDE RAIL
C-3007
6063-T5
(8A)

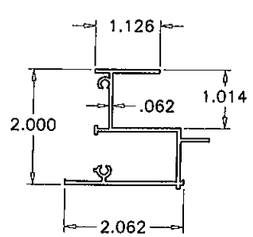

FRAME JAMB
C-3003
6063-T5
(3A)

ITEM #	PART #	QUANTITY	DESCRIPTION	MATERIAL	MANUF./SUPPLIER/REMARKS
1A	C-3001	1	FRAME HEAD	6063-T6	-
2A	C-3002	1	FRAME SILL	6063-T6	-
3A	C-3003	2	FRAME JAMB	6063-T5	-
4A	C-3004	1	FIXED MEETING RAIL	6063-T6	-
5A	C-3005	1	SASH TOP RAIL	6063-T6	-
6A	C-3006	1	SASH BOTTOM RAIL	6063-T6	-
8A	C-3007	2	SASH SIDE RAIL	6063-T5	-
9A	#8 X 1"	AS REQD.	ASSEMBLY SCREWS	-	P.H. SMS
10A	C-3085	4/ VENT	FACE GUIDES 3" FROM ENDS	NYLON	-
11A	C-3009	2/ VENT	SASH LATCH AT 6-1/4" FROM ENDS	6063-T6	WITH S.S. LEAF SPRING
11.1	#8 X 3/4"	2/ LATCH	LATCH INSTALLATION SCREWS	-	F.H. SMS
12A	3017-G	AS REQD.	FIN SEAL PILE	-	ULTRAFAB
13A	C-3011	AS REQD.	BULB WEATHER STRIP, DUROMETER ±70 SHORE A	VINYL	CENTRAL PLASTICS
15A	-	AS REQD.	ALUM GLAZING BEAD	ALUMINUM	ROLL FORMED
16A	-	2	BLOCK & TACKLE BALANCE	-	5/8" BOX, BLANCE SYSTEMS OR EQUIV.

CURV-A-TECH S.H. WDW. SERIES 925 UNDER SEPARATE APPROVAL

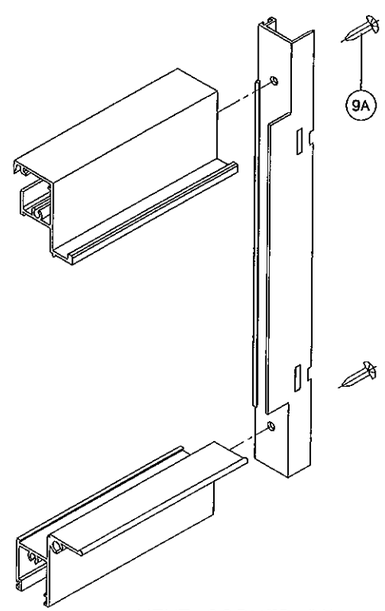

VENT CORNER DETAIL

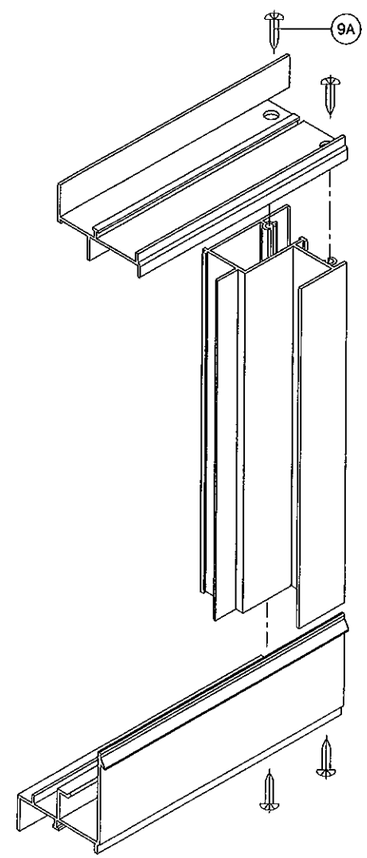

FRAME CORNER DETAIL

Approved as complying with the Florida Building Code
Date AUG 23, 2012
NOA# 12-0529.10
Miami Dade Product Control
By Ishaq I. Chanda

Engr: JAVAD AHMAD
CIVIL
FLA. PE # 70592
C.A.N. 3538
AUG 22 2012

AL-FAROOQ CORPORATION
ENGINEERS & PRODUCT DEVELOPMENT
1235 S.W. 87 AVE
MIAMI, FLORIDA 33174
TEL. (305) 264-8100 FAX. (305) 262-6978
COMP-ANL\W12-19CTC

SERIES 715 ALUM FRENCH DOOR W/ SIDELITES (L.M.I.)

CURV-A-TECH CORPORATION
930 W. 23rd STREET
HIALEAH, FL 33010
TEL. (305) 888-9631 FAX. (305) 888-9969

revisions:

no	date	by	description
A	08.22.12	RER	REV. PER COMMENTS

date: 05-07-12
scale: 3/8" = 1"
dr. by: HAMID
chk. by:

drawing no.
W12-19

sheet 14 of 14