MIAMI-DADE COUNTY
DEPARTMENT OF PERMITTING, ENVIRONMENT, AND REGULATORY AFFAIRS (PERA)
BOARD AND CODE ADMINISTRATION DIVISION

MIAMI–DADE COUNTY, FLORIDA
PRODUCT CONTROL SECTION
11805 S.W. 26th Street, Room 208
Miami, Florida 33175–2474
T (786) 315–2590 F (786) 315–2599
http://www.miamidade.gov/economy/

NOTICE OF ACCEPTANCE (NOA)

Vintage Ironworks, LLC
987 Josiane Court, Suite 1062,
Altamonte Springs, FL 32701

SCOPE:

This NOA is being issued under the applicable rules and regulations governing the use of construction materials. The documentation submitted has been reviewed and accepted by Miami–Dade County PERA–Product Control Section to be used in Miami–Dade County and other areas where allowed by the Authority Having Jurisdiction (AHJ).

This NOA shall not be valid after the expiration date stated below. The Miami–Dade County Product Control Section (In Miami–Dade County) and/or the AHJ (in areas other than Miami–Dade County) reserve the right to have this product or material tested for quality assurance purposes. If this product or material fails to perform in the accepted manner, the manufacturer will incur the expense of such testing and the AHJ may immediately revoke, modify, or suspend the use of such product or material within their jurisdiction. PERA reserves the right to revoke this acceptance, if it is determined by Miami–Dade County Product Control Section that this product or material fails to meet the requirements of the applicable building code.

This product is approved as described herein, and has been designed to comply with the Florida Building Code, including the High Velocity Hurricane Zone.

DESCRIPTION:

Series 9'–10" Inswing Glazed Steel French Doors with/ without Sidelights and/ or Transom – L.M.I.

APPROVAL DOCUMENT: Drawing No. **VIN0002**, titled series "Steel Inswing Doors w/ & w/o Sidelights & Transoms", sheets 1 through 14 of 14, dated 07/22/08 with revision "**E**" dated 05/09/12, prepared by PTC, LLC, signed and sealed by Robert J. Amoruso, P. E., bearing the Miami–Dade County Product Control Section revision stamp with the Notice of Acceptance number and expiration date by the Miami–Dade County Product Control Section.

MISSILE IMPACT RATING: Large and Small Missile Impact Resistant

LABELING: Each unit shall bear a permanent label with the manufacturer's name or logo, city, state, model/ series, and following statement: "Miami–Dade County Product Control Approved", unless otherwise noted herein.

RENEWAL of this NOA shall be considered after a renewal application has been filed and there has been no change in the applicable building code negatively affecting the performance of this product.

TERMINATION of this NOA will occur after the expiration date or if there has been a revision or change in the materials, use, and/ or manufacture of the product or process. Misuse of this NOA as an endorsement of any product, for sales, advertising or any other purposes shall automatically terminate this NOA. Failure to comply with any section of this NOA shall be cause for termination and removal of NOA.

ADVERTISEMENT: The NOA number preceded by the words Miami–Dade County, Florida, and followed by the expiration date may be displayed in advertising literature. If any portion of the NOA is displayed, then it shall be done in its entirety.

INSPECTION: A copy of this entire NOA shall be provided to the user by the manufacturer or its distributors and shall be available for inspection at the job site at the request of the Building Official.

This NOA **revises NOA No. 08–0807.22** and consists of this page 1 and evidence pages E–1 and E–2, as well as approval document mentioned above.

The submitted documentation was reviewed by **Jaime D. Gascon, P. E.**

MIAMI-DADE COUNTY APPROVED

J. Gascon
7/24/12

NOA No. 12–0604.03
Expiration Date: September 09, 2014
Approval Date: August 02, 2012

NOTICE OF ACCEPTANCE: EVIDENCE SUBMITTED

A. DRAWINGS

1. Manufacturer's die drawings and sections.
   (Submitted under previous NOA No. 08–0807.22)
2. Drawing No. **VIN0002**, titled series "Steel Inswing Doors w/ & w/o Sidelights & Transoms", sheets 1 through 14 of 14, dated 07/22/08 with revision "**E**" dated 05/09/12, prepared by PTC, LLC, signed and sealed by Robert J. Amoruso, P. E.

B. TESTS

1. Test reports on: 1) Air Infiltration Test, per FBC, TAS 202–94
   2) Uniform Static Air Pressure Test, Loading per PA 202–94
   3) Water Resistance Test, per FBC, TAS 202–94
   4) Large Missile Impact Test per FBC, TAS 201–94
   5) Cyclic Wind Pressure Loading per SFBC, PA 203–94
   6) Forced Entry Test, per FBC 2411 3.2.1 and TAS 202–94

   along with marked–up drawings and installation diagram of Steel Outswing Doors w/ & w/o Sidelights & Transoms, prepared by National Certified Testing Laboratories, Inc., Test Report No. **NCTL 210–3485–1**, dated 12/04/07, signed and sealed by Gerard J. Ferrara, P. E.
   (Submitted under previous NOA No. 08–0807.22)

C. CALCULATIONS

1. Anchor verification calculations and structural analysis, complying with FBC–2007, prepared by PTC, LLC, dated 07/15/08, signed and sealed by Paul E. Winter, P. E.
   (Submitted under previous NOA No. 08–0807.22)
2. **Glazing complies with ASTM E 1300–02/98**

D. QUALITY ASSURANCE

1. Miami–Dade Department of Permitting, Environment, and Regulatory Affairs (PERA).

E. MATERIAL CERTIFICATIONS

1. Notice of Acceptance No. **08–0206.01** issued to Solutia Inc. for their "**Saflex HP a polyvinyl butryal interlayer for lamination of glass**" dated 04/17/08, expiring on 04/17/13.

F. STATEMENTS

1. Statement letter of no financial interest, conformance and complying with **FBC–2010**, issued by PTC, LLC, dated 05/10/12, prepared, signed and sealed by Robert J. Amoruso, P. E.

Jaime D. Gascon, P.E.
Product Control Section Supervisor
NOA No. 12–0604.03
Expiration Date: September 09, 2014
Approval Date: August 02, 2012

NOTICE OF ACCEPTANCE: EVIDENCE SUBMITTED

F. STATEMENTS (CONTINUED)

2. Laboratory compliance letter for Test Report No. **NCTL 210–3485–1**, dated 10/31/08, issued by National Certified Test Laboratory, Inc., signed and sealed by Gerard J. Ferrara, P. E.
(Submitted under previous NOA No. 08–0807.22)

G. OTHERS

1. Notice of Acceptance No. **08–0807.22**, issued to Vintage Ironworks, LLC for their Series **"9'–10" Inswing Glazed Steel French Doors with and/ or without Sidelights and/ or Transom – L.M.I.**", approved on 09/09/09 and expiring on 09/09/14.

Jaime D. Gascon, P. E.
Product Control Section Supervisor
NOA No. 12–0604.03
Expiration Date: September 09, 2014
Approval Date: August 02, 2012

VINTAGE IRONWORKS

STEEL INSWING DOORS W/ & W/O SIDELITES & TRANSOMS

INSTALLATION ANCHORAGE DETAILS

GENERAL NOTES:

1. THE PRODUCT ANCHORAGE SHOWN HEREIN IS DESIGNED TO COMPLY WITH THE 2007 AND 2010 FLORIDA BUILDING CODE (FBC), INCLUDING HIGH VELOCITY HURRICANE ZONE (HVHZ) REQUIREMENTS, AND AT THE DESIGN PRESSURES STATED HEREIN. E
2. THE PRODUCT DETAILS CONTAINED HEREIN ARE BASED UPON SIGNED AND SEALED TEST REPORT #NCTL-210-3485-1 DATED 12-04-07, AND ASSOCIATED LABORATORY STAMPED DRAWINGS.
3. THE PRODUCT HAS BEEN EVALUATED FOR CONFORMANCE TO THE STANDARDS LISTED IN THE FLORIDA BUILDING CODE (FBC) AND IS IN COMPLIANCE WITH SAID STANDARDS, INCLUDING HIGH VELOCITY HURRICANE ZONE (HVHZ) REQUIREMENTS.
4. ADEQUACY OF THE EXISTING STRUCTURAL CONCRETE / MASONRY AND 2X FRAMING AS A MAIN WIND FORCE RESISTING SYSTEM CAPABLE OF WITHSTANDING AND TRANSFERRING APPLIED PRODUCT LOADS TO THE FOUNDATION IS THE RESPONSIBILITY OF THE ENGINEER OR ARCHITECT OF RECORD.
5. 1X AND 2X BUCKS (WHEN USED) SHALL BE DESIGNED AND ANCHORED TO PROPERLY TRANSFER ALL LOADS TO THE STRUCTURE. BUCK DESIGN AND INSTALLATION IS THE RESPONSIBILITY OF THE ENGINEER OR ARCHITECT OF RECORD.
6. THE INSTALLATION DETAILS DESCRIBED HEREIN ARE GENERIC AND MAY NOT REFLECT ACTUAL CONDITIONS FOR A SPECIFIC SITE. IF SITE CONDITIONS CAUSE INSTALLATION TO DEVIATE FROM THE REQUIREMENTS DETAILED HEREIN, SITE SPECIFIC DOCUMENTS SHALL BE PREPARED FOR USE WITH THIS DOCUMENT.
7. IN HVHZ AREAS, USE OF AN APPROVED IMPACT PROTECTIVE SYSTEM COMPLYING WITH THE HVHZ REQUIREMENTS OF THE FBC IS NOT REQUIRED FOR THE PRODUCT(S) HEREIN.
8. DOOR FRAME AND PANEL MATERIAL: 14 GA. STEEL
9. GLASS MEETS THE REQUIREMENTS OF ASTM E1300-04e1. SEE SHEET 7 FOR GLAZING DETAILS. E
10. DESIGNATIONS "X" AND "O" STAND FOR THE FOLLOWING:
    X: OPERABLE PANEL
    O: FIXED PANEL
11. A 1/3 INCREASE IN ALLOWABLE STRESS FOR WIND LOADS WAS NOT USED IN THE DESIGN OF THE PRODUCT(S) SHOWN HEREIN, EXCEPT IN WOOD.

INSTALLATION NOTES:

1. ONE (1) INSTALLATION ANCHOR IS REQUIRED AT EACH ANCHOR LOCATION SHOWN.
2. THE NUMBER OF INSTALLATION ANCHORS DEPICTED IS THE MINIMUM NUMBER OF ANCHORS TO BE USED FOR PRODUCT INSTALLATION.
3. AT EACH INSTALLATION ANCHOR, SHIM GAPS THAT ARE EQUAL TO OR GREATER THAN 1/16". MAXIMUM ALLOWABLE SHIM SIZE IS 1/4".
4. FOR INSTALLATION INTO WOOD FRAMING, USE #14 WOOD SCREWS OF SUFFICIENT LENGTH TO ACHIEVE 1 1/2 INCH MINIMUM EMBEDMENT.
5. FOR INSTALLATION THROUGH 1X BUCK TO CONCRETE / MASONRY, OR DIRECTLY INTO CONCRETE / MASONRY, USE 5/16 INCH ITW TAPCONS OF SUFFICIENT LENGTH TO ACHIEVE 1 3/4 INCH MINIMUM EMBEDMENT.
6. MINIMUM EMBEDMENT AND EDGE DISTANCE EXCLUDE WALL FINISHES (INCLUDING BUT NOT LIMITED TO STUCCO, FOAM, BRICK VENEER, AND SIDING).
7. INSTALLATION ANCHORS AND ASSOCIATED HARDWARE MUST BE MADE OF CORROSION RESISTANT MATERIAL OR HAVE A CORROSION RESISTANT COATING.
8. FOR CONCRETE BLOCK, DO NOT INSTALL INSTALLATION ANCHORS INTO MORTAR JOINTS. EDGE DISTANCE IS MEASURED FROM FREE EDGE OF BLOCK OR EDGE OF MORTAR JOINT INTO FACE SHELL OF BLOCK.
9. INSTALLATION ANCHORS SHALL BE INSTALLED IN ACCORDANCE WITH ANCHOR MANUFACTURER'S INSTALLATION INSTRUCTIONS, AND ANCHORS SHALL NOT BE USED IN SUBSTRATES WITH STRENGTHS LESS THAN THE MINIMUM STRENGTH SPECIFIED BY THE ANCHOR MANUFACTURER.
10. INSTALLATION ANCHOR CAPACITIES FOR PRODUCTS HEREIN ARE BASED ON SUBSTRATE MATERIALS WITH THE FOLLOWING PROPERTIES:
    A. WOOD - PT SOUTHERN YELLOW PINE - MINIMUM SPECIFIC GRAVITY OF 0.55.
    B. CONCRETE - MINIMUM COMPRESSIVE STRENGTH OF 2899 PSI AND COMPLIES WITH ACI 301. E
    C. MASONRY - STRENGTH CONFORMANCE TO ASTM C-90. E
11. THE STRUCTURAL PERFORMANCE TEST REPORT INDICATES THAT HINGE FRAME SCREWS WERE NOT REPLACED WITH ADDITIONAL INSTALLATION ANCHORS A SCREWS DURING PRODUCT TESTING. HINGE INSTALLATION, USING TESTED HINGE SCREWS, IS QUALIFIED BY SATISFACTORY TEST PERFORMANCE.
12. ALUMINUM IN CONTACT WITH WOOD OR OTHER ABSORBING MATERIALS WHICH MAY BECOME REPEATEDLY WET SHALL BE PAINTED WITH TWO COATS C OF ALUMINUM METAL-AND-MASONRY PAINT OR A COAT OF HEAVY-BODIED BITUMINOUS PAINT, OR THE WOOD OR OTHER ABSORBING MATERIAL SHALL BE PAINTED WITH TWO COATS OF ALUMINUM HOUSE PAINT AND THE JOINTS SEALED WITH A GOOD QUALITY CAULKING COMPOUND. WHERE ALUMINUM IS IN CONTACT WITH TREATED WOOD, WOOD SHALL BE TREATED WITH PENTACHLOROPHENOL, 5 PERCENT MINIMUM CONCENTRATION, CREOSOTE, OR ZINC NAPHTHANATE, FOLLOWING THE PROTECTIVE MEASURES OUTLINED ABOVE.
13. ALUMINUM IN CONTACT WITH STEEL SHALL BE PROTECTED AS FOLLOWS:
    C A. PAINTING DISSIMALR METALS WITH ZINC-CHROMATE PRIMER AND 2 COATS ALUM METAL-AND -CONCRETE PAINT, EXCLUDING LEAD PIGMENTATION.
    B. PAINTING DISSIMILAR METALS WITH HEAVY-BODIED BITUMINOUS PAINT.
    C. APPLYING A NONABSORPTIVE TAPE OR GASKET
    D. HOT-DIP GALVANIZING OR ZINK-PLATING STEEL MEMBERS AFTER FABRICATION

D E TABLE OF CONTENTS

SHEET	REV.	SHEET DESCRIPTION
1	E	GENERAL NOTES, INSTALLATION NOTES & D.P. CHART
2	D	ELEVATION & ANCHOR LAYOUT
3	D	ELEVATION & ANCHOR LAYOUT
4	D	ELEVATION & ANCHOR LAYOUT
5	D	VERTICAL SECTIONS
6	D	VERTICAL AND HORIZONTAL SECTIONS
7	D	HORIZONTAL SECTIONS AND GLAZING DETAILS
8	D	HORIZONTAL SECTIONS
9	D	VERTICAL SECTIONS
10	D	VERTICAL AND HORIZONTAL SECTIONS
11	D	HORIZONTAL SECTIONS
12	A	QUALIFIED CONFIGURATIONS
13	D	COMPONENTS AND BILL OF MATERIALS
14	D	WELDING SCHEDULE AND DETAILS

DESIGN PRESSURE RATING (PSF)		IMPACT RATING
WHERE WATER INFILTRATION REQUIREMENT IS NEEDED	WHERE WATER INFILTRATION REQUIREMENT IS NOT NEEDED	LARGE MISSLE IMPACT
±16.67	±80.0	

PROJECT# 412-0304

REV/	DESCRIPTION	DATE	BY
E	UPDATE TO 2010 FBC	05/09/12	JBH
D	PER MIAMI-DADE COMMENTS 7/01/09	07/15/09	SMC
C	PER MIAMI-DADE COMMENTS 5/12/09	06/24/09	SMC

VINTAGE IRONWORKS
987 JOSIANE COURT, SUITE 1064
ALTAMONTE SPRINGS, FLORIDA 32701

TITLE: STEEL INSWING DOORS W/ & W/O SIDELITES & TRANSOM
GENERAL NOTES, INSTALLATION NOTES & D.P. CHART

DRAWN BY: CB | DATE: 07/22/08
SCALE: N.T.S. | DRAWING NO: VIN0002
REV: E | SHEET: 1 OF 14

PREPARED BY:
PTC Product Design Group, LLC
P.O. Box 520775
Longwood, Florida 32752
Phone 321.690.1788
Fax 321.690.1789
Email: info@ptc-corp.com

Robert J. Amoruso P.E.
FL P.E. No. 49752

FBPE Certificate of Authorization NO. 25935

PRODUCT REVISED
as complying with the Florida
Building Code
Acceptance No 12-0604.03
Expiration Date 04/06/2017
By
Miami Dade Product Control

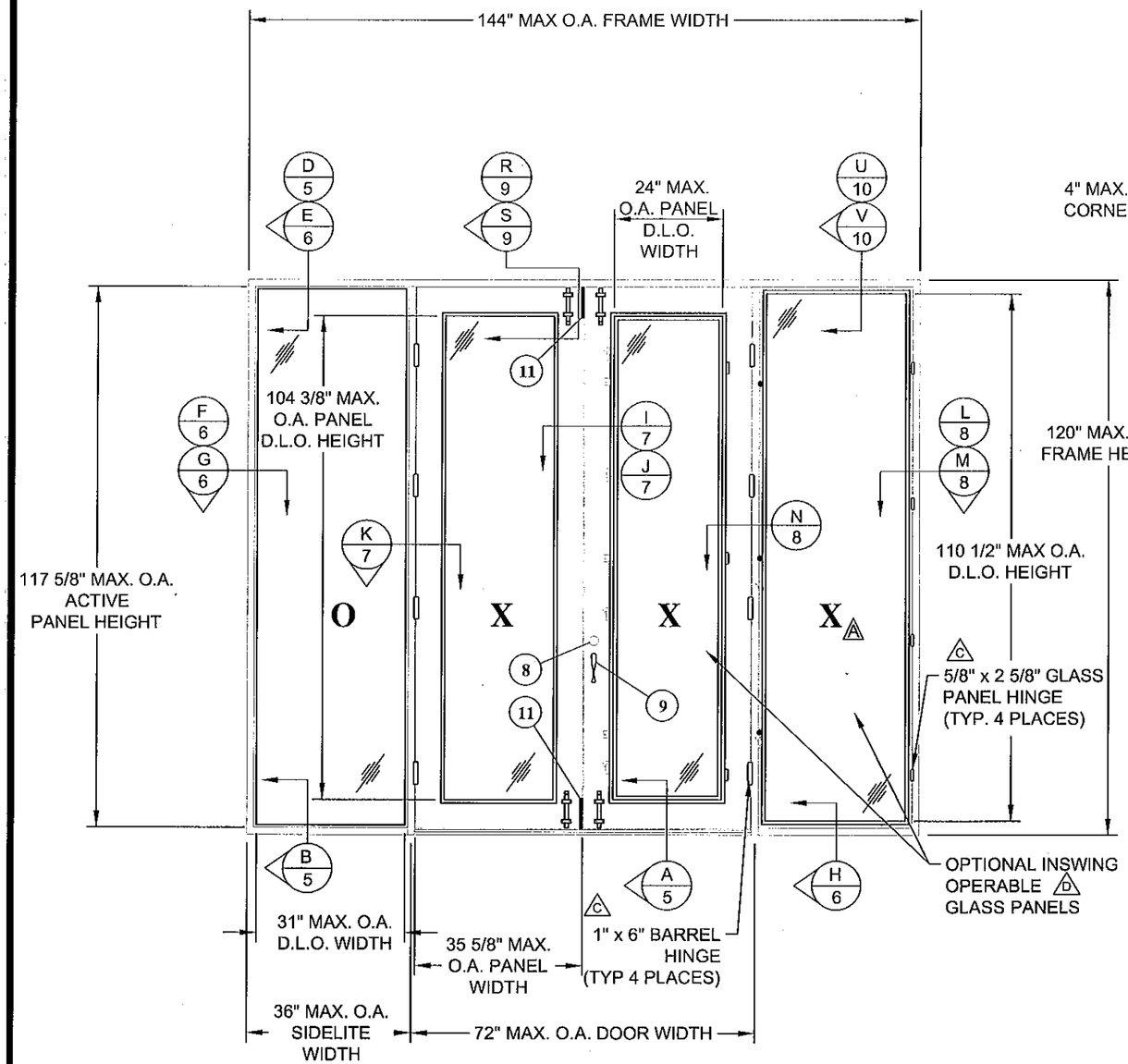

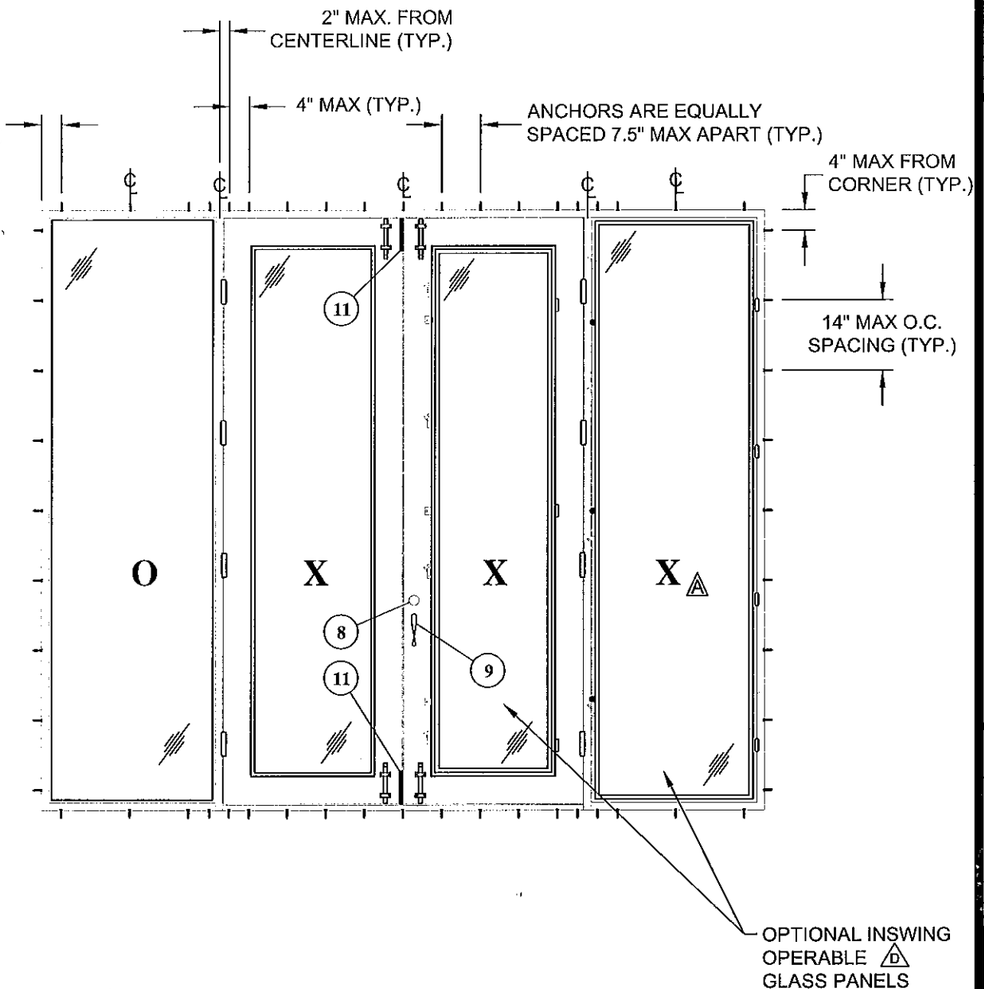

NOTE:
HINGES SHOWN ARE THE MINIMUM REQUIRED. ADDITIONAL HINGES, IF DESIRED, MAY BE USED. MINIMUM OF (4) STEEL SWEEP LOCKS ON OPTIONAL INSWING OPERABLE GLASS PANELS. D

ELEVATION
INTERIOR VIEW

ANCHOR LAYOUT
INTERIOR VIEW

PROJECT# 412-0304

REV	DESCRIPTION	DATE	BY
D	PER MIAMI-DADE COMMENTS 7/01/09	07/15/09	SMC
C	PER MIAMI-DADE COMMENTS 5/12/09	06/24/09	SMC
A	PER MIAMI-DADE COMMENTS 01/04/09	01/12/09	SMC

VINTAGE IRONWORKS
987 JOSIANE COURT, SUITE 1064
ALTAMONTE SPRINGS, FLORIDA 32701

TITLE: STEEL INSWING DOORS W/ & W/O SIDELITES & TRANSOM ELEVATION & ANCHOR LAYOUT

DRAWN BY: CB | DATE: 07/22/08
SCALE: N.T.S. | DRAWNING NO: VIN0002
REV: D | SHEET: 2 OF 14

PREPARED BY: PTC
PTC Product Design Group, LLC
P.O. Box 520775
Longwood, Florida 32752
Phone 321.690.1788
Fax 321.690.1789
Email: info@ptc-corp.com

Robert J. Amoruso P.E.
FL P.E. No. 49752

FBPE Certificate of Authorization NO. 25935

PRODUCT REVISED
as complying with the Florida Building Code
Acceptance No 12-0604.03
Expiration Date 09/09/2014
By
Miami Dade Product Control

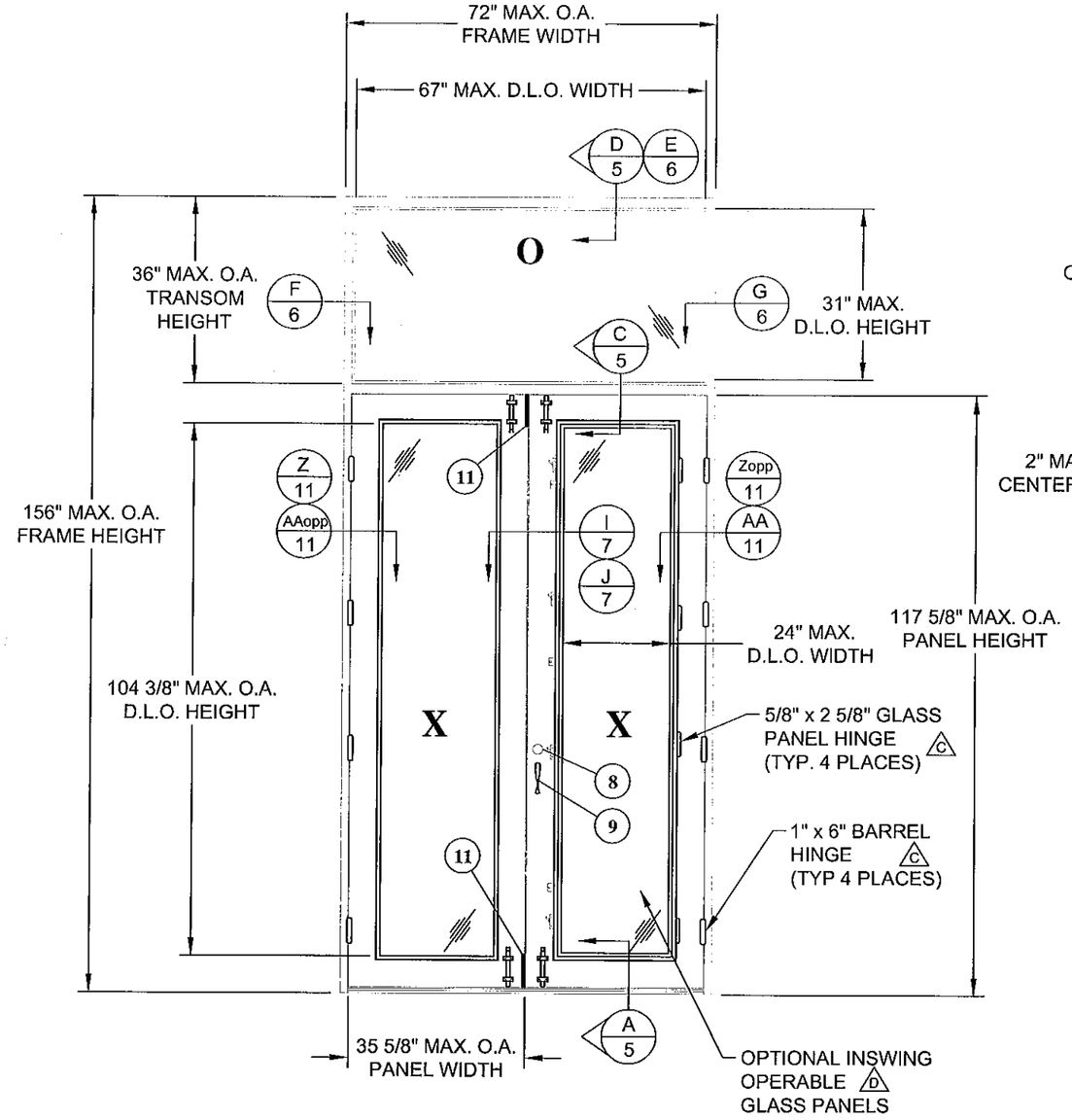

ELEVATION

INTERIOR VIEW

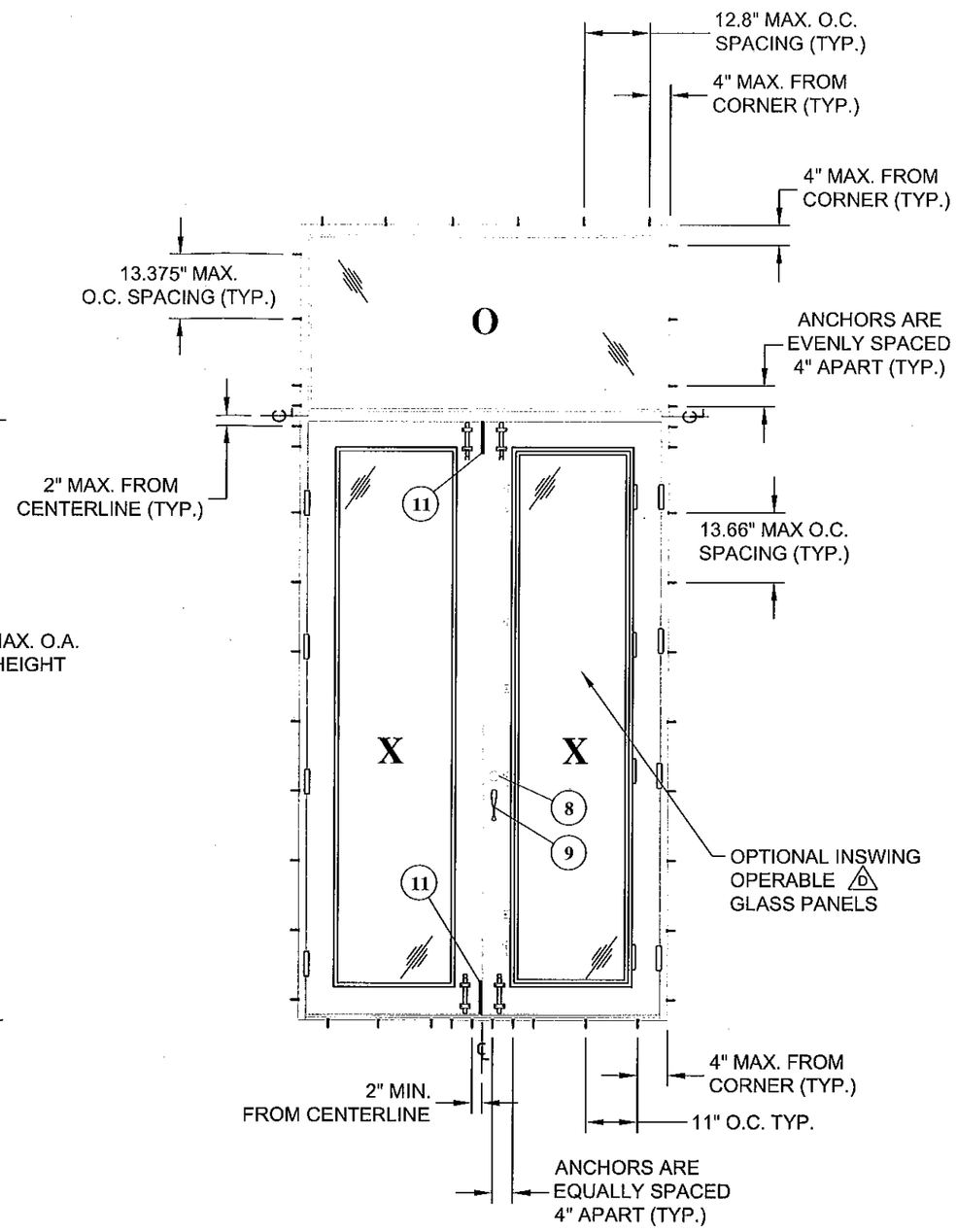

ANCHOR LAYOUT

INTERIOR VIEW

NOTE:
HINGES SHOWN ARE THE MINIMUM REQUIRED. ADDITIONAL HINGES, IF DESIRED, MAY BE USED. MINIMUM OF (4) STEEL SWEEP LOCKS ON OPTIONAL INSWING OPERABLE GLASS PANELS. D

PROJECT# 412-0304

REV	DESCRIPTION	DATE	BY
D	PER MIAMI-DADE COMMENTS 7/01/09	07/15/09	SMC
C	PER MIAMI-DADE COMMENTS 5/12/09	06/24/09	SMC

VINTAGE IRONWORKS
987 JOSIANE COURT, SUITE 1064
ALTAMONTE SPRINGS, FLORIDA 32701

TITLE: STEEL INSWING DOORS W/ & W/O SIDELITES & TRANSOM ELEVATION & ANCHOR LAYOUT

DRAWN BY:	DATE:	SCALE:	DRAWNING NO:	REV:	SHEET:
CB	07/22/08	N.T.S.	VIN0002	D	3 OF 14

PREPARED BY:
FTC Product Design Group, LLC
P.O. Box 520775
Longwood, Florida 32752
Phone 321.690.1788
Fax 321.690.1789
Email: info@ftc-corp.com

Robert J. Amoruso P.E.
FL P.E. No. 49752

FBPE Certificate of Authorization NO. 25935

PRODUCT REVISED
as complying with the Florida
Building Code
Acceptance No
Expiration Date 12-06-09 12-06-14
By
Miami Dade Product Control

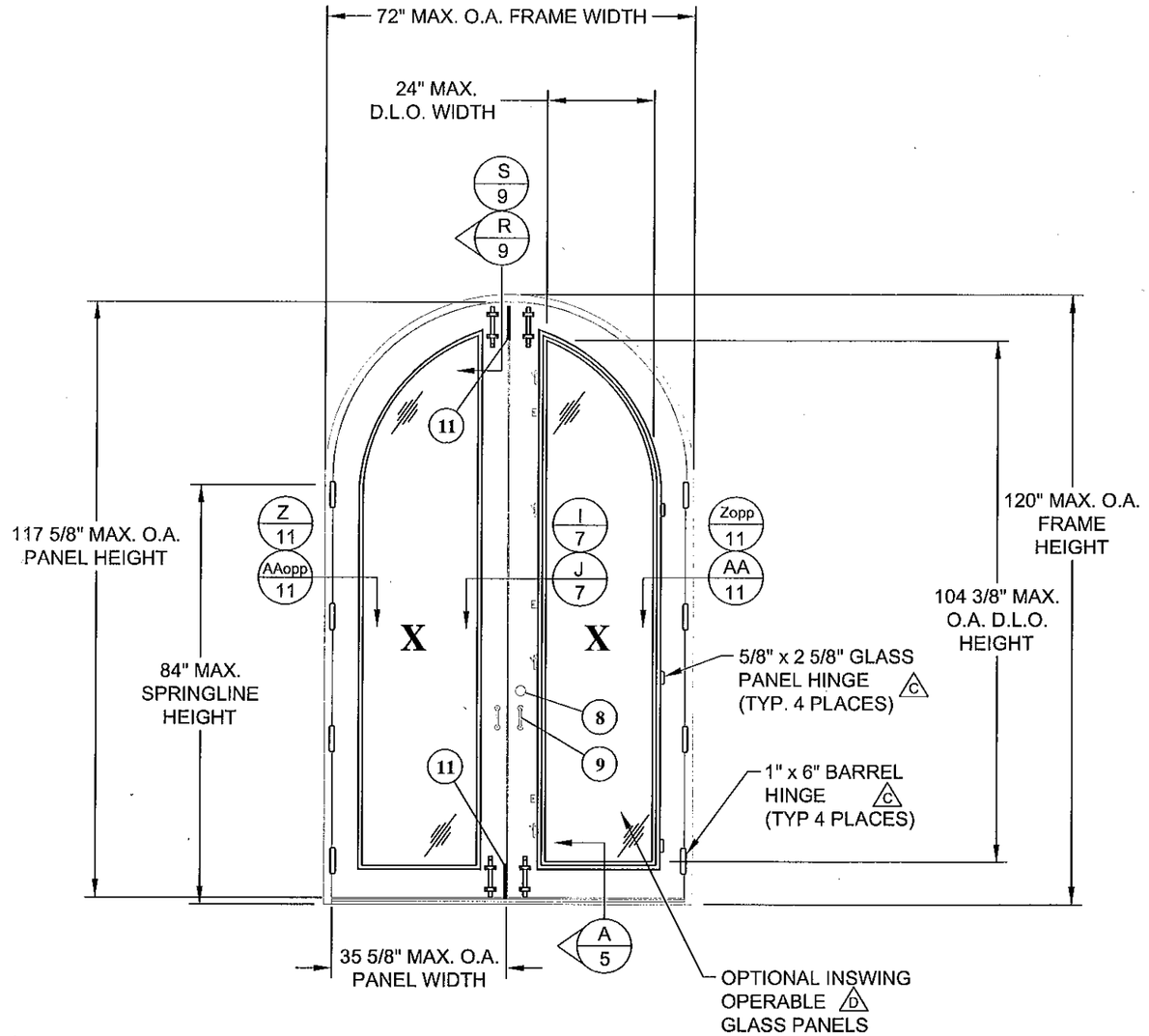

ELEVATION

INTERIOR VIEW

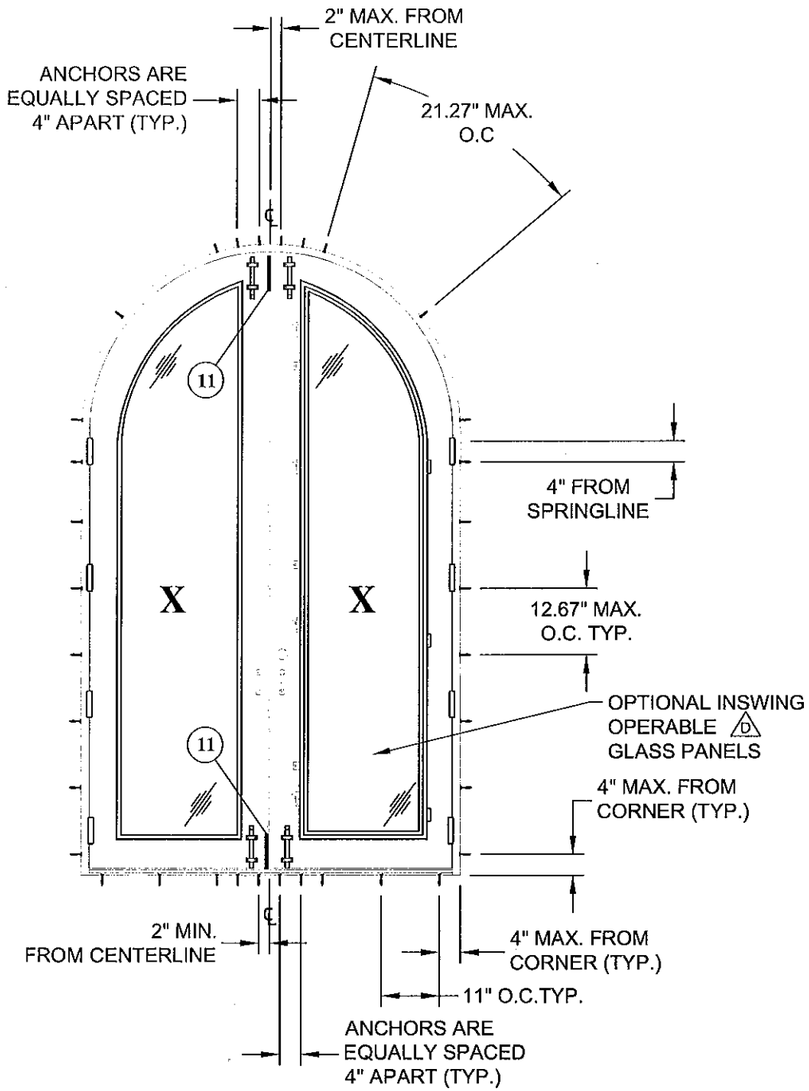

ANCHOR LAYOUT

INTERIOR VIEW

NOTE:
HINGES SHOWN ARE THE MINIMUM REQUIRED. ADDITIONAL HINGES, IF DESIRED, MAY BE USED. MINIMUM OF (4) STEEL SWEEP LOCKS ON OPTIONAL INSWING OPERABLE GLASS PANELS. D

PROJECT# 412-0304

REV	DESCRIPTION	DATE	BY
D	PER MIAMI-DADE COMMENTS 7/01/09	07/15/09	SMC
C	PER MIAMI-DADE COMMENTS 5/12/09	06/24/09	SMC

VINTAGE IRONWORKS
987 JOSIANE COURT, SUITE 1064
ALTAMONTE SPRINGS, FLORIDA 32701

TITLE: STEEL INSWING DOORS W/ & W/O SIDELITES & TRANSOM ELEVATION & ANCHOR LAYOUT

DRAWN BY: CB
DATE: 07/22/08
SCALE: N.T.S.
DRAWING NO: VIN0002
REV: D
SHEET: 4 OF 14

PREPARED BY:
PTC Product Design Group, LLC
P.O. Box 520775
Longwood, Florida 32752
Phone 321.690.1788
Fax 321.690.1789
Email: info@ptc-corp.com

Robert J. Amoruso P.E.
FL P.E. No. 49752

FBPE Certificate of Authorization NO. 25935

PRODUCT REVISED
as complying with the Florida
Building Code
Acceptance No. 12-0604.03
Expiration Date 09/09/14
By
Miami Dade Product Control

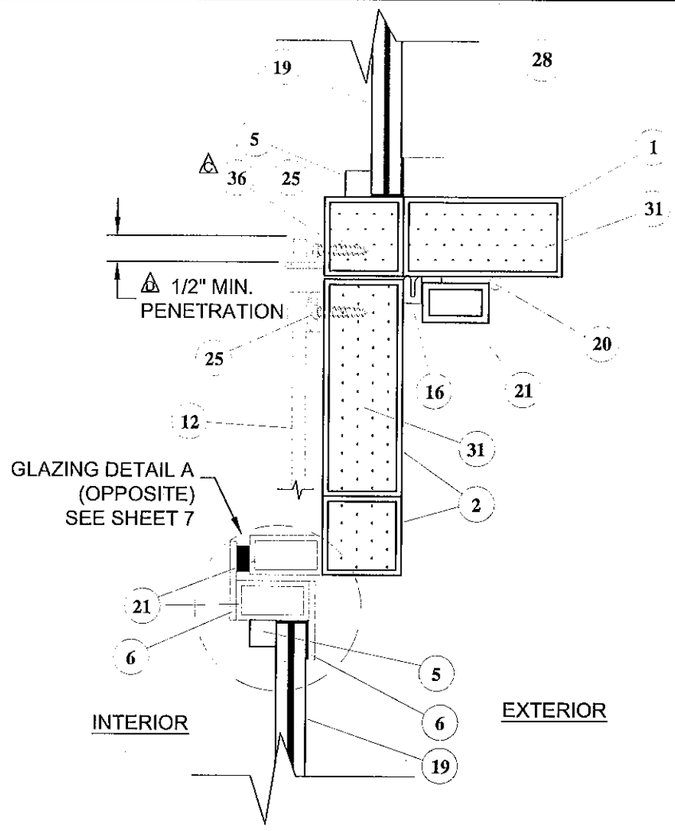

C/5 VERTICAL SECTION

HORIZONTAL MULLION

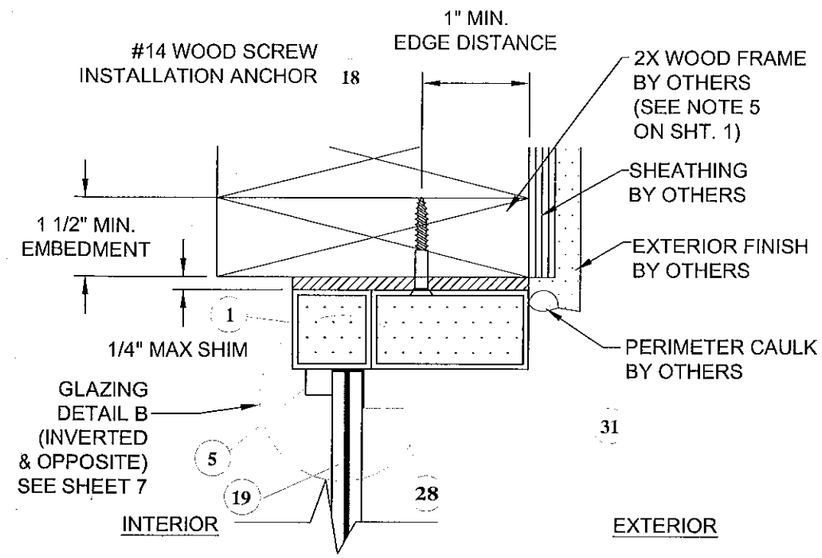

D/5 VERTICAL SECTION

HEAD - FIXED TRANSOM / SIDELITE
WOOD SUBSTRATE

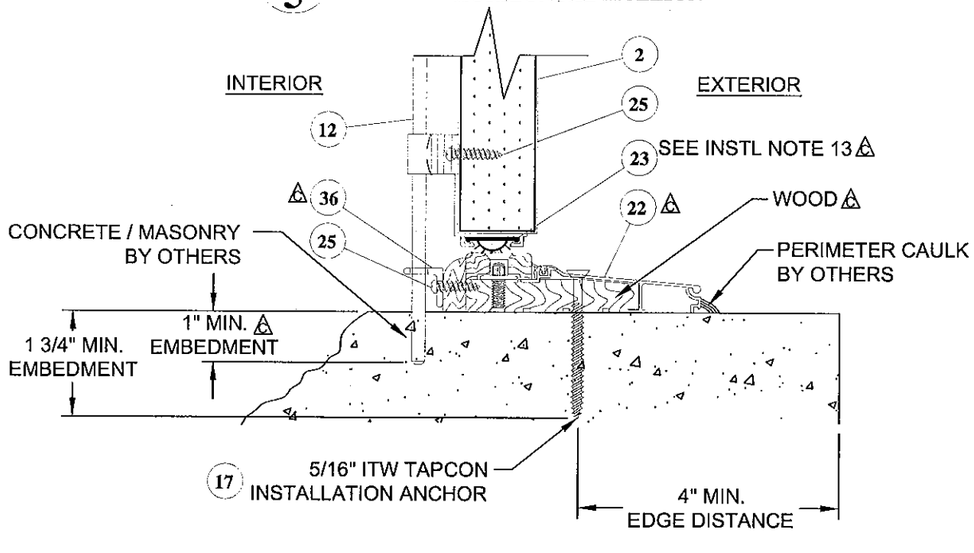

A/5 VERTICAL SECTION

THRESHOLD - FRAME DOOR
CONCRETE / MASONRY SUBSTRATE

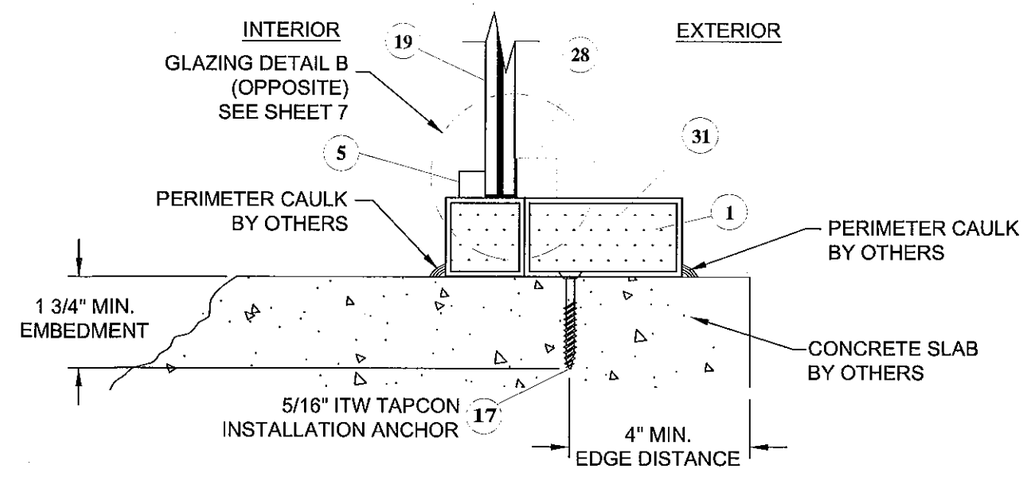

B/5 VERTICAL SECTION

SILL - FIXED SIDELITE
CONCRETE / MASONRY SUBSTRATE

PROJECT# 412-0304

REV	DESCRIPTION	DATE	BY
D	PER MIAMI-DADE COMMENTS 7/01/09	07/15/09	SMC
C	PER MIAMI-DADE 5/20/09	06/24/09	SMC

VINTAGE IRONWORKS
987 JOSIANE COURT, SUITE 1064
ALTAMONTE SPRINGS, FLORIDA 32701

TITLE: STEEL INSWING DOORS W/ & W/O SIDELITES & TRANSOM VERTICAL SECTIONS

DRAWN BY: CB
DATE: 07/22/08
SCALE: N.T.S.
DRAWNING NO: VIN0002
REV: D
SHEET: 5 OF 14

PREPARED BY:
PTC Product Design Group, LLC
P.O. Box 520775
Longwood, Florida 32752
Phone 321.690.1788
Fax 321.690.1789
Email: info@ptc-corp.com

Robert J. Amoruso P.E.
FL P.E. No. 49752

FBPE Certificate of Authorization NO. 25935

PRODUCT REVISED
as complying with the Florida
Building Code
Acceptance No 12-0604.03
Expiration Date 09/10/2014
By
Miami Dade Product Control

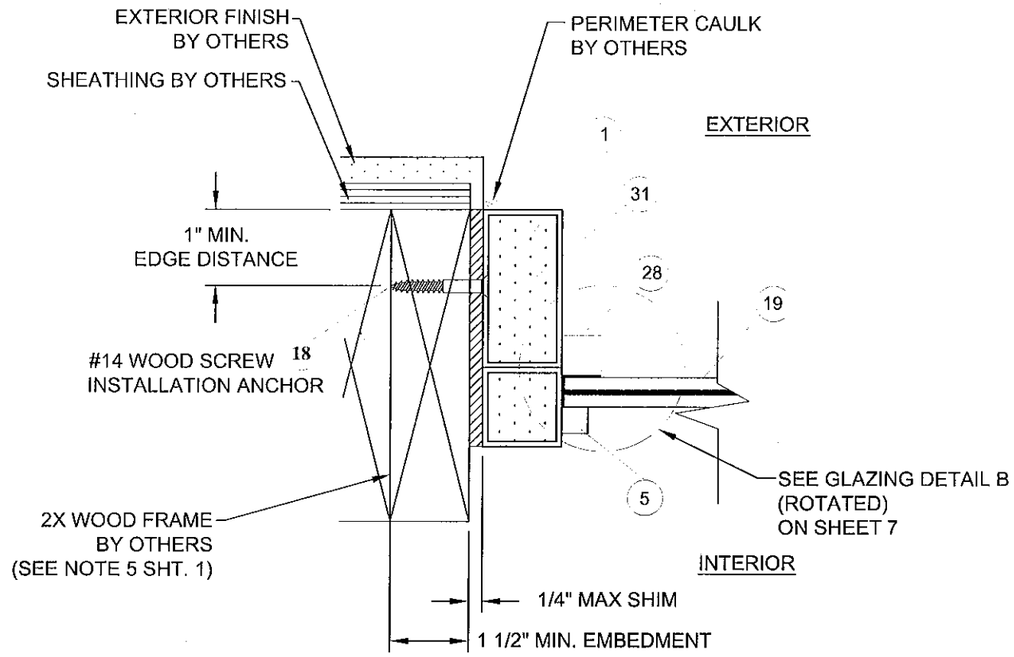

F/6 HORIZONTAL SECTION

JAMB - FIXED TRANSOM & SIDELITE
WOOD FRAME SUBSTRATE

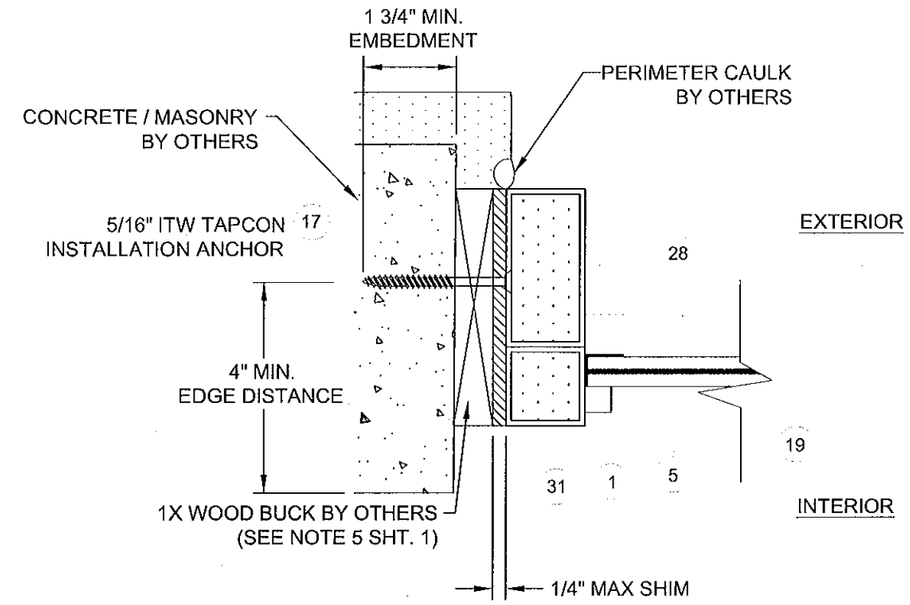

G/6 HORIZONTAL SECTION

JAMB - FIXED TRANSOM & SIDELITE
CONCRETE / MASONRY SUBSTRATE

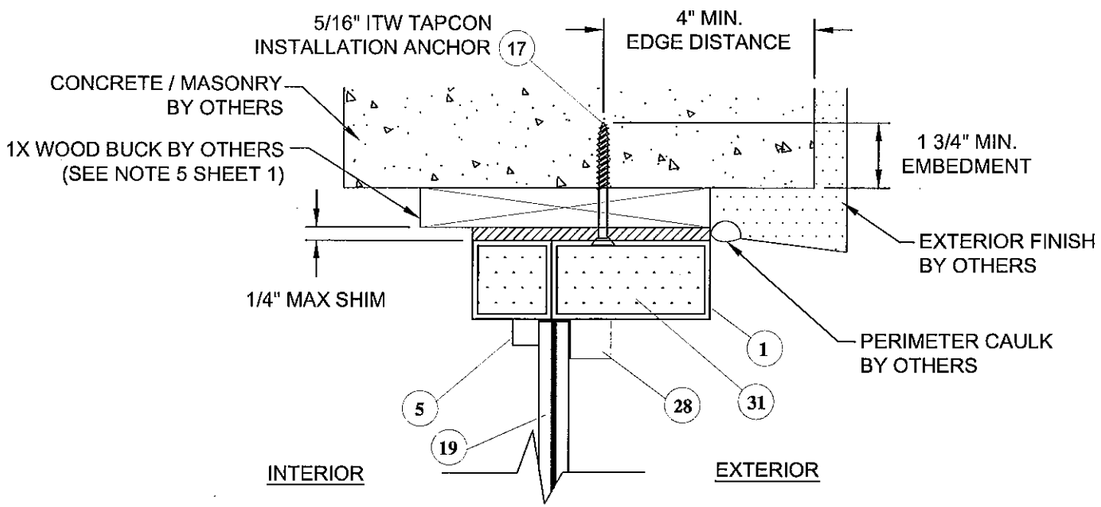

E/6 VERTICAL SECTION

HEAD - FIXED TRANSOM / SIDELITE
CONCRETE/ MASONRY SUBSTRATE

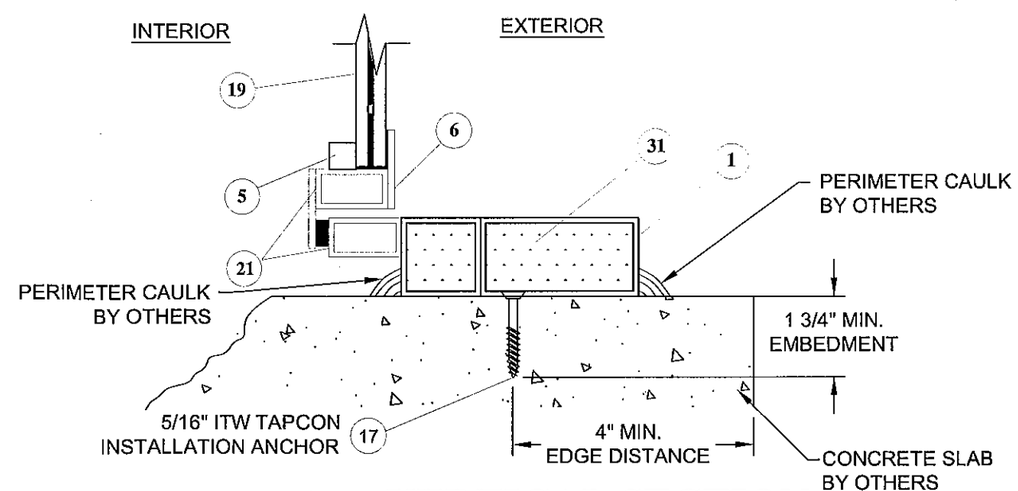

H/6 VERTICAL SECTION

SILL - SIDELITE W/ OPT. OPERABLE GLAZING
CONCRETE / MASONRY SUBSTRATE

REV	DESCRIPTION	DATE	BY
D	PER MIAMI-DADE COMMENTS 7/01/09	07/15/09	SMC
C	PER MIAMI-DADE 05/20/09	06/2409	SMC

PROJECT# 412-0304

VINTAGE IRONWORKS
987 JOSIANE COURT, SUITE 1064
ALTAMONTE SPRINGS, FLORIDA 32701

TITLE: STEEL INSWING DOORS W/ & W/O SIDELITES & TRANSOM
VERTICAL AND HORIZONTAL SECTIONS

DRAWN BY: CB | DATE: 07/22/08
SCALE: N.T.S. | DRAWING NO: VIN0002
REV: D | SHEET: 6 OF 14

PREPARED BY:
PTC Product Design Group, LLC
P.O. Box 520775
Longwood, Florida 32752
Phone 321.690.1798
Fax 321.690.1799
Email: info@ptc-corp.com

Robert J. Amoruso P.E.
FL P.E. No. 49752

FBPE Certificate of Authorization NO. 25935

PRODUCT REVISED
as complying with the Florida
Building Code
Acceptance No 12-0604.03
Expiration Date 09/09/2014
By
Miami Dade Product Control

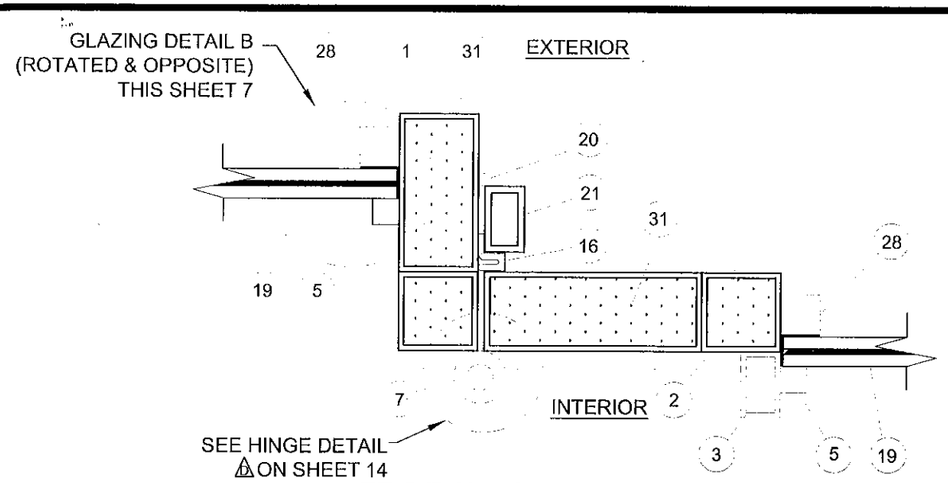

K/7 HORIZONTAL SECTION

VERTICAL MULLION
AT FIXED SIDELITE

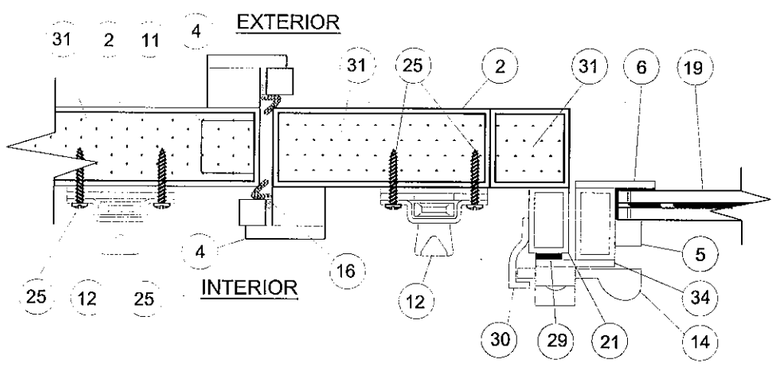

J/7 HORIZONTAL SECTION

ASTRAGAL W/ OPTIONAL
OPERABLE GLAZING PANEL

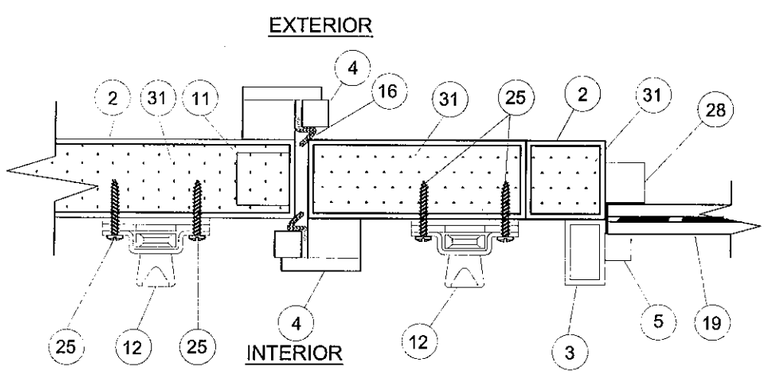

I/7 HORIZONTAL SECTION

ASTRAGAL W/ FIXED GLAZING PANEL

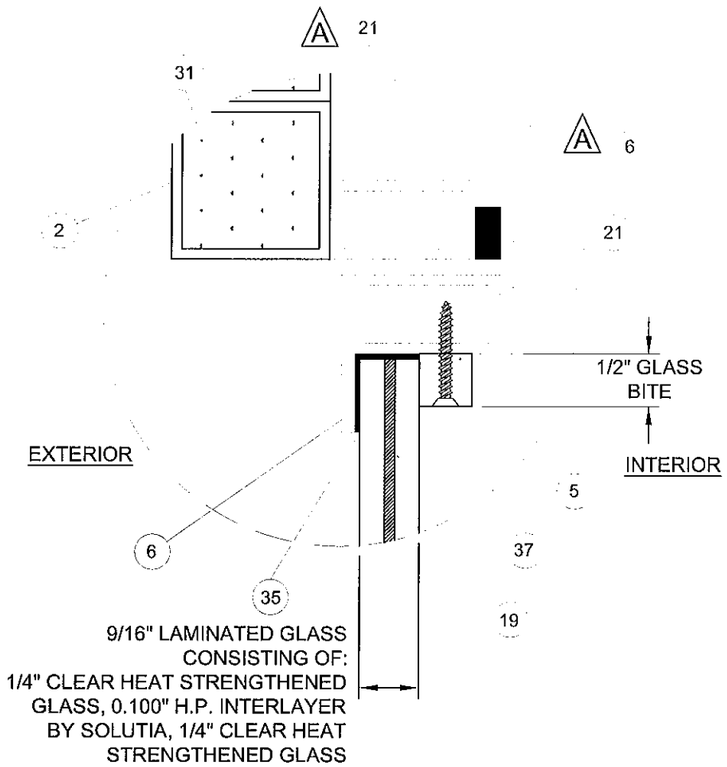

GLAZING DETAIL A

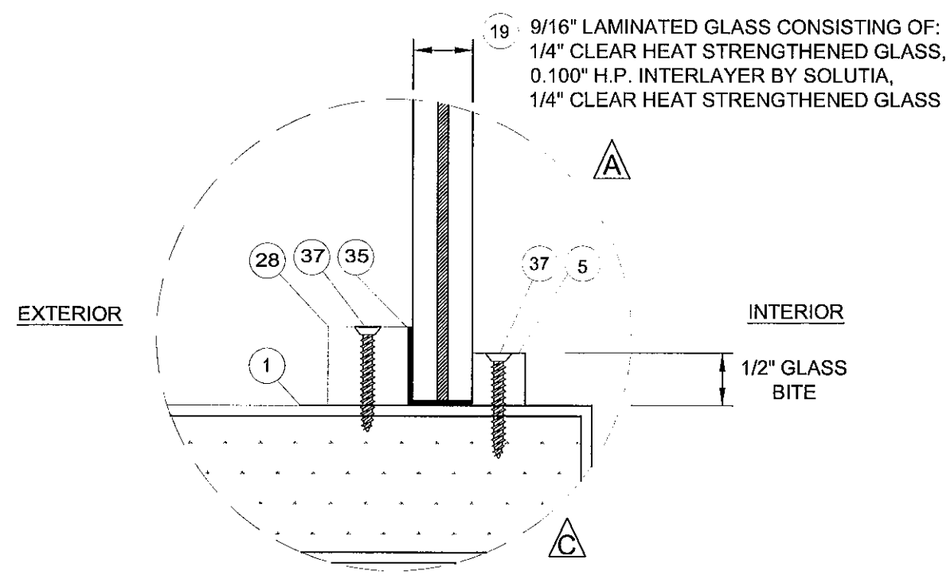

GLAZING DETAIL B

REV	DESCRIPTION	DATE	BY
D	PER MIAMI-DADE COMMENTS 7/01/09	07/15/09	SMC
C	PER MIAMI-DADE 05/20/09	06/24/09	SMC
A	PER MIAMI-DADE COMMENTS 01/04/09	01/12/09	SMC

PROJECT# 412-0304

VINTAGE IRONWORKS
987 JOSIANE COURT, SUITE 1064
ALTAMONTE SPRINGS, FLORIDA 32701

TITLE: STEEL INSWING DOORS W/ & W/O SIDELITES & TRANSOM HORIZONTAL SECTIONS AND GLAZING DETAILS

DRAWN BY: CB
DATE: 07/22/08
SCALE: N.T.S.
DRAWNING NO: VIN0002
REV: D
SHEET: 7 OF 14

PREPARED BY:
PTC Product Design Group, LLC
P.O. Box 520775
Longwood, Florida 32752
Phone 321.690.1788
Fax 321.690.1789
Email: info@ptc-corp.com

Robert J. Amoruso P.E.
FL P.E. No. 49752

FBPE Certificate of Authorization NO. 25935

PRODUCT REVISED
as complying with the Florida
Building Code
Acceptance No 12-0604.03
Expiration Date 09/09/14
By
Miami Dade Product Control

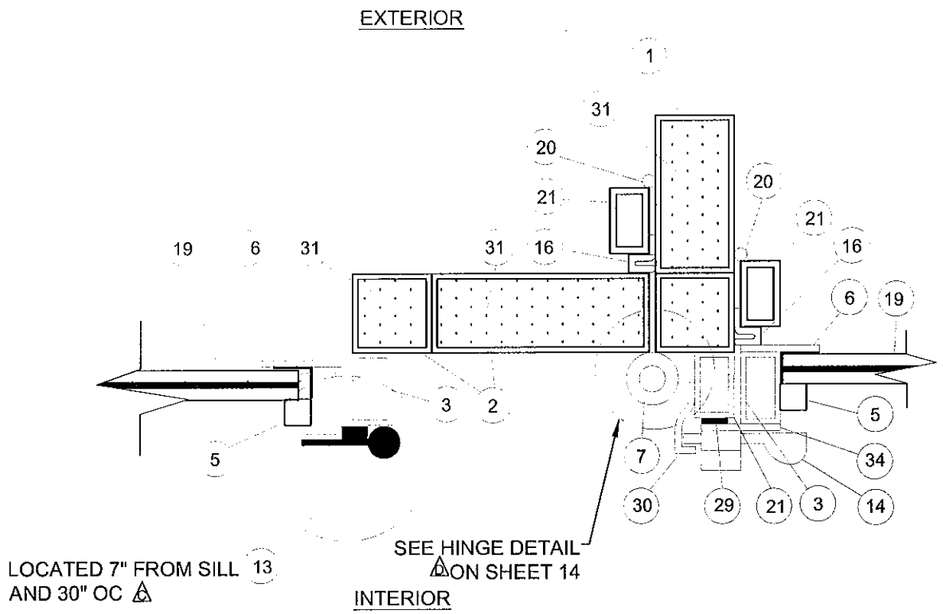

N/8 HORIZONTAL SECTION

VERTICAL MULLION AT SIDELITE
W/ OPTIONAL OPERABLE GLAZING

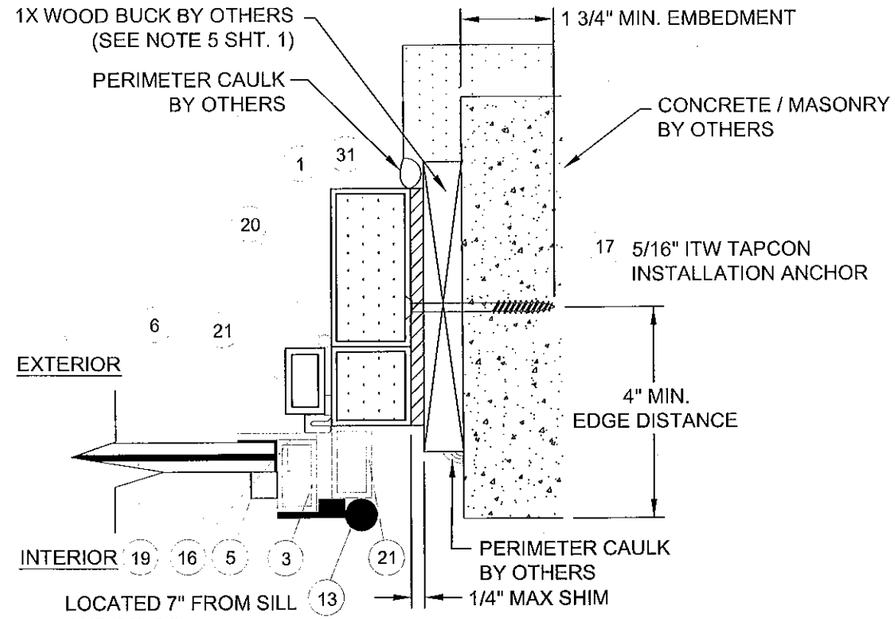

L/8 HORIZONTAL SECTION

JAMB - SIDELITE W/ OPT. OPERABLE GLAZING
CONCRETE / MASONRY SUBSTRATE

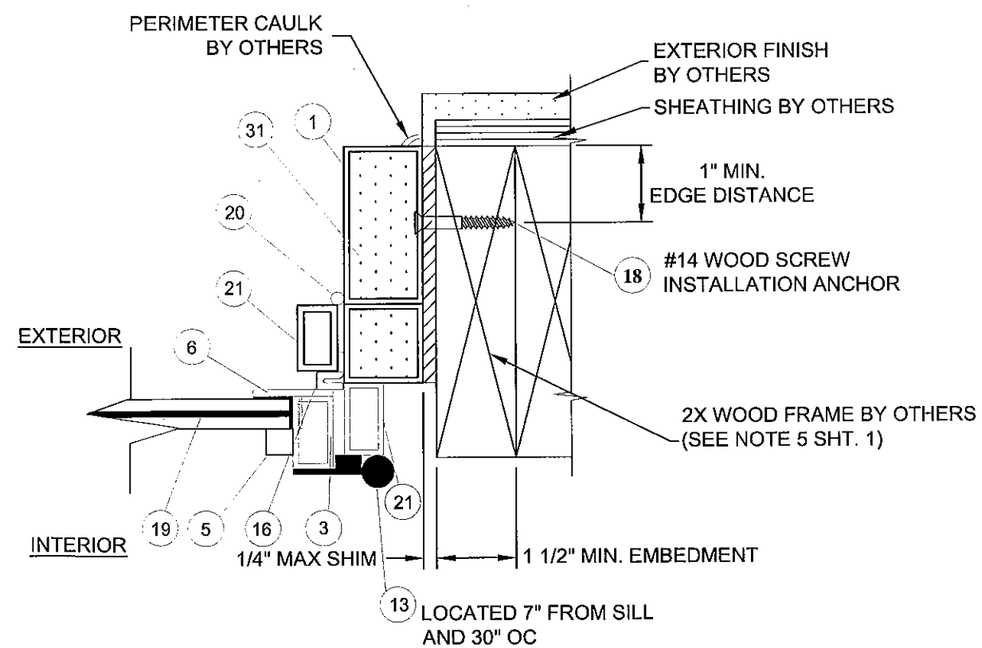

M/8 HORIZONTAL SECTION

JAMB - SIDELITE W/ OPT. OPERABLE GLAZING
WOOD FRAME SUBSTRATE

PROJECT# 412-0304

REV	DESCRIPTION	DATE	BY
D	PER MIAMI-DADE COMMENTS 7/01/09	07/15/09	SMC
C	PER MIAMI-DADE 05/20/09	06/24/09	SMC

VINTAGE IRONWORKS
987 JOSIANE COURT, SUITE 1064
ALTAMONTE SPRINGS, FLORIDA 32701

TITLE: STEEL INSWING DOORS W/ & W/O SIDELITES & TRANSOM HORIZONTAL SECTIONS

DRAWN BY: CB
DATE: 07/22/08
SCALE: N.T.S.
DRAWING NO: VIN0002
REV: D
SHEET: 8 OF 14

PREPARED BY:
PTC Product Design Group, LLC
P.O. Box 520775
Longwood, Florida 32752
Phone 321.690.1788
Fax 321.690.1789
Email: info@ptc-corp.com

Robert J. Amoruso P.E.
FL P.E. No. 49752

FBPE Certificate of Authorization NO. 25935

PRODUCT REVISED
as complying with the Florida
Building Code
Acceptance No 12-0604.03
Expiration Date 09/09/2014
By:
Miami Dade Product Control

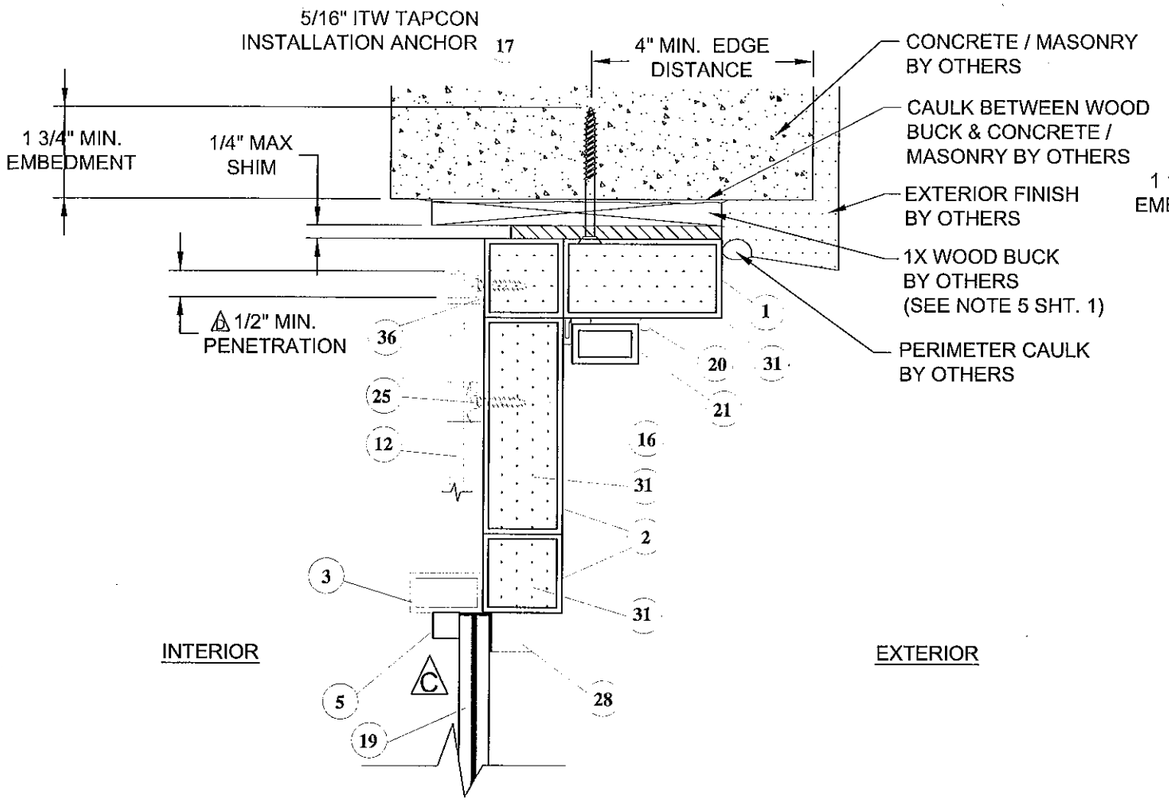

R/9 VERTICAL SECTION

HEAD - FRAME DOOR
CONCRETE / MASONRY SUBSTRATE

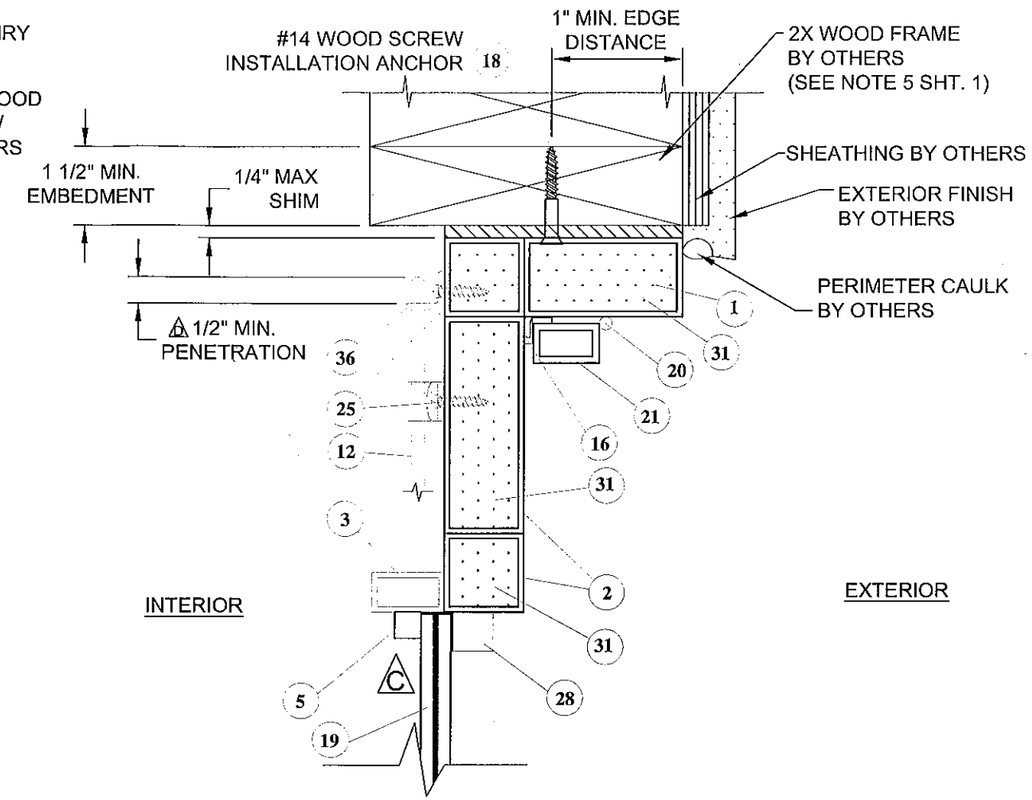

S/9 VERTICAL SECTION

HEAD - FRAME DOOR
WOOD SUBSTRATE

REV	DESCRIPTION	DATE	BY
D	PER MIAMI-DADE COMMENTS 7/01/09	07/15/09	SMC
C	PER MIAMI-DADE 5/20/09	06/24/09	SMC

PROJECT# 412-0304

VINTAGE IRONWORKS
987 JOSIANE COURT, SUITE 1064
ALTAMONTE SPRINGS, FLORIDA 32701

TITLE: STEEL INSWING DOORS W/ & W/O SIDELITES & TRANSOM VERTICAL SECTIONS

DRAWN BY: CB
DATE: 07/22/08
SCALE: N.T.S.
DRAWNING NO: VIN0002
REV: D
SHEET: 9 OF 14

PREPARED BY:
PTC Product Design Group, LLC
P.O. Box 520775
Longwood, Florida 32752
Phone 321.690.1798
Fax 321.690.1799
Email: info@ptc-corp.com

Robert J. Amoruso P.E.
FL P.E. No. 49752

FBPE Certificate of Authorization NO. 25935

PRODUCT REVISED
as complying with the Florida
Building Code
Acceptance No. 12-0604.03
Expiration Date 2/10/2014
by
Miami Dade Product Control

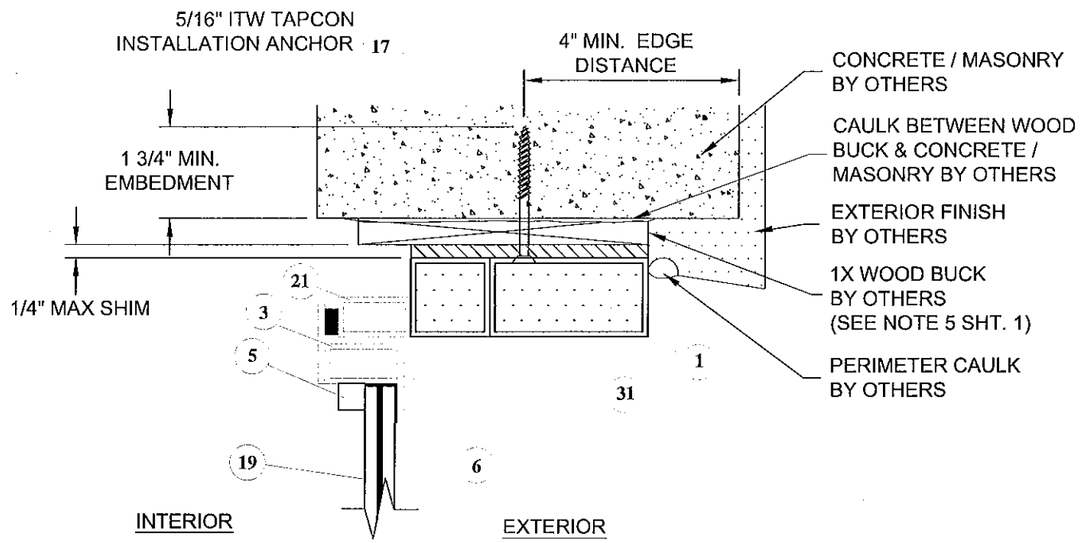

U/10 VERTICAL SECTION

HEAD FRAME - SIDELITE W/ OPT. OPERABLE GLAZING
CONCRETE / MASONRY

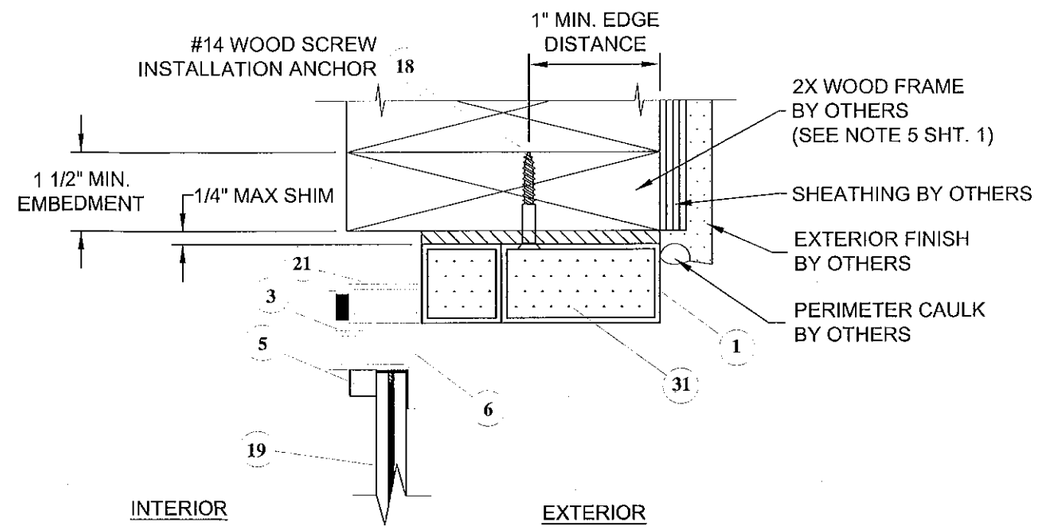

V/10 VERTICAL SECTION

HEAD FRAME - SIDELITE W/ OPT. OPERABLE GLAZING
WOOD SUBSTRATE

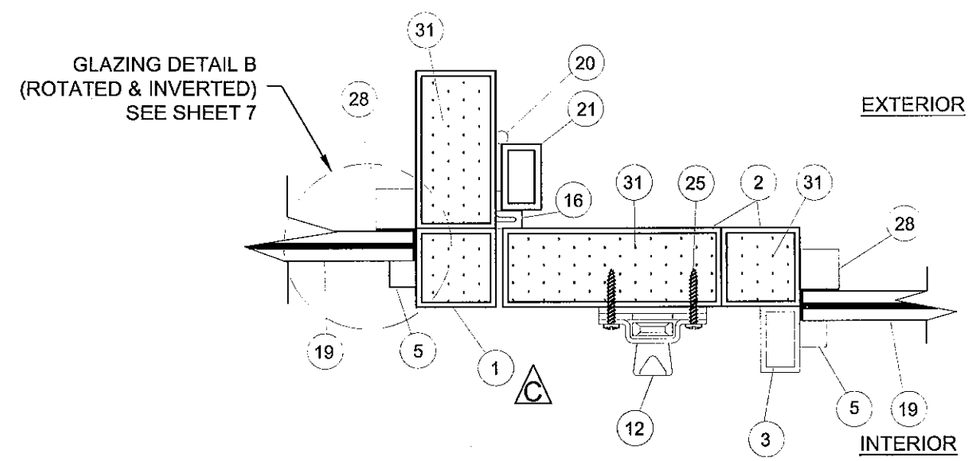

W/10 HORIZONTAL SECTION

LOCKSTILE INTO MULLION

REV	DESCRIPTION	DATE	BY
D	PER MIAMI-DADE COMMENTS 7/01/09	07/15/09	SMC
C	PER MIAMI-DADE 05/20/09	06/24/09	SMC

PROJECT# 412-0304

VINTAGE IRONWORKS
987 JOSIANE COURT, SUITE 1064
ALTAMONTE SPRINGS, FLORIDA 32701

TITLE: STEEL INSWING DOORS W/ & W/O SIDELITES & TRANSOM
VERTICAL AND HORIZONTAL SECTIONS

DRAWN BY: CB
DATE: 07/22/08
SCALE: N.T.S.
DRAWING NO: VIN0002
REV: D
SHEET: 10 OF 14

PREPARED BY:
PTC Product Design Group, LLC
P.O. Box 520775
Longwood, Florida 32752
Phone 321.690.1788
Fax 321.690.1789
Email: info@ptc-corp.com

Robert J. Amoruso P.E.
FL P.E. No. 49752

FBPE Certificate of Authorization NO. 25935

PRODUCT REVISED
as complying with the Florida
Building Code
Acceptance No 12-0604.03
Expiration Date 09/09/2014
By
Miami Dade Product Control

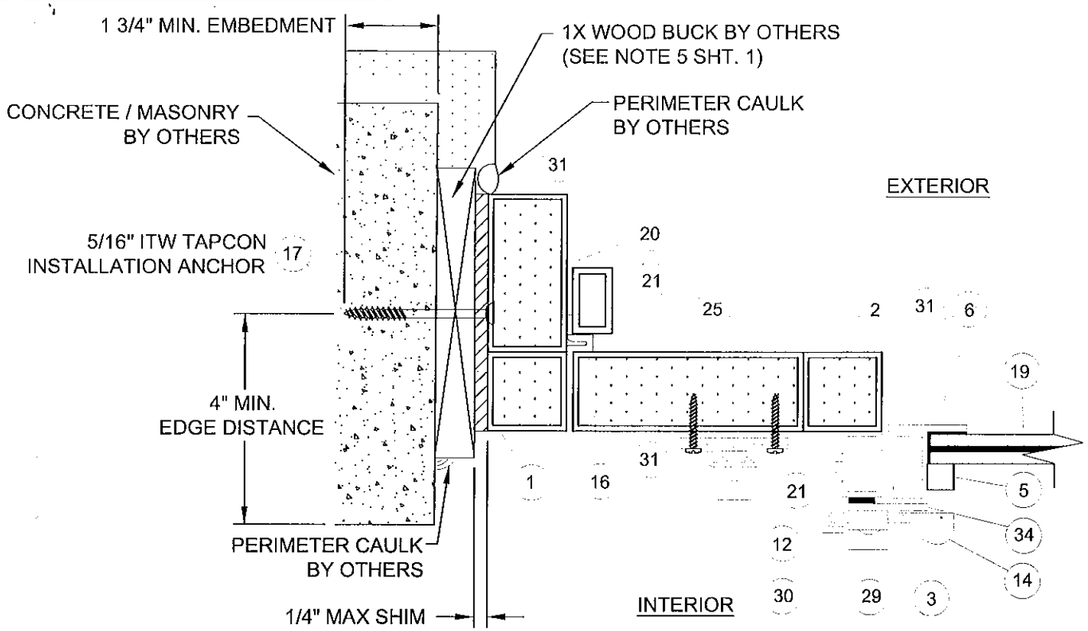

Y/11 HORIZONTAL SECTION

JAMB - LOCKSTILE INTO
CONCRETE / MASONRY SUBSTRATE
W/ OPTIONAL OPERABLE GLAZING PANEL

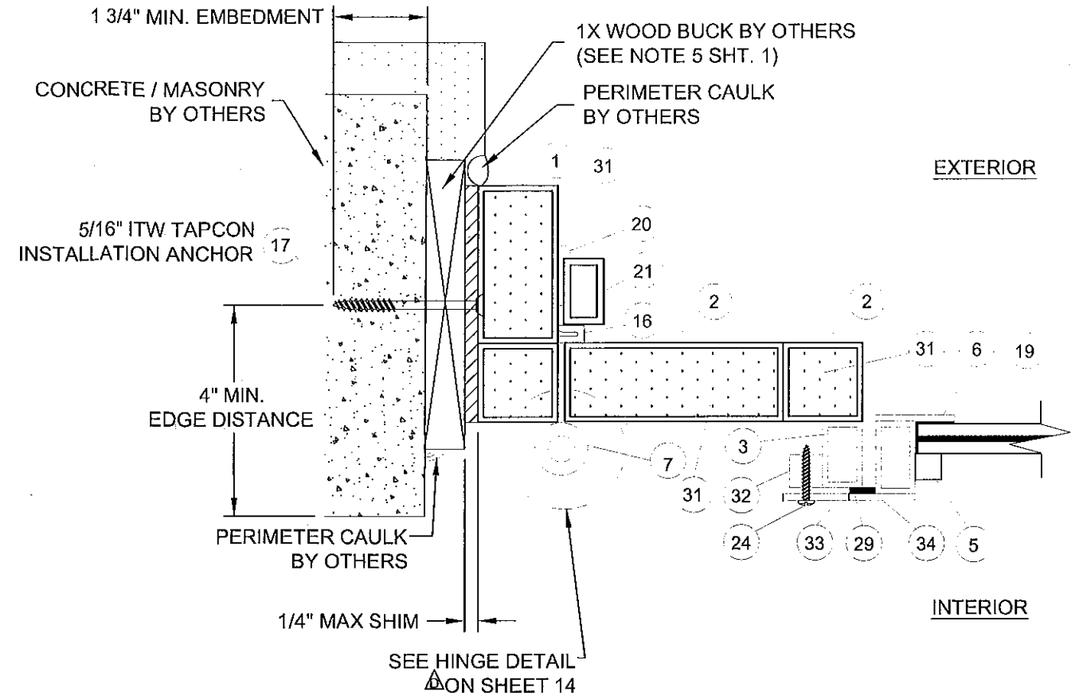

Z/11 HORIZONTAL SECTION

HINGE STILE INTO CONCRETE / MASONRYSUBSTRATE
W/ OPTIONAL OPERABLE GLAZING PANEL

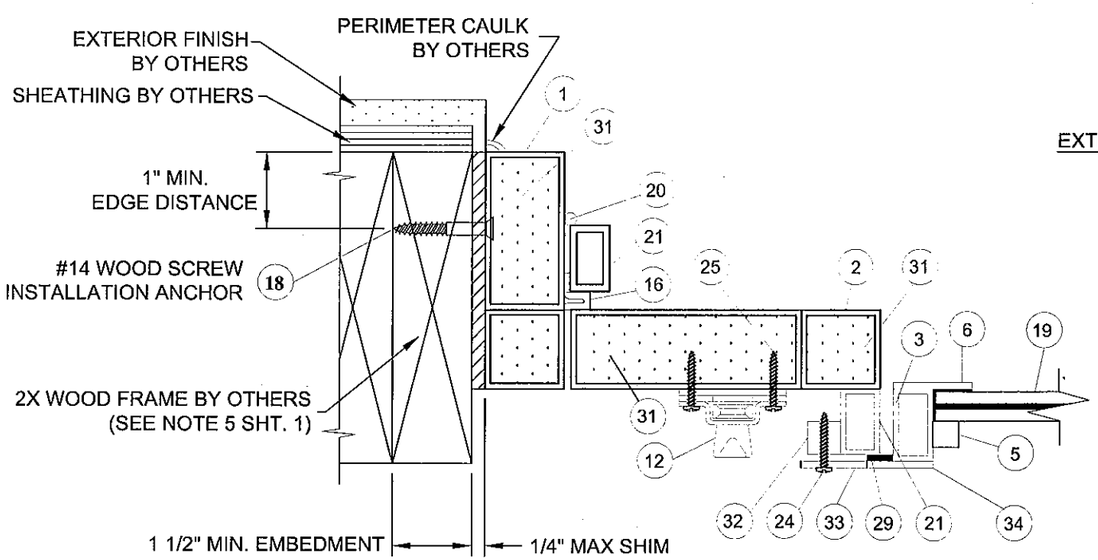

X/11 HORIZONTAL SECTION

JAMB - LOCKSTILE INTO
WOOD SUBSTRATE
W/ OPTIONAL OPERABLE GLAZING PANEL

EXTERIOR

INTERIOR

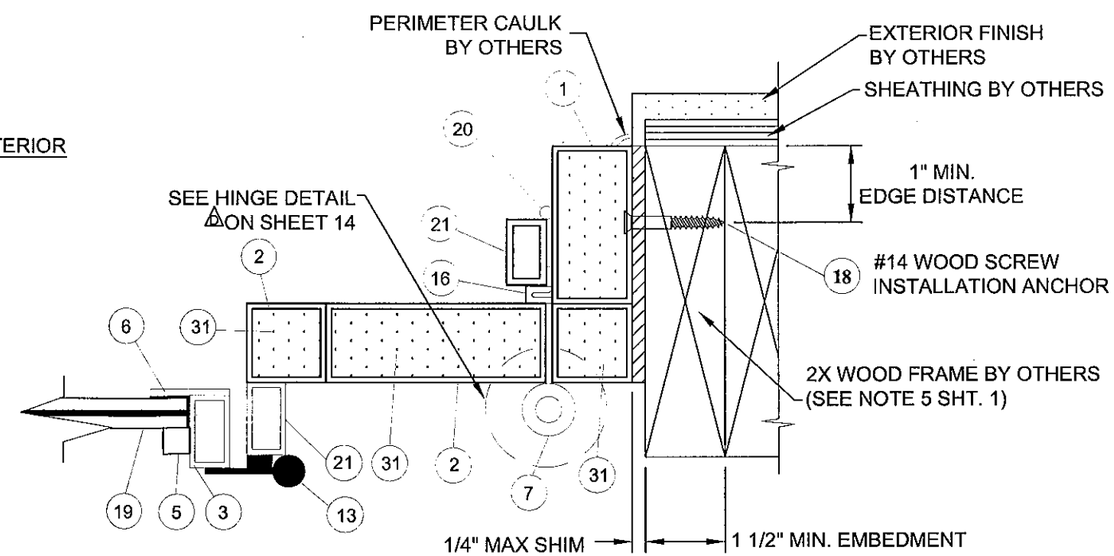

AA/11 HORIZONTAL SECTION

HINGE STILE INTO WOOD SUBSTRATE
W/ OPTIONAL OPERABLE GLAZING PANEL

REV	DESCRIPTION	DATE	BY
D	PER MIAMI-DADE COMMENTS 7/01/09	07/15/09	SMC
C	PER MIAMI-DADE 05/20/09	06/24/09	SMC

PROJECT# 412-0304

VINTAGE IRONWORKS
987 JOSIANE COURT, SUITE 1064
ALTAMONTE SPRINGS, FLORIDA 32701

TITLE: STEEL INSWING DOORS W/ & W/O SIDELITES & TRANSOM HORIZONTAL SECTIONS

DRAWN BY: CB
DATE: 07/22/08
SCALE: N.T.S.
DRAWWING NO: VIN0002
REV: D
SHEET: 11 OF 14

PREPARED BY:
PTC Product Design Group, LLC
P.O. Box 520775
Longwood, Florida 32752
Phone 321.690.1788
Fax 321.690.1789
Email: info@ptc-corp.com

Robert J. Amoruso P.E.
FL P.E. No. 49752

FBPE Certificate of Authorization NO. 25935

PRODUCT REVISED
as complying with the Florida
Building Code
Acceptance No 12-0604.03
Expiration Date 09/07/2014
By
Miami Dade Product Control

QUALIFIED CONFIGURATIONS

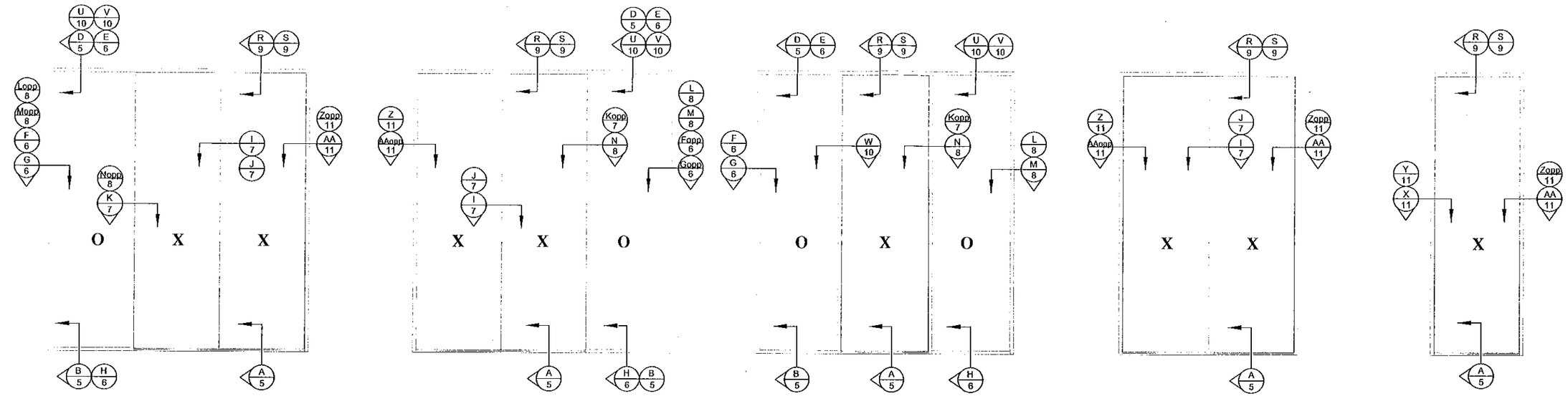

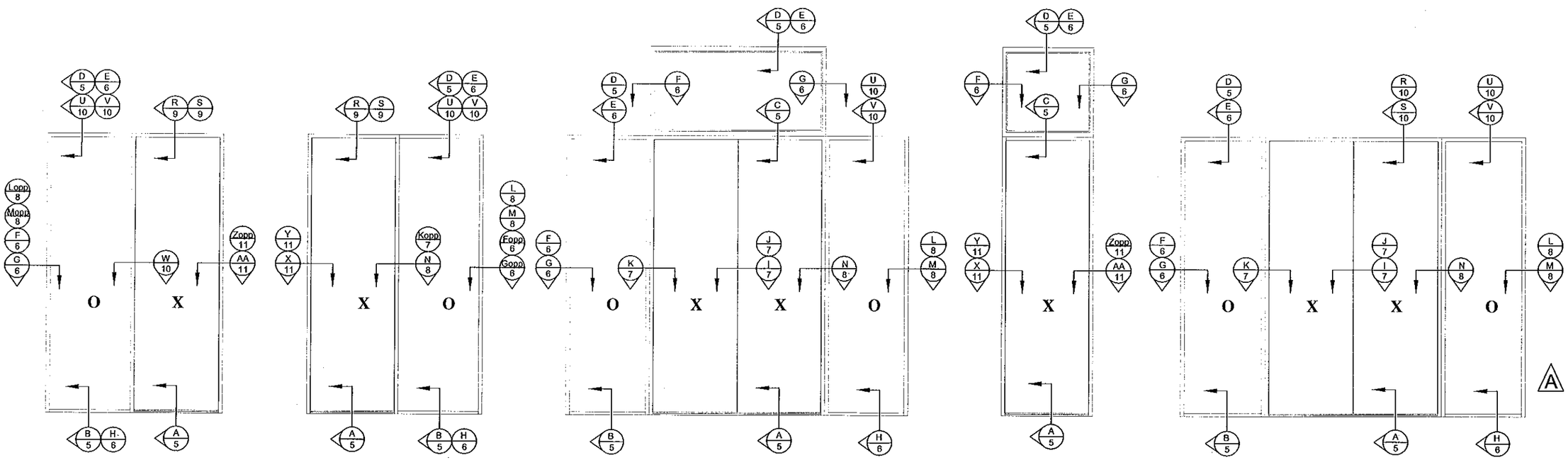

NOTE: ALL QUALIFIED CONFIGURATIONS REQUIRE SURFACE BOLTS ON ALL DOOR PANELS.

REV	DESCRIPTION	DATE	BY
A	PER MIAMI-DADE COMMENTS 01/04/09	01/12/09	SMC

PROJECT# 412-0304

VINTAGE IRONWORKS
987 JOSIANE COURT, SUITE 1064
ALTAMONTE SPRINGS, FLORIDA 32701

TITLE: STEEL INSWING DOORS W/ & W/O SIDELITES & TRANSOM QUALIFIED CONFIGURATIONS

DRAWN BY: CB	DATE: 07/22/08		
SCALE: N.T.S.	DRAWING NO: VIN0002		
REV: A	SHEET: 12 OF 14		

PREPARED BY:
PTC Product Design Group, LLC
P.O. Box 520775
Longwood, Florida 32752
Phone 321.690.1788
Fax 321.690.1789
Email: info@ptc-corp.com

Robert J. Amoruso P.E.
FL P.E. No. 49752

FBPE Certificate of Authorization NO. 25935

PRODUCT REVISED
as complying with the Florida
Building Code
Acceptance No 12-0604.03
Expiration Date 09/09/2014
By
Miami Dade Product Control

1 EXTERIOR FRAME
14 GA. STEEL

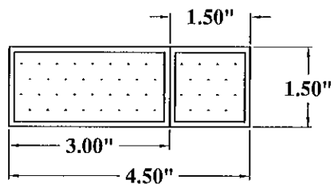

2 PANEL FRAME
14 GA. STEEL

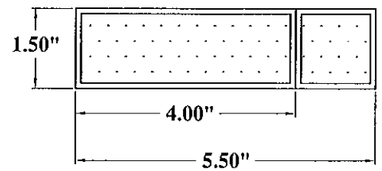

3 GLASS STOP
0.125" THICK

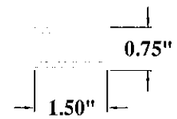

4 ASTRAGAL

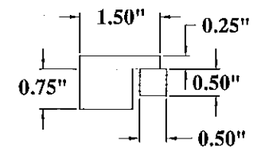

5 INTERIOR GLASS STOP

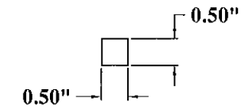

6 EXTERIOR GLASS STOP

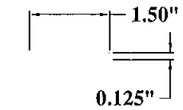

28 EXTERIOR GLASS STOP (D)

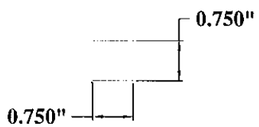

(C) 36 STRIKE

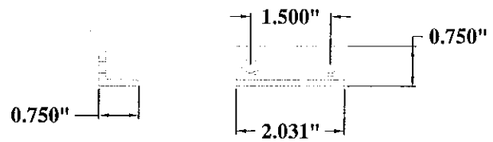

21 WEATHER STRIPPING SUPPORT
0.125" THICK

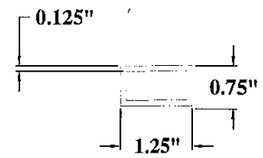

22 INSWING SADDLE THRESHOLD
(C) ALUMINUM (0.125" THICK)

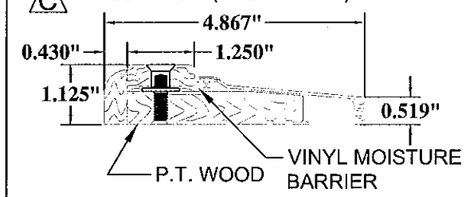

23 DOOR SWEEP
0.063" THICK

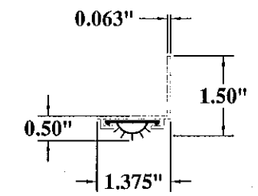

NOTE: THE COMBINATION OF ITEM# 3 AND #6 MAKES THE SIDELITE/ FIXED LITE GLAZING FRAME.

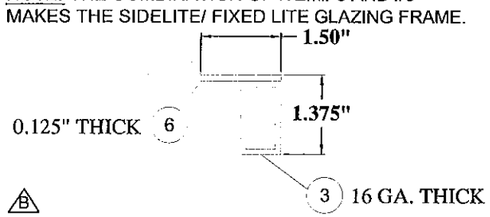

12 SURFACE BOLT (D)

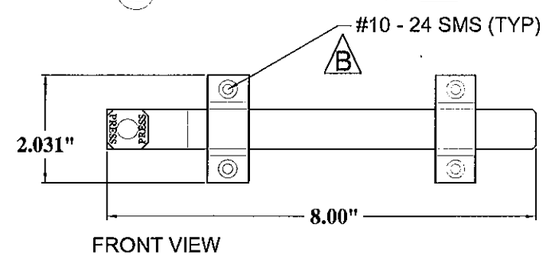

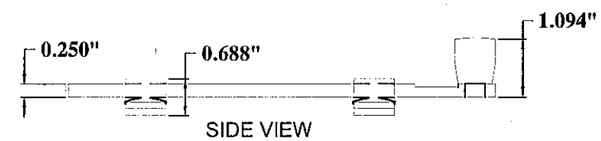

BILL OF MATERIALS

NO.	PART NO.	DESCRIPTION	MATERIAL	MANUF.
1		EXTERIOR FRAME: 1-14 GA. RECTANGULAR TUBE 1.50" X 3.00" AND 1-14 GA SQUARE TUBE 1.50 X 1.50	**	
2		EXTERIOR FRAME: 1-14 GA. RECTANGULAR TUBE 1.50" X 4.00" AND 1-14 GA SQUARE TUBE 1.50 X 1.50	**	
3		GLASS STOP: 16 GA. RECTANGULAR TUBE 0.75" X 1.25"	**	
4		ASTRAGAL: 3 PCS. 1 EACH (1.00" X 0.75"), (1.50" X 0.25") & (0.50" X 0.50")	ASTM A36	
5		INTERIOR GLASS STOP 0.50" X 0.50" SQUARE BAR	ASTM A36	
6		EXTERIOR GLASS STOP 0.125" X 1.50" SOLID FLAT BAR	ASTM A36	
7		1.00" X 6.00" BARREL HINGE, CUSTOM	ASTM A36	
8	8231	DEAD BOLT LOCK PREMIUM GRADE 1	BRASS	BALDWIN
9	5405	DOOR LATCH PREMIUM GRADE 1 OR EQUIVALENT	BRASS	BALDWIN
11	550	INACTIVE PANEL FLUSH BOLT INTEGRAL LOCK 1.00" X 1.00" X 6.75"	BRASS	ROCKWOOD
12	580-8	SURFACE BOLT 8.00" LONG IVES #453 OR #454 OR EQUAL	BRASS	ROCKWOOD
13		GLASS PANEL HINGE (OPTIONAL) CUSTOM, 0.625" X 2.625	ASTM A-36	
14	2589B	GLASS PANEL LOCK (OPTIONAL)	BRASS	CRL
16	Q106D	WEATHERSTRIPPING, KERF	FOAM	PEMKO
17		5/16" ITW TAPCON W/ 1.75" MIN. EMBEDMENT	STEEL	ITW
18		#14 WOOD SCREW INSTALLATION ANCHOR W/ MIN. 1.50" EMBEDMENT	STEEL	
19		9/16" LAMINATED GLASS CONSISTING OF: 0.25" H.S. GLASS/ 0.100" H.R. INTERLAYER BY SOLUTIA/ 0.25" H.S. GLASS	GLASS	
20		.275" DOWEL	ASTM A36	
21		WEATHERSTRIPPING SUPPORT 0.75" X 1.25" RECTANGULAR TUBE	**	
22	94518DW	INSWING SADDLE THRESHOLD W/P.T. WOOD	6063 - T52	PEMKO

NO.	PART NO.	DESCRIPTION	MATERIAL	MANUF.
23	211DPK	DOOR SWEEP	6063 - T52	PEMKO
24		1/4-20 SMS SCREW	STEEL	
25		#10-24 SMS SCREW	STEEL	
26		0.125" X 1.50" BAR/STOP	ASTM A36	
27		1.50" X 1.50" X 1.75" BLOCK FLUSH BOLT RETAINING BLOCK	ASTM A36	CUSTOM
28		EXTERIOR GLASS STOP 0.75" X 0.75" SQUARE BAR	**	
29	60701	0.25" X 1.50" WEATHERSTRIPPING	FOAM	CRL
30		0.125" X 0.75" WINDOW LOCK CATCH	ASTM A36	CUSTOM
31		POLYURETHANE FOAM	FOAM	FOMO PRODUCTS
32		0.625" X 0.625" X 1.25" ASTM A36 ANCHOR BLOCK	ASTM A36	CUSTOM
33		0.125" X 1.25" FLATBAR GLASS TAB	ASTM A36	CUSTOM
34		0.125" X 1.25" GLASS PANEL SILL	ASTM A36	CUSTOM
35	995	DOW CORNING 995 SILICONE (GLAZING GLASS)	SILICONE	DOW CORNING
36	(A)	STRIKE	STEEL	ROCKWOOD
37		#6 X 1" PFH SELF-TAPPING SCREW	STEEL	

**A500, GRADE B OR A513

REV	DESCRIPTION	DATE	BY
D	PER MIAMI-DADE COMMENTS 7/01/09	12-03-09	SMC
C	PER MIAMI-DADE 5/20/09	06/24/09	SMC
B	PER MIAMI-DADE COMMENTS 01/29/09	01/18/09	SMC
A	PER MIAMI-DADE COMMENTS 01/04/09	01/12/09	SMC

VINTAGE IRONWORKS
987 JOSIANE COURT, SUITE 1064
ALTAMONTE SPRINGS, FLORIDA 32701

TITLE: STEEL INSWING DOORS W/ & W/O SIDELITES & TRANSOM COMPONENTS AND BILL OF MATERIALS

DRAWN BY: CB | DATE: 07/22/08
SCALE: N.T.S. | DRAWING NO: VIN0002
REV: D | SHEET: 13 OF 14

PREPARED BY:
PTC Product Design Group, LLC
P.O. Box 520775
Longwood, Florida 32752
Phone 321.690.1788
Fax 321.690.1789
Email: info@ptc-corp.com

Robert J. Amoruso P.E.
FL P.E. No. 49752

FBPE Certificate of Authorization NO. 25935

PRODUCT REVISED
as complying with the Florida Building Code
Acceptance No. 12-0604.03
Expiration Date 09/09/2014
By
Miami Dade Product Control

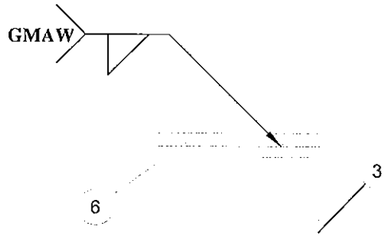

FIXED LITE / SIDELITE GLAZING FRAME WELDING DETAIL

D

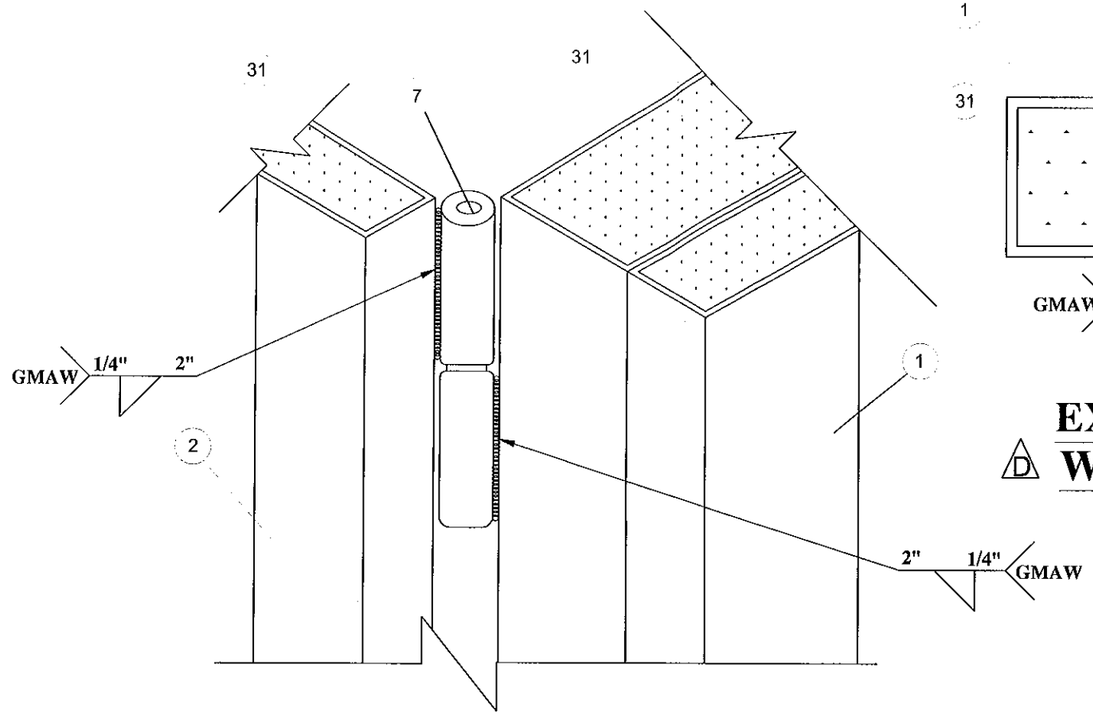

D **HINGE DETAIL**

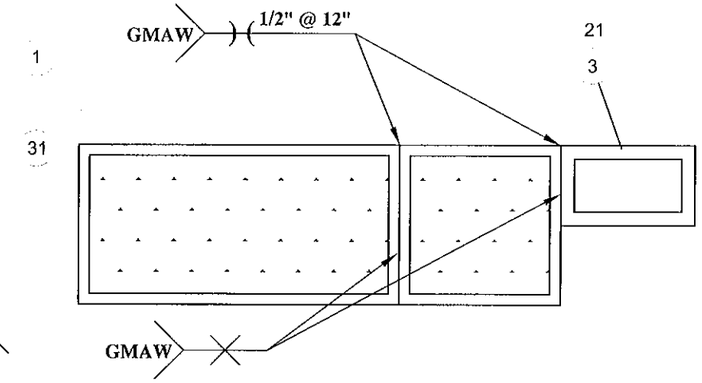

D **EXTERIOR FRAME WELDING DETAIL**

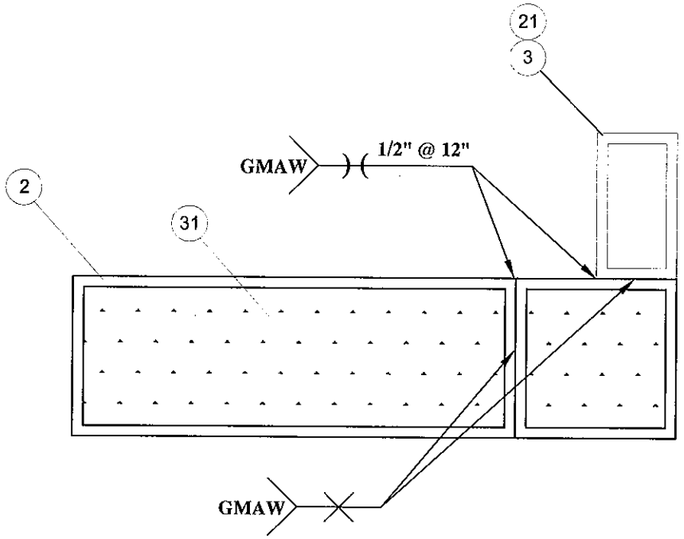

D **PANEL FRAME WELDING DETAIL**

D

TABLE 1

SOLID MIG WIRE: AWS ER70S-6 This is a copper coated, mild steel solid welding wire that is formulated with a high deoxidizer content to provide excellent welding performance with CO2 and argon rich shielding gasses.Ideal for short circuit transfer general fabrication welding. Produces an exceptionally smooth and stable arc with minimal spatter and offers good wetting characteristics that allow for uniform tie-in. It is a great choice for welding light to moderately scaled, oily or rusty plates. It can also be recommended for spay transfer arc welding applications.	**TYPICAL APPLICATIONS** Pressure vessels, pipe, shaft build up, tanks, farm implements, steel castings, auto body, collision repair and very thin sheet metal. Excellent choice when welding with wire feed speeds ranging from very slow to moderately fast. **Welding Positions** All Positions **Shielding Gas** CO2 or 75% Air / 25% CO2
Typical Wire Chemistry Carbon .09 Manganese 1.55 Silicon .84 Phoshorus .011 Sulfur .015 Copper .115	**Operating Range Amps** Wire Dia. / Amps .023" 35-70 .030" 50-100 .035" 100-150 .045" 150-200
Typical Mechanical Properties (AW): CO2 Tensile Strength (psf) 90,000 Yield Strength (psf) 73,000 Elongation % in 2" 25%	**Approvals and Conformances** AWS, A5.18, ER70S-6 *ASME SFA 5.18, F-6,A-1

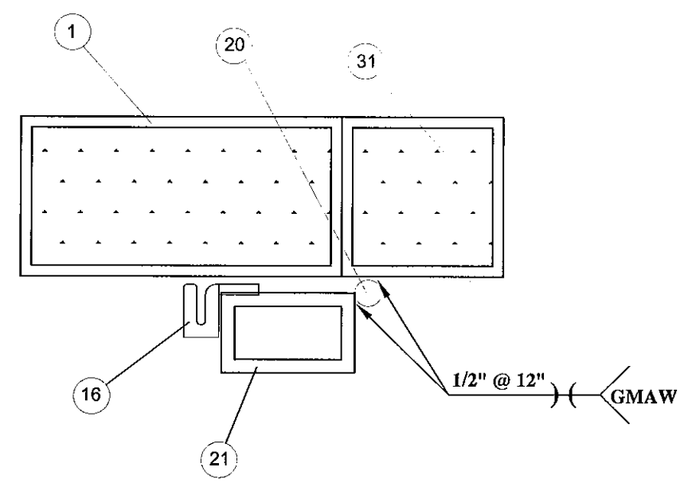

D **WEATHER STRIP SUPPORT / EXTERIOR FRAME WELDING DETAIL**

REV	DESCRIPTION	DATE	BY
D	PER MIAMI-DADE COMMENTS 7/01/09	07/15/09	SMC

PROJECT# 412-0304

VINTAGE IRONWORKS
987 JOSIANE COURT, SUITE 1064
ALTAMONTE SPRINGS, FLORIDA 32701

TITLE: STEEL INSWING DOORS W/ & W/O SIDELITES & TRANSOM WELDING SCHEDULE AND DETAILS

DRAWN BY: CB | DATE: 07/22/08
SCALE: N.T.S. | DRAWNING NO: VIN0002
REV: D | SHEET: 14 OF 14

PREPARED BY:
PTC Product Design Group, LLC
P.O. Box 520775
Longwood, Florida 32752
Phone: 321.690.1798
Fax: 321.690.1799
Email: info@ptc-corp.com

Robert J. Amoruso P.E.
FL P.E. No. 49752

FBPE Certificate of Authorization NO. 25935

PRODUCT REVISED
as complying with the Florida
Building Code
Acceptance No 12-0604.03
Expiration Date 07/01/2014
By
Miami Dade Product Control