MIAMI-DADE COUNTY
PRODUCT CONTROL SECTION
11805 SW 26 Street, Room 208
Miami, Florida 33175-2474
T (786) 315-2590 F (786) 315-2599
www.miamidade.gov/economy

DEPARTMENT OF REGULATORY AND ECONOMIC RESOURCES (RER)
BOARD AND CODE ADMINISTRATION DIVISION

NOTICE OF ACCEPTANCE (NOA)

Republic Doors and Frame, Inc.
155 Republic Drive
McKenzie, TN 38201

SCOPE:

This NOA is being issued under the applicable rules and regulations governing the use of construction materials. The documentation submitted has been reviewed and accepted by Miami-Dade County RER - Product Control Section to be used in Miami Dade County and other areas where allowed by the Authority Having Jurisdiction (AHJ).

This NOA shall not be valid after the expiration date stated below. The Miami-Dade County Product Control Section (In Miami Dade County) and/or the AHJ (in areas other than Miami Dade County) reserve the right to have this product or material tested for quality assurance purposes. If this product or material fails to perform in the accepted manner, the manufacturer will incur the expense of such testing and the AHJ may immediately revoke, modify, or suspend the use of such product or material within their jurisdiction. RER reserves the right to revoke this acceptance, if it is determined by Miami-Dade County Product Control Section that this product or material fails to meet the requirements of the applicable building code.

This product is approved as described herein, and has been designed to comply with the Florida Building Code, including the High Velocity Hurricane Zone.

DESCRIPTION: Series "DL418" Outswing Flush Commercial Steel 18 ga Doors w/ 16 ga Frames-Impact

APPROVAL DOCUMENT: Drawing No. **RDF-002 Rev E**, titled "DL418 Steel Flush Door", sheets 1 through 10 of 10, prepared by Building Drops, Inc., dated 11/19/08 and last revised on 09-20-12, signed and sealed by Hermes F. Norero, P. E. , bearing the Miami-Dade County Product Control Revision stamp with the Notice of Acceptance number and expiration date by the Miami-Dade County Product Control Section.

MISSILE IMPACT RATING: Large and Small Missile Impact Resistant

Limitations:

1. Existing construction: Bldg official to verify the existing frame meeting the frame material (sheet 1) and frame anchor installation thru pipe or channel and additional anchor per detail "W" per sheet 6 of this approval.
2. Series HCF2100 Precision (Stanley Security Solution) Rim Panic item #8F to be used with Precision HC822 mullion item #25 along with mullion reinforcement item #26 (For double doors application only).
3. Refer to Bill of materials & cross-sections for additional reinforcements at lock stiles, hinge stiles and jambs.

LABELING: Each unit shall bear a permanent label with the manufacturer's name or logo, city, state and series and following statement: "Miami-Dade County Product Control Approved", noted herein.

RENEWAL of this NOA shall be considered after a renewal application has been filed and there has been no change in the applicable building code negatively affecting the performance of this product.

TERMINATION of this NOA will occur after the expiration date or if there has been a revision or change in the materials, use, and/or manufacture of the product or process. Misuse of this NOA as an endorsement of any product, for sales, advertising or any other purposes shall automatically terminate this NOA. Failure to comply with any section of this NOA shall be cause for termination and removal of NOA.

ADVERTISEMENT: The NOA number preceded by the words Miami-Dade County, Florida, and followed by the expiration date may be displayed in advertising literature. If any portion of the NOA is displayed, then it shall be done in its entirety.

INSPECTION: A copy of this entire NOA shall be provided to the user by the manufacturer or its distributors and shall be available for inspection at the job site at the request of the Building Official.

This NOA **revises NOA # 09-1210.01 (Former Winsor Republic Door, Inc.)** and consists of this page 1 and evidence pages E-1, as well as approval document mentioned above.

The submitted documentation was reviewed by **Ishaq I. Chanda, P.E.**

MIAMI-DADE COUNTY APPROVED

9/28/12

NOA No. 12-0604.12
Expiration Date: February 03, 2015
Approval Date: September 27, 2012

NOTICE OF ACCEPTANCE: EVIDENCE SUBMITTED

A. DRAWINGS

1. Manufacturer's die drawings and sections (submitted under file # **09-1210.01**)
2. Drawing No. **RDF-002 Rev E**, titled "DL418 Steel Flush Door", sheets 1 through 10 of 10, prepared by Building Drops, Inc., dated 11/19/08 and last revised on 09-20-12, signed and sealed by Hermes F. Norero, P.E.

Note: This revision consists of FBC 2010 notes only.

B. TESTS (submitted under file # **09-1210.01)**

1. Test reports on: 1) Air Infiltration Test, per FBC, TAS 202-94
   2) Uniform Static Air Pressure Test, Loading per FBC TAS 202-94
   3) Water Resistance Test per FBC TAS 202-94 (Not Performed).
   4) Large Missile Impact Test per FBC, TAS 201-94
   5) Cyclic Wind Pressure Loading per FBC, TAS 203-94
   6) Forced Entry Test, per FBC 2411 3.2.1, TAS 202-94

Along with marked-up drawings and installation diagram of Double Outswing Flush Commercial Steel Doors, prepared by Intertek Testing services., Test Report No. **3058531,** dated February 24, 2005 (This test report was last revised on 04/09/07) , signed and sealed by Leo Schlimgen, P. E.

2. Additional reference Intertek test report # **3080611**, dated **01/19/06** per TAS 201, 202 & 203, signed & sealed by Rick Curkeet, P.E.

C. CALCULATIONS

1. Anchor verification calculations, complying with FBC-2010 dated 05-25-12, prepared by Building Drops, Inc., signed and sealed by Hermes F. Norero, P.E.
2. Anchor verification calculations complying w/ FBC 2007, dated 03/30/09, 10/12/09, 11/29/09 and last revised on 01/06/2010, prepared by CertWorks Inc., signed and sealed by Kristina S. Daugherty, P.E. (submitted under file # **09-1210.01**)

D. QUALITY ASSURANCE

1. Miami Dade Department of Regulatory and Economic Resources (RER).

E. MATERIAL CERTIFICATIONS

1. Tensile test report prepared by prepared by Intertek Testing Services, Test Report No. **3058531,** tested per ASTM E8, dated 12/27/04 signed and sealed by Leo Schlimgen, P. E.

F. STATEMENTS

1. Statesman letter of conformance to FBC 2010 and "No financial interest", dated 03/28/12, signed and sealed by Hermes F. Norero, P. E.
2. Statesman letter of conformance to FBC 2007 and "No financial interest", dated 03/30/09, signed and sealed by Kristina S. Daugherty, P. E. (submitted under file # **09-0604.12**)
3. Lab compliance as part of the above referenced test reports.
4. Statement of Name change, dated July 25, 2012 by Republic Doors & Frames, signed by Steven Hugueley, Senior Engineer Republic Doors
5. Amendment of Article **# 201124900304,** dated 09/02/11 issued by State of Ohio to Republic Doors & Frame, Inc., signed by John Husted, Ohio secretary of State.
6. Amendment of Article **# 2000422000488,** dated 01/13/04 issued by State of Ohio to Winsor Republic Door Inc., signed by J. Kenneth Blackwell, Ohio secretary of State.

G. OTHER

1. This NOA **revises** # **09-1210.01(Former Winsor Republic Door)**, expiring on FEB 03, 2015.

Ishaq I. Chanda

Ishaq I. Chanda, P.E.
Product Control Examiner
NOA No. 12-0604.12
Expiration Date: February 03, 2015
Approval Date: September 27, 2012

REPUBLIC DOORS AND FRAMES

DL418 STEEL FLUSH DOOR

INSTALLATION NOTES:

1. *ONE (1)* INSTALLATION ANCHOR IS REQUIRED AT EACH ANCHOR LOCATION SHOWN, UNLESS OTHERWISE STATED.

2. THE NUMBER OF INSTALLATION ANCHORS DEPICTED IS THE MINIMUM NUMBER OF ANCHORS TO BE USED FOR PRODUCT INSTALLATION.

3. *INSTALL INDIVIDUAL INSTALLATION ANCHORS WITHIN A TOLERANCE OF ±1/16 INCH OF THE DEPICTED LOCATION IN THE ANCHOR LAYOUT DETAIL (I.E., WITHOUT CONSIDERATION OF TOLERANCES). TOLERANCES ARE NOT CUMULATIVE FROM ONE INSTALLATION ANCHOR TO THE NEXT.*

4. *FOR INSTALLATION INFORMATION AND ANCHOR LAYOUTS ON JAMBS AND SILL, REFER TO SHEET 6.*

5. MINIMUM EMBEDMENT AND EDGE DISTANCE EXCLUDE WALL FINISHES, INCLUDING BUT NOT LIMITED TO STUCCO, FOAM, BRICK VENEER, AND SIDING.

6. INSTALLATION ANCHORS AND ASSOCIATED HARDWARE MUST BE MADE OF CORROSION RESISTANT MATERIAL OR HAVE A CORROSION RESISTANT COATING.

7. FOR GROUT FILLED BLOCK, DO NOT INSTALL INSTALLATION ANCHORS INTO MORTAR JOINTS. EDGE DISTANCE IS MEASURED FROM FREE EDGE OF BLOCK OR EDGE OF MORTAR JOINT INTO FACE SHELL OF BLOCK.

8. INSTALLATION ANCHORS SHALL BE INSTALLED IN ACCORDANCE WITH ANCHOR MANUFACTURER'S INSTALLATION INSTRUCTIONS, AND ANCHORS SHALL NOT BE USED IN SUBSTRATES WITH STRENGTHS LESS THAN THE MINIMUM STRENGTH SPECIFIED BY THE ANCHOR MANUFACTURER.

9. INSTALLATION ANCHOR CAPACITIES FOR PRODUCTS HEREIN ARE BASED ON SUBSTRATE MATERIALS WITH THE FOLLOWING PROPERTIES:
   A. WOOD - MINIMUM SPECIFIC GRAVITY OF *0.55*.
   B. CONCRETE -MINIMUM COMPRESSIVE STRENGTH OF *2700 PSI*.
   C. GROUT-FILLED CMU - UNIT STRENGTH CONFORMS TO ASTM C-90 & GROUT CONFORMS TO ASTM C 476. GROUT SHALL HAVE MINIMUM COMPRESSIVE STRENGTH OF 2000 PSI. SEE FBC SECTION 2105.2.2.1.2 (3) FOR GROUTED MASONRY REQUIREMENTS.

GENERAL NOTES:

1. THE PRODUCT SHOWN HEREIN IS DESIGNED AND MANUFACTURED TO COMPLY WITH THE 2010 FLORIDA BUILDING CODE, INCLUDING HVHZ.
   - *TAS 201-94*
   - *TAS 202-94*
   - *TAS 203-94*

2. ADEQUACY OF THE EXISTING STRUCTURAL CONCRETE/MASONRY, 2X AND STEEL STUD FRAMING AS A MAIN WIND FORCE RESISTING SYSTEM CAPABLE OF WITHSTANDING AND TRANSFERRING APPLIED PRODUCT LOADS TO THE FOUNDATION IS THE RESPONSIBILITY OF THE ENGINEER OR ARCHITECT OF RECORD FOR THE PROJECT OF INSTALLATION.

3. 1X OR 2X BUCKS (WHEN USED) SHALL BE DESIGNED AND ANCHORED TO PROPERLY TRANSFER ALL LOADS TO THE STRUCTURE. BUCK DESIGN AND INSTALLATION IS THE RESPONSIBILITY OF THE ENGINEER OR ARCHITECT OF RECORD FOR THE PROJECT OF INSTALLATION.

4. THE INSTALLATION DETAILS DESCRIBED HEREIN ARE GENERIC AND MAY NOT REFLECT ACTUAL CONDITIONS FOR A SPECIFIC SITE. IF SITE CONDITIONS CAUSE INSTALLATION TO DEVIATE
   FROM THE REQUIREMENTS DETAILED HEREIN, A LICENSED ENGINEER OR ARCHITECT SHALL PREPARE SITE SPECIFIC DOCUMENTS FOR USE WITH THIS DOCUMENT FOR NON-HVHZ AREA. FOR HVHZ AREAS, ONE TIME PRODUCT APPROVAL TO BE OBTAINED FROM MIAMI-DADE PERA OR AUTHORITY HAVING JURISDICTION (AHJ).

5. APPROVED IMPACT PROTECTIVE SYSTEM **IS NOT REQUIRED** TO PROTECT THIS PRODUCT IN AREAS REQUIRING IMPACT RESISTANCE.

6. FRAME MATERIAL: *STEEL 16 GA. (0.053") MIN.*
   FY MIN. 45.7 KSI

7. DOOR MATERIAL: *STEEL 18 GA. (0.045") MIN.*
   FY MIN. 43.9 KSI

8. *DESIGNATIONS "X" STANDS FOR THE FOLLOWING:*
   X: OPERABLE PANEL

9. STEEL COMPONENTS SHALL BE COATED OR PROVIDED WITH CORROSION RESISTANCE PROTECTION IN CONFORMANCE WITH THE MATERIAL PROTECTION PROVISIONS OF FBC SECTION 2220.

STEEL DOOR CONSTRUCTION:

THE OVERALL PANEL THICKNESS IS 1 3/4 INCH THICK. THE DOOR PANEL HINGE AND LOCK CHANNELS ARE 0.620" LEG X 1.677" WIDE X 0.062" LEG X 94.875" AND ARE CONSTRUCTED FROM 16 GAUGE (0.053") COLD-ROLLED STEEL. THE DOOR TOP AND BOTTOM END CHANNELS ARE 0.620" LEG X 1.677"WIDE X 0.62"LEG X 47.563" AND ARE CONSTRUCTED FROM 16 GAUGE (0.053") COLD-ROLLED STEEL. THE DOOR SKINS / FACE SHEETS ARE CONSTRUCTED OF **18 GAUGE** (0.045") COLD-ROLLED STEEL AND ATTACHED TO THE END, HINGE AND LOCK CHANNELS. THE DOOR CORE IS CONSTRUCTED OF TYPE 99-0-3/4 KRAFT PAPER HONEYCOMB CORE AND ATTACHED TO THE FACES WITH GLUE. THE DOOR HINGE REINFORCEMENTS ARE 1.375" WIDE X 4.5" LONG X 0.132" THICK AND ARE CONSTRUCTED FROM 9 GAUGE (0.132") COLD-ROLLED STEEL. THE MORTISE DOOR LOCK REINFORCEMENTS ARE 1.677" X 6" X 14" AND ARE CONSTRUCTED FROM 14 GAUGE (0.067") FORMED STEEL. THE SURFACE BOLT REINFORCEMENTS ARE 1.677" X 6" X 18" AND ARE CONSTRUCTED FROM 12 GAUGE (0.101") FORMED STEEL. THE RIM EXIT REINFORCEMENTS ARE 1.677" X 6" X 14" AND ARE CONSTRUCTED FROM 14 GAUGE (0.067") FORMED STEEL. THE SVR LOCK REINFORCEMENTS ARE 1.677" X 6" X 93.625" AND ARE CONSTRUCTED FROM 12 GAUGE (0.101") FORMED STEEL. THE CLOSER REINFORCEMENTS ARE 1.677" X 6" X 18" AND ARE CONSTRUCTED FROM 12 GAUGE (0.101") FORMED STEEL. THE DEAD LOCK REINFORCEMENTS ARE 3" X 2.5" AND ARE CONSTRUCTED FROM 16 GAUGE (0.053") FORMED STEEL. THE CYLINDRICAL LOCK REINFORCEMENTS ARE 3" X 2.5" AND ARE CONSTRUCTED FROM 16 GAUGE (0.053") FORMED STEEL. THE DOOR SURFACE BOLTS ARE IVES MODEL 360 SURFACE BOLTS LOCATED AT THE TOP AND BOTTOM MEETING EDGE CORNER OF THE INACTIVE LEAF.

FRAME CONSTRUCTION:

THE DOOR FRAMES ARE CONSTRUCTED FROM 16 GAUGE (0.053") COLD-ROLLED STEEL. THE CORNERS ARE MITERED KNOCK DOWN MECHANICALLY FASTENED. THE DOOR FRAME SECTIONS ARE T-SHAPED. THE DOOR FRAME CORNER REINFORCEMENTS ARE KNOCK DOWN WITH CORNER KEY. THE DOOR FRAME HINGES ARE S. PARKER 4.5" X 4.5" X 0.134" FULL MORTISE BUTT-TYPE STANDARD WEIGHT HINGES. THE DOOR FRAME HINGE REINFORCEMENTS ARE 1.625" WIDE X 7.50" LONG AND ARE CONSTRUCTED OF 9 GAUGE (0.132" MIN.) COLD-ROLLED STEEL. THE DOOR FRAME HEADER SLEEVE REINFORCEMENTS ARE 5.6875" X 96" AND ARE CONSTRUCTED OF 14 GAUGE (0.067") FORMED STEEL. THE DOOR FRAME BASE ANCHORS ARE 1.875" X 1.875" AND ARE CONSTRUCTED OF 16 GAUGE (0.053") FORMED STEEL. THE DOORFRAME MULLION REINFORCEMENTS ARE 5/8" BAR STOCK 4.0" X 1.5". THE DOORFRAME SURFACE BOLT REINFORCEMENTS ARE 1.5" X 1.5" 3 GAUGE STEEL ANGLES.

TABLE OF CONTENTS

SHEET	REVISION	SHEET DESCRIPTION
1	E	INSTALLATION & GENERAL NOTES
2	D	SURFACE VERTICAL ROD ELEVATIONS & DETAILS
3	E	RIM EXIT DEVICE ELEVATIONS & DETAILS
4	C	CYLINDRICAL W/ DEADLOCK ELEVATIONS & DETAILS
5	C	MORTISE LOCK ELEVATIONS & DETAILS
6	E	ANCHOR LAYOUT
7	C	VERTICAL SECTIONS
8	E	HORIZONTAL SECTIONS
9	C	CORNER ASSEMBLIES & COMPONENTS
10	D	BILL OF MATERIALS & COMPONENTS

DESIGN PRESSURE RATING

DESIGN PRESSURE ALL SIZES		MISSILE IMPACT RATING
+60/-60 PSF	W/O WATER INFILTRATION	SMALL & LARGE MISSILE IMPACT RATED

PRODUCT REVISED
in complying with the Florida Building Code
Application No. 12-0604.12
Expiration Date FEB 03 2015
Shaq L. Chandler
Miami-Dade County

Republic doors · frames
155 REPUBLIC DRIVE
MCKENZIE, TN 38201
PH: (800) 799-3667 FX: (731) 352-2556

TITLE: DL418 STEEL FLUSH DOOR
INSTALLATION & GENERAL NOTES

PREPARED BY:
BUILDING DROPS, INC.
127 W. FAIRBANKS AVE., STE. 438
WINTER PARK, FL 32789
PH: (407) 644-6957 FX: (407) 644-2366

REVISIONS

NO.	DESCRIPTION	BY	DATE
C	COMMENTS PER MIAMI-DADE CO.	KSD	11.20.09
D	COMMENTS PER MIAMI-DADE CO.	HFN	01.05.10
E	2010 FBC UPDATES	MS	03.28.12

HERMES F. NORERO, P.E.
FLORIDA P.E. LIC. NO. 73776
127 W. FAIRBANKS AVE., STE. 438
WINTER PARK, FL 32789
FBPE CERT. OF AUTHORIZATION NO. 29576

9-20-2012

DATE: 11.19.08
DWN BY: JLR
CHK BY: HN
SCALE: NTS
DWG #: RDF002
SHEET: 1 OF 10

s:\projects\republic doors\rnd-12-0227.1.2.3 (rnd - 2010 fbc code change)\rna 09-1210.01\dwge\rdf002 republic dl418.dwg 9/20/2012 12:52 PM

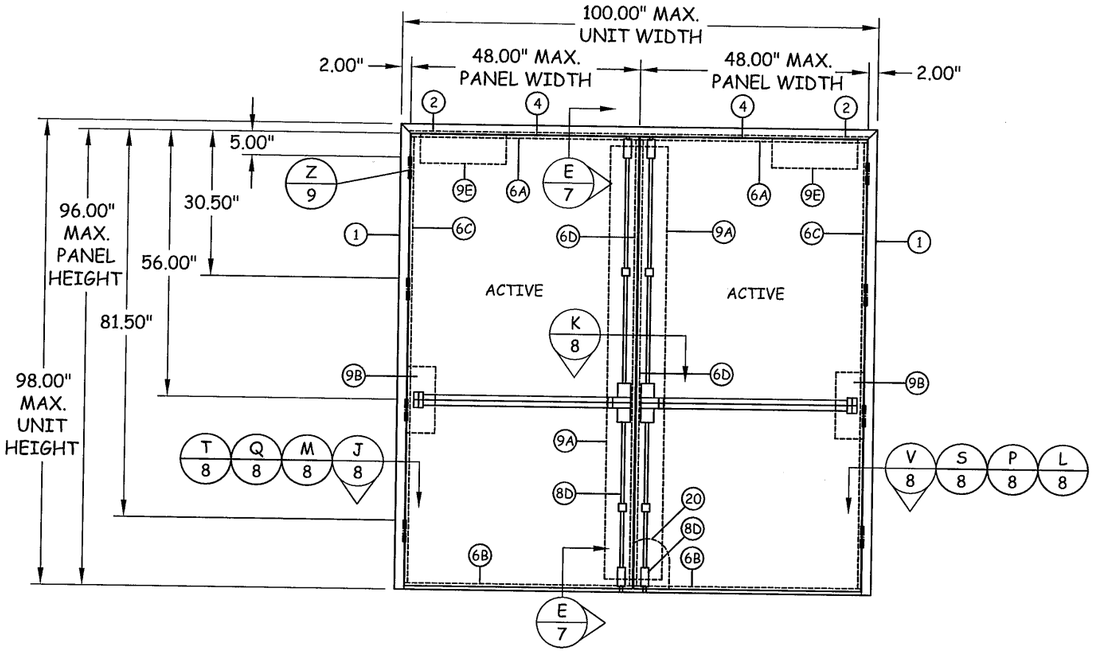

ELEVATION DOUBLE

SURFACE VERTICAL ROD

(OUTSWING DOOR - INTERIOR VIEW)

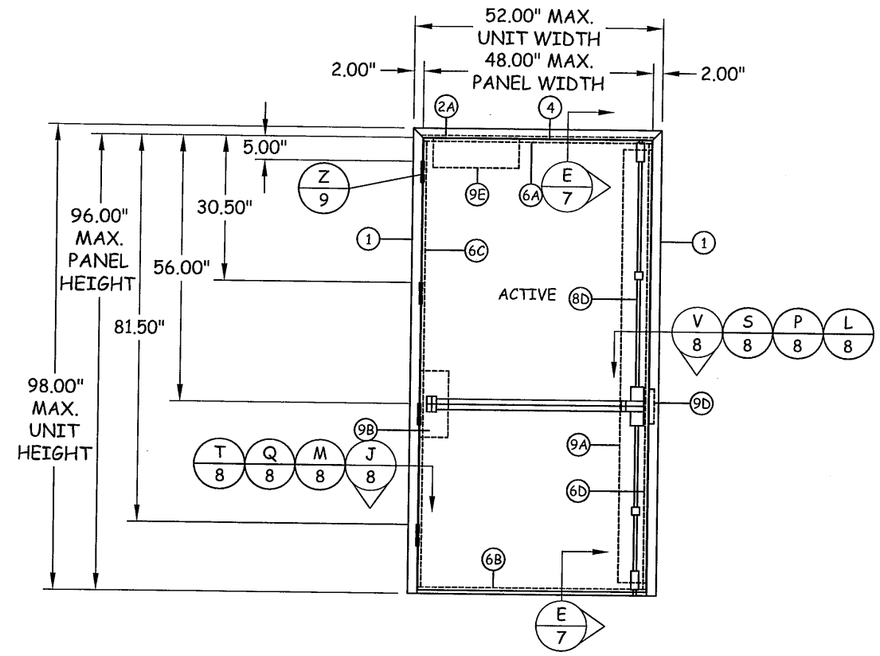

ELEVATION SINGLE

SURFACE VERTICAL ROD

(OUTSWING DOOR - INTERIOR VIEW)

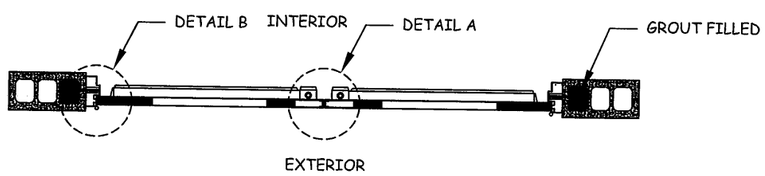

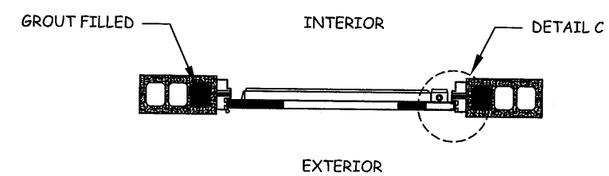

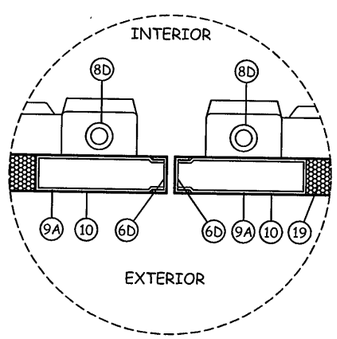

DETAIL A

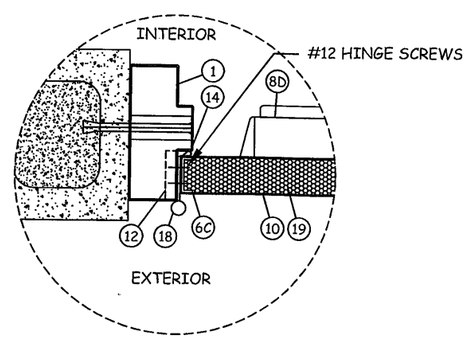

DETAIL B

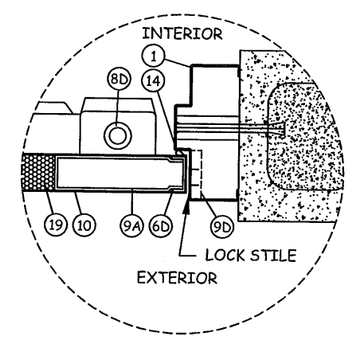

DETAIL C

PRODUCT REVISED
as complying with the Florida
Building Code
Acceptance No. 12-0604.12
Expiration Date 2/3/15
By Ishaq I. Chand
Miami Dade Product Control

Republic doors·frames
155 REPUBLIC DRIVE
MCKENZIE, TN 38201
PH: (800) 799-3667 FX: (731) 352-2556

TITLE:
DL418 STEEL FLUSH DOOR
SURFACE VERTICAL ROD
ELEVATIONS & DETAILS

PREPARED BY:
BUILDING DROPS, INC.
127 W. FAIRBANKS AVE., STE. 438
WINTER PARK, FL 32789
PH: (407) 644-6957 FX: (407) 644-2366

REVISIONS

NO.	DESCRIPTION	BY	DATE
A	COMMENTS PER MIAMI-DADE CO.	JLR	06.02.09
B	COMMENTS PER MIAMI-DADE CO.	JLR	10.12.09
C	COMMENTS PER MIAMI-DADE CO.	KSD	11.20.09
D	2010 FBC UPDATES	MS	03.28.12

9-20-2012
HERMES F. NOPERO, P.E.
FLORIDA P. E. NO. 33778
127 W. FAIRBANKS AVE., STE. 438
WINTER PARK, FL 32789
FBPE CERT. OF AUTHORIZATION NO. 29578

DATE: 11.19.08
DWN BY: JLR
CHK BY: HN
SCALE: NTS

DWG #: RDF002

SHEET: 2 OF 10

s:\projects\republic doors\md-12-0227.1.2.3 (md - 2010 fbc code change)\noa 09-1210.01\dwgs\rdf002 republic dl418.dwg 9/20/2012 12:52 PM

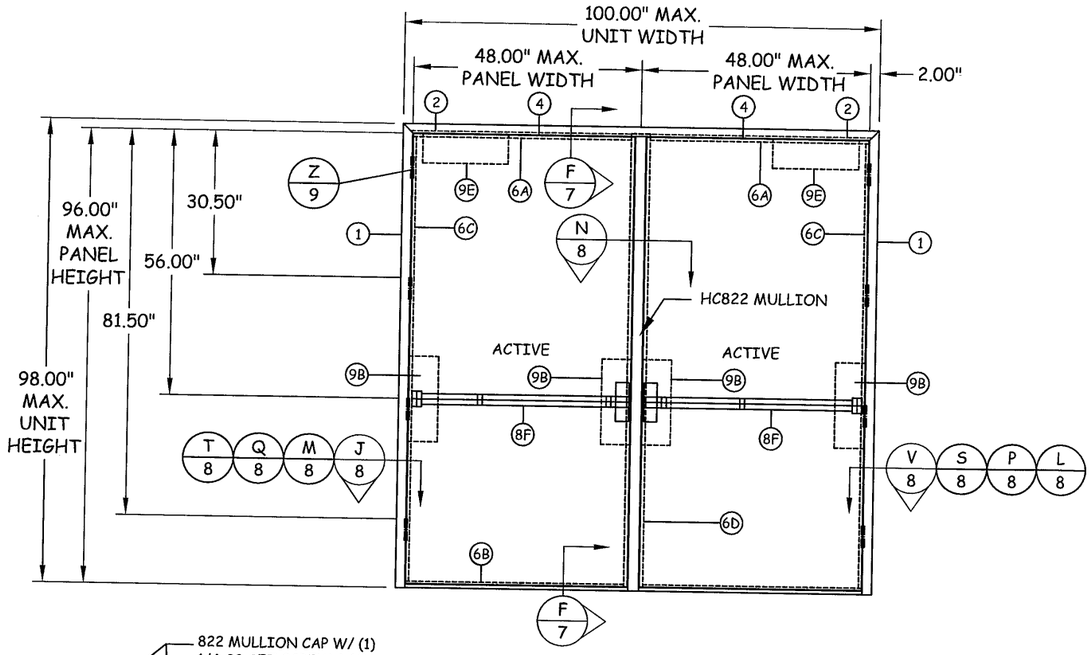

ELEVATION DOUBLE

HCF 2100 RIM EXIT DEVICE W/ HC822 MULLION

(OUTSWING DOOR - INTERIOR VIEW)

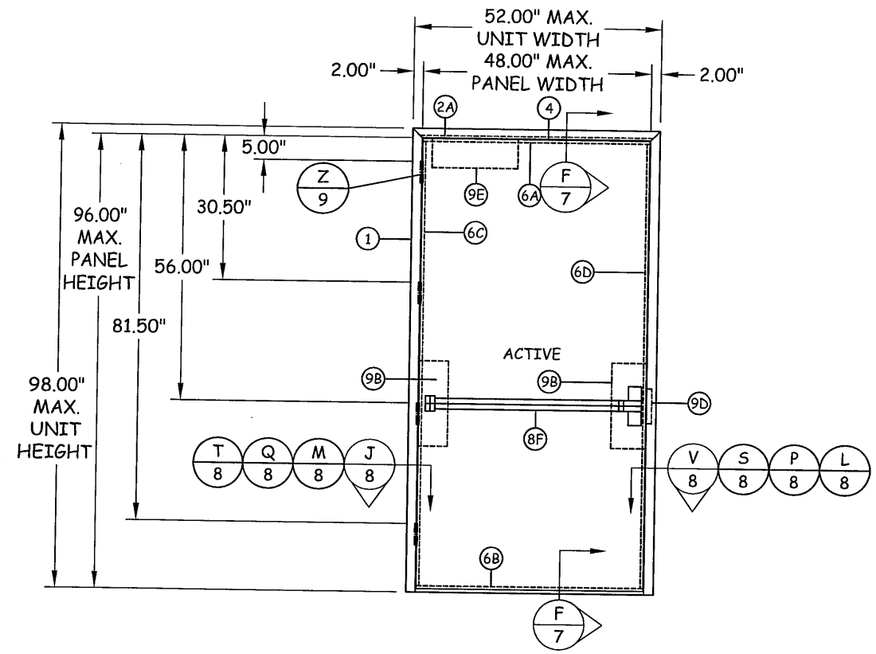

ELEVATION SINGLE

RIM EXIT DEVICE

(OUTSWING DOOR - INTERIOR VIEW)

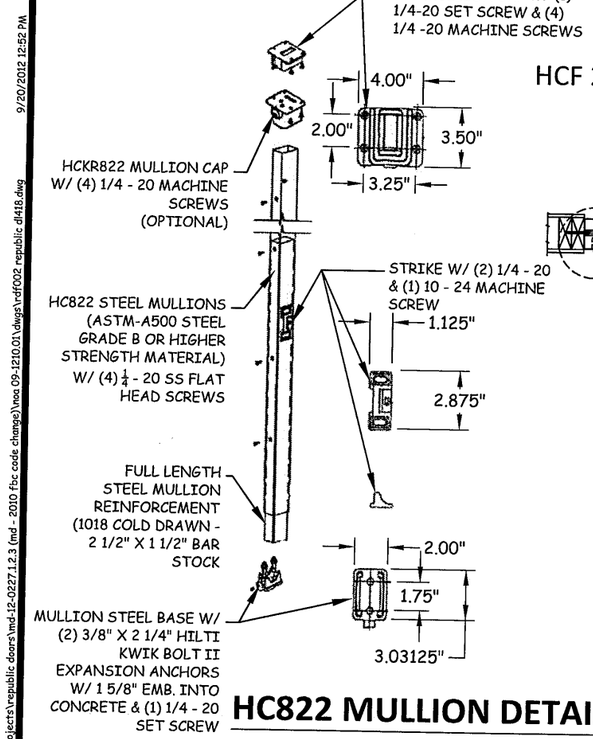

HC822 MULLION DETAIL

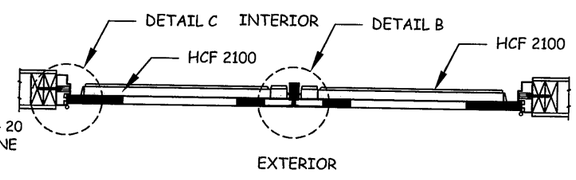

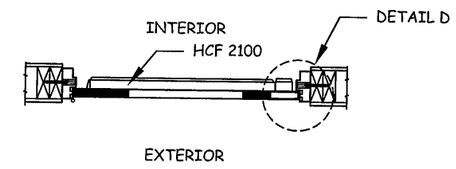

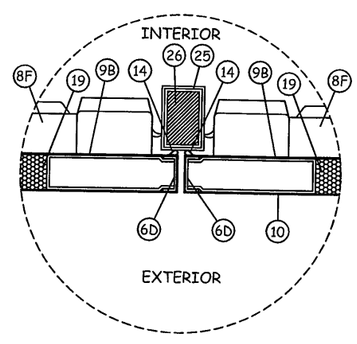

DETAIL B

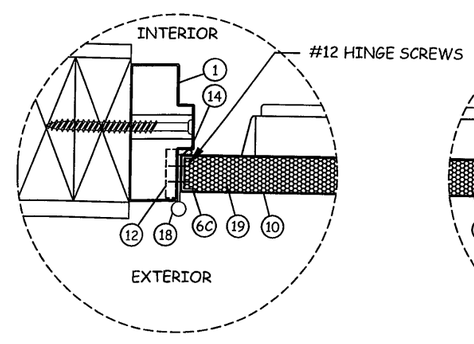

DETAIL C

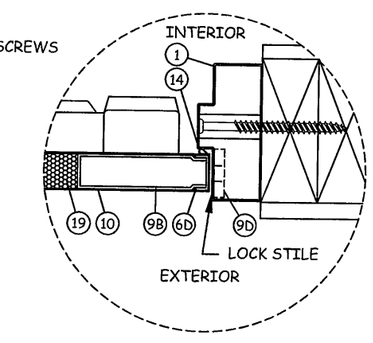

DETAIL D

PRODUCT REVISED
in complying with the Florida Building Code
Application No. 12-0604.12
Expiration Date 2/3/15
By [illegible]
Miami-Dade Product Control

Republic doors · frames
155 REPUBLIC DRIVE
MCKENZIE, TN 38201
PH: (800) 799-3667 FX: (731) 352-2556

TITLE: DL418 STEEL FLUSH DOOR
RIM EXIT DEVICE ELEVATIONS & DETAILS

PREPARED BY:
BUILDING DROPS, INC.
127 W. FAIRBANKS AVE., STE. 438
WINTER PARK, FL 32789
PH: (407) 644-6957 FX: (407) 644-2366

REVISIONS

NO.	DESCRIPTION	BY	DATE
C	COMMENTS PER MIAMI-DADE CO.	KSD	11.20.09
D	COMMENTS PER MIAMI-DADE CO.	HFN	01.05.10
E	2010 FBC UPDATES	MS	03.28.12

HERMES F. NORERO, P.E.
LIC. NO. 73776
127 W. FAIRBANKS AVE. STE. 438
WINTER PARK, FL 32789
FBPE CERT. OF AUTHORIZATION NO. 29578

DATE: 11.19.08	DWN BY: JLR	CHK BY: HN	SCALE: NTS

DWG #: RDF002

SHEET: 3 OF 10

s:\projects\republic doors\md-12-0227.1.2.3 (md - 2010 fbc code change)\roo 09-1210.01\dwgs\rdf002 republic df418.dwg 9/20/2012 12:52 PM

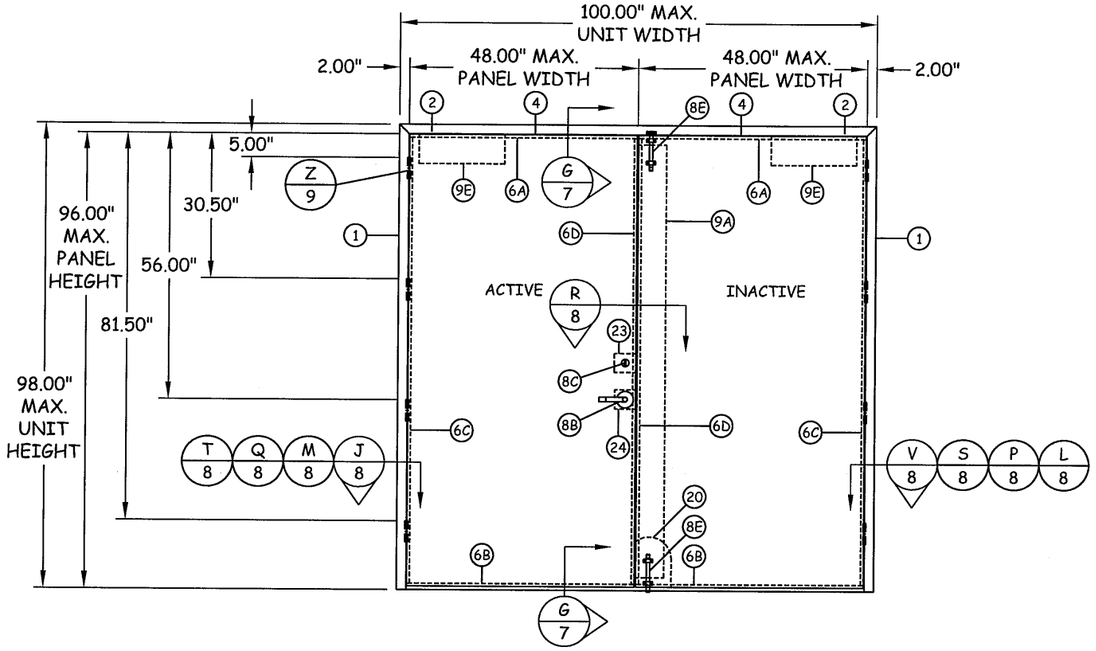

ELEVATION DOUBLE

CYLINDRICAL LOCK WITH DEADLOCK

(OUTSWING DOOR - INTERIOR VIEW)

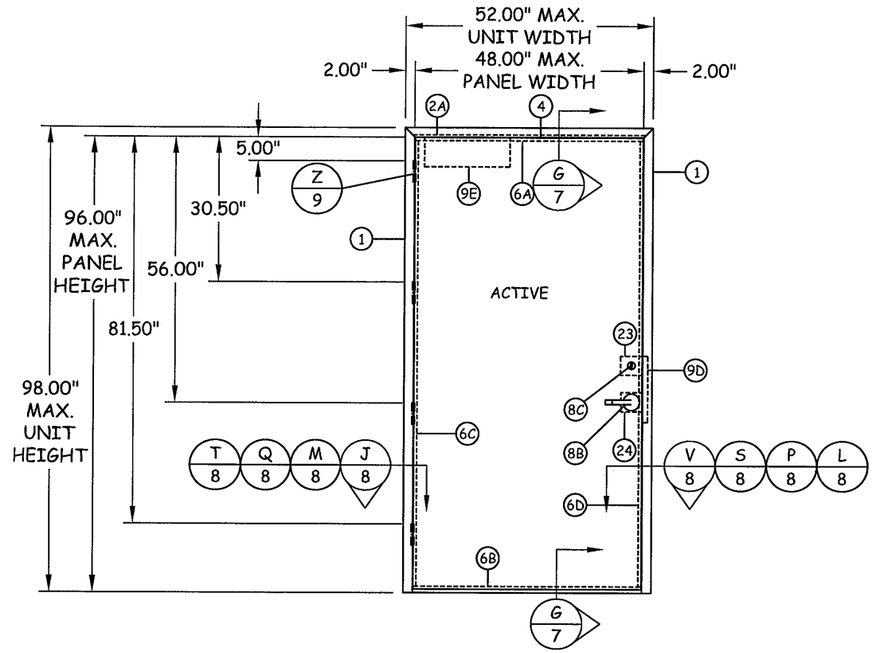

ELEVATION SINGLE

CYLINDRICAL LOCK WITH DEADBOLT

(OUTSWING DOOR - INTERIOR VIEW)

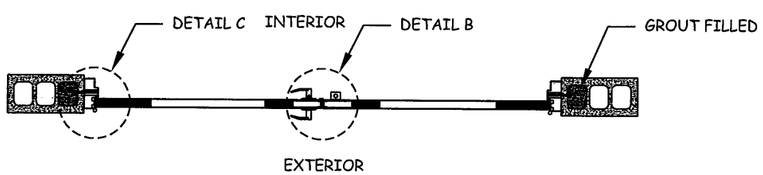

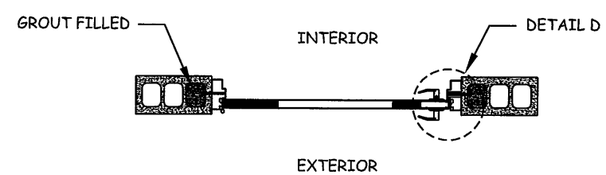

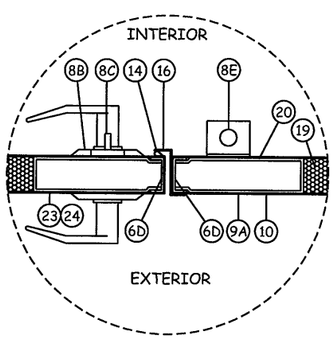

DETAIL B

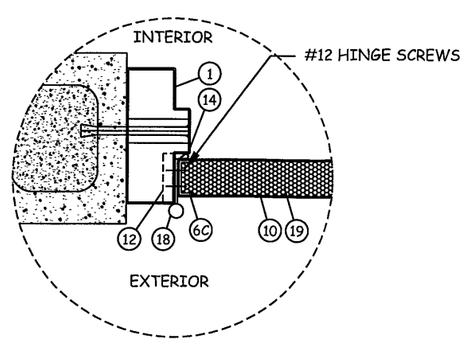

DETAIL C

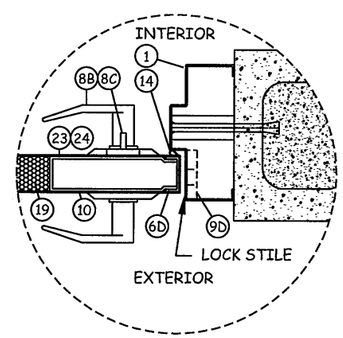

DETAIL D

PRODUCT REVISED
as complying with the Florida Building Code
Acceptance No. 12-0604.12
Expiration Date 2/3/15
By Ishaq I. Chunde
Miami Dade Product Control

Republic doors·frames
155 REPUBLIC DRIVE
MCKENZIE, TN 38201
PH: (800) 799-3667 FX: (731) 352-2556

TITLE:
DL418 STEEL FLUSH DOOR
CYLINDRICAL W/ DEADLOCK
ELEVATIONS & DETAILS

PREPARED BY:
BUILDING DROPS, INC.
127 W. FAIRBANKS AVE., STE. 438
WINTER PARK, FL 32789
PH: (407) 644-6957 FX: (407) 644-2366

REVISIONS

NO.	DESCRIPTION	BY	DATE
A	COMMENTS PER MIAMI-DADE CO.	JLR	06.02.09
B	COMMENTS PER MIAMI-DADE CO.	JLR	10.12.09
C	2010 FBC UPDATES	MS	03.28.12

HERMES F. NORERO, P.E.
FLORIDA P.E. NO. 73778
127 W. FAIRBANKS AVE., STE. 438
WINTER PARK, FL 32789
FBPE CERT. OF AUTHORIZATION NO. 29578

DATE: 11.19.08
DWN BY: JLR
CHK BY: HN
SCALE: NTS

DWG #: RDF002

SHEET: 4 OF 10

s:\projects\republic doors\md-12-0227.1.2.3 (md - 2010 fbc code change)\noa 09-1210.01\dwgs\rdf002 republic dl418.dwg 9/20/2012 1:59 PM

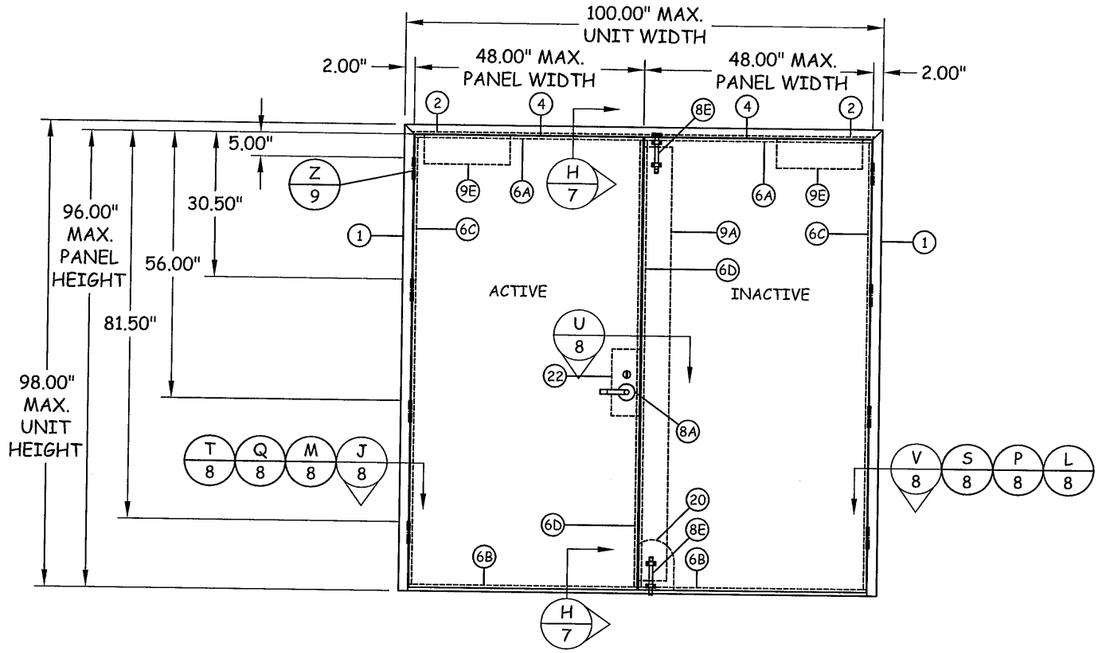

ELEVATION DOUBLE

MORTISE LOCK WITH DEADLOCK

(OUTSWING DOOR - INTERIOR VIEW)

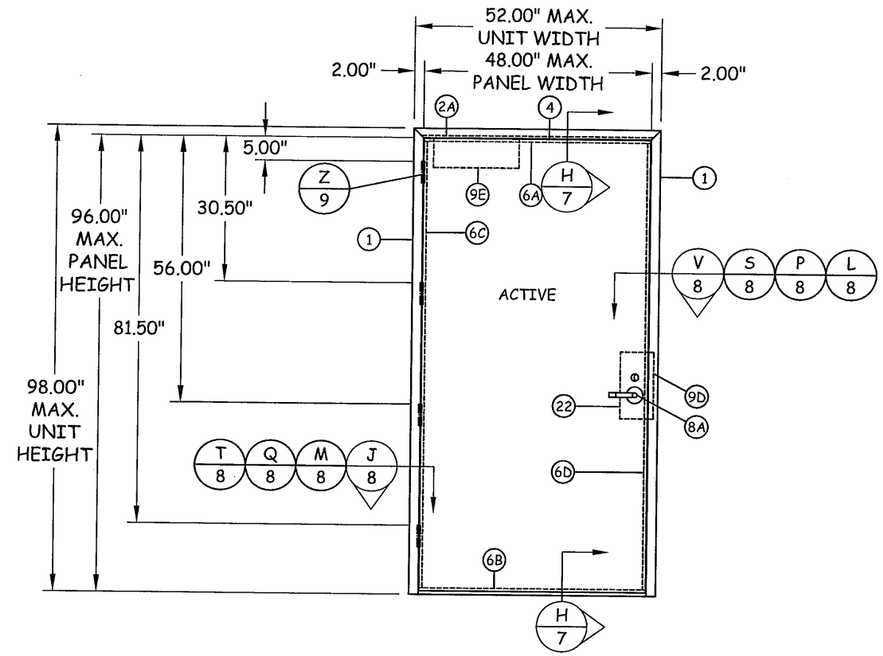

ELEVATION SINGLE

MORTISE LOCK WITH DEADLOCK

(OUTSWING DOOR - INTERIOR VIEW)

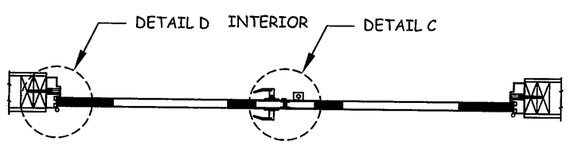

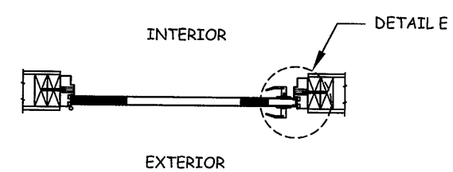

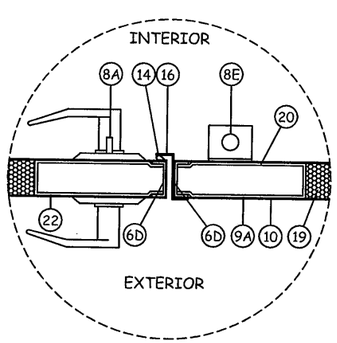

DETAIL C

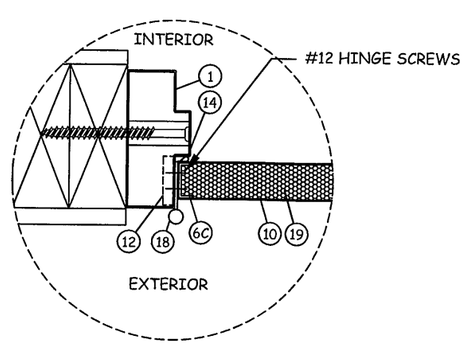

DETAIL D

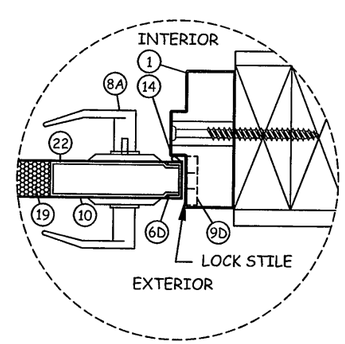

DETAIL E

PRODUCT REVISED
in complying with the Florida Building Code
Acceptance No 12-0604.12
Expiration Date 2/3/15
By Ichung I. Chan
Miami-Dade Product Control

Republic doors·frames

155 REPUBLIC DRIVE
MCKENZIE, TN 38201
PH: (800) 799-3667 FX: (731) 352-2556

TITLE: DL418 STEEL FLUSH DOOR
MORTISE LOCK EEVATIONS & DETAILS

PREPARED BY:
BUILDING DROPS, INC.
127 W. FAIRBANKS AVE., STE. 438
WINTER PARK, FL 32789
PH: (407) 644-6957 FX: (407) 644-2366

REVISIONS

NO.	DESCRIPTION	BY	DATE
A	COMMENTS PER MIAMI-DADE CO.	JLR	06.02.09
B	COMMENTS PER MIAMI-DADE CO.	JLR	10.12.09
C	2010 FBC UPDATES	MS	03.28.12

9-20-2012
HERMES F. NORERO, P.E.
FLORIDA P.E. NO. 35778
127 W. FAIRBANKS AVE. STE. 438
WINTER PARK, FL 32789
FBPE CERT. OF AUTHORIZATION NO. 29578

DATE: 09.01.09
DWN BY: JLR
CHK BY: HN
SCALE: NTS

DWG #: RDF002

SHEET: 5 OF 10

9/20/2012 12:52 PM
e:\projects\republic doors\md-12-0227.1.2.3 (md - 2010 fbc code change)\noa 09-1210.01\dwgs\rdf002 republic df418.dwg

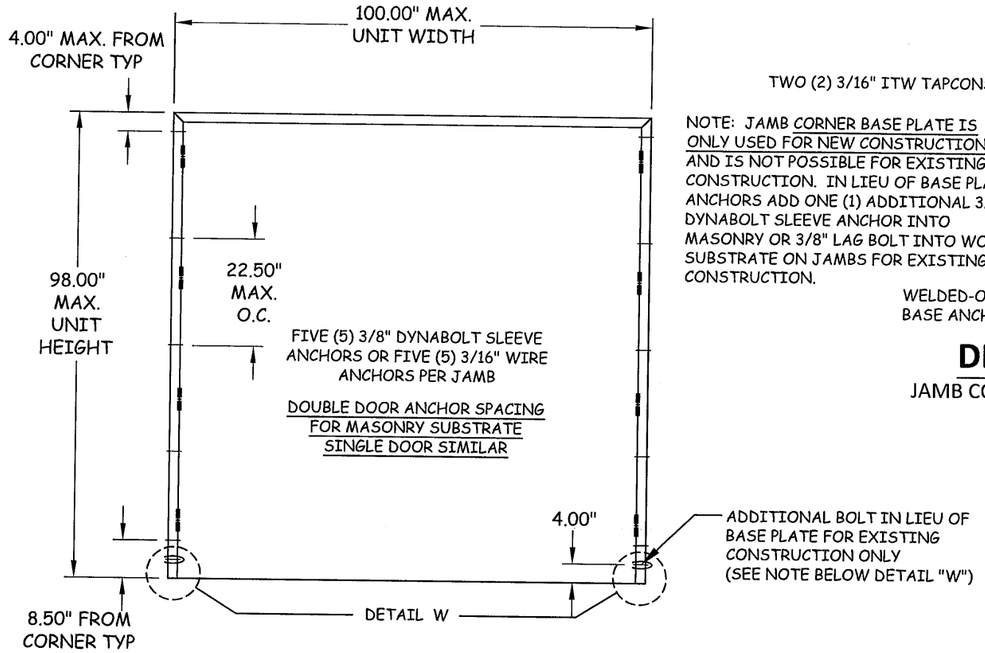

NOTE: JAMB CORNER BASE PLATE IS ONLY USED FOR NEW CONSTRUCTION AND IS NOT POSSIBLE FOR EXISTING CONSTRUCTION. IN LIEU OF BASE PLATE ANCHORS ADD ONE (1) ADDITIONAL 3/8" DYNABOLT SLEEVE ANCHOR INTO MASONRY OR 3/8" LAG BOLT INTO WOOD SUBSTRATE ON JAMBS FOR EXISTING CONSTRUCTION.

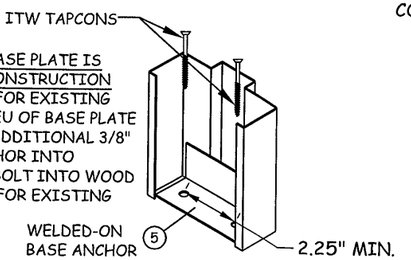

DETAIL W

JAMB CORNER BASE PLATE

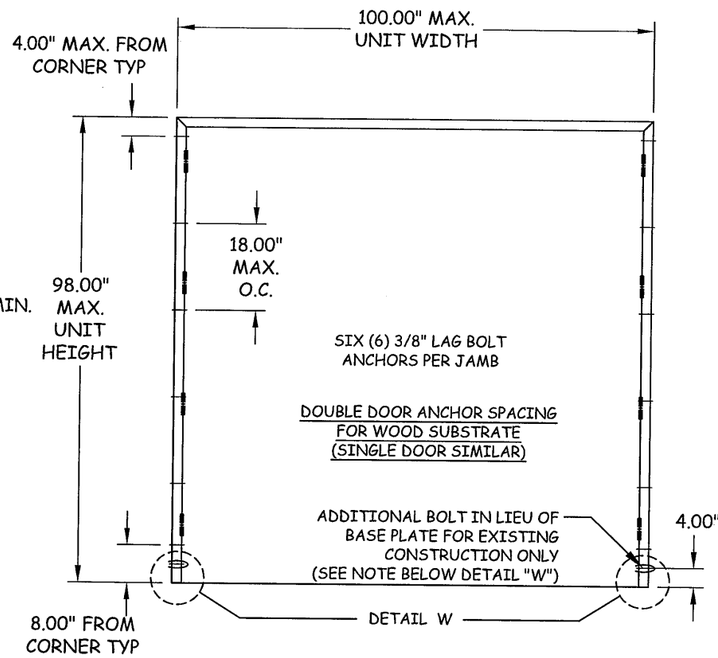

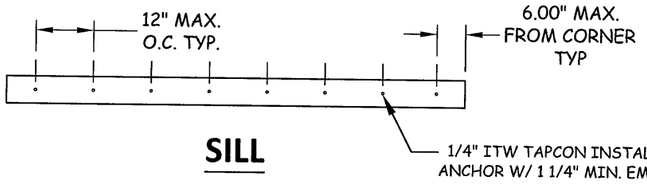

SILL

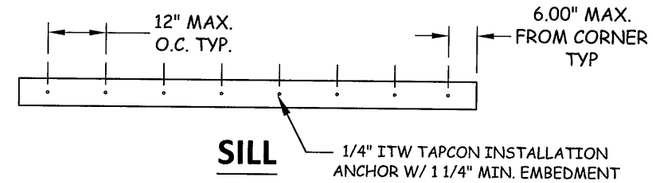

SILL

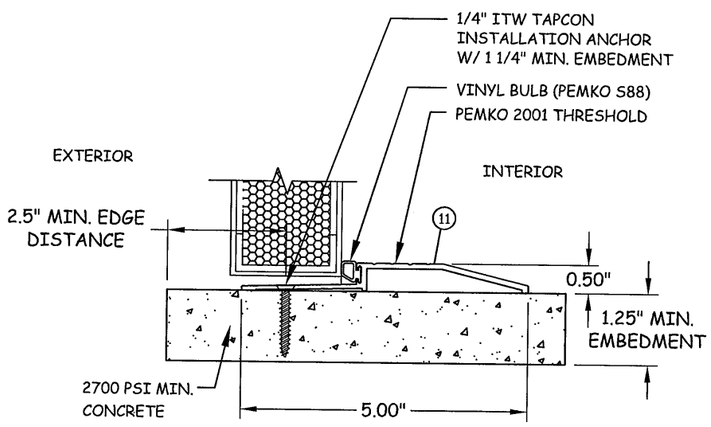

THRESHOLD DETAIL (SILL)

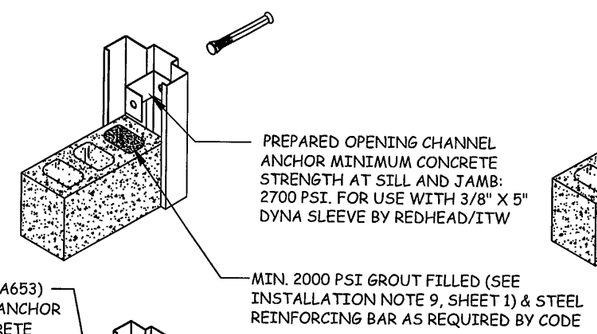

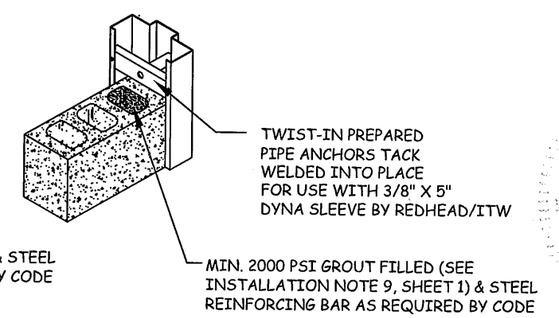

Fv = 9860 PSI
3/16" DIA. WIRE (STEEL ASTM-A653) x 8-3/4"LONG WIRE MASONRY ANCHOR APPLICATION MINIMUM CONCRETE STRENGTH AT SILL AND JAMB: 2700 PSI.
(FOR NEW CONSTRUCTION ONLY)

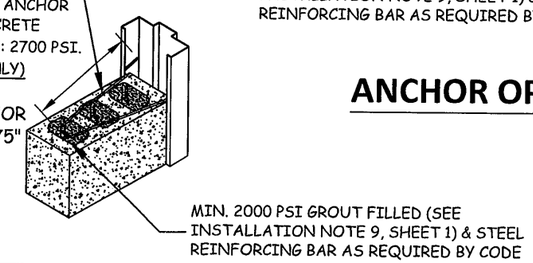

ANCHOR OPTIONS

PRODUCT REVISED
in complying with the Florida Building Code
Acceptance No. 12-0604.12
Expiration Date 2/3/15

Republic doors·frames
155 REPUBLIC DRIVE
MCKENZIE, TN 38201
PH: (800) 799-3667 FX: (731) 352-2556

TITLE: DL418 STEEL FLUSH DOOR
ANCHOR LAYOUT

PREPARED BY:
BUILDING DROPS, INC.
127 W. FAIRBANKS AVE., STE. 438
WINTER PARK, FL 32789
PH: (407) 644-6957 FX: (407) 644-2366

REVISIONS

NO.	DESCRIPTION	BY	DATE
C	COMMENTS PER MIAMI-DADE CO.	KSD	11.20.09
D	COMMENTS PER MIAMI-DADE CO.	HFN	01.05.10
E	2010 FBC UPDATES	MS	03.28.12

9-20-2012
FRONTS C. NORCRO, P.E.
FLORIDA REG. NO. 29578
127 W. FAIRBANKS AVE., STE. 438
WINTER PARK, FL 32789
FBPE CERT. OF AUTHORIZATION NO. 29578

DATE: 11.19.08
DWN BY: JLR
CHK BY: HN
SCALE: NTS
DWG #: RDF002
SHEET: 6 OF 10

s:\projects\republic doors\md-12-0227.1.2.3 (md - 2010 fbc code change)\rea 09-1210.01\dwgs\rdf002 republic dl418.dwg 9/20/2012 12:52 PM

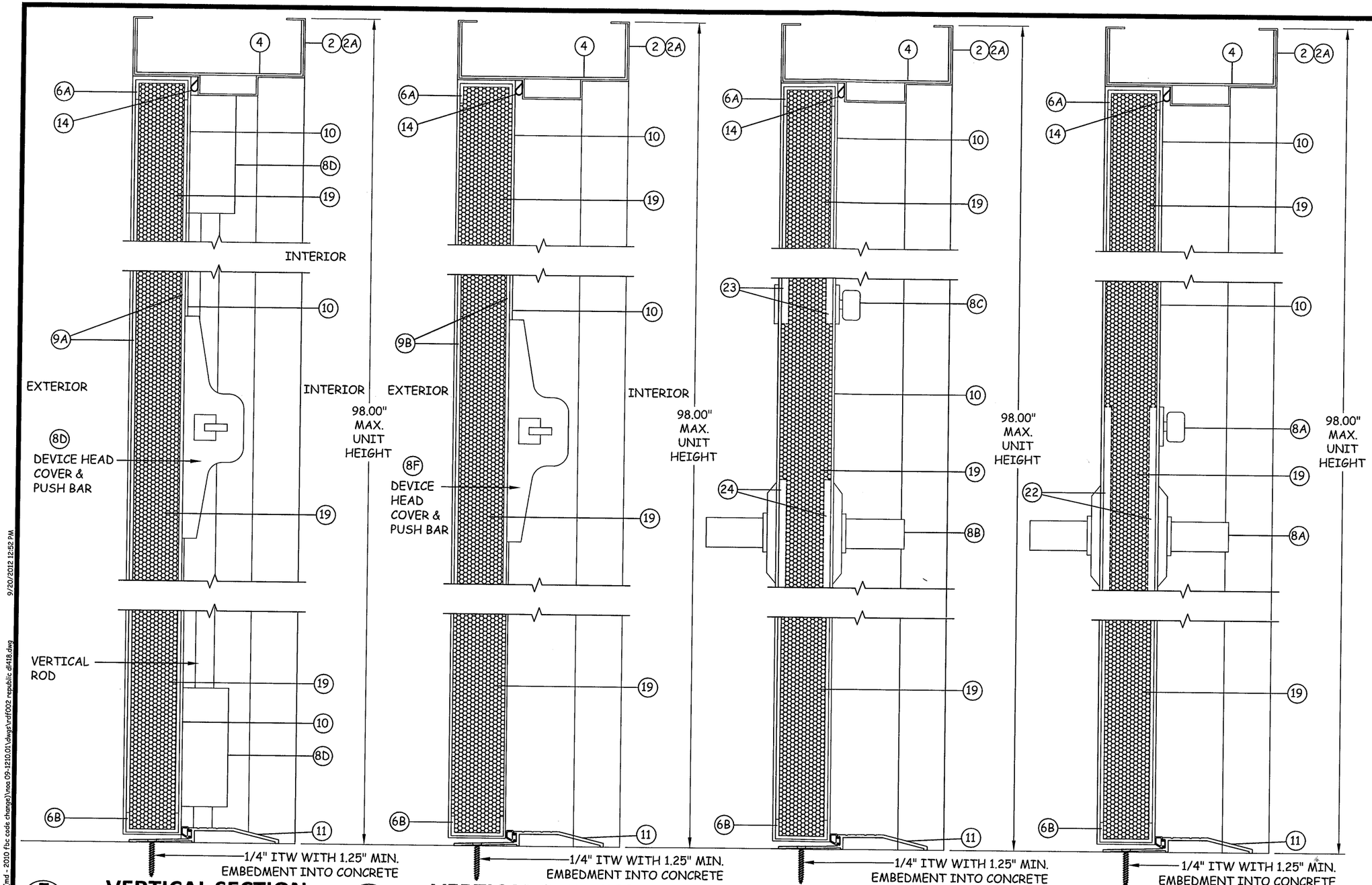

Republic doors·frames

155 REPUBLIC DRIVE
MCKENZIE, TN 38201
PH: (800) 799-3667 FX: (731) 352-2556

TITLE:
DL418 STEEL FLUSH DOOR
VERTICAL SECTIONS

PREPARED BY:
BUILDING DROPS, INC.
127 W. FAIRBANKS AVE., STE. 438
WINTER PARK, FL 32789
PH: (407) 644-6957 FX: (407) 644-2366

REVISIONS

NO.	DESCRIPTION	BY	DATE
A	COMMENTS PERMIAMI-DADE CO.	JLR	06.02.09
B	COMMENTS PER MIAMI-DADE CO.	JLR	10.12.09
C	2010 FBC UPDATES	MS	03.28.12

HERMES F. NORERO, P.E.
FLORIDA P.E. NO. 73778
127 W. FAIRBANKS AVE., STE. 438
WINTER PARK, FL 32789
FBPE CERT. OF AUTHORIZATION NO. 29578

9-20-2012

PRODUCT REVISED
as complying with the Florida Building Code
Acceptance No 12-0604.12
Expiration Date 2/3/15
By Ishag I. Chanda
Miami Dade Product Control

DATE: 11.19.08
DWN BY: JLR
CHK BY: HN
SCALE: NTS

DWG #: RDF002

SHEET: 7 OF 10

s:\projects\republic doors\md-12-0227.1.2.3 (md - 2010 fbc code change)\noa 09-1210.01\dwgs\rdf002 republic dl418.dwg 9/20/2012 12:52 PM

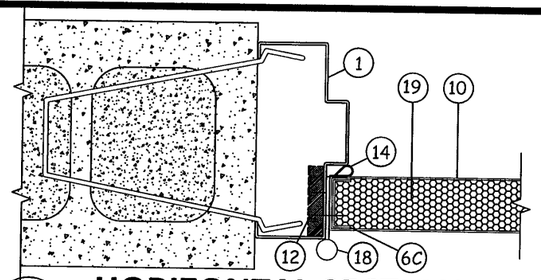

T/8 HORIZONTAL SECTION

JAMB - CONCRETE/MASONRY
WIRE ANCHOR

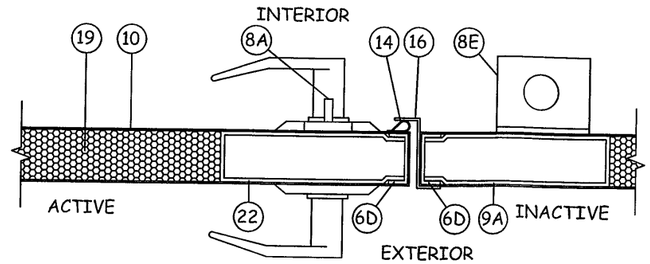

U/8 HORIZONTAL SECTION

MORTISE LOCK WITH DEADLOCK

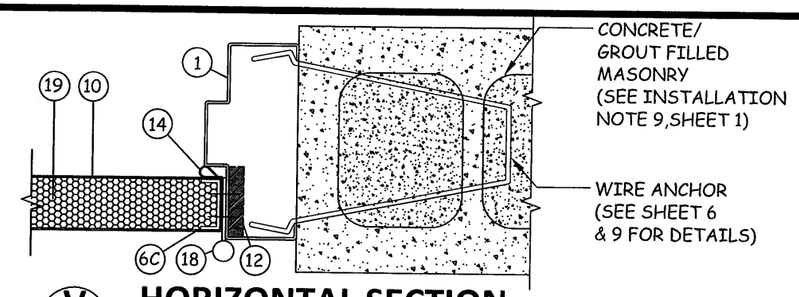

V/8 HORIZONTAL SECTION

JAMB - CONCRETE/MASONRY
WIRE ANCHOR

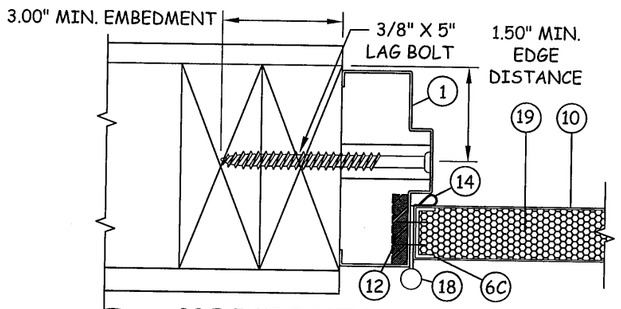

Q/8 HORIZONTAL SECTION

JAMB - 2X WOOD FRAME
3/8" X 6" LAG BOLT

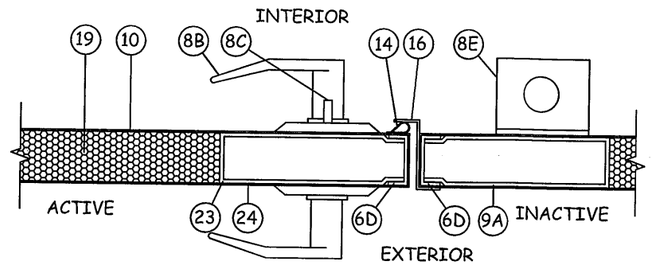

R/8 HORIZONTAL SECTION

CYLINDRICAL LOCK WITH DEADLOCK

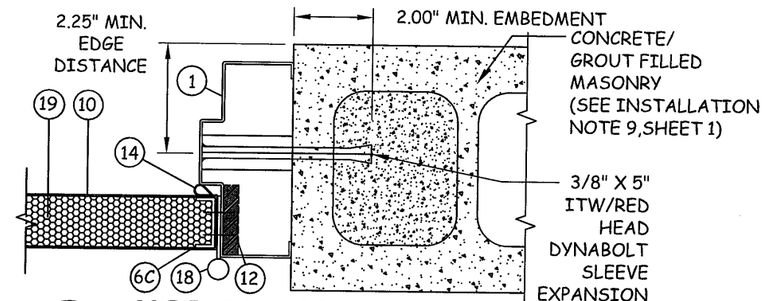

S/8 HORIZONTAL SECTION

JAMB - CONCRETE/MASONRY
EXPANSION BOLT WITH PIPE AND STRAP

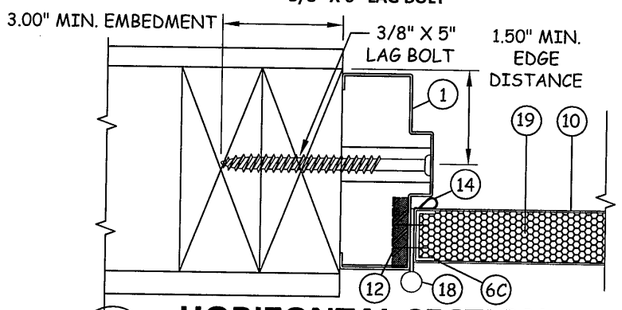

M/8 HORIZONTAL SECTION

JAMB - 2X WOOD FRAME
3/8" X 6" LAG BOLT

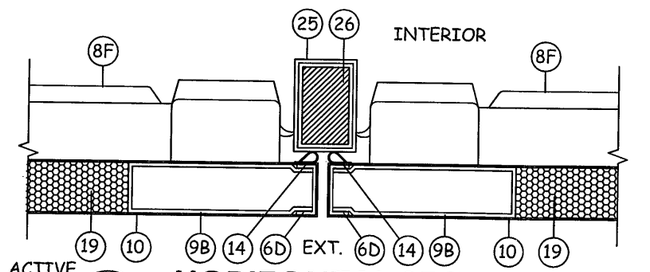

N/8 HORIZONTAL SECTION

RIM EXIT DEVICE

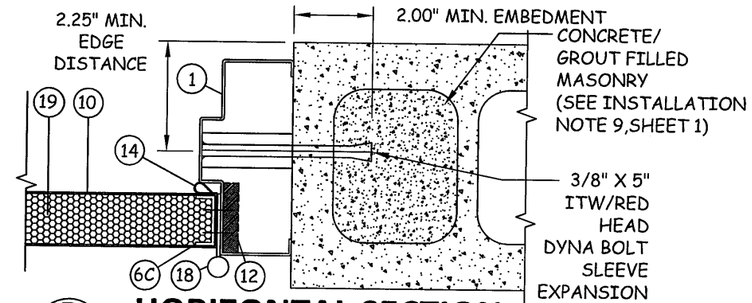

P/8 HORIZONTAL SECTION

JAMB - CONCRETE/MASONRY
EXPANSION BOLT W/ PIPE AND STRAP

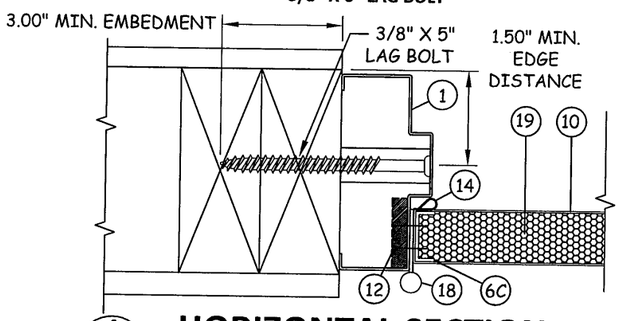

J/8 HORIZONTAL SECTION

JAMB - 2X WOOD FRAME
3/8" X 6" LAG BOLT

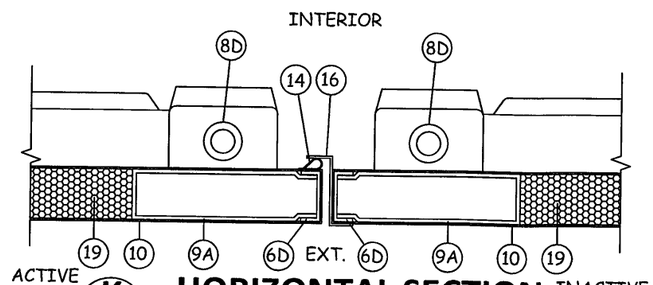

K/8 HORIZONTAL SECTION

SURFACE VERTICAL ROD

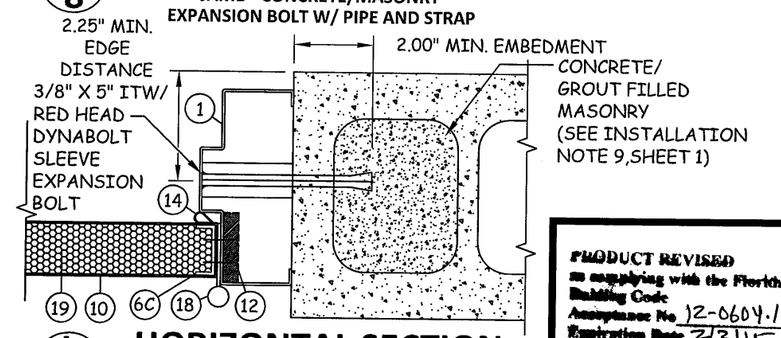

L/8 HORIZONTAL SECTION

JAMB - CONCRETE/MASONRY
EXPANSION BOLT W/ PIPE AND STRAP

PRODUCT REVISED
in complying with the Florida Building Code
Acceptance No. 12-0604.12
Expiration Date 2/3/15
By Ishaq I. Khan Jr.
Miami-Dade Product Control

Republic doors·frames

155 REPUBLIC DRIVE
MCKENZIE, TN 38201
PH: (800) 799-3667 FX: (731) 352-2556

TITLE: DL418 STEEL FLUSH DOOR
HORIZONTAL SECTIONS

PREPARED BY:
BUILDING DROPS, INC.
127 W. FAIRBANKS AVE., STE. 438
WINTER PARK, FL 32789
PH: (407) 644-6957 FX: (407) 644-2366

REVISIONS

NO.	DESCRIPTION	BY	DATE
C	COMMENTS PER MIAMI-DADE CO.	KSD	11.20.09
D	COMMENTS PER MIAMI-DADE CO.	HFN	01.05.10
E	2010 FBC UPDATES	MS	03.28.12

HERMES F. NORSO, P.E.
FLORIDA LIC. NO. 57176
127 W. FAIRBANKS AVE. STE. 438
WINTER PARK, FL 32789
FBPE CERT. OF AUTHORIZATION NO. 29578

DATE:	DWN BY:	CHK BY:	SCALE:
11.19.08	JLR	HN	NTS

DWG #: RDF002

SHEET: 8 OF 10

s:\projects\republic doors\md-12-0227.1.2.3 (md - 2010 fbc code change)\noa 09-1210.01\dwgs\rdf002 republic dl418.dwg 9/20/2012 12:52 PM

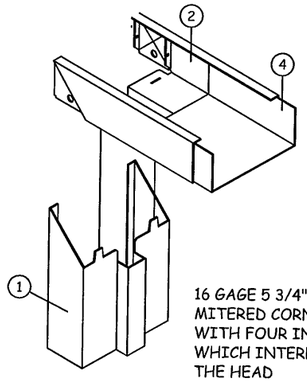

16 GAGE 5 3/4" DEPTH FRAME WITH MITERED CORNER CONSTRUCTION WITH FOUR INTEGRAL TABS WHICH INTERLOCK THE JAMBS TO THE HEAD

DETAIL Y

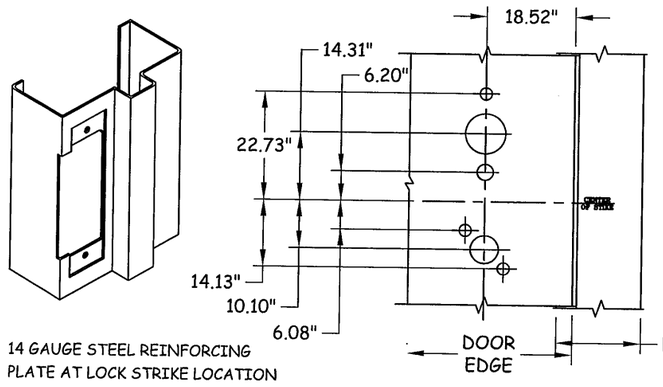

14 GAUGE STEEL REINFORCING PLATE AT LOCK STRIKE LOCATION

DETAIL X

LOCK REINFORCEMENT

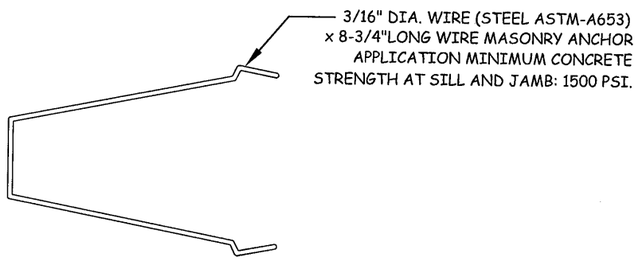

WIRE ANCHOR DETAIL

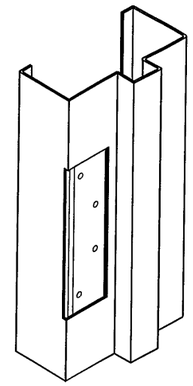

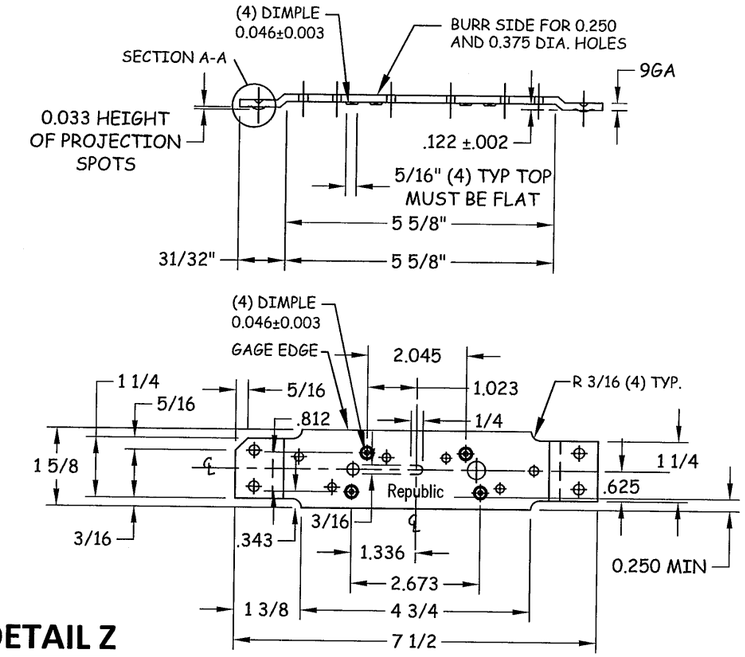

DETAIL Z

HINGE REINFORCEMENT

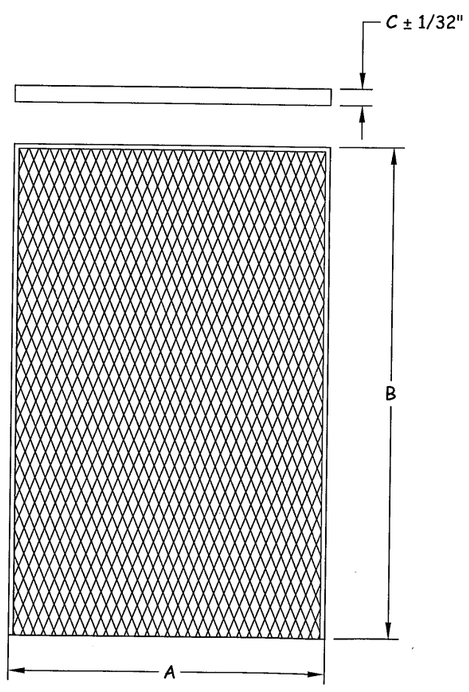

HONEYCOMB CORE			
Part Number	A	B	C
3993000	2'-0 TO 2'-6	CUT TO LENGTH	1.73
3993001	2'-8 TO 3'-4	CUT TO LENGTH	1.73
3993013	3'-6 TO 4'-1	CUT TO LENGTH	1.73

1. **General**

Type 99-0-3/4 Honecomb core is fabricated of Kraft paper and is bonded Together to form ¾" wide hexagonal cells when expanded. Core is to be Non-impregnated, not expanded with cut edges, 1.730" ± .010 thick.

2. **Honeycomb Core Data**

Base Material, lbs./3000 sq. ft. sheet stock	99
Resin Content	0
Moisture Content	6-8%
Cell Size	¾"
Density lbs./cubic ft. expanded	1.56
Crushing lbs./sq. in.	48

HONEYCOMB CORE

PRODUCT REVISED
as complying with the Florida Building Code
Acceptance No 12-0604.12
Expiration Date 2/3/15
By Ishaq I. Khyde
Miami Dade Product Control

Republic doors·frames
155 REPUBLIC DRIVE
MCKENZIE, TN 38201
PH: (800) 799-3667 FX: (731) 352-2556

TITLE: DL418 STEEL FLUSH DOOR
CORNER ASSEMBLIES & COMPONENTS

PREPARED BY:
BUILDING DROPS, INC.
127 W. FAIRBANKS AVE., STE. 438
WINTER PARK, FL 32789
PH: (407) 644-6957 FX: (407) 644-2366

REVISIONS

NO.	DESCRIPTION	BY	DATE
A	COMMENTS PER MIAMI-DADE CO.	JLR	06.02.09
B	COMMENTS PER MIAMI-DADE CO.	JLR	10.12.09
C	2010 FBC UPDATES	MS	03.28.12

HERMES F. NORERO, P.E.
FLORIDA P.E. NO. 73778
127 W. FAIRBANKS AVE., STE. 438
WINTER PARK, FL 32789
FBPE CERT. OF AUTHORIZATION NO. 29578
9-20-2012

DATE: 11.19.08
DWN BY: JLR
CHK BY: HN
SCALE: NTS

DWG #: RDF002

SHEET: 9 OF 10

s:\projects\republic doors\md-12-0227.1.2.3 (md - 2010 fbc code change)\noa 09-1210.01\dwgs\rdf002 republic dl418.dwg 9/20/2012 12:52 PM

BILL OF MATERIALS

ITEM NO.	DESCRIPTION	MATERIAL	MANUFACTURER
1	96" X 5.75" DOUBLE SWING JAMB PAIR OR SINGLE JAMB	0.053" STEEL	REPUBLIC DOOR & FRAMES
2	96" X 5.75" FACE DOUBLE OPENING HEADER	0.053" STEEL	REPUBLIC DOOR & FRAMES
2A	52" X 5.75" SINGLE DOOR HEADER	0.053" STEEL	REPUBLIC DOOR & FRAMES
3	HINGE REINFORCING FRAME	0.132" STEEL	REPUBLIC DOOR & FRAMES
4	HEADER SLEEVE REINFORCEMENT 14 GA. (.067") X 5.6875" X FULL LENGTH HEADER	0.067" STEEL	REPUBLIC DOOR & FRAMES
5	BASE ANCHOR 1.875" X 1.875"	0.053" STEEL	REPUBLIC DOOR & FRAMES
6A	TOP CHANNELS 16 GA. X 1.677" X 0.62" CHANNEL FULL LENGTH DOOR PANEL WIDTH	0.053" STEEL	REPUBLIC DOOR & FRAMES
6B	BOTTOM CHANNELS 16 GA. X 1.677" X 0.62" CHANNEL FULL LENGTH OF DOOR PANEL WIDTH	0.053" STEEL	REPUBLIC DOOR & FRAMES
6C	HINGE CHANNELS 16 GA. X 1.677" X 0.62" CHANNEL FULL DOOR HEIGHT	0.053" STEEL	REPUBLIC DOOR & FRAMES
6D	LOCK CHANNELS 16 GA. X 1.677" X 0.62" CHANNEL FULL DOOR HEIGHT	0.053" STEEL	REPUBLIC DOOR & FRAMES
7C	AIR FILTRATION WEATHERSTRIP		
8A	DORMA ML9953D OR SCHLAGE L900 MORTISE LOCK W/ DEADBOLT	STEEL	DORMA
8B	DORMA CL753D OR SCHLAGE ND SERIES STANDARD LATCH	STEEL	DORMA
8C	DORMA DB660D DEADLOCK	STEEL	DORMA
8D	HCF SURFACE VERTICAL ROD W/ PANIC DEVICE 2200	STEEL	PRECISION
8E	IVES MODEL 360 SURFACE BOLTS	STEEL	IVES
8F	HCF RIM PANIC DEVICE 2100 (W/ HC822 MULLION DOUBLE DOOR)	STEEL	PRECISION
9A	CONTINUOUS HARDWARE REINF. 12 GA. (0.101") 1.677" X 6" X (DOOR HEIGHT - 11")	0.101" STEEL	REPUBLIC DOOR & FRAMES
9B	EXIT DEVICE REINFORCEMENT 14 GA. (0.067") 1.677" X 5.313" X 14"	0.067" STEEL	REPUBLIC DOOR & FRAMES
9D	CH LOCK REINFORCEMENT 16 GA. X 1.677" X 0.62" X 1.677" CHANNEL FULL DOOR HEIGHT	0.053" STEEL	REPUBLIC DOOR & FRAMES
9E	CLOSER REINFORCEMENT 12 GA. (0.101") X 1.677" X 6" X 18"	0.101" STEEL	REPUBLIC DOOR & FRAMES
10	DOOR SKINS FY=43.9 KSI MIN.	0.045"STEEL	REPUBLIC DOOR & FRAMES
11	PEMKO 2001 THRESHOLD	ALUMINUM	PEMKO
12	DOOR HINGE REINFORCEMENT 9 GA. (0.132") X 7.5" X 1.625"	0.132" STEEL	REPUBLIC DOOR & FRAMES
13	ANCHORS (SEE SHEET 5) 3/8" LAG BOLT, 3/8" DYNABOLT ITW/RED HEAD & 1/4" ITW	VARIES	ITW / RED HEAD
14	PEMKO S88 WEATHERSTRIP	VINYL BULB	PEMKO
15	ALL PURPOSE SILICONE CAULK	SILICONE	
16	INACTIVE LEAF ASTRAGAL 14 GA. (0.067") X 1.7" X FULL DOOR HEIGHT	0.067" STEEL	REPUBLIC DOOR & FRAMES
17	CUT OUT REINFORCEMENT	0.053" STEEL	REPUBLIC DOOR & FRAMES
18	4 1/2" X 4 1/2" X .134" THICK BALL BEARING TEMPLATE BUTT HINGES		S. PARKER
19	HONEYCOMB CORE TYPE 99-0-3/4	KRAFT PAPER	REPUBLIC DOOR & FRAMES
20	SURFACE BOLT ANGLE REINFORCEMENT 7 GAUGE X 0.175" X 1.5" X 1.5"	0.175" STEEL	
21	REESE 353A ALUMINUM DRIP CAP	ALLOY 6063-T5	
22	MORTISE LOCK REINFORCEMENT 14 GAUGE X 1.677" X 5.313" X 14"	0.067"STEEL	REPUBLIC DOOR & FRAMES
23	DEAD LOCK REINFORCEMENT 16 GAUGE X 3" X 3"	0.053" STEEL	REPUBLIC DOOR & FRAMES
24	CYLINDRICAL LOCK REINFORCEMENT 16 GAUGE X 3" X 2.5"	0.053" STEEL	REPUBLIC DOOR & FRAMES
25	MULLION 2" X 3" PRECISION HC822 (A-500 GRADE B)	STEEL	PRECISION
26	MULLION REINFORCEMENT 1.5" X 2.5" (FULL LENGTH)	STEEL	PRECISION

1 JAMB FRAME

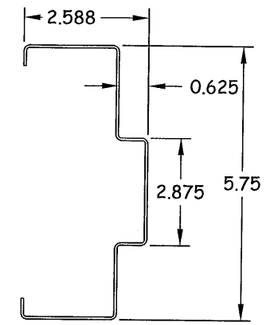

2 2A HEADER FRAME

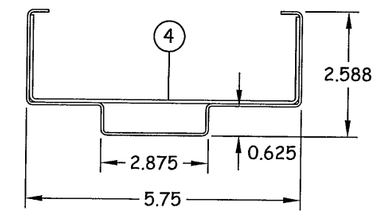

6A 6B 6C 6D CHANNELS

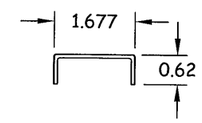

8E IVES 360 SURFACE BOLT

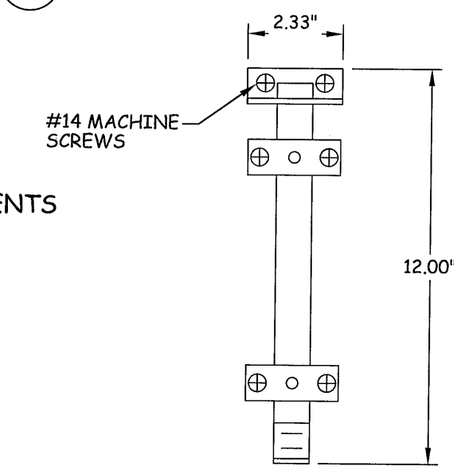

9A 22 23 24 REINFORCEMENTS

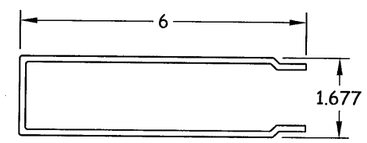

11 PEMKO 2100 THRESHOLD

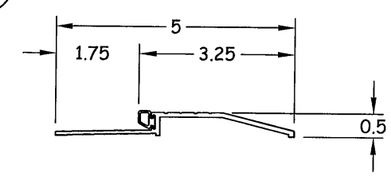

16 INACTIVE LEAF ASTRAGAL

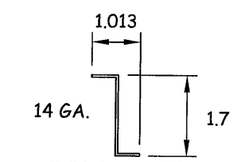

L = FULL DOOR HEIGHT

21 REESE 353A DRIP CAP

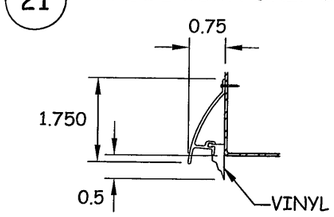

REESE 353A ALUMINUM DRIP CAP WITH VINYL FLAP AT HEADER (ALLOY 6063-T5)

25 HC822 STEEL MULLION (ASTM A-500)

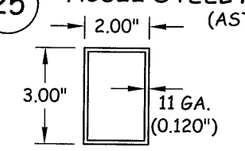

NOTE: ALL DIMENSIONS SHOWN ARE IN INCHES.

26 MULLION REINF.

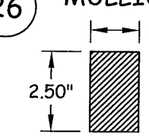

PRODUCT REVISED
In complying with the Florida Building Code
Application No. 12-0604.12
Expiration Date FEB03 2015
Shaq I. Chand
State/Product Control

Republic doors·frames
155 REPUBLIC DRIVE
MCKENZIE, TN 38201
PH: (800) 799-3667 FX: (731) 352-2556

TITLE: DL418 STEEL FLUSH DOOR
BILL OF MATERIALS & COMPONENTS

PREPARED BY:
BUILDING DROPS, INC.
127 W. FAIRBANKS AVE., STE. 438
WINTER PARK, FL 32789
PH: (407) 644-6957 FX: (407) 644-2366

REVISIONS

NO.	DESCRIPTION	BY	DATE
A	COMMENTS PER MIAMI-DADE CO.	JLR	06.02.09
B	COMMENTS PER MIAMI-DADE CO.	JLR	10.12.09
C	COMMENTS PER MIAMI-DADE CO.	KSD	11.20.09
D	2010 FBC UPDATES	MS	03.28.12

HERMES F. NORERO, P.E.
FLORIDA P.E. NO. 75773
127 W. FAIRBANKS AVE., STE. 438
WINTER PARK, FL 32789
FBPE, CERT. OF AUTHORIZATION NO. 28578

DATE: 11.19.08
DWN BY: JLR
CHK BY: HN
SCALE: NTS
DWG #: RDF002
SHEET: 10 OF 10

s:\projects\republic doors\md-12-0227.1.2.3 (md - 2010 fbc code change)\nxa 09-1210.01\dwgs\rdf002 republic dl418.dwg 9/20/2012 12:52 PM