MIAMI-DADE COUNTY
PRODUCT CONTROL SECTION
11805 SW 26 Street, Room 208
Miami, Florida 33175-2474
T (786) 315-2590 F (786) 315-2599
www.miamidade.gov/economy

DEPARTMENT OF REGULATORY AND ECONOMIC RESOURCES (RER)
BOARD AND CODE ADMINISTRATION DIVISION

NOTICE OF ACCEPTANCE (NOA)

Reliable Products
1300 Enterprise Rd. (PO Box 580)
Geneva, AL 36340

SCOPE: This NOA is being issued under the applicable rules and regulations governing the use of construction materials. The documentation submitted has been reviewed and accepted by Miami-Dade County RER-Product Control Section to be used in Miami Dade County and other areas where allowed by the Authority Having Jurisdiction (AHJ).

This NOA shall not be valid after the expiration date stated below. The Miami-Dade County Product Control Section (In Miami Dade County) and/or the AHJ (in areas other than Miami Dade County) reserve the right to have this product or material tested for quality assurance purposes. If this product or material fails to perform in the accepted manner, the manufacturer will incur the expense of such testing and the AHJ may immediately revoke, modify, or suspend the use of such product or material within their jurisdiction. RER reserves the right to revoke this acceptance, if it is determined by Miami-Dade County Product Control Section that this product or material fails to meet the requirements of the applicable building code.

This product is approved as described herein, and has been designed to comply with the Florida Building Code, including the High Velocity Hurricane Zone.

DESCRIPTION: Model 6375DC Aluminum Louver

APPROVAL DOCUMENT: Drawing No. **60-022283-00B**, titled "6375DC Test and Approval Drawings" Sheets 1 through 20 of 20, dated 03/23/2012, with revision B dated 07/02/2012, prepared by the manufacturer, signed and sealed by Daniel J. Rau, P.E., bearing the Miami-Dade County Product Control revision stamp with the Notice of Acceptance number and expiration date by the Miami-Dade County Product Control Section.

MISSILE IMPACT RATING: Large and Small Missile Impact Resistant

LABELING: Each unit shall bear a permanent label with the manufacturer's name or logo, city, state, model/series, and following statement: "Miami-Dade County Product Control Approved", unless otherwise noted herein.

LIMITATION: This louver is to be installed in a location where the room behind the louver is designed to drain water penetrating into the room, and the room will house water resistant/water proof equipment, components, or supplies.

RENEWAL of this NOA shall be considered after a renewal application has been filed and there has been no change in the applicable building code negatively affecting the performance of this product.

TERMINATION of this NOA will occur after the expiration date or if there has been a revision or change in the materials, use, and/or manufacture of the product or process. Misuse of this NOA as an endorsement of any product, for sales, advertising or any other purposes shall automatically terminate this NOA. Failure to comply with any section of this NOA shall be cause for termination and removal of NOA.

ADVERTISEMENT: The NOA number preceded by the words Miami-Dade County, Florida, and followed by the expiration date may be displayed in advertising literature. If any portion of the NOA is displayed, then it shall be done in its entirety.

INSPECTION: A copy of this entire NOA shall be provided to the user by the manufacturer or its distributors and shall be available for inspection at the job site at the request of the Building Official.

This NOA **revises and renews NOA # 11-0408.06** and consists of this page 1 and evidence page E-1, as well as approval document mentioned above.

The submitted documentation was reviewed by **Carlos M. Utrera, P.E.**

MIAMI-DADE COUNTY APPROVED

09/25/2012

NOA No. 12-0607.01
Expiration Date: July 9, 2016
Approval Date: October 4, 2012

NOTICE OF ACCEPTANCE: EVIDENCE SUBMITTED

A. DRAWINGS

1. Drawing No. **60-022283-00B**, titled "6375DC Test and Approval Drawings" Sheets 1 through 20 of 20, dated 03/23/2012, with revision B dated 07/02/2012, prepared by the manufacturer, signed and sealed by Daniel J. Rau, P.E.

B. TESTS *"Submitted under NOA # 12-0601.22"*

1. Test reports on: 1) Uniform Static Air Pressure Test, Loading per FBC TAS 202-94
   2) Large Missile Impact Test per FBC, TAS 201-94
   3) Cyclic Wind Pressure Loading per FBC, TAS 203-94

   along with marked-up drawings and installation diagram of ELF6375DXD Aluminum Louvers", prepared by National Certified Testing Laboratories, Report No. **210-3780-1**, dated 03/26/2012, signed and sealed by Gerald J. Ferrara, P.E.

   "Submitted under NOA # 01-0328.04"

2. Test report on Large Missile Impact Test per PA 201, Cyclic wind Pressure Test per PA 203 and Uniform Static Air Pressure Test per PA 202 of "Open, Extruded Aluminum Louver Assembly," prepared by Construction Research Laboratory Inc., Report No.**97-1124.22**, dated 08/04/2000 and revised on 12/18/2000, signed and sealed by N. S. Balsara, P.E.

C. CALCULATIONS *"Submitted under NOA # 11-0408.06"*

1. ELF6375DXD louver wind load review, prepared by the manufacturer, dated 08/06/2010, signed and sealed by Daniel J. Rau, P.E.

   "Submitted under NOA # 11-0408.05"

2. ELF6375DXD clip angle installation Dade County wind load review, prepared by the manufacturer, dated 08/06/2010, signed and sealed by Daniel J. Rau, P.E.

D. QUALITY ASSURANCE

1. Miami-Dade Department of Regulatory and Economic Resources (RER)

E. MATERIAL CERTIFICATIONS *"Submitted under NOA # 12-0601.22"*

1. Test report on impact test of an ELF6375DXD louver per AMCA 540, prepared by the manufacturer, Test Report No. **053112A**, dated 05/31/2012, signed and sealed by Daniel J. Rau, P.E.

F. STATEMENTS

1. Statement letter of code conformance to 2010 FBC and no financial interest, issued by the manufacturer, dated 04/26/2012, signed and sealed by Daniel J. Rau, P.E.
   "Submitted under NOA # 11-0408.05"
2. Statement letter of code conformance with 2007 FBC, issued by the manufacturer, dated 07/01/2011, signed and sealed by William J. Mossie, P.E.
3. Private label agreement dated 11/10/2008. ***"Submitted under NOA # 08-1110.12"***

09/25/2012

Carlos M. Utrera, P.E.
Product Control Examiner
NOA No. 12-0607.01
Expiration Date: July 9, 2016
Approval Date: October 4, 2012

NOTES:

1. THE 6375DC HAS BEEN TESTED IN ACCORDANCE WITH MIAMI-DADE COUNTY PROTOCOLS TAS-201, 202, 203 FOR LARGE MISSLE IMPACT, UNIFORM PRESSURE AND CYCLIC WIND PRESSURE

2. THE LOUVER SYSTEM IS APPROVED FOR APPLICATIONS WITH DESIGN PRESSURES OF+/-148 PSF OR LESS.

3. THIS LOUVER SYSTEM IS NON-BEARING AND IS NOT DESIGNED TO WITHSTAND BUILDING DEAD LOADS.

4. LOUVER ANCHORS ARE REVIEWED FOR ATTACHMENT INTO STEEL, ALUMINUM, CONCRETE, MASONRY BLOCK (CMU), WOOD SUBSTRATES. MINIMUM EDGE DISTANCE AND EMBEDMENT REQUIREMENTS ARE SHOWN. RUSKIN DOES NOT DETERMINE THE STRUCTURAL INTEGRITY OF THE SUBSTRATE. (A)

5. MAXIMUM SINGLE SECTION SIZE IS 87 7/8" WIDE X 119 3/4" HIGH.

6. MAXIMUM ASSEMBLED LOUVER SIZE: UNLIMITED WIDTH X 119 3/4" HIGH. MAXIMUM MULLION SPACING IS 87 7/8"

7. SECTIONS OR ASSEMBLIES MAY BE STACKED VERTICALLY PROVIDNG A SUITABLE STRUCTURAL SUPPORT IS DESIGNED AND INSTALLED BY OTHERS TO SUPPORT ALL LOADS TRANSFERRED FROM THE LOUVER.

8. TAS 100A FOR WIND DRIVEN RAIN WAS NOT PERFORMED

9. ALL DISSIMILAR MATERIALS INCLUDING STEEL THAT IS IN CONTACT WITH ALUMINUM SHALL BE PROTECTED IN COMPLIANCE WITH FLORIDA BUILDING CODE 2003.8.4.2

10. HDG = HOT DIP GALVANIZED

DRAWING INDEX:

60-022277-00B SHEET 1 OF 20 - NOTES AND DRAWING INDEX
60-022277-00B SHEET 2 OF 20 - 6375DC TEST LOUVER - ASSY 'A'
60-022277-00B SHEET 3 OF 20 - SECTIONS & DETAILS
60-022277-00B SHEET 4 OF 20 - SECTIONS & DETAILS
60-022277-00B SHEET 5 OF 20 - SECTIONS & DETAILS
60-022277-00B SHEET 6 OF 20 - SECTIONS & DETAILS
60-022277-00B SHEET 7 OF 20 - SECTIONS & DETAILS
60-022277-00B SHEET 8 OF 20 - SECTIONS & DETAILS
60-022277-00B SHEET 9 OF 20 - SECTIONS & DETAILS
60-022277-00B SHEET 10 OF 20 - SECTIONS & DETAILS
60-022277-00B SHEET 11 OF 20 - SECTIONS & DETAILS
60-022277-00B SHEET 12 OF 20 - SECTIONS & DETAILS
60-022277-00B SHEET 13 OF 20 - SECTIONS & DETAILS
60-022277-00B SHEET 14 OF 20 - PART DETAILS
60-022277-00B SHEET 15 OF 20 - PART DETAILS
60-022277-00B SHEET 16 OF 20 - PART DETAILS
60-022277-00B SHEET 17 OF 20 - PART DETAILS
60-022277-00B SHEET 18 OF 20 - PART DETAILS
60-022277-00B SHEET 19 OF 20 - PART DETAILS
60-022277-00B SHEET 20 OF 20 - PART DETAILS

ENGINEER OF RECORD
DAN RAU

ENGINEERING DISCIPLINE
CIVIL ENGINEERING

REGISTRATION NUMBER
FL# 63636

DANIEL J. RAU
LICENSE
NO. 63636
STATE OF FLORIDA
PROFESSIONAL ENGINEER

7/5/2012

FOR OFFICE USE ONLY

FOR OFFICE USE ONLY

PRODUCT REVISED
as complying with the Florida Building Code
Acceptance No 12-0607.01
Expiration Date 07/09/2016
By
Miami Dade Product Control

TOLERANCES
DECIMAL DIMENSIONS:
3 PLACE .XXX ±.010
2 PLACE .XX ±.020
FRACTION DIMENSIONS: ± 1/16
ANGLE DIMENSIONS ± 2°
USE WQ-007 & 008
UNLESS SPECIFIED OTHERWISE

DWN. BY: DJR	CHK. BY: DRP	APPV'D. BY: DRP	APPV'D. BY:
DATE: 02/17/12	DATE: 3/23/12	DATE: 3/23/12	DATE:

SHEET 1 OF 20

CHANGE LETTER	REVISION DESCRIPTION	DWN. BY:	CHK'D. BY:	APPV'D. BY:	APPV'D. BY:	DATE
(A)	REVISED PER DADE CO. MARKUPS	DRP	DJR	DJR		7/2/12

RELIABLE
1300 Enterprise Road
Geneva, Alabama 36340
PHONE (334) 684-3621
FAX (334) 684-2832

PLOT SCALE
NONE

ECN:

TITLE
6375DC TEST AND APPROVAL DRAWINGS

DWG. NO.
60-022283-00B

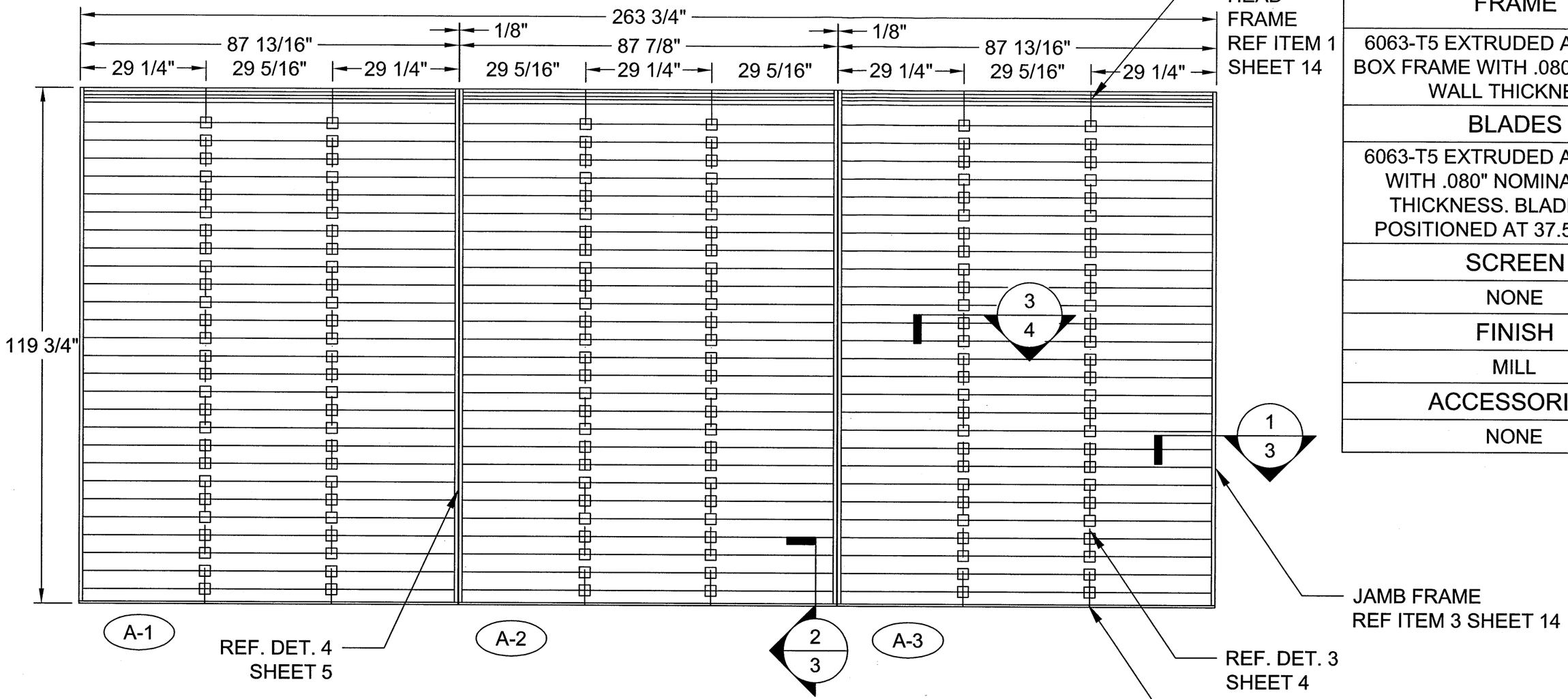

FRAME
6063-T5 EXTRUDED ALUMINUM BOX FRAME WITH .080" NOMINAL WALL THICKNESS
BLADES
6063-T5 EXTRUDED ALUMINUM WITH .080" NOMINAL WALL THICKNESS. BLADES ARE POSITIONED AT 37.5° ANGLE
SCREEN
NONE
FINISH
MILL
ACCESSORIES
NONE

ASSEMBLY A

6375DC

N.T.S.

FRONT VIEW

QTY: (3) ASSEMBLY REQ'D w/ 3 SHIP SECTIONS PER ASSEMBLY

ENGINEER OF RECORD	DAN RAU
ENGINEERING DISCIPLINE	CIVIL ENGINEERING
REGISTRATION NUMBER	FL# 63636

DANIEL J. RAU LICENSE NO. 63636 STATE OF FLORIDA PROFESSIONAL ENGINEER

7/5/2012

FOR OFFICE USE ONLY

FOR OFFICE USE ONLY

PRODUCT REVISED
as complying with the Florida Building Code
Acceptance No 12-0607.01
Expiration Date 07/09/2016
By
Miami Dade Product Control

TOLERANCES
DECIMAL DIMENSIONS:
3 PLACE .XXX ± .010
2 PLACE .XX ± .020
FRACTION DIMENSIONS: ± 1/16
ANGLE DIMENSIONS ± 2°
USE WIQ-007 & 008
UNLESS SPECIFIED OTHERWISE

DWN. BY: DJR	CHK. BY: DRP	APPV'D. BY: DRP	APPV'D. BY:
DATE: 02/17/12	DATE: 3/23/12	DATE: 3/23/12	DATE:

SHEET 2 OF 20

CHANGE LETTER	REVISION DESCRIPTION	DWN. BY:	CHK'D. BY:	APPV'D. BY:	APPV'D. BY:	DATE
A	REVISED PER DADE CO. MARKUPS	DRP	DJR	DJR		7/2/12

RELIABLE
1300 Enterprise Road
Geneva, Alabama 36340
PHONE (334) 684-3621
FAX (334) 684-2832

PLOT SCALE: NONE

ECN:

TITLE: 6375DC TEST AND APPROVAL DRAWINGS

DWG. NO. 60-022283-00B

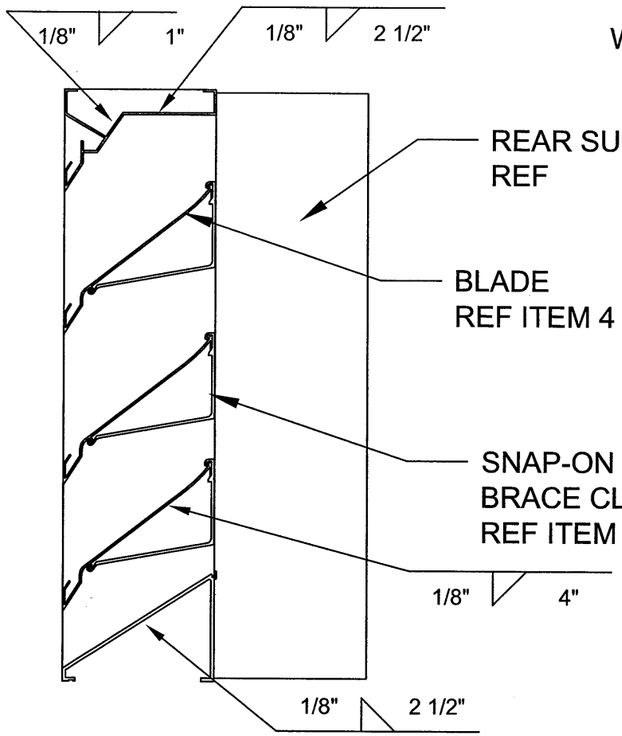

6375DC

N.T.S.

ASSEMBLY INFO

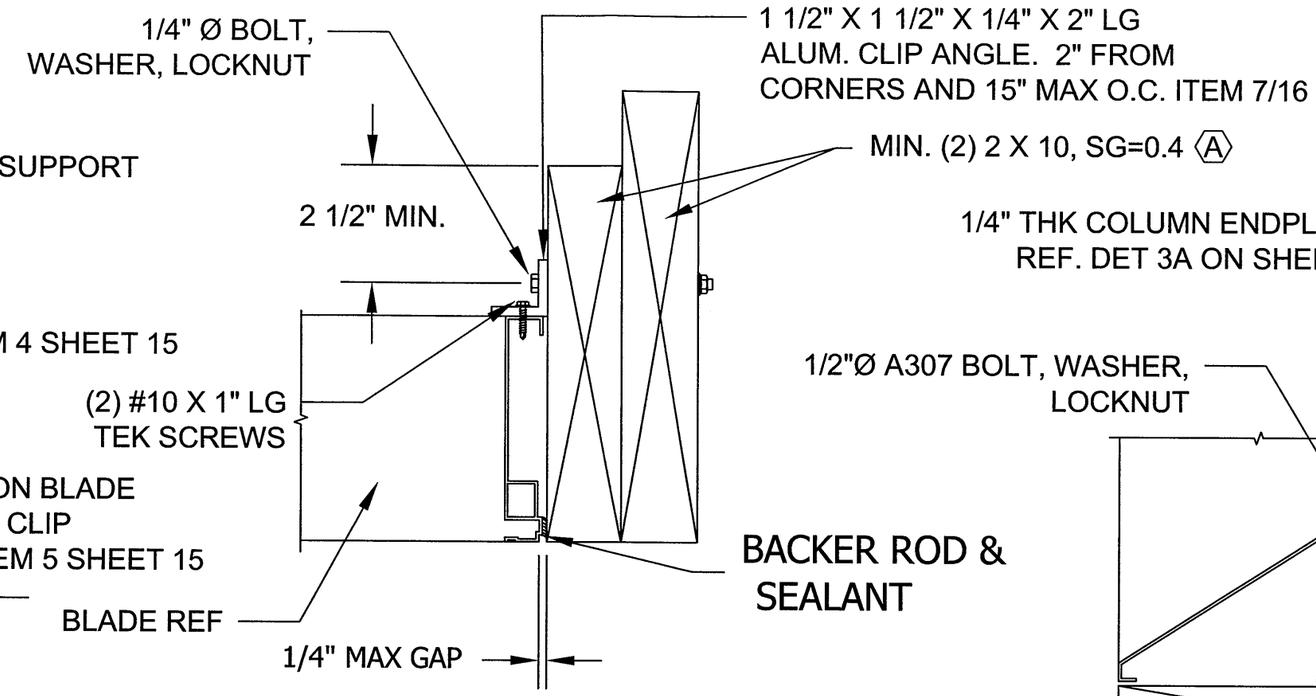

1 / - JAMB DETAIL - WOOD SUBSTRATE

N.T.S.

REF DETAIL 1A/6, 1B/6, 1C/7, 1D/7, 1E/8 FOR ALTERNATE FRAME MATERIALS

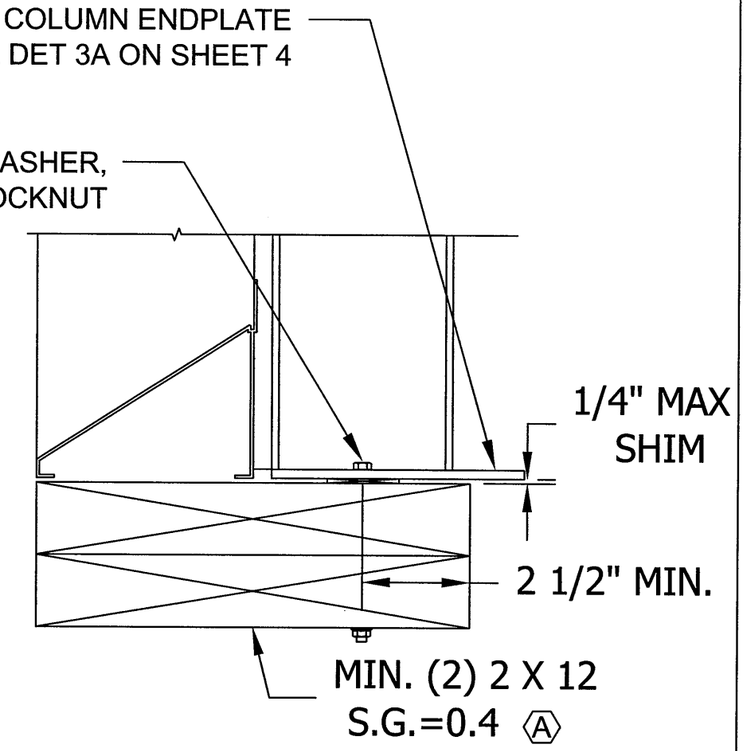

2 / - SILL DETAIL- WOOD SUBSTRATE (HEAD SIM)

N.T.S.

REF DETAIL 2A/9, 2B/10, 2C/11, 2H/12 FOR ALTERNATE SUBSTRATE MATERIALS

ENGINEER OF RECORD
DAN RAU

ENGINEERING DISCIPLINE
CIVIL ENGINEERING

REGISTRATION NUMBER
FL# 63636

DANIEL J. RAU
LICENSE
NO. 63636
STATE OF
FLORIDA
PROFESSIONAL ENGINEER
7/5/2012

FOR OFFICE USE ONLY

FOR OFFICE USE ONLY

PRODUCT REVISED
as complying with the Florida
Building Code
Acceptance No 12-0607.01
Expiration Date 07/09/2016
By
Miami Dade Product Control

TOLERANCES
DECIMAL DIMENSIONS:
3 PLACE .XXX +.010
2 PLACE .XX +.020
FRACTION DIMENSIONS: + 1/16
ANGLE DIMENSIONS + 2°
USE WIQ-007 & 008
UNLESS SPECIFIED OTHERWISE

DWN. BY: DJR	CHK. BY: DRP	APPV'D. BY: DRP	APPV'D. BY:
DATE: 02/17/12	DATE: 3/23/12	DATE: 3/23/12	DATE:

SHEET 3 OF 20

CHANGE LETTER	REVISION DESCRIPTION	DWN. BY:	CHK'D. BY:	APPV'D. BY:	APPV'D. BY:	DATE
(B)	REVISED PER DADE CO. MARKUPS	DRP	DJR	DJR		7/2/12

RELIABLE
1300 Enterprise Road
Geneva, Alabama 36340
PHONE (334) 684-3621
FAX (334) 684-2832

PLOT SCALE
NONE

ECN:

TITLE
6375DC TEST AND
APPROVAL DRAWINGS

DWG. NO.
60-022283-00B

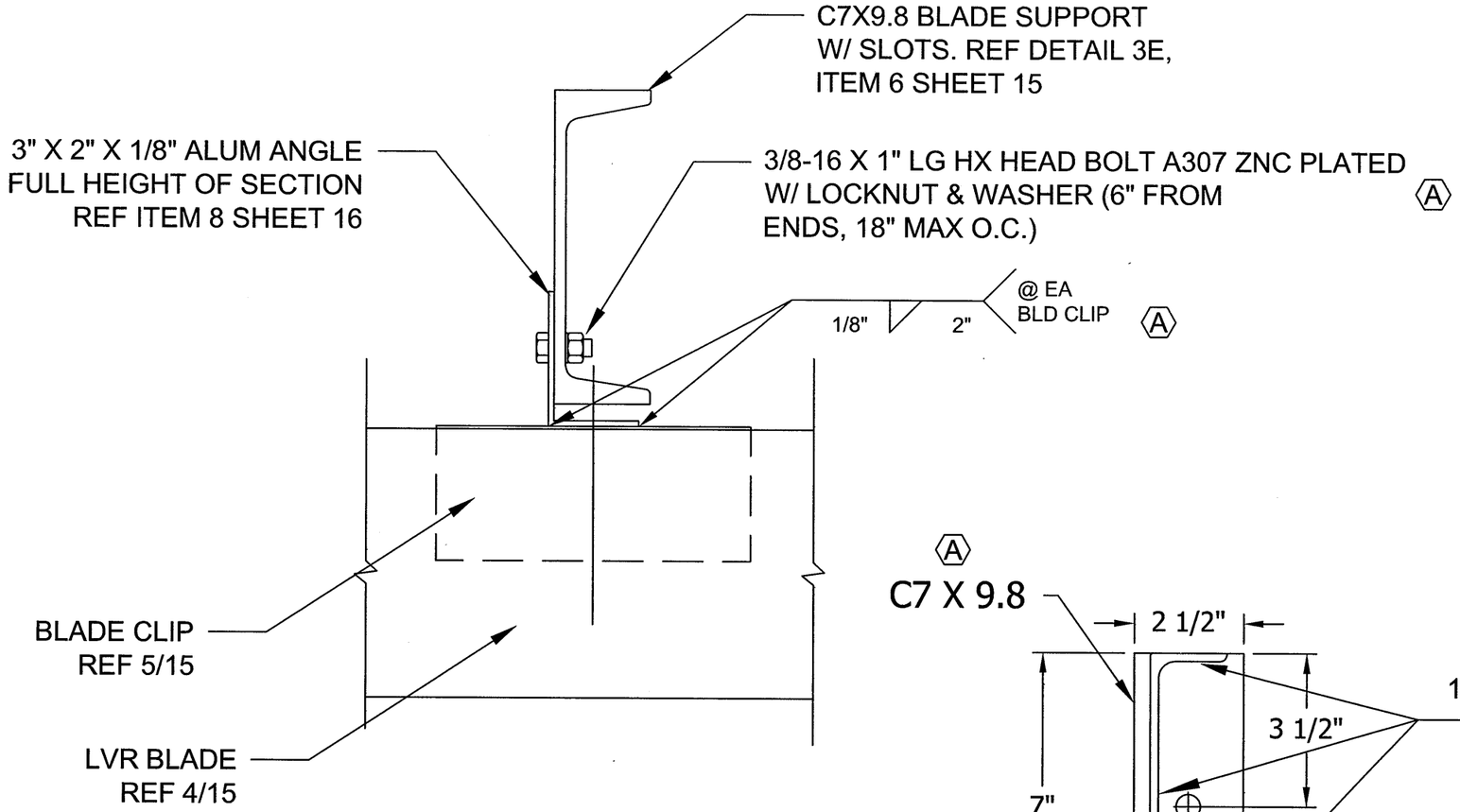

3 - BLADE SUPPORT DETAIL

N.T.S.

ENDPLATES NOT SHOWN FOR CLARITY

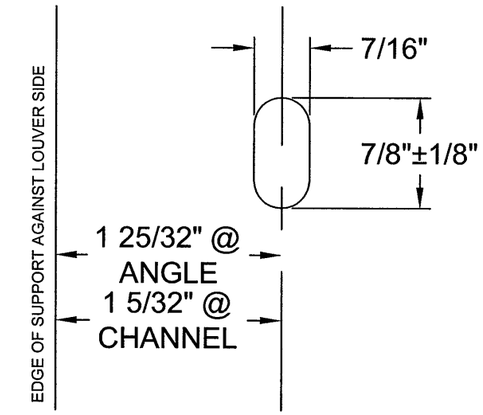

3E - SUPPORT SLOT DETAIL

N.T.S.

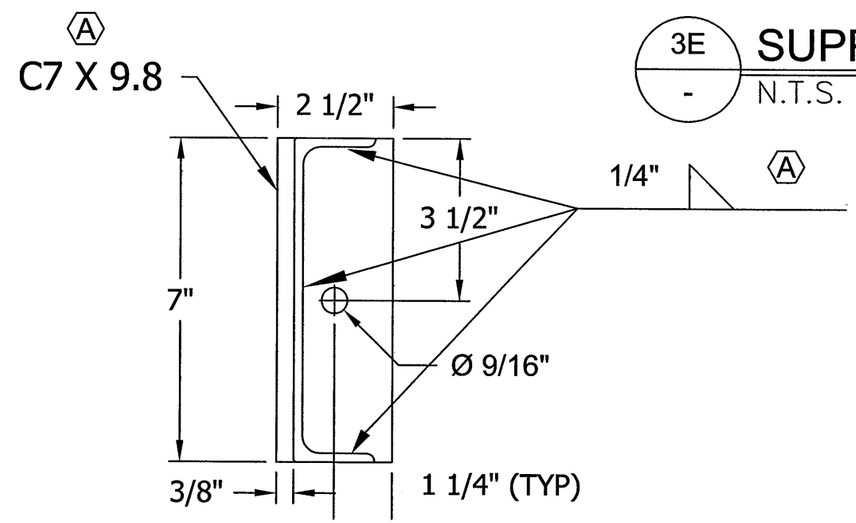

3A - SUPPORT END PLATE DETAIL(WOOD SUBSTRATE ONLY)

N.T.S.

END PLATE MAT'L: 1/4" THK A36 STL

ENGINEER OF RECORD	DAN RAU
ENGINEERING DISCIPLINE	CIVIL ENGINEERING
REGISTRATION NUMBER	FL# 63636

DANIEL J. RAU
LICENSE
NO. 63636
STATE OF
FLORIDA
PROFESSIONAL ENGINEER

7/5/2012

FOR OFFICE USE ONLY

FOR OFFICE USE ONLY

PRODUCT REVISED
as complying with the Florida
Building Code
Acceptance No 12-0607.01
Expiration Date 07/09/2016
By
Miami Dade Product Control

TOLERANCES
DECIMAL DIMENSIONS:
3 PLACE .XXX +.010
2 PLACE .XX +.020
FRACTION DIMENSIONS: + 1/16
ANGLE DIMENSIONS + 2°
USE WIQ-007 & 008
UNLESS SPECIFIED OTHERWISE

DWN. BY:	CHK. BY:	APPV'D. BY:	APPV'D. BY:
DJR	DRP	DRP	
DATE: 02/17/12	DATE: 3/23/12	DATE: 3/23/12	DATE:

SHEET 4 OF 20

CHANGE LETTER	REVISION DESCRIPTION	DWN. BY:	CHK'D. BY:	APPV'D. BY:	APPV'D. BY:	DATE
A	REVISED PER DADE CO. MARKUPS	DRP	DJR	DJR		7/2/12

RELIABLE
1300 Enterprise Road
Geneva, Alabama 36340
PHONE (334) 684-3621
FAX (334) 684-2832

PLOT SCALE: NONE

ECN:

TITLE: 6375DC TEST AND APPROVAL DRAWINGS

DWG. NO. 60-022283-00B

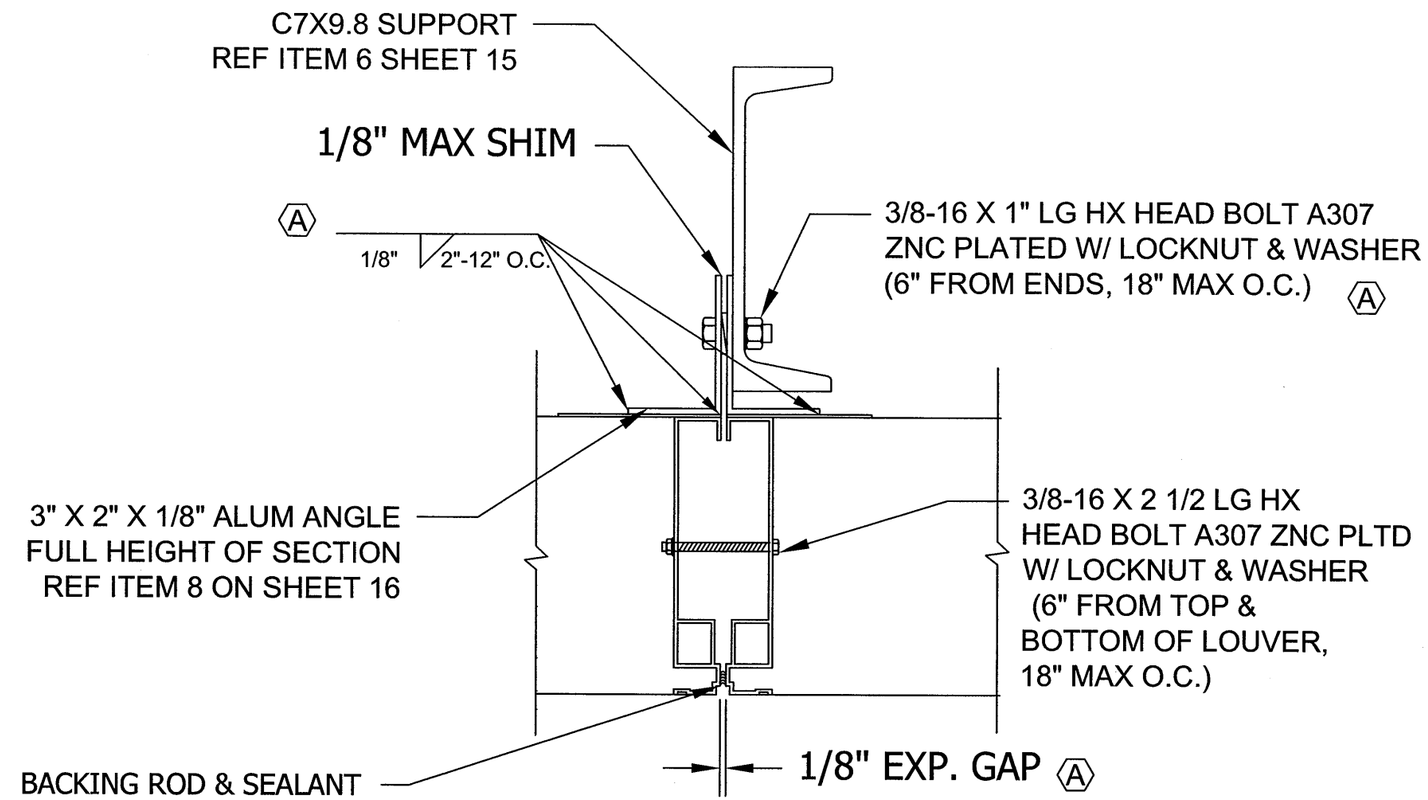

4 / - VISIBLE MULLION DETAIL

N.T.S.
END PLATE NOT SHOWN FOR CLARITY
REF 3A ON SHEET 4

ENGINEER OF RECORD	DAN RAU
ENGINEERING DISCIPLINE	CIVIL ENGINEERING
REGISTRATION NUMBER	FL# 63636

DANIEL J. RAU
LICENSE
NO. 63636
STATE OF FLORIDA
PROFESSIONAL ENGINEER
7/5/2012

FOR OFFICE USE ONLY

FOR OFFICE USE ONLY

PRODUCT REVISED
as complying with the Florida Building Code
Acceptance No 12-0607.01
Expiration Date 07/09/2016
By
Miami Dade Product Control

TOLERANCES
DECIMAL DIMENSIONS:
3 PLACE .XXX ± .010
2 PLACE .XX ± .020
FRACTION DIMENSIONS: ± 1/16
ANGLE DIMENSIONS ± 2°
USE WQ-007 & 008
UNLESS SPECIFIED OTHERWISE

DWN. BY:	CHK. BY:	APPV'D. BY:	APPV'D. BY:
DJR	DRP	DRP	
DATE: 02/17/12	DATE: 3/23/12	DATE: 3/23/12	DATE:

SHEET 5 OF 20

CHANGE LETTER	REVISION DESCRIPTION	DWN. BY:	CHK'D. BY:	APPV'D. BY:	APPV'D. BY:	DATE
A	REVISED PER DADE CO. MARKUPS	DRP	DJR	DJR		7/2/12

RELIABLE
1300 Enterprise Road
Geneva, Alabama 36340
PHONE (334) 684-3621
FAX (334) 684-2832

PLOT SCALE: NONE

ECN:

TITLE: 6375DC TEST AND APPROVAL DRAWINGS

DWG. NO. 60-022283-00B

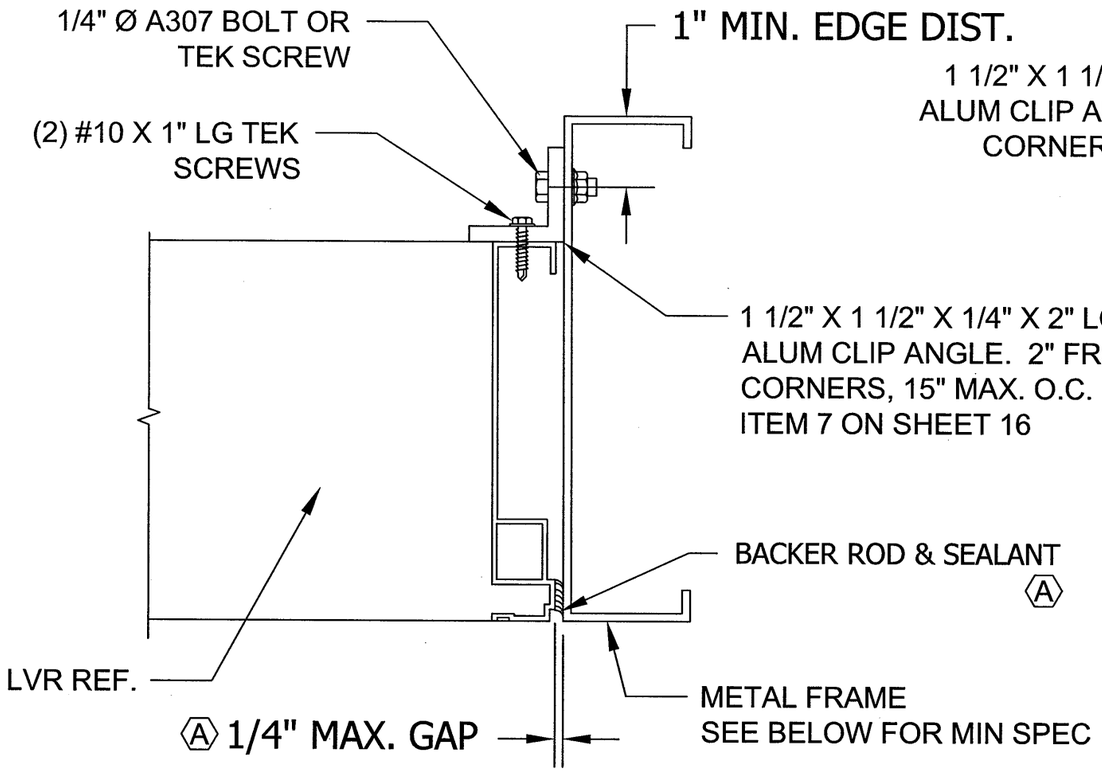

1A / - JAMB DET - METAL SUBSTRATE Ⓐ

N.T.S.
14 GA STEEL MIN. SUBSTRATE
1/8" THK ALUM MIN. SUBSTRATE

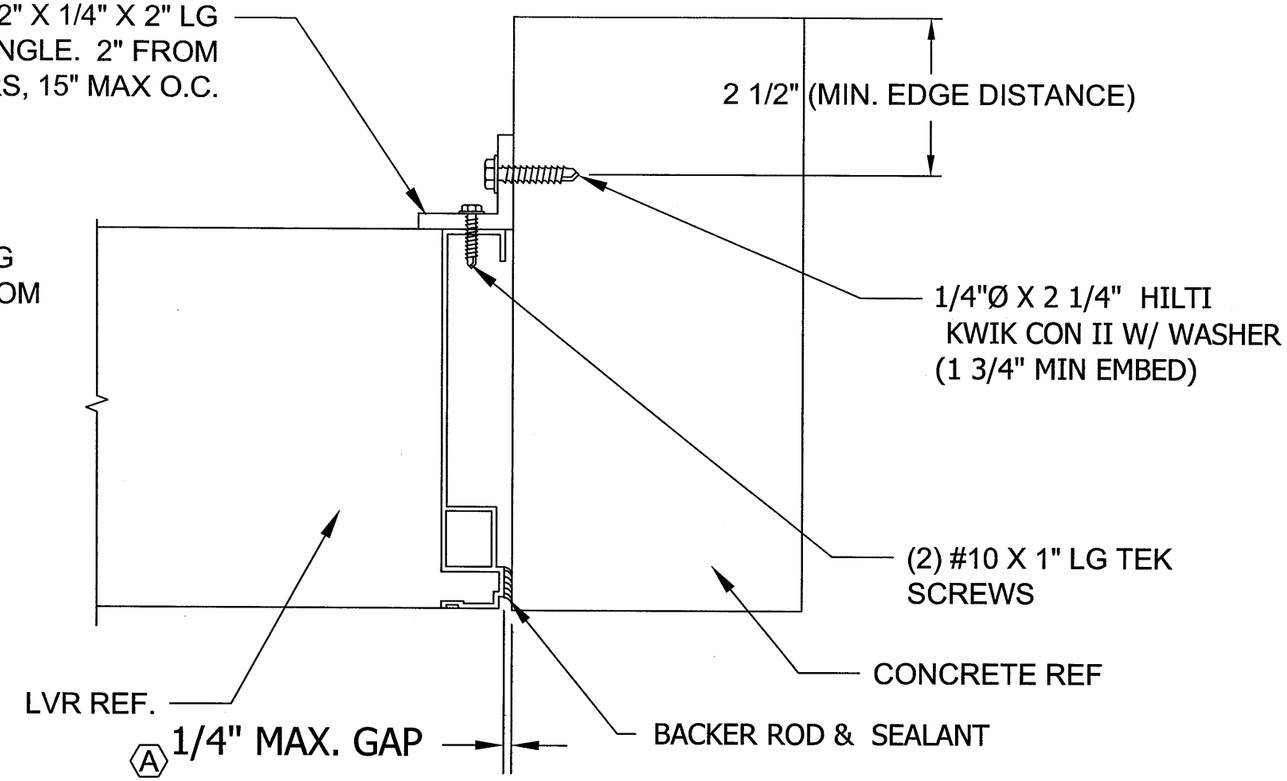

1B / - JAMB DET - CONCRETE

N.T.S.
3000 MIN COMPRESSIVE STRENGTH
NOTE EDGE DISTANCE REQUIREMENTS

ENGINEER OF RECORD
DAN RAU

ENGINEERING DISCIPLINE
CIVIL ENGINEERING

REGISTRATION NUMBER
FL# 63636

DANIEL J. RAU
LICENSE
NO. 63636
STATE OF FLORIDA
PROFESSIONAL ENGINEER
07/05/12

FOR OFFICE USE ONLY

FOR OFFICE USE ONLY

PRODUCT REVISED
as complying with the Florida Building Code
Acceptance No 12-0607.01
Expiration Date 07/09/2016
By
Miami Dade Product Control

TOLERANCES:
DECIMAL DIMENSIONS:
3 PLACE .XXX ±.010
2 PLACE .XX ±.021
FRACTION DIMENSIONS: ± 1/16
ANGLE DIMENSIONS ± 2°
USE WIC-007 & 008
UNLESS SPECIFIED OTHERWISE

DWN. BY: DJR	CHK. BY: DRP	APPV'D. BY: DRP	APPV'D. BY:
DATE: 02/17/12	DATE: 3/23/12	DATE: 3/23/12	DATE:

SHEET 6 OF 20

CHANGE LETTER	REVISION DESCRIPTION	DWN. BY:	CHK'D. BY:	APPV'D. BY:	APPV'D. BY:	DATE
Ⓐ	REVISED PER DADE CO. MARKUPS	DRP				7/2/12

RELIABLE
1300 Enterprise Road
Geneva, Alabama 36340
PHONE (334) 684-3621
FAX (334) 684-2832

PLOT SCALE: NONE

ECN:

TITLE: 6375DC TEST AND APPROVAL DRAWINGS

DWG. NO. 60-022283-00B

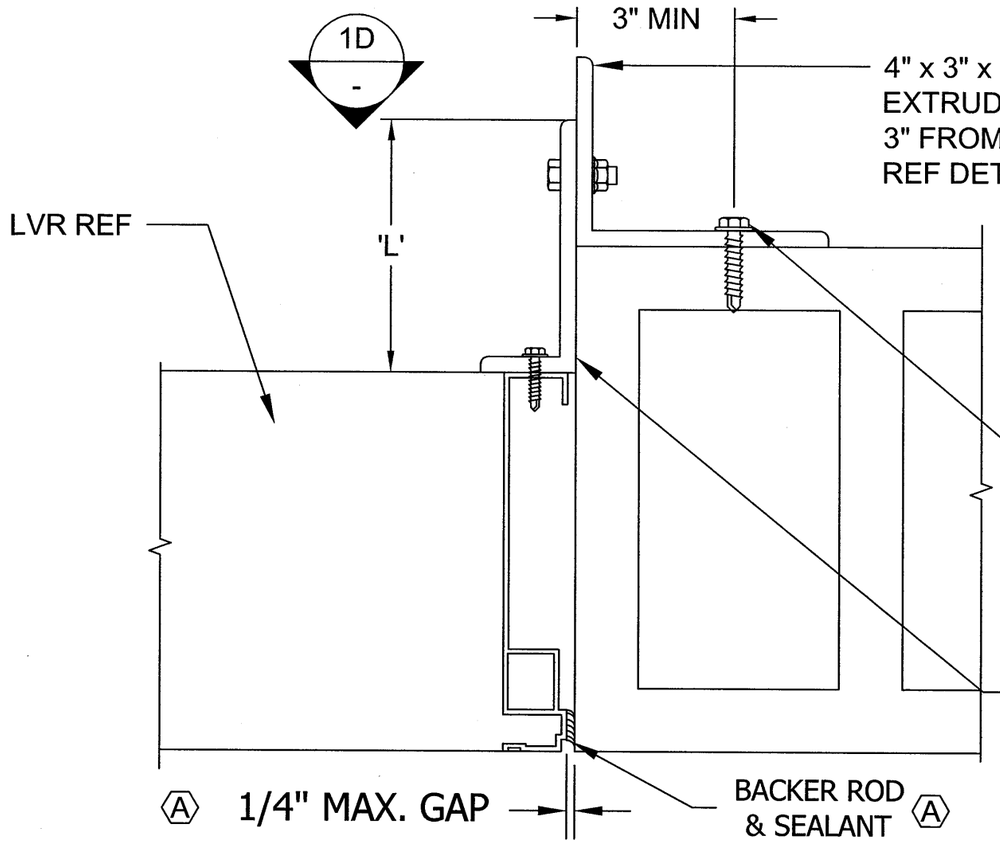

1C - JAMB DET - CMU

N.T.S.

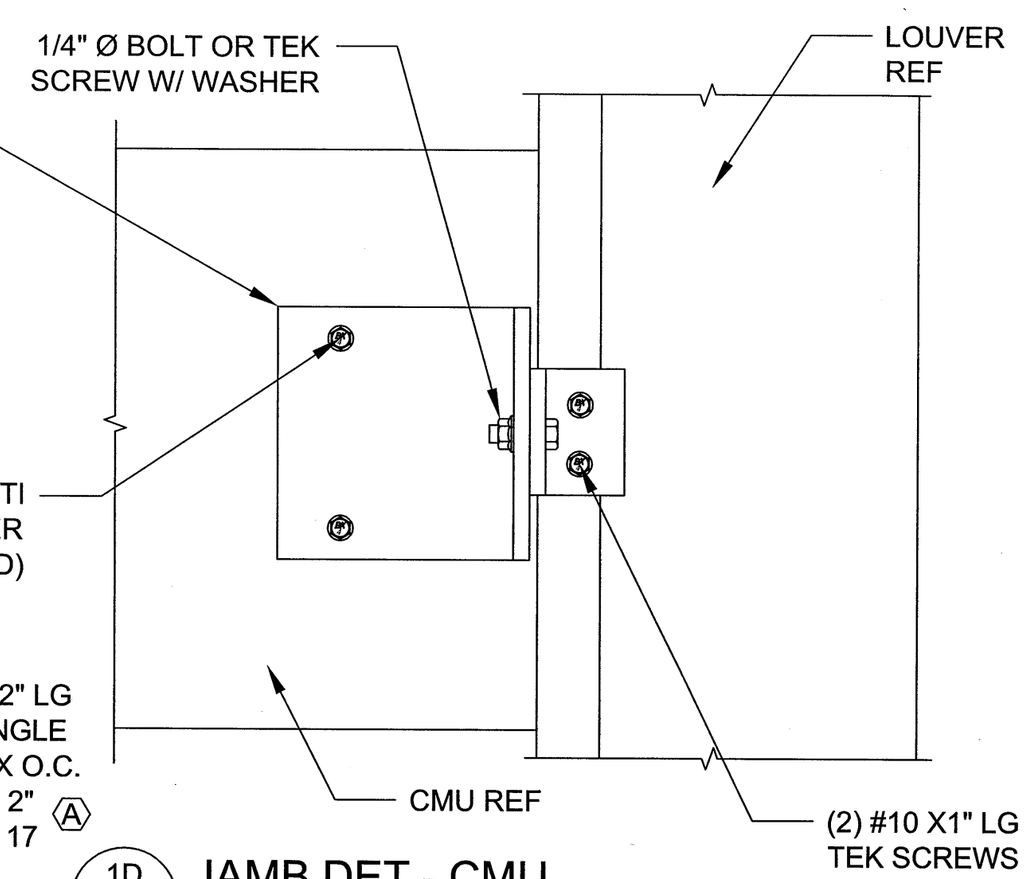

1D - JAMB DET - CMU

N.T.S.

MIN PRISM STR OF 1500 PSI AT INSTALLATION
TYPE I, GRADE N, LIGHT, MED, NORMAL WEIGHT ASTM C90
GROUT MUST COMPLY WITH FBC SECT 2103.12
TYPE N, S, OR M MORTAR PER FBC SECT 2103.8

ENGINEER OF RECORD	DAN RAU
ENGINEERING DISCIPLINE	CIVIL ENGINEERING
REGISTRATION NUMBER	FL# 63636

DANIEL J. RAU
LICENSE
NO. 63636
STATE OF
FLORIDA
PROFESSIONAL ENGINEER
7/5/2012

FOR OFFICE USE ONLY

FOR OFFICE USE ONLY

PRODUCT REVISED
as complying with the Florida
Building Code
Acceptance No 12-0607.01
Expiration Date 07/09/2016
By
Miami Dade Product Control

TOLERANCES
DECIMAL DIMENSIONS:
3 PLACE .XXX ± .010
2 PLACE .XX ± .020
FRACTION DIMENSIONS: ± 1/16
ANGLE DIMENSIONS ± 2°
USE WIQ-007 & 008
UNLESS SPECIFIED OTHERWISE

DWN. BY: DJR	CHK. BY: DRP	APPV'D. BY: DRP	APPV'D. BY:
DATE: 02/17/12	DATE: 3/23/12	DATE: 3/23/12	DATE:

SHEET 7 OF 20

CHANGE LETTER	REVISION DESCRIPTION	DWN. BY:	CHK'D. BY:	APPV'D. BY:	APPV'D. BY:	DATE
A	REVISED PER DADE CO. MARKUPS	DRP	DJR	DJR		7/2/12

RELIABLE
1300 Enterprise Road
Geneva, Alabama 36340
PHONE (334) 684-3621
FAX (334) 684-2832

PLOT SCALE: NONE

ECN:

TITLE: 6375DC TEST AND APPROVAL DRAWINGS

DWG. NO. 60-022283-00B

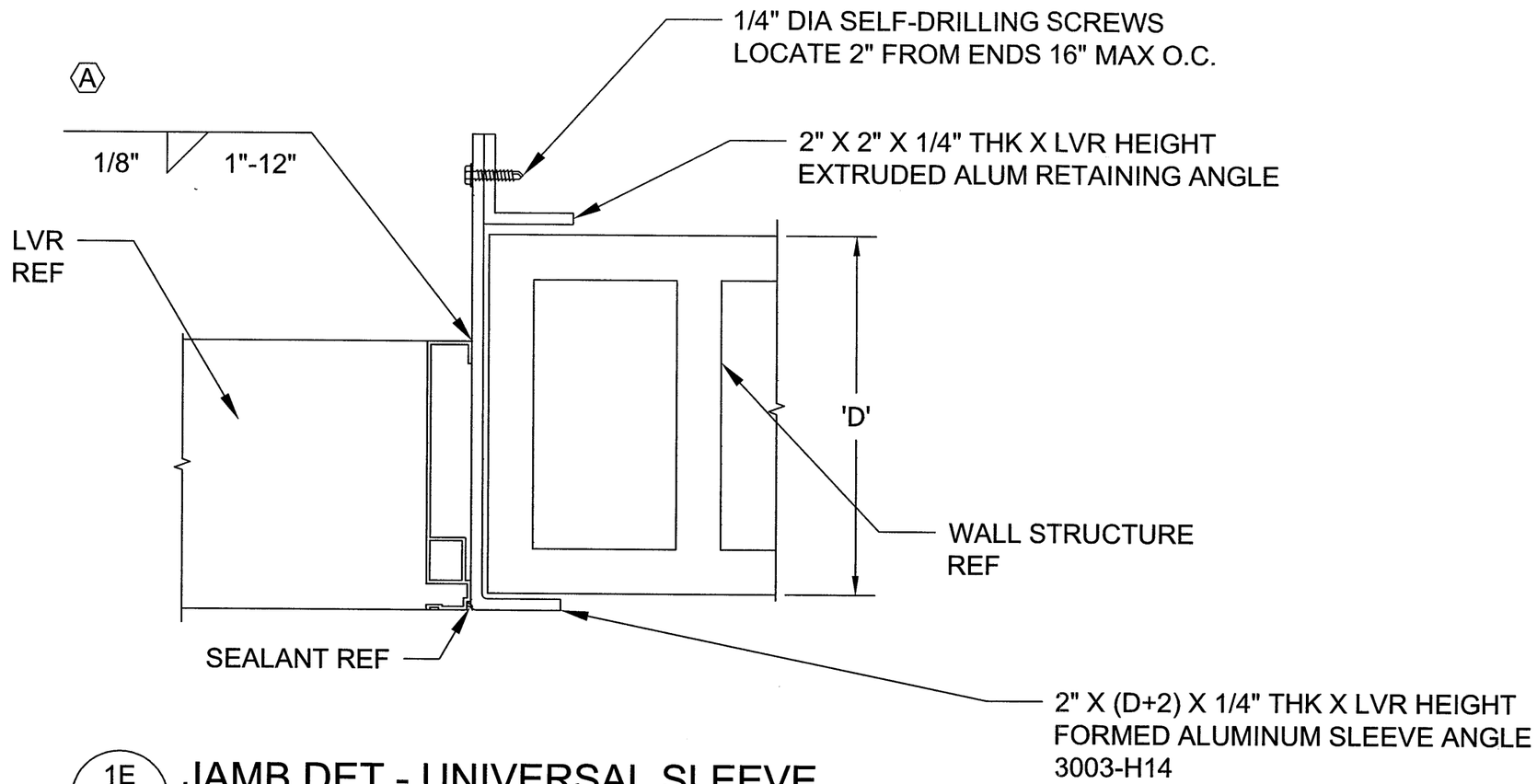

1E / - JAMB DET - UNIVERSAL SLEEVE

N.T.S.

ENGINEER OF RECORD	DAN RAU
ENGINEERING DISCIPLINE	CIVIL ENGINEERING
REGISTRATION NUMBER	FL# 63636

DANIEL J. RAU
LICENSE
NO. 63636
STATE OF
FLORIDA
PROFESSIONAL ENGINEER

7/5/2012

FOR OFFICE USE ONLY

FOR OFFICE USE ONLY

PRODUCT REVISED
as complying with the Florida
Building Code
Acceptance No 12-0607.01
Expiration Date 07/09/2016
By
Miami Dade Product Control

TOLERANCES
DECIMAL DIMENSIONS:
3 PLACE .XXX +.010
2 PLACE .XX +.020
FRACTION DIMENSIONS: + 1/16
ANGLE DIMENSIONS + 2°
USE WIQ-007 & 008
UNLESS SPECIFIED OTHERWISE

DWN. BY: DJR	CHK. BY: DRP	APPV'D. BY: DRP	APPV'D. BY:
DATE: 02/17/12	DATE: 3/23/12	DATE: 3/23/12	DATE:

SHEET 8 OF 20

CHANGE LETTER	REVISION DESCRIPTION	DWN. BY:	CHK'D. BY:	APPV'D. BY:	APPV'D. BY:	DATE
A	REVISED PER DADE CO. MARKUPS	DRP	DJR	DJR		7/2/12

RELIABLE
1300 Enterprise Road
Geneva, Alabama 36340
PHONE (334) 684-3621
FAX (334) 684-2832

PLOT SCALE: NONE

ECN:

TITLE: 6375DC TEST AND APPROVAL DRAWINGS

DWG. NO. 60-022283-00B

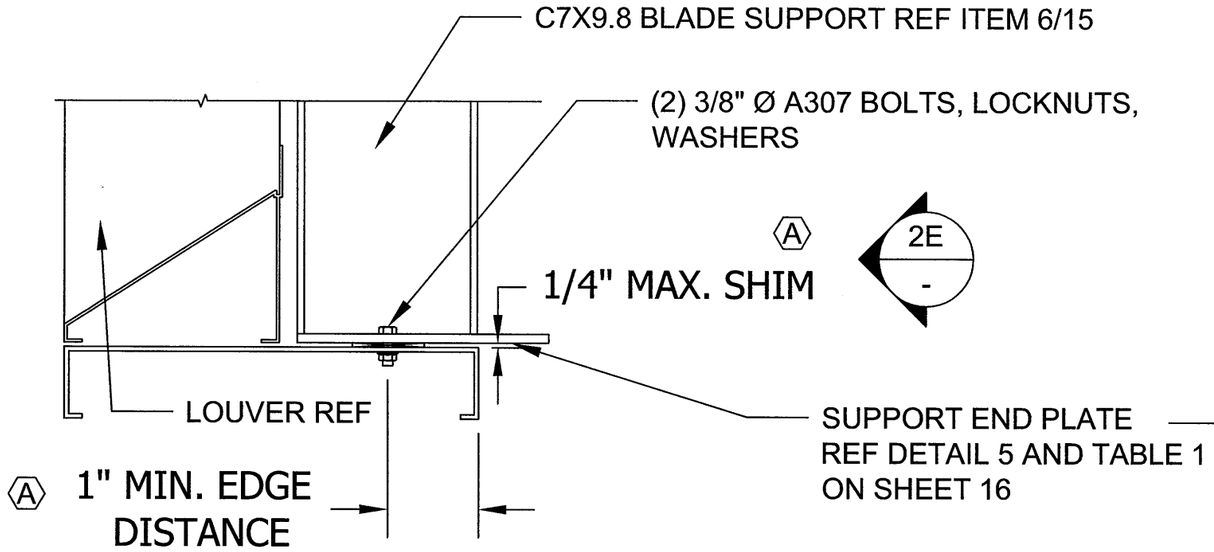

A

2A - SUPPORT ATTACHMENT - METAL SUBSTRATE

N.T.S.
14 GA STEEL MIN. SUBSTRATE THICKNESS
1/8" THICK ALUM MIN. SUBSTRATE THICKNESS
SILL SHOWN, HEAD SIM

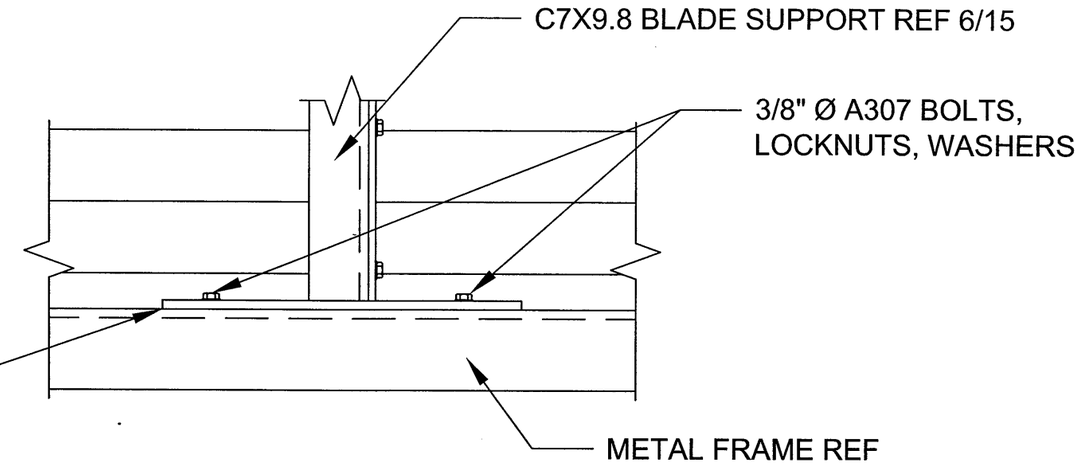

A

2E - SUPPORT ATTACHMENT - METAL SUBSTRATE

N.T.S.

ENGINEER OF RECORD	DAN RAU
ENGINEERING DISCIPLINE	CIVIL ENGINEERING
REGISTRATION NUMBER	FL# 63636

DANIEL J. RAU
LICENSE NO. 63636
STATE OF FLORIDA
PROFESSIONAL ENGINEER
07/05/2012

FOR OFFICE USE ONLY

FOR OFFICE USE ONLY

PRODUCT REVISED
as complying with the Florida Building Code
Acceptance No 12-0607.01
Expiration Date 07/09/2016
By
Miami Dade Product Control

TOLERANCES
DECIMAL DIMENSIONS:
3 PLACE .XXX +.010
2 PLACE .XX +.020
FRACTION DIMENSIONS: + 1/16
ANGLE DIMENSIONS + 2°
USE WIQ-007 & 008
UNLESS SPECIFIED OTHERWISE

DWN. BY: DJR	CHK. BY: DRP	APPV'D. BY: DRP	APPV'D. BY:
DATE: 02/17/12	DATE: 3/23/12	DATE: 3/23/12	DATE:

SHEET 9 OF 20

CHANGE LETTER	REVISION DESCRIPTION	DWN. BY:	CHK'D. BY:	APPV'D. BY:	APPV'D. BY:	DATE
A	REVISED PER DADE CO. MARKUPS	DRP				7/2/12

RELIABLE
1300 Enterprise Road
Geneva, Alabama 36340
PHONE (334) 684-3621
FAX (334) 684-2832

PLOT SCALE: NONE

ECN:

TITLE: 6375DC TEST AND APPROVAL DRAWINGS

DWG. NO. 60-022283-00B

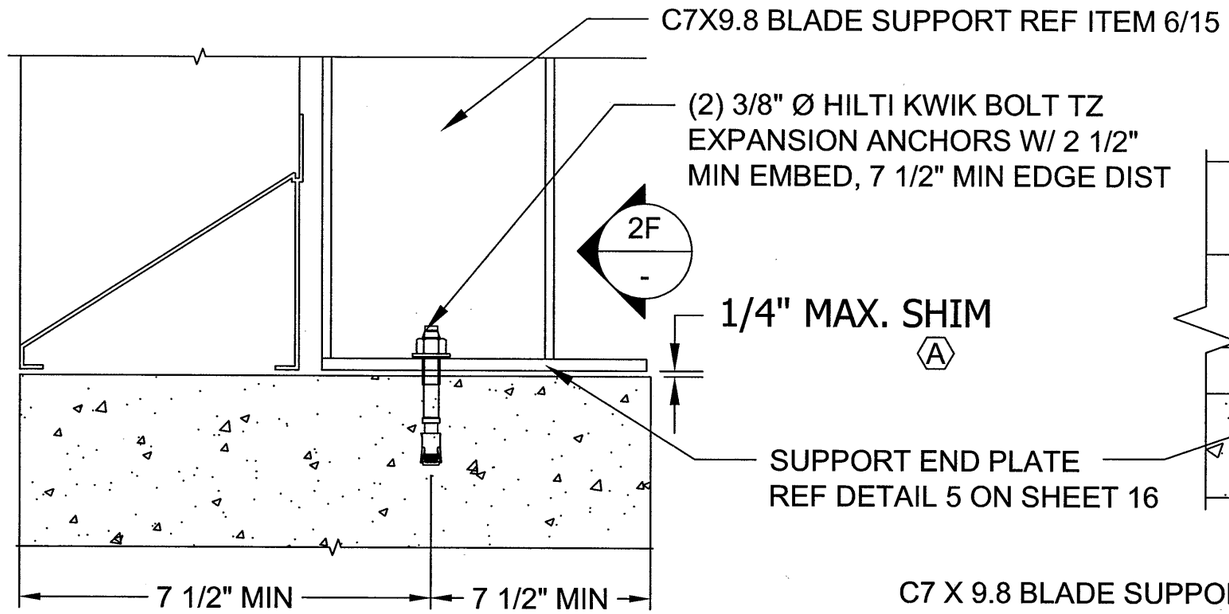

2B / - SUPPORT ATTACHMENT - CONCRETE SLAB

N.T.S.
3000 PSI MIN CONCRETE
NOTE EDGE DIST REQUIREMENTS

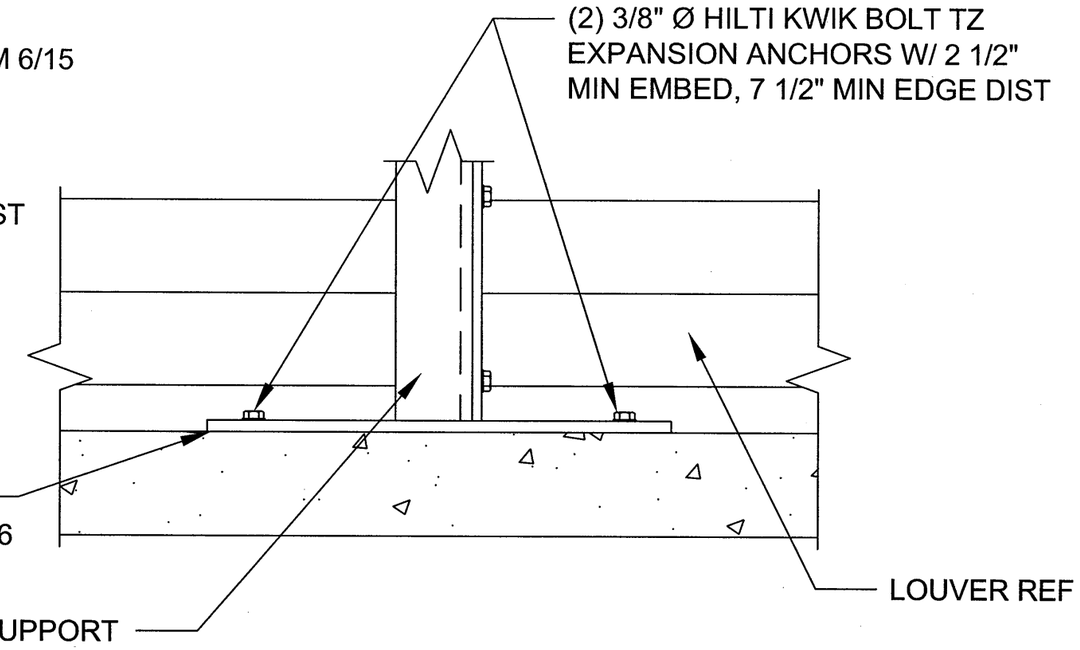

2F / - SUPPORT ATTACHMENT - CONCRETE SLAB

N.T.S.

ENGINEER OF RECORD
DAN RAU
ENGINEERING DISCIPLINE
CIVIL ENGINEERING
REGISTRATION NUMBER
FL# 63636

DANIEL J. RAU
LICENSE
NO. 63636
STATE OF
FLORIDA
PROFESSIONAL ENGINEER
7/5/2012

FOR OFFICE USE ONLY

FOR OFFICE USE ONLY

PRODUCT REVISED
as complying with the Florida
Building Code
Acceptance No 12-0607.01
Expiration Date 07/07/2016
By
Miami Dade Product Control

TOLERANCES
DECIMAL DIMENSIONS:
3 PLACE .XXX ± .010
2 PLACE .XX ± .020
FRACTION DIMENSIONS: ± 1/16
ANGLE DIMENSIONS ± 2°
USE WIQ-007 & 008
UNLESS SPECIFIED OTHERWISE

DWN. BY: DJR	CHK. BY: DRP	APPV'D. BY: DRP	APPV'D. BY:
DATE: 02/17/12	DATE: 3/23/12	DATE: 3/23/12	DATE:

SHEET 10 OF 20

CHANGE LETTER	REVISION DESCRIPTION	DWN. BY:	CHK'D. BY:	APPV'D. BY:	APPV'D. BY:	DATE
A	REVISED PER DADE CO. MARKUPS	DRP	DJR	DJR		7/2/12

RELIABLE
1300 Enterprise Road
Geneva, Alabama 36340
PHONE (334) 684-3621
FAX (334) 684-2832

PLOT SCALE: NONE

ECN:

TITLE: 6375DC TEST AND APPROVAL DRAWINGS

DWG. NO. 60-022283-00B

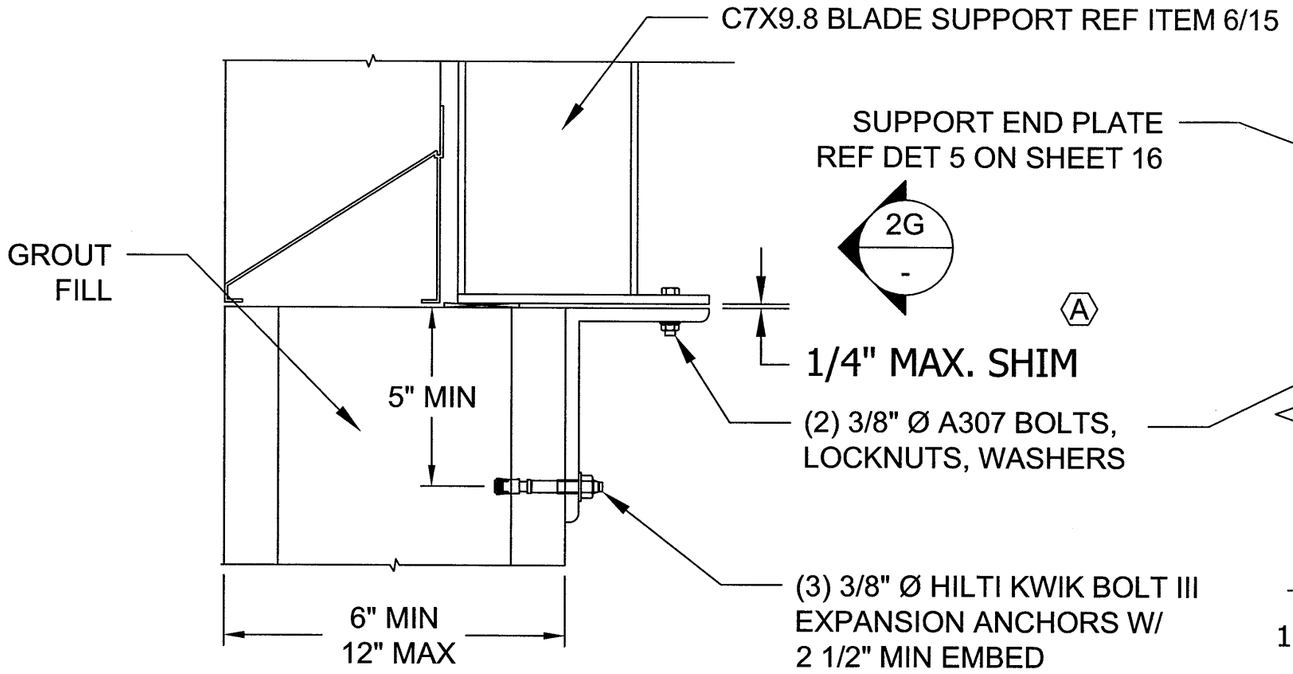

2C - SUPPORT ATTACHMENT 6",8",10",12" - CMU BLOCK

N.T.S.

MIN PRISM STR OF 1500 PSI AT INSTALLATION
TYPE I, N, LIGHT, MED, NORMAL WEIGHT ASTM C90
GROUT MUST COMPLY WITH FBC SECT 2103.12
TYPE N, S, OR M MORTAR PER FBC SECT 2103.8

A

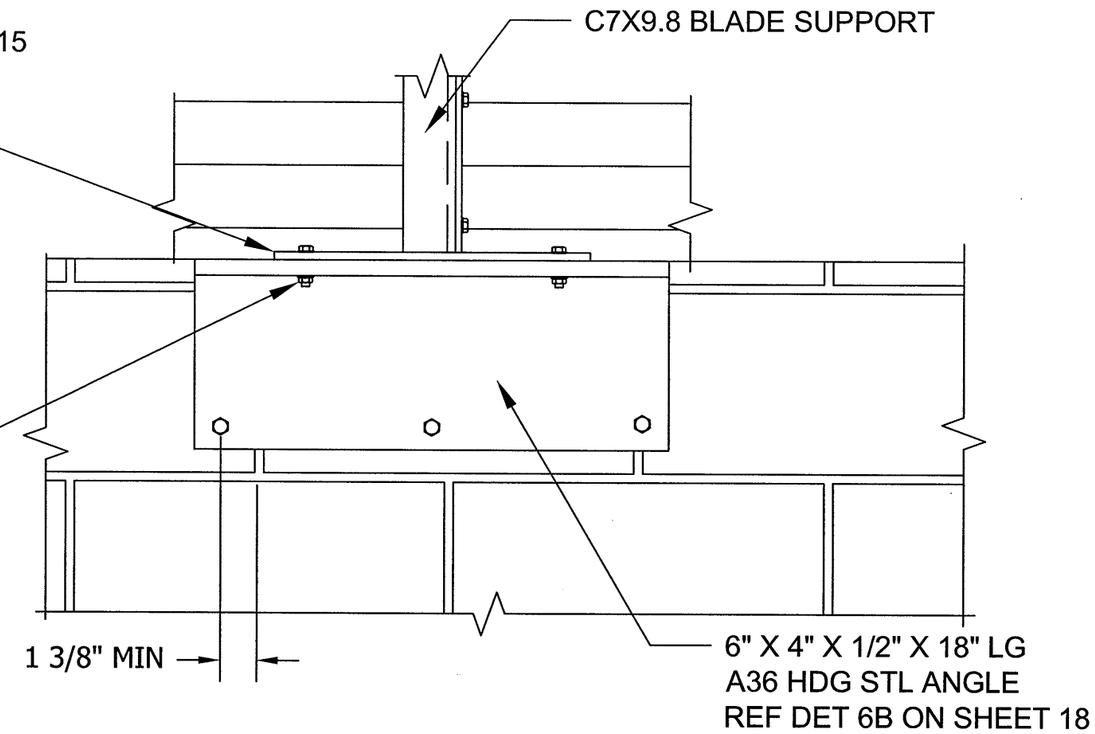

2G - SUPPORT ATTACHMENT - CMU BLOCK

N.T.S.

ENGINEER OF RECORD	DAN RAU
ENGINEERING DISCIPLINE	CIVIL ENGINEERING
REGISTRATION NUMBER	FL# 63636

DANIEL J. RAU
LICENSE
NO. 63636
STATE OF
FLORIDA
PROFESSIONAL ENGINEER
7/5/2012

FOR OFFICE USE ONLY

FOR OFFICE USE ONLY

PRODUCT REVISED
as complying with the Florida
Building Code
Acceptance No 12-0607.01
Expiration Date 07/09/2016
By
Miami Dade Product Control

TOLERANCES
DECIMAL DIMENSIONS:
3 PLACE .XXX +.010
2 PLACE .XX +.020
FRACTION DIMENSIONS: + 1/16
ANGLE DIMENSIONS + 2°
USE WIQ-007 & 008
UNLESS SPECIFIED OTHERWISE

DWN. BY: DJR	CHK. BY: DRP	APPV'D. BY: DRP	APPV'D. BY:
DATE: 02/17/12	DATE: 3/23/12	DATE: 3/23/12	DATE:

SHEET 11 OF 20

CHANGE LETTER	REVISION DESCRIPTION	DWN. BY:	CHK'D. BY:	APPV'D. BY:	APPV'D. BY:	DATE
A	REVISED PER DADE CO. MARKUPS	DRP	DJR	DJR		7/2/12

RELIABLE
1300 Enterprise Road
Geneva, Alabama 36340
PHONE (334) 684-3621
FAX (334) 684-2832

PLOT SCALE: NONE

ECN:

TITLE: 6375DC TEST AND APPROVAL DRAWINGS

DWG. NO. 60-022283-00B

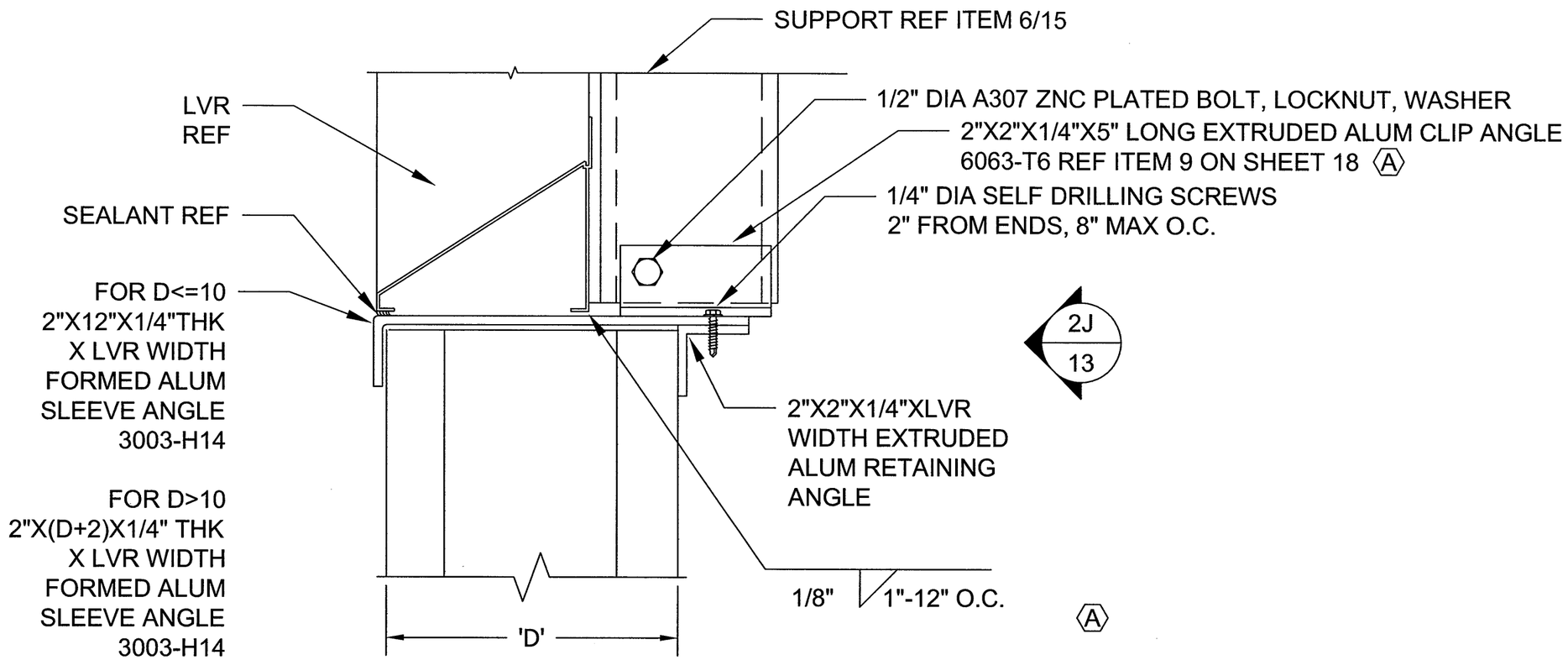

2H / - SUPPORT ATTACHMENT - UNIVERSAL SLEEVE

N.T.S.

ENGINEER OF RECORD
DAN RAU

ENGINEERING DISCIPLINE
CIVIL ENGINEERING

REGISTRATION NUMBER
FL# 63636

DANIEL J. RAU
LICENSE NO. 63636
STATE OF FLORIDA
PROFESSIONAL ENGINEER
7/5/2012

FOR OFFICE USE ONLY

FOR OFFICE USE ONLY

PRODUCT REVISED
as complying with the Florida Building Code
Acceptance No 12-0607.01
Expiration Date 07/09/2016
By
Miami Dade Product Control

TOLERANCES
DECIMAL DIMENSIONS:
3 PLACE .XXX ± .010
2 PLACE .XX ± .020
FRACTION DIMENSIONS: ± 1/16
ANGLE DIMENSIONS ± 2°
USE WIQ-007 & 008
UNLESS SPECIFIED OTHERWISE

DWN. BY: DJR	CHK. BY: DRP	APPV'D. BY: DRP	APPV'D. BY:
DATE: 02/17/12	DATE: 3/23/12	DATE: 3/23/12	DATE:

SHEET 12 OF 20

CHANGE LETTER	REVISION DESCRIPTION	DWN. BY:	CHK'D. BY:	APPV'D. BY:	APPV'D. BY:	DATE
(A)	REVISED PER DADE CO. MARKUPS	DRP	DJR	DJR		7/2/12

RELIABLE
1300 Enterprise Road
Geneva, Alabama 36340
PHONE (334) 684-3621
FAX (334) 684-2832

PLOT SCALE
NONE

ECN:

TITLE
6375DC TEST AND APPROVAL DRAWINGS

DWG. NO.
60-022283-00B

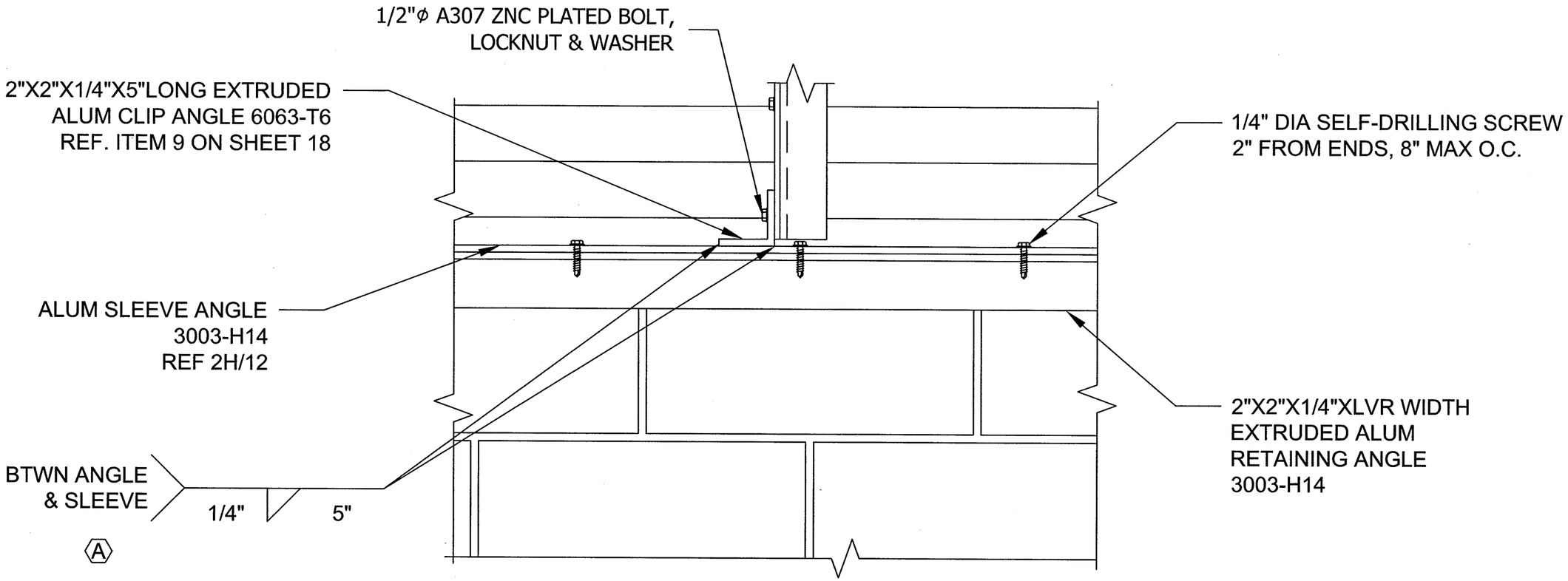

2J / - SUPPORT ATTACHMENT - CMU BLOCK

N.T.S.

ENGINEER OF RECORD
DAN RAU

ENGINEERING DISCIPLINE
CIVIL ENGINEERING

REGISTRATION NUMBER
FL# 63636

DANIEL J. RAU
LICENSE
NO. 63636
STATE OF
FLORIDA
PROFESSIONAL ENGINEER
7/5/2012

FOR OFFICE USE ONLY

FOR OFFICE USE ONLY

PRODUCT REVISED
is complying with the Florida
Building Code
Acceptance No 12-0607.01
Expiration Date 07/09/2016
By
Miami Dade Product Control

TOLERANCES
DECIMAL DIMENSIONS:
3 PLACE .XXX ±.010
2 PLACE .XX ±.020
FRACTION DIMENSIONS: ± 1/16
ANGLE DIMENSIONS ± 2°
USE WIC-007 & 008
UNLESS SPECIFIED OTHERWISE

DWN. BY: DJR	CHK. BY: DRP	APPV'D. BY: DRP	APPV'D. BY:
DATE: 02/17/12	DATE: 3/23/12	DATE: 3/23/12	DATE:

SHEET 13 OF 20

CHANGE LETTER	REVISION DESCRIPTION	DWN. BY:	CHK'D. BY:	APPV'D. BY:	APPV'D. BY:	DATE
A	REVISED PER DADE CO. MARKUPS	DRP	DJR	DJR		7/2/12

RELIABLE
1300 Enterprise Road
Geneva, Alabama 36340
PHONE (334) 684-3621
FAX (334) 684-2832

PLOT SCALE
NONE

ECN:

TITLE
6375DC TEST AND
APPROVAL DRAWINGS

DWG. NO.
60-022283-00B

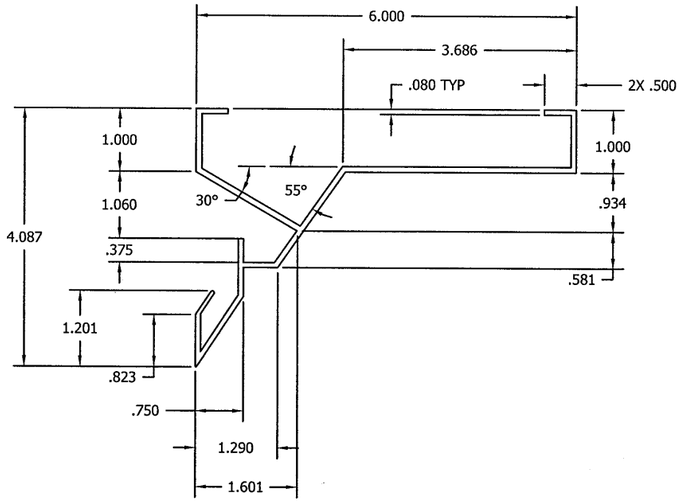

ITEM 1 - HEAD FRAME

6375DC

N.T.S.
.080 THK 6063-T5 ALUM
RUSKIN NO. 70-020578-00B

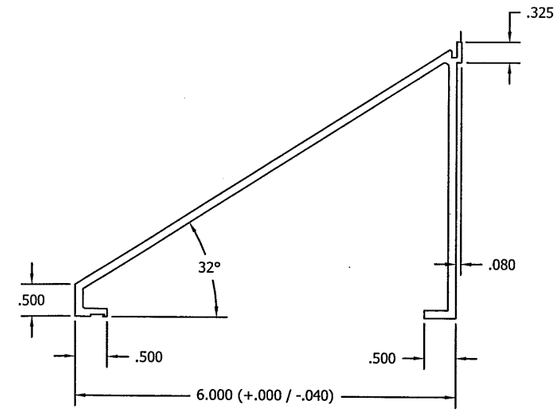

ITEM 2 - SILL FRAME

6375DC

N.T.S.
.125 THK 6063-T5 ALUM
RUSKIN NO. 70-021130-00B

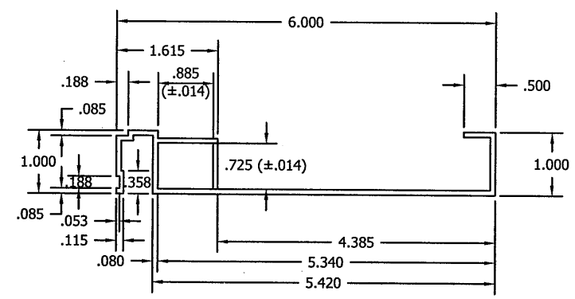

ITEM 3 - JAMB FRAME

6375DC

N.T.S.
.080 THK 6063-T5 ALUM
RUSKIN NO. 70-020382-00B

ENGINEER OF RECORD	DAN RAU
ENGINEERING DISCIPLINE	CIVIL ENGINEERING
REGISTRATION NUMBER	FL# 63636

DANIEL J. RAU
LICENSE
NO. 63636
STATE OF
FLORIDA
PROFESSIONAL ENGINEER

7/5/2012

FOR OFFICE USE ONLY

FOR OFFICE USE ONLY

PRODUCT REVISED
as complying with the Florida Building Code
Acceptance No 12-0607.01
Expiration Date 07/09/2016
By
Miami Dade Product Control

TOLERANCES
DECIMAL DIMENSIONS:
3 PLACE .XXX ± .010
2 PLACE .XX ± .020
FRACTION DIMENSIONS: ± 1/16
ANGLE DIMENSIONS ± 2°
USE WIQ-007 & 008
UNLESS SPECIFIED OTHERWISE

DWN. BY:	CHK. BY:	APPV'D. BY:	APPV'D. BY:
DJR	DRP	DRP	
DATE: 02/17/12	DATE: 3/23/12	DATE: 3/23/12	DATE:

SHEET 14 OF 20

CHANGE LETTER	REVISION DESCRIPTION	DWN. BY:	CHK'D. BY:	APPV'D. BY:	APPV'D. BY:	DATE
A	REVISED PER DADE CO. MARKUPS	DRP	DJR	DJR		7/2/12

RELIABLE
1300 Enterprise Road
Geneva, Alabama 36340
PHONE (334) 684-3621
FAX (334) 684-2832

PLOT SCALE: NONE

ECN:

TITLE: 6375DC TEST AND APPROVAL DRAWINGS

DWG. NO. 60-022283-00B

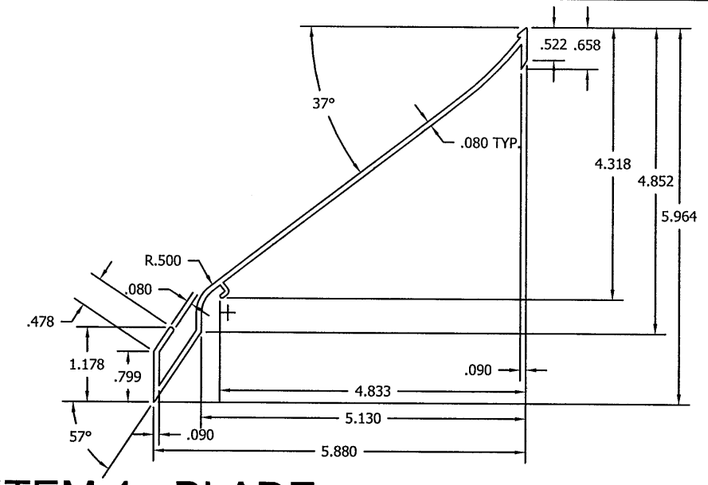

ITEM 4 - BLADE

6375DC

N.T.S.
.080 THK 6063-T5 ALUM
RUSKIN NO. 70-020382-00B

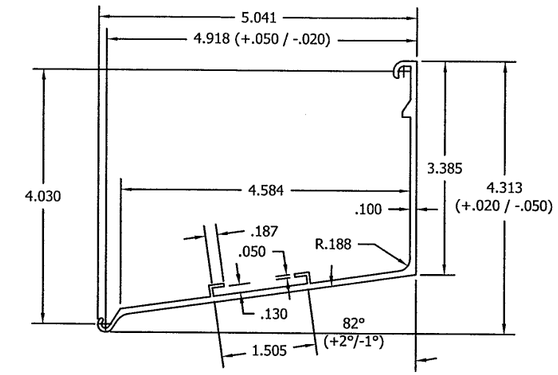

ITEM 5 - BLADE BRACE

6375DC

N.T.S.
.080 THK 6063-T5 ALUM
RUSKIN NO. 70-020568-00B

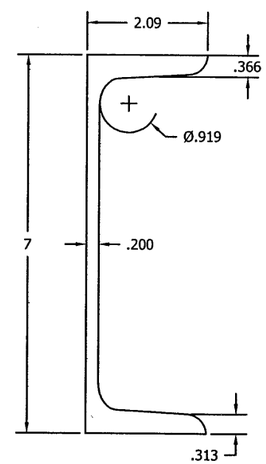

ITEM 6 - REAR SUPPORT CHANNEL C7x9.8

6375DC

N.T.S.
HDG A36 STEEL
USED FOR LOUVER HEIGHTS OVER 111" TO 119.75"
REF SHEET 19 & 20 FOR ALTERNATE SUPPORTS

CHANGE LETTER	REVISION DESCRIPTION	DWN. BY:	CHK'D. BY:	APPV'D. BY:	APPV'D. BY:	DATE
A	REVISED PER DADE CO. MARKUPS	DRP	DJR	DJR		7/2/12

ENGINEER OF RECORD
DAN RAU
ENGINEERING DISCIPLINE
CIVIL ENGINEERING
REGISTRATION NUMBER
FL# 63636

DANIEL J. RAU
LICENSE
NO. 63636
STATE OF FLORIDA
PROFESSIONAL ENGINEER
7/5/2012

FOR OFFICE USE ONLY

FOR OFFICE USE ONLY

PRODUCT REVISED
as complying with the Florida Building Code
Acceptance No 12-0607.01
Expiration Date 07/09/2016
By
Miami-Dade Product Control

TOLERANCES
DECIMAL DIMENSIONS:
3 PLACE .XXX ±.010
2 PLACE .XX ±.020
FRACTION DIMENSIONS: ± 1/16
ANGLE DIMENSIONS ± 2°
USE WIQ-007 & 008
UNLESS SPECIFIED OTHERWISE

DWN. BY: DJR	CHK. BY: DRP	APPV'D. BY: DRP	APPV'D. BY:
DATE: 02/17/12	DATE: 3/23/12	DATE: 3/23/12	DATE:

SHEET 15 OF 20

RELIABLE
1300 Enterprise Road
Geneva, Alabama 36340
PHONE (334) 684-3621
FAX (334) 684-2832

PLOT SCALE
NONE

ECN:

TITLE
6375DC TEST AND APPROVAL DRAWINGS

DWG. NO.
60-022283-00B

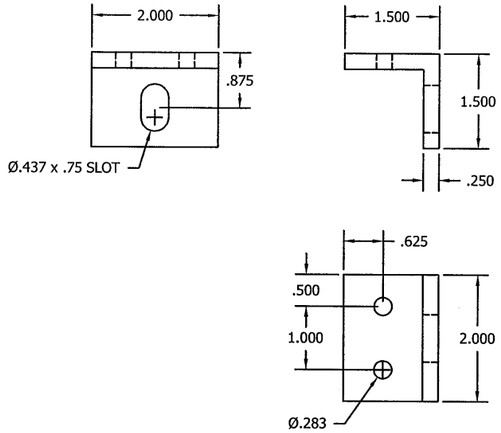

ITEM 7 - CLIP ANGLE

6375DC

N.T.S.
MAT'L: ALUM 5052-H32 OR 6063-T6
RUSKIN #: 85-021637-00B

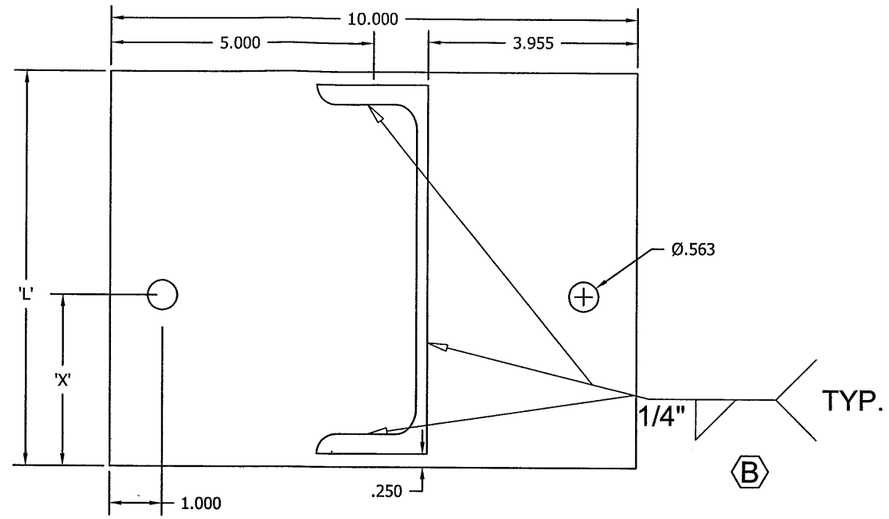

TABLE 1 - END PLATE DIMENSIONS

WALL DEPTH	L	X
CONCRETE SLAB	7.5	2.750
6" CMU	7.5	2.385
8" CMU	7.5	4.385
10" CMU	7.5	6.385
12" CMU	9.5	8.385

5 C7X9.8 END PLATE

6375DC

N.T.S.
MAT'L: 1/4" THK A36 HDG STL
SHEETS 09,10,11
SEE DET 2A, 2B, 2C FOR ALTERNATE SUPPORTS

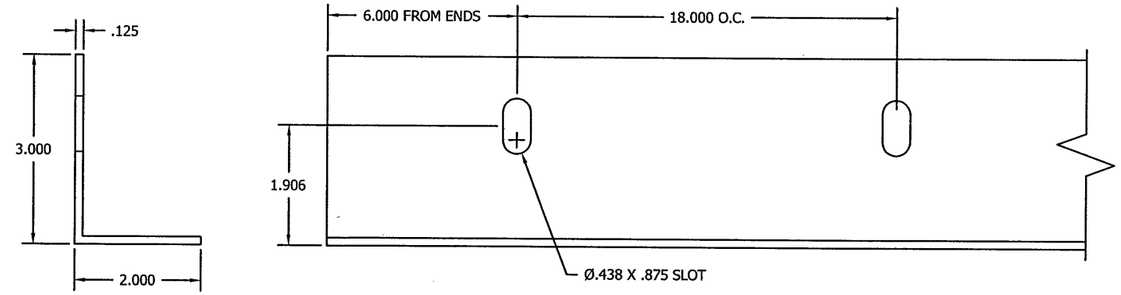

ITEM 8 - REAR SUPPORT ATTACHMENT ANGLE

6375DC

N.T.S.
6063-T5 AL EXTRUDED ALUM

ENGINEER OF RECORD
DAN RAU
ENGINEERING DISCIPLINE
CIVIL ENGINEERING
REGISTRATION NUMBER
FL# 63636

DANIEL J. RAU
LICENSE
NO. 63636
STATE OF FLORIDA
PROFESSIONAL ENGINEER
7/5/2012

FOR OFFICE USE ONLY

FOR OFFICE USE ONLY

PRODUCT REVISED
as complying with the Florida Building Code
Acceptance No 12-0607.01
Expiration Date 07/09/2016
By
Miami Dade Product Control

TOLERANCES
DECIMAL DIMENSIONS:
3 PLACE .XXX ± .010
2 PLACE .XX ± .020
FRACTION DIMENSIONS ± 1/16
ANGLE DIMENSIONS ± 2°
USE WQ-007 & 008
UNLESS SPECIFIED OTHERWISE

DWN. BY: DJR	CHK. BY: DRP	APPV'D. BY: DRP	APPV'D. BY:
DATE: 02/17/12	DATE: 3/23/12	DATE: 3/23/12	DATE:

SHEET 16 OF 20

CHANGE LETTER	REVISION DESCRIPTION	DWN. BY:	CHK'D. BY:	APPV'D. BY:	APPV'D. BY:	DATE
A	REVISED PER DADE CO. MARKUPS	DRP	DJR	DJR		7/2/12

RELIABLE
1300 Enterprise Road
Geneva, Alabama 36340
PHONE (334) 684-3621
FAX (334) 684-2832

PLOT SCALE: NONE

ECN:

TITLE: 6375DC TEST AND APPROVAL DRAWINGS

DWG. NO. 60-022283-00B

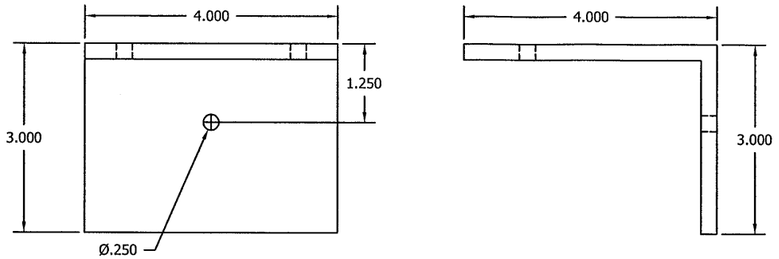

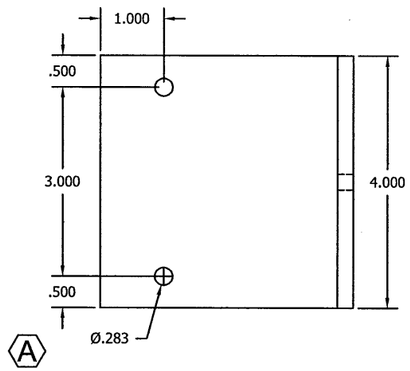

6 - ATTACHMENT ANGLE (CMU) 6375DC

N.T.S.
MAT'L: ALUM 6063-T6

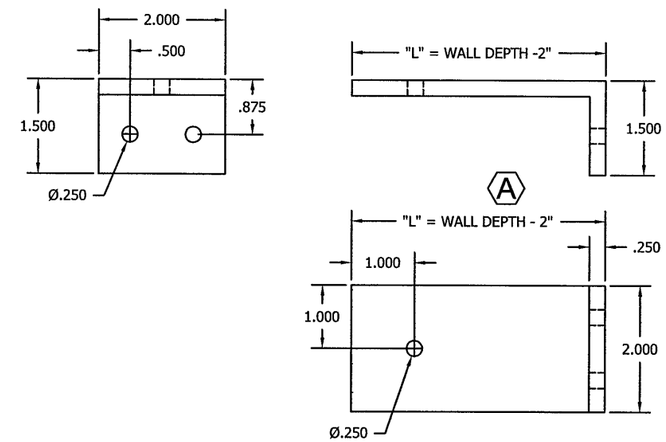

6A - ATTACHMENT ANGLE (CMU) 6375DC

N.T.S.
MAT'L: ALUM 3003-H14

ENGINEER OF RECORD
DAN RAU
ENGINEERING DISCIPLINE
CIVIL ENGINEERING
REGISTRATION NUMBER
FL# 63636

DANIEL J. RAU
LICENSE
NO. 63636
STATE OF FLORIDA
PROFESSIONAL ENGINEER
7/5/2012

FOR OFFICE USE ONLY

FOR OFFICE USE ONLY

PRODUCT REVISED
as complying with the Florida Building Code
Acceptance No 12-0607.01
Expiration Date 07/09/2016
By
Miami Dade Product Control

TOLERANCES
DECIMAL DIMENSIONS:
3 PLACE .XXX ± .010
2 PLACE .XX ± .020
FRACTION DIMENSIONS: ± 1/16
ANGLE DIMENSIONS ± 2°
USE WIQ-007 & 008
UNLESS SPECIFIED OTHERWISE

DWN. BY: DJR	CHK. BY: DRP	APPV'D. BY: DRP	APPV'D. BY:
DATE: 02/17/12	DATE: 3/23/12	DATE: 3/23/12	DATE:

SHEET 17 OF 20

CHANGE LETTER	REVISION DESCRIPTION	DWN. BY:	CHK'D. BY:	APPV'D. BY:	APPV'D. BY:	DATE
A	REVISED PER DADE CO. MARKUPS	DRP	DJR	DJR		7/2/12

RELIABLE
1300 Enterprise Road
Geneva, Alabama 36340
PHONE (334) 684-3621
FAX (334) 684-2832

PLOT SCALE
NONE

ECN:

TITLE
6375DC TEST AND APPROVAL DRAWINGS

DWG. NO.
60-022283-00B

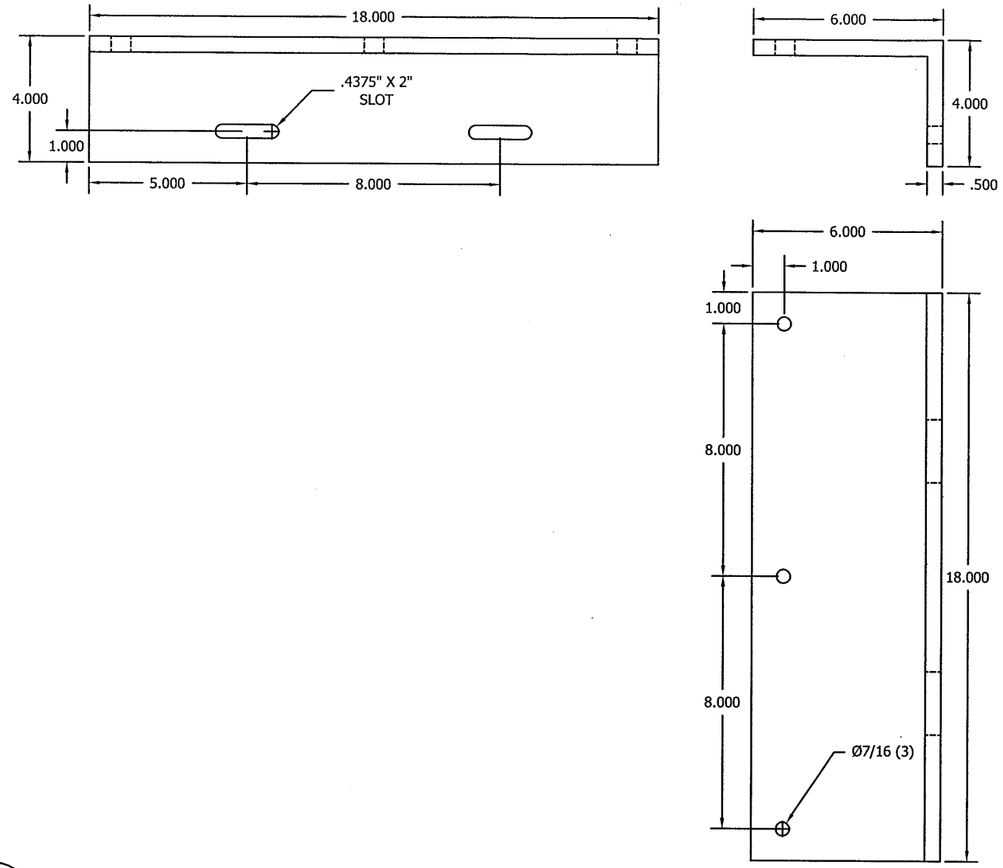

6B

ATTACHMENT ANGLE (CMU)

6375DC

N.T.S.

MAT'L: A36 HDG STL

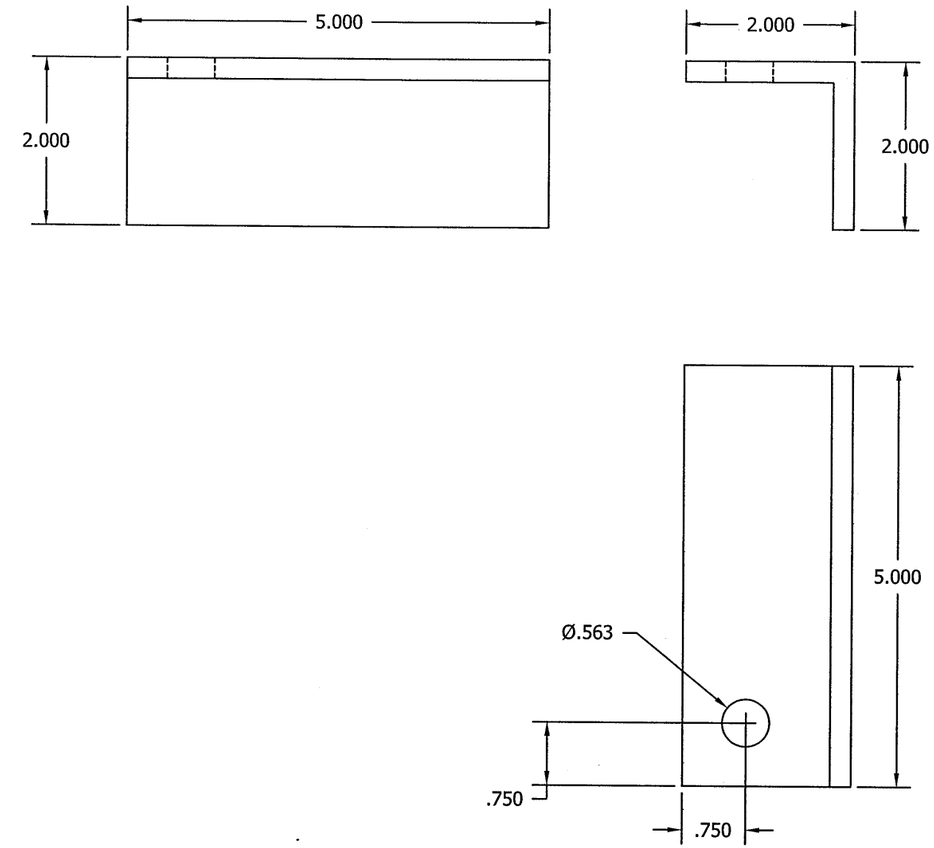

ITEM 9 - SUPPORT ATTACHMENT ANGLE(SLEEVE)

6375DC

N.T.S.

6063-T6 AL EXTRUDED ALUM

ENGINEER OF RECORD	DAN RAU
ENGINEERING DISCIPLINE	CIVIL ENGINEERING
REGISTRATION NUMBER	FL# 63636

DANIEL J. RAU
LICENSE
NO. 63636
STATE OF FLORIDA
PROFESSIONAL ENGINEER

7/5/2012

FOR OFFICE USE ONLY

FOR OFFICE USE ONLY

PRODUCT REVISED
as complying with the Florida Building Code
Acceptance No 12-0607.01
Expiration Date 07/07/2016
By
Miami Dade Product Control

TOLERANCES:
DECIMAL DIMENSIONS:
3 PLACE .XXX +.010
2 PLACE .XX +.020
FRACTION DIMENSIONS: + 1/16
ANGLE DIMENSIONS + 2°
USE WIQ-007 & 008
UNLESS SPECIFIED OTHERWISE

DWN. BY: DJR	CHK. BY: DRP	APPV'D. BY: DRP	APPV'D. BY:
DATE: 02/17/12	DATE: 3/23/12	DATE: 3/23/12	DATE:

SHEET 18 OF 20

CHANGE LETTER	REVISION DESCRIPTION	DWN. BY:	CHK'D. BY:	APPV'D. BY:	APPV'D. BY:	DATE
A	REVISED PER DADE CO. MARKUPS	DRP	DJR	DJR		7/2/12

RELIABLE

1300 Enterprise Road
Geneva, Alabama 36340
PHONE (334) 684-3621
FAX (334) 684-2832

PLOT SCALE: NONE

ECN:

TITLE: 6375DC TEST AND APPROVAL DRAWINGS

DWG. NO. 60-022283-00B

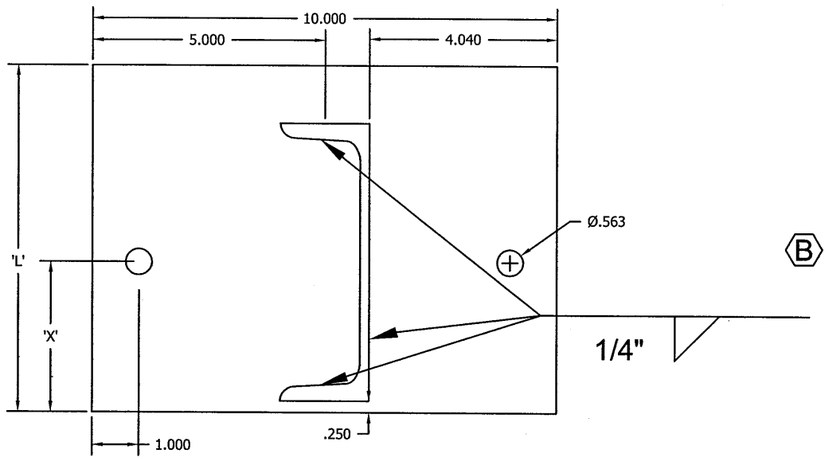

5A

C6X8.2 END PLATE

6375DC

N.T.S.
MAT'L: 1/4" THK A36 HDG STL
LOUVER HEIGHTS OVER 99" TO 111"

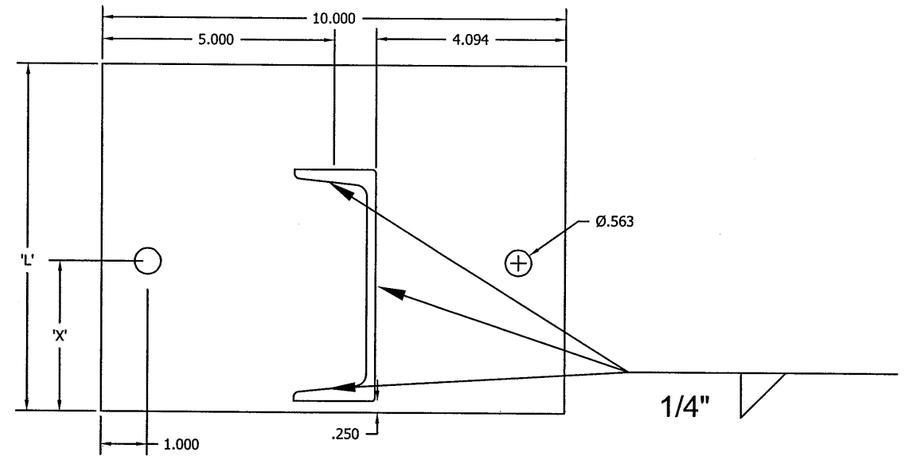

5B

C5X6.7 END PLATE

6375DC

N.T.S.
MAT'L: 1/4" THK A36 HDG STL
LOUVER HEIGHTS OVER 86" TO 99"

ENGINEER OF RECORD
DAN RAU

ENGINEERING DISCIPLINE
CIVIL ENGINEERING

REGISTRATION NUMBER
FL# 63636

DANIEL J. RAU
LICENSE
NO. 63636
STATE OF
FLORIDA
PROFESSIONAL ENGINEER

7/5/2012

FOR OFFICE USE ONLY

FOR OFFICE USE ONLY

PRODUCT REVISED
as complying with the Florida
Building Code
Acceptance No 12-0607.01
Expiration Date 07/09/2016
By
Miami Dade Product Control

TOLERANCES
DECIMAL DIMENSIONS:
3 PLACE .XXX ±.010
2 PLACE .XX ±.020
FRACTION DIMENSIONS: ± 1/16
ANGLE DIMENSIONS ± 2°
USE WIC-007 & 008
UNLESS SPECIFIED OTHERWISE

DWN. BY: DJR	CHK. BY: DRP	APPV'D. BY: DRP	APPV'D. BY:
DATE: 02/17/12	DATE: 3/23/12	DATE: 3/23/12	DATE:

SHEET 19 OF 20

CHANGE LETTER	REVISION DESCRIPTION	DWN. BY:	CHK'D. BY:	APPV'D. BY:	APPV'D. BY:	DATE
A	REVISED PER DADE CO. MARKUPS	DRP	DJR	DJR		7/2/12

RELIABLE
1300 Enterprise Road
Geneva, Alabama 36340
PHONE (334) 684-3621
FAX (334) 684-2832

PLOT SCALE
NONE

ECN:

TITLE
6375DC TEST AND
APPROVAL DRAWINGS

DWG. NO.
60-022283-00B

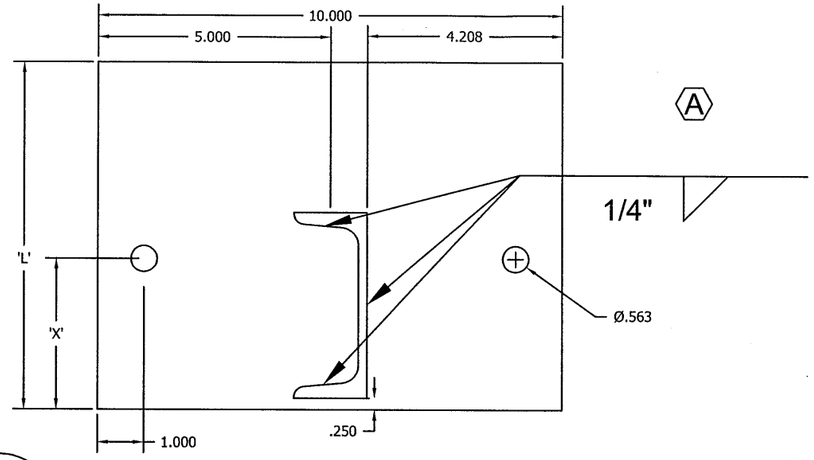

5C
-

C4X5.4 END PLATE 6375DC

N.T.S.
MAT'L: 1/4" THK A36 HDG STL
LOUVER HEIGHTS OVER 74" TO 86"

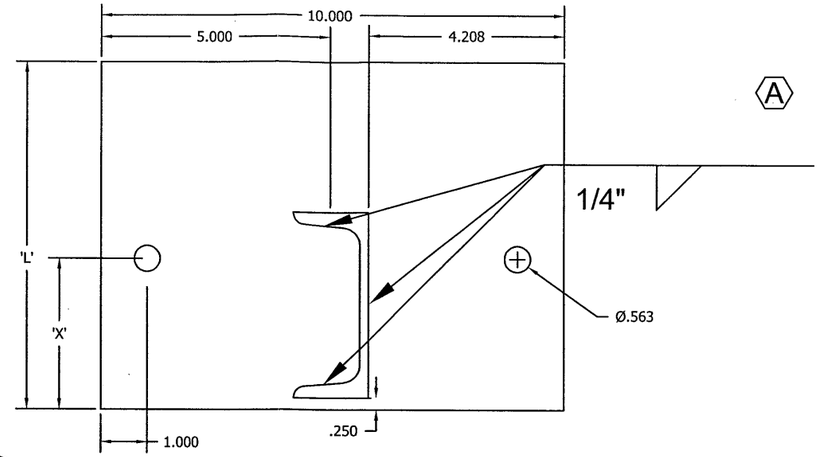

5D
-

C3X4.1 END PLATE 6375DC

N.T.S.
MAT'L: 1/4" THK A36 HDG STL
LOUVER HEIGHTS OVER 27" TO 74"

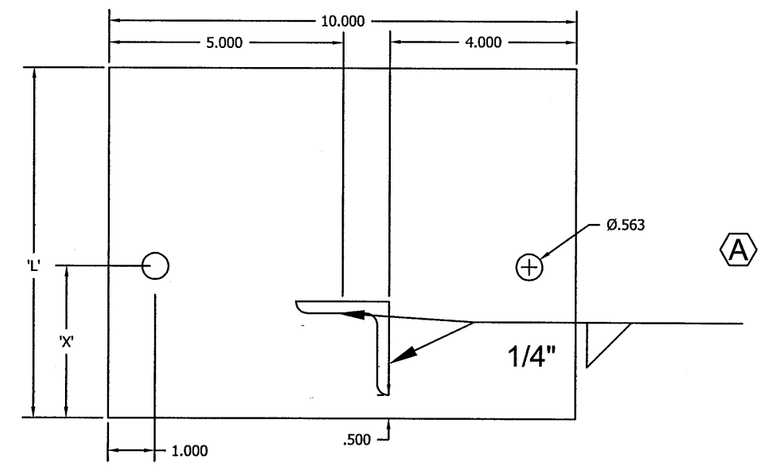

5E
-

2x2x1/4 ANGLE END PLATE 6375DC

N.T.S.
MAT'L: 1/4" THK A36 HDG STL
LOUVER HEIGHTS TO 27"

ENGINEER OF RECORD	DAN RAU
ENGINEERING DISCIPLINE	CIVIL ENGINEERING
REGISTRATION NUMBER	FL# 63636

DANIEL J. RAU
LICENSE
NO. 63636
STATE OF
FLORIDA
PROFESSIONAL ENGINEER
7/5/2012

FOR OFFICE USE ONLY

FOR OFFICE USE ONLY

PRODUCT REVISED
as complying with the Florida Building Code
Acceptance No 12-0607.01
Expiration Date 07/09/2016
By
Miami Dade Product Control

TOLERANCES
DECIMAL DIMENSIONS:
3 PLACE .XXX ± .010
2 PLACE .XX ± .020
FRACTION DIMENSIONS: ± 1/16
ANGLE DIMENSIONS ± 2°
USE WIQ-007 & 008
UNLESS SPECIFIED OTHERWISE

DWN. BY: DJR	CHK. BY: DRP	APPV'D. BY: DRP	APPV'D. BY:
DATE: 02/17/12	DATE: 3/23/12	DATE: 3/23/12	DATE:

SHEET 20 OF 20

CHANGE LETTER	REVISION DESCRIPTION	DWN. BY:	CHK'D. BY:	APPV'D. BY:	APPV'D. BY:	DATE
A	REVISED PER DADE CO. MARKUPS	DRP	DJR	DJR		7/2/12

RELIABLE
1300 Enterprise Road
Geneva, Alabama 36340
PHONE (334) 684-3621
FAX (334) 684-2832

PLOT SCALE
NONE

ECN:

TITLE
6375DC TEST AND APPROVAL DRAWINGS

DWG. NO.
60-022283-00B