MIAMI-DADE COUNTY
DEPARTMENT OF REGULATORY AND ECONOMIC RESOURCES (RER)
BOARD AND CODE ADMINISTRATION DIVISION

MIAMI-DADE COUNTY
PRODUCT CONTROL SECTION
11805 SW 26 Street, Room 208
T (786) 315-2590 F (786) 315-2599
www.miamidade.gov/economy

NOTICE OF ACCEPTANCE (NOA)

N.R. Architectural Products, Inc.
4348 Westroads Drive
West Palm Beach, FL 33407

SCOPE:

This NOA is being issued under the applicable rules and regulations governing the use of construction materials. The documentation submitted has been reviewed and accepted by Miami-Dade County RER - Product Control Section to be used in Miami Dade County and other areas where allowed by the Authority Having Jurisdiction (AHJ).

This NOA shall not be valid after the expiration date stated below. The Miami-Dade County Product Control Section (In Miami Dade County) and/or the AHJ (in areas other than Miami Dade County) reserve the right to have this product or material tested for quality assurance purposes. If this product or material fails to perform in the accepted manner, the manufacturer will incur the expense of such testing and the AHJ may immediately revoke, modify, or suspend the use of such product or material within their jurisdiction. RER reserves the right to revoke this acceptance, if it is determined by Miami-Dade County Product Control Section that this product or material fails to meet the requirements of the applicable building code.

This product is approved as described herein, and has been designed to comply with the Florida Building Code, including the High Velocity Hurricane Zone.

DESCRIPTION: Series "8000 High Performance Unitized" Aluminum Curtain Wall System – L.M.I.

APPROVAL DOCUMENT: Drawing No. **AD10-19**, titled "Series 8000 High Performance Unitized Curtain Wall System (LMI)," sheets 1, 2, 3, 4, 5, 5A, 6, 6A, 7, 8 thru 18, 18A, 19, thru 43 of 46, dated 02/26/12, with revision #2 dated 06/06/12, prepared by M.C.Y. Engineering, Inc., signed and sealed by Yiping Wang, P.E., bearing the Miami-Dade County Product Control Revision stamp with the Notice of Acceptance number and expiration date by the Miami-Dade County Product Control Section.

MISSILE IMPACT RATING: Large and Small Missile Impact Resistant

LABELING: Each unit shall bear a permanent label with the manufacturer's name or logo, city, state, model/series, and following statement: "Miami-Dade County Product Control Approved", unless otherwise noted herein.

RENEWAL of this NOA shall be considered after a renewal application has been filed and there has been no change in the applicable building code negatively affecting the performance of this product.

TERMINATION of this NOA will occur after the expiration date or if there has been a revision or change in the materials, use, and/or manufacture of the product or process. Misuse of this NOA as an endorsement of any product, for sales, advertising or any other purposes shall automatically terminate this NOA. Failure to comply with any section of this NOA shall be cause for termination and removal of NOA.

ADVERTISEMENT: The NOA number preceded by the words Miami-Dade County, Florida, and followed by the expiration date may be displayed in advertising literature. If any portion of the NOA is displayed, then it shall be done in its entirety.

INSPECTION: A copy of this entire NOA shall be provided to the user by the manufacturer or its distributors and shall be available for inspection at the job site at the request of the Building Official.

This NOA **revises NOA# 12-0330.01** and consists of this page 1 and evidence pages E-1 and E-2, as well as approval document mentioned above.

The submitted documentation was reviewed by **Manuel Perez, P.E.**

MIAMI-DADE COUNTY APPROVED

4/23/13

N.R. Architectural Products, Inc.

NOTICE OF ACCEPTANCE: EVIDENCE SUBMITTED

A. DRAWINGS

1. Manufacturer's die drawings and sections.
2. Drawing No. **AD10–19**, titled "Series 8000 High Performance Unitized Curtain Wall System (LMI)," sheets 1, 2, 3, 4, 5, 5A, 6, 6A, 7, 8 thru 18, 18A, 19 thru 43 of 46, dated 02/26/12, with revision #2 dated 6/06/12, prepared by M.C.Y. Engineering Inc., signed and sealed by Yiping Wang, P.E.

B. TESTS

1. Test reports on: 1) Air Infiltration Test, per FBC, TAS 202–94
   2) Uniform Static Air Pressure Test, Loading per FBC TAS 202–94
   3) Water Resistance Test, per FBC, TAS 202–94
   4) Large Missile Impact Test per FBC, TAS 201–94
   5) Cyclic Wind Pressure Loading per FBC, TAS 203–94

   along with marked–up drawings and installation diagram of series 8000 High Performance unitized aluminum single span curtain wall system, prepared by Architectural Testing, Inc., Test Reports No. **ATI–B5204.01–450–18**, specimens E1 and E2, dated 04/09/12, signed and sealed by Vinu J. Abraham, P.E.
2. Test reports on: 1) Air Infiltration Test, per FBC, TAS 202–94
   2) Uniform Static Air Pressure Test, Loading per FBC TAS 202–94
   3) Water Resistance Test, per FBC, TAS 202–94
   4) Large Missile Impact Test per FBC, TAS 201–94
   5) Cyclic Wind Pressure Loading per FBC, TAS 203–94

   along with marked–up drawings and installation diagram of series 8000 High Performance unitized aluminum single span curtain wall system, prepared by Hurricane Test Laboratory, LLC, Test Reports No.'s **HTL–0242–0306–10** & **HTL–0242–0611–10**, dated 05/21/10 and 08/03/10, both signed and sealed by Vinu J. Abraham, P.E.

   (Submitted under previous NOA No. 10–1013.09)

C. CALCULATIONS

1. Anchor verification calculations and structural analysis, complying with FBC 2010, dated 05/18/12, prepared by M.C.Y. Engineering, Inc., signed and sealed by Yiping Wang, P.E.
2. Glazing complies with ASTM E1300-04

Manuel Perez, P.E.
Product Control Examiner
NOA No. 12-0608.04
Expiration Date: April 07, 2016
Approval Date: May 02, 2013

NOTICE OF ACCEPTANCE: EVIDENCE SUBMITTED

D. QUALITY ASSURANCE

1. Miami-Dade Department of Regulatory and Economic Resources (RER)

E. MATERIAL CERTIFICATIONS

1. Notice of Acceptance No. **11–0624.02** issued to **E.I. DuPont DeNemours & Co.**, Inc. for their "**DuPont SentryGlas® Interlayer**" dated 08/25/11, expiring on 01/14/17.

F. STATEMENTS

1. Statement letter of conformance, complying with FBC-2010, dated May 19, 2012, prepared by M.C.Y. Engineering, Inc., signed and sealed by Yiping Wang, P.E.
2. Statement letter of no financial interest, dated May 19, 2012, prepared by M.C.Y. Engineering, Inc., signed and sealed by Yiping Wang, P.E.
3. Laboratory compliance letter for Test Report No. **HTL–B5204.01–450–18**, dated 04/09/12, signed and sealed by Vinu J. Abraham, P.E.
4. Laboratory compliance letter for Test Reports No.'s **HTL–0242–0306–10** and **HTL–0242–0611–10**, dated 05/21/10 and 08/03/10, both signed and sealed by Vinu J. Abraham, P.E.
   (Submitted under previous NOA No.10–1013.09)

G. OTHERS

1. Notice of Acceptance No. **12-0330.01**, issued to NR Architectural Products, for their Series "8000 High Performance Unitized" Aluminum Curtain Wall System – L.M.I., approved on 06/14/12 and expiring on 04/07/16.

Manuel Perez, P.E.
Product Control Examiner
NOA No. 12-0608.04
Expiration Date: April 07, 2016
Approval Date: May 02, 2013

SERIES 8000 HIGH PERFORMANCE UNITIZED CURTAIN WALL (LMI)

INDEX

01	SM01	DESIGN SPECIFICATION
02	C01	SCHEDULE OF EXTRUSIONS
03	C02	SCHEDULE OF EXTRUSIONS
04	C03	SCHEDULE OF EXTRUSIONS
05	E01	MULTIPLE SPAN ELEVATION AND SECTIONS
*5A	E01A	MULTIPLE SPAN ELEVATION AND SECTIONS 2
06	E02	SINGLE SPAN ELEVATION AND SECTIONS
*6A	E02A	SINGLE SPAN ELEVATION AND SECTIONS 2
07	PM01	PLAN VIEW
08	PM02	PLAN VIEW
09	D01	INTERMEDIATE VERTICAL MULLION DETAIL
10	D02	90° CORNER VERTICAL MULLION DETAIL
11	D03	JAMB VERTICAL MULLION DETAIL
12	D04	INTERMEDIATE MULLION AT SPANDREL AREA
13	D05	90° CORNER MULLION AT SPANDREL AREA
14	D06	LEFT JAMB MULLION AT SPANDREL AREA
15	D07	RIGHT JAMB MULLON AT SPANDREL AREA
16	D08	HEAD DETAIL
17	D09	TYP. INTERMEDIATE HORIZONTAL DETAIL
18	D10	STACK JOINT DETAIL
*18A	D10A	STACK JOINT DETAIL 2
19	D11	STARTER SILL DETAIL
20	D12A	TYP. ALUM. PANEL AT SPANDREL AREA
21	D12B	INTERMEDIATE HORIZONTAL W/ ANCHOR DETAIL
22	D13	90° CORNER AT SPANDREL AREA DETAIL
23	D14A	RIGHT JAMB AT SILL AREA DETAIL
24	D14B	LEFT JAMB AT SILL DETAIL
25	D15A	INTERMEDIATE MULLION AT SILL DETAIL
26	D15B	INTERMEDIATE MULLION AT SILL DETAIL
27	D15C	LEFT JAMB AT SILL DETAIL
28	D16	90° CORNER AT SILL DETAIL
39	D17	INTERMEDIATE MULLION AT STACK JOINT DETAIL
30	D18	HEAD DETAIL
31	D19	RIGHT JAMB AT STACK JOINT DETAIL
32	D20	90° CORNER ISOMETRIC
33	D21	FEMALE 90° CORNER MULLION ISOMETRIC
34	D22	90° CORNER AT STACK JOINT DETAIL
35	D23	TYP. INTERM. MULLION AT SPANDREL AREA
36	D24	HEAD ANCHOR AT INTERM. MULLION DETAIL
37	D25	LEFT JAMB AT STACK JOINT DETAIL
38	D26A	INTERM. MULLION DETAIL BELOW STACK JOINT
39	D26B	LEFT JAMB DETAIL BELOW STACK JOINT
40	D27	CORNER STEEL ANCHOR ISOMETRIC
*41	D28	HEAD DETAIL
*42	D29	TYP. INTERMEDIATE HORIZONTAL DETAIL 2
*43	D30	STARTER SILL DETAIL

* NEW SHEETS

MATERIALS

A. ALUMINUM:

1- ALL ALUMINUM EXTRUSION SHALL BE 6063-T5, 6063--T6 AND 6061-T6 (OR EQUIVALENT) AS SHOWN IN BILL OF MATERIAL

2- ALUMINUM PANEL $\frac{1}{8}$" THK MIN 3003-H14

B. STEEL:

1- ALL STEEL FOR CURAIN WALL SHALL BE Q235 Fy=34ksi

2- ALL STEEL WELDS TO BE ELECTRODE E70

C. SEALANT:

1- APPLY DOW CORNING 791 TO SHOP APPLIED METAL TO METAL JOINERY (FRAME ASSEMBLY). APPLY DOW CORNING 790 TO EXTERIOR PERIMETERS SEALANT AND FASTENER SEALANT.

2-- THE GLAZING SEALANT SHALL BE DOW CORNING 983

D. GLASS:

1- $1\frac{1}{4}$" NOMINAL INSULATED LAMINATED GLASS COMPOSED OF :

- $\frac{1}{4}$" THK TEMPERED GLASS (EXTERIOR)
- $\frac{1}{2}$" THK AIR SPACE
- $\frac{1}{4}$" THK H.S. GLASS
- 0.120 PVB INTERLAYER
- $\frac{1}{4}$" THK TEMPERED GLASS

B 2

2- $\frac{9}{16}$" NOMINAL LAMINATED GLASS COMPOSED OF :

- $\frac{1}{4}$" THK C.H.S GLASS
- 0.090" DUPONT SENTRYGLASS IONOPLAST INTERLAYER
- $\frac{1}{4}$" THK C.H.S GLASS

A

3- GLASS CAPACITY FOR A GIVEN WIDTH AND HEIGHT USE CHART OF SHEET E02

4- SETTING BLOCK AT $\frac{1}{8}$ POINT

E. FASTENERS: 2

1-ALL BOLTS AND NUTS ATTACHED TO ALUMINUM AND ANCHORED TO STEEL SUPPORTING MEMBER SHALL BE:
304 SERIES COLD-ROLLED STAINLESS STEEL
Fy=65ksi FOR FASTENER DIAMETER UP TO $\frac{9}{16}$"
Fy=45ksi FOR FASTENER DIAMETER EQUAL OR GREATER THAN $\frac{3}{4}$".

2-ANCHORS INTO CONCRETE SHALL BE:
5/16" DIA. TAPCON. (Fy=92ksi Fu=120ksi)

3-SCREWS INTO STEEL MEMBER SHALL BE:
ST6.3 STAINLESS STEEL 410 (Fy=92ksi Fu=120ksi)

GENERAL NOTES

CURTAIN WALL SYSTEM IS RATED FOR LARGE MISSILE IMPACT AND SMALL MISSILE IMPACT. SHUTTERS NOT REQUIRED.

CODE REQUIREMENTS FOR SAFEGUARDS MUST BE OBSERVED

THIS PRODUCT HAS BEEN DESIGNED AND TESTED TO COMPLY WITH THE REQUIREMENTS OF THE FLORIDA BUILDING CODE INCLUDING HIGH VELOCITY HURRICANE ZONE (HVHZ)

ANCHORS SHALL BE AS LISTED, SPACED AS SHOWN ON DETAILS, ANCHORS EMBEDMENT TO BASE MATERIAL SHALL BE BEYOND WALL DRESSING OR STUCCO

ANCHORING OR LOADING CONDITIONS NOT SHOWN IN THESE DETAILS ARE NOT PART OF THIS APPROVAL

MATERIALS INCLUDING BUT NOT LIMITED TO STEEL/METAL SCREWS, THAT COME INTO CONTACT WITH OTHER DISSIMILAR MATERIALS SHALL MEET THE REQUIREMENTS OF CURRENT FLORIDA BUILDING CODE SECTION 2003.8

INSTRUCTIONS:

STEP #1:
DETERMINE DESIGN WIND LOAD REQUIREMENTS BASED ON WIND VELOCITY, BUILDING HEIGHT, AND WIND ZONE USING APPLICABLE ASCE 7 STANDARDS OR WIND TUNNEL REPORTS

STEP #2:
SEE CHART ON SHEET 6 OR 6A OF 46 FOR GLASS CAPACITY OF DESIGNED GLASS SIZE

STEP #3:
CHECK MULLION CAPACITY FOR A GIVEN SPACING AND HEIGHT USING CHART ON SHEET 5 AND 5A OF 46 FOR MULTIPLE SPAN AND USING CHART ON SHEET 6 AND 6 A OF 46 FOR SINGLE SPAN

STEP #4:
THE LOWEST VALUES RESULTING FROM STEP 2 AND 3 SHALL APPLY TO THE ENTIRE SYSTEM

FEB 1 1 2013

PRODUCT REVISED
as complying with the Florida Building Code
Acceptance No 12-0608.04
Expiration Date Feb 1, 2016
By Manuel Cruz
Miami Dade Product Control

MIAMI DADE COUNTY

YIPING WANG, P.E.
FLORIDA REGISTRATION
PE #55983
C.A.N. 28677

REVISIONS

NO.	DATE	DESCRIPTION
1	2/28/12	UPDATE TO FBC2010
2	6/06/12	INCLUDING STRUC. GLAZING OPTION

MCY ENGINEERING, INC.
GLAZING CONSULTANTS
8501 SW 124 AVE. STE. 205A
MIAMI, FL. 33183
P: 305.271.0117
F: 786.572.5063
www.MCYEngineering.com
MCY.Engineering@AT.net

SERIES 8000 HIGH PERFORMANCE UNITIZED CURTAIN WALL SYSTEM (L.M.I.)

NR ARCHITECTURAL PRODUCTS
4348 WESTROADS DRIVE
WEST PALM BEACH, FL 33407
P: (561) 844 - 1121 F: (561) 844 - 6131

DATE	02-28-12
SCALE	AS NOTED
DRAWN	S.I.
PROJECT	0922

DRAWING NO.
AD10-19
SM01

NLDM-001 MALE MULLION

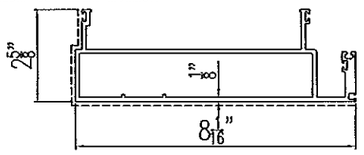

ALUMINUM		MATERIAL	6063-T6
PROFILE NO.	NLDM-001	TREATMENT	PVDF PAINTING (3 LAYERS)
PAINTING COLOR			

NLDM-002 FEMALE MULLION

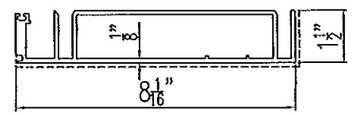

ALUMINUM		MATERIAL	6063-T6
PROFILE NO.	NLDM-002	TREATMENT	PVDF PAINTING (3 LAYERS)
PAINTING COLOR			

NLDM-003 MALE JAMB

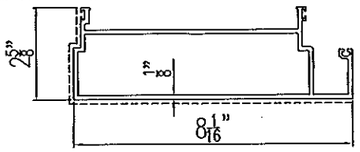

ALUMINUM		MATERIAL	6063-T6
PROFILE NO.	NLDM-003	TREATMENT	PVDF PAINTING (3 LAYERS)
PAINTING COLOR			

NLDM-004 MALE STARTER/STACK JOINT HORIZ.

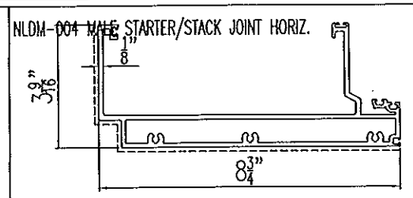

ALUMINUM		MATERIAL	6063-T6
PROFILE NO.	NLDM-004	TREATMENT	PVDF PAINTING (3 LAYERS)
PAINTING COLOR			

NLDM-005 INTERM HORIZONTAL

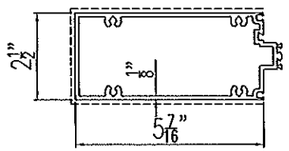

ALUMINUM		MATERIAL	6063-T5
PROFILE NO.	NLDM-005	TREATMENT	PVDF PAINTING (3 LAYERS)
PAINTING COLOR			

NLDM-006 INTERM. HORIZONTAL

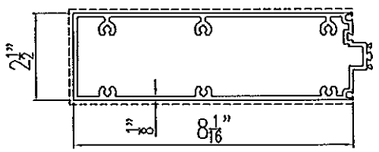

ALUMINUM		MATERIAL	6063-T5
PROFILE NO.	NLDM-006	TREATMENT	PVDF PAINTING (3 LAYERS)
PAINTING COLOR			

NLDM-007 FEMALE STACK JOINT

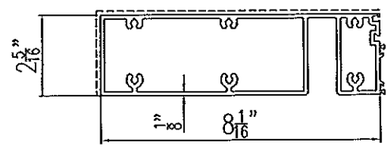

ALUMINUM		MATERIAL	6063-T5
PROFILE NO.	NLDM-007	TREATMENT	PVDF PAINTING (3 LAYERS)
PAINTING COLOR			

NLDM-008 HORIZONTAL SPLICE

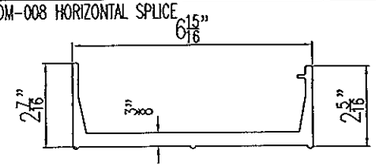

ALUMINUM		MATERIAL	6061-T6
PROFILE NO.	NLDM-008	TREATMENT	ANODIZED
PAINTING COLOR			

NLDM-009 HORIZONTAL GLAZING ADAPTOR

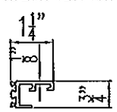

ALUMINUM		MATERIAL	6063-T5
PROFILE NO.	NLDM-009	TREATMENT	ANODIZED
PAINTING COLOR			

NLDM-010 PANEL ADAPTOR

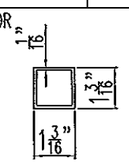

ALUMINUM		MATERIAL	6063-T5
PROFILE NO.	NLDM-010	TREATMENT	ANODIZED
PAINTING COLOR			

NLDM-011 INTERMEDIATE CAP

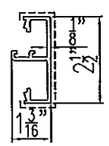

ALUMINUM		MATERIAL	6063-T5
PROFILE NO.	NLDM-011	TREATMENT	PVDF PAINTING (3 LAYERS)
PAINTING COLOR			UC109848

NLDM-032 CORNER MULLION ANCHOR BRACKET

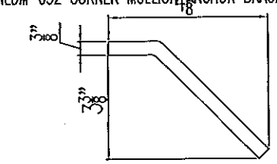

ALUMINUM		MATERIAL	6061-T6
PROFILE NO.	NLDM-032	TREATMENT	ANODIZED
PAINTING COLOR			

NLDM-013 STACK JOINT COVER CAP

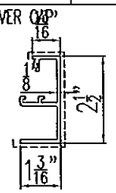

ALUMINUM		MATERIAL	6063-T5
PROFILE NO.	NLDM-013	TREATMENT	PVDF PAINTING (3 LAYERS)
PAINTING COLOR			

NLDM-014 DRYWALL ADAPTOR (OPTIONAL)

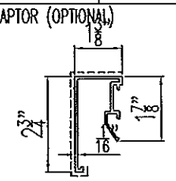

ALUMINUM		MATERIAL	6063-T5
PROFILE NO.	NLDM-014	TREATMENT	PVDF PAINTING (3 LAYERS)
PAINTING COLOR			

NLDM-015 STARTER SILL ADAPTOR

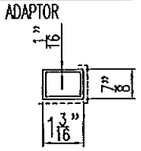

ALUMINUM		MATERIAL	6063-T5
PROFILE NO.	NLDM-015	TREATMENT	PVDF PAINTING (3 LAYERS)
PAINTING COLOR			

NLDM-016 HEAD GLAZING ADAPTOR

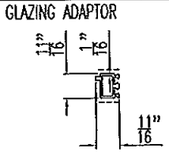

ALUMINUM		MATERIAL	6063-T5
PROFILE NO.	NLDM-016	TREATMENT	PVDF PAINTING (3 LAYERS)
PAINTING COLOR			

LDM-033: HORIZONTAL

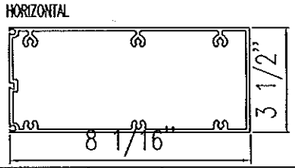

ALUMINUM		MATERIAL	6063-T5
PROFILE NO.	LDM-033	TREATMENT	PVDF PAINTING (3 LAYERS)
PAINTING COLOR			

LDM-037: GLASS CHAIR

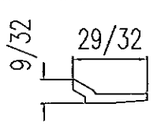

ALUMINUM		MATERIAL	6061-T6
PROFILE NO.	LDM-037	TREATMENT	ANODIZED
PAINTING COLOR			

LDM-044: S. STARTER TRIM

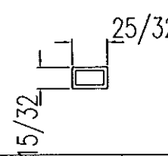

ALUMINUM		MATERIAL	6063-T5
PROFILE NO.	LDM-044	TREATMENT	PVDF PAINTING (3 LAYERS)
PAINTING COLOR			

LJG-08: SILL GLASS CHAIR

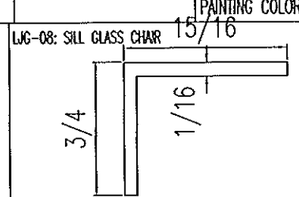

ALUMINUM		MATERIAL	6063-T5
PROFILE NO.	LJG-08	TREATMENT	PVDF PAINTING (3 LAYERS)
PAINTING COLOR			

FEB 11 2013

PRODUCT REVISED
as complying with the Florida
Building Code
Acceptance No 12-0608.04
Expiration Date April 1, 2016
By Manuel Cruz
Miami Dade Product Control

MIAMI DADE COUNTY

YIPING WANG, P.E.
FLORIDA REGISTRATION
PE #55983
C.A.N. 28677

SERIES 8000 HIGH PERFORMANCE UNITIZED CURTAIN WALL

REVISIONS		
NO.	DATE	DESCRIPTION
1	2/26/12	UPDATE TO FBC2010
2	6/06/12	INCLUDING STRUC. GLAZING OPTION

MCY ENGINEERING, INC.
GLAZING CONSULTANTS
8501 SW 124 AVE. STE. 303A
MIAMI, FL 33183
P: 305.271.0117
F: 786.573.3063
www.MCYEngineering.com
MCY.Engineering@AOL.net

SERIES 8000 HIGH PERFORMANCE UNITIZED CURTAIN WALL SYSTEM (L.M.I.)

NR ARCHITECTURAL PRODUCTS
4348 WESTROADS DRIVE
WEST PALM BEACH, FL. 33407
P: (561) 844 - 1121 F: (561) 844 - 6131

DATE	02-26-12
SCALE	AS NOTED
DRAWN	S.L.
PROJECT	0922

DRAWING NO.
AD10-19
C01

NLDM-017 DRYWALL ADAPTOR (OPYIONAL)

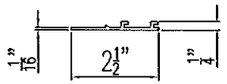

ALUMINUM		MATERIAL	6063-T5
PROFILE NO.	NLDM-017	TREATMENT	ANODIZED
PAINTING COLOR			

NLDM-018 VERTICAL CORNER GLAZING ADAPTOR

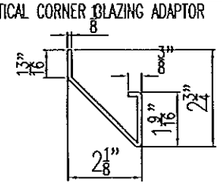

ALU SOLID SHEET		MATERIAL	
PROFILE NO.	NLDM-018	TREATMENT	PVDF PAINTING (3 LAYERS)
PAINTING COLOR			

NLDM-019 CORNER SPLICE

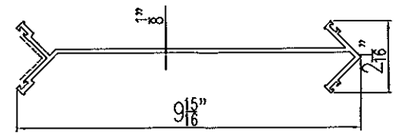

ALUMINUM		MATERIAL	6063-T6
PROFILE NO.	NLDM-019	TREATMENT	PVDF PAINTING (3 LAYERS)
PAINTING COLOR			

NLDM-020 ANTI BUCKLING CLIP

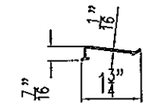

ALUMINUM		MATERIAL	6063-T5
PROFILE NO.	NLDM-020	TREATMENT	ANODIZED
PAINTING COLOR			

NLDM-021 GLASS CHAIR

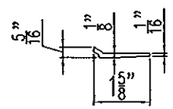

ALUMINUM		MATERIAL	6063-T6
PROFILE NO.	NLDM-021	TREATMENT	ANODIZED
PAINTING COLOR			4"LG

NLDM-022 FEMALE STACK JOINT ADAPTOR

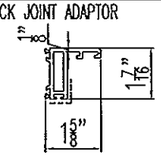

ALUMINUM		MATERIAL	6063-T5
PROFILE NO.	NLDM-022	TREATMENT	PVDF PAINTING (3 LAYERS)
PAINTING COLOR			

NLDM-023 HOOK

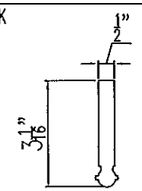

ALUMINUM		MATERIAL	6061-T6
PROFILE NO.	NLDM-023	TREATMENT	ANODIZED
PAINTING COLOR			

NLDM-024 MULLION BRACKET

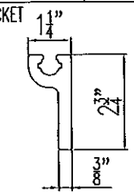

ALUMINUM		MATERIAL	6061-T6
PROFILE NO.	NLDM-024	TREATMENT	ANODIZED
PAINTING COLOR			

SB-01 STEEL BRACKET

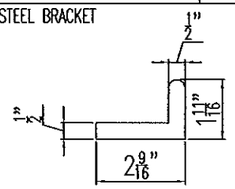

STEEL		MATERIAL	Q235
PROFILE NO.	SB-01	TREATMENT	HOT DIP GALVANIZING
PAINTING COLOR			

NLDM-026 ANTI-WALKING CLIP

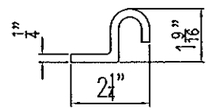

ALUMINUM		MATERIAL	6061-T6
PROFILE NO.	NLDM-026	TREATMENT	ANODIZED
PAINTING COLOR			

NLDM-027 END JAMB ADAPTOR

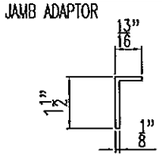

ALUMINUM		MATERIAL	6063-T5
PROFILE NO.	NLDM-027	TREATMENT	ANODIZED
PAINTING COLOR			

NLDM-028 DRYWALL ADAPTOR (OPTIONAL)

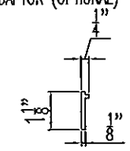

ALUMINUM		MATERIAL	6063-T6
PROFILE NO.	NLDM-028	TREATMENT	ANODIZED
PAINTING COLOR			

NLDM-029 CORNER MALE MULLION

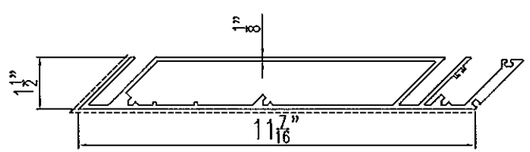

ALUMINUM		MATERIAL	6063-T6
PROFILE NO.	NLDM-029	TREATMENT	PVDF PAINTING (3 LAYERS)
PAINTING COLOR			

NLDM-030 CORNER BRACKET

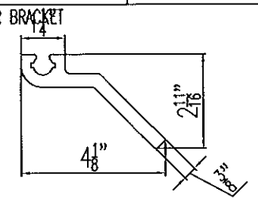

ALUMINUM		MATERIAL	6061-T6
PROFILE NO.	NLDM-030	TREATMENT	ANODIZED
PAINTING COLOR			

NLDM-031 JAMB TRIM

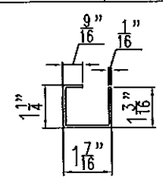

ALU SOLID SHEET		MATERIAL	6061-T6
PROFILE NO.	NLDM-031	TREATMENT	PVDF PAINTING (3 LAYERS)
PAINTING COLOR			

FEB 1 1 2013

PRODUCT REVISED
as complying with the Florida
Building Code
Acceptance No 12-0608.04
Expiration Date April 1, 2016
By Manuel Perez
Miami Dade Product Control

MIAMI DADE COUNTY

YIPING WANG, P.E.
FLORIDA REGISTRATION
PE #55983
C.A.N. 28677

SERIES 8000 HIGH PERFORMANCE UNITIZED CURTAIN WALL

REVISIONS			
NO.	DATE	DESCRIPTION	
1	2/28/12	UPDATE TO FBC2010	
2	8/06/12	INCLUDING STRUC. GLAZING OPTION	

MCY ENGINEERING, INC.
GLAZING CONSULTANTS
8501 SW 124 AVE. STE. 305A
MIAMI, FL. 33183
P: 305.271.0117
F: 786.573.5063
www.MCYEngineering.com
MCY.Engineering@AOL.net

SERIES 8000 HIGH PERFORMANCE UNITIZED CURTAIN WALL SYSTEM (L.M.I.)

NR ARCHITECTURAL PRODUCTS
4348 WESTROADS DRIVE
WEST PALM BEACH, FL. 33407
P: (561) 844 - 1121 F: (561) 844 - 6131

DATE	02-28-12
SCALE	AS NOTED
DRAWN	S.L.
PROJECT	0922

DRAWING NO.
AD10-19
C02

NAME	MATERIAL AND SPEC	SYMBOL
GASKET (BLACK)	EPDM (IRHD: 60±5)	JT-01
GASKET (BLACK)	EPDM (IRHD: 60±5)	JT-02
GASKET (BLACK)	EPDM (IRHD: 60±5)	JT-03
GASKET (BLACK)	EPDM (IRHD: 60±5)	JT-04
GASKET (BLACK)	EPDM (IRHD: 60±5)	JT-05
THERMAL BREAK	PA66 GF25	DRT-01
AIR-LOCKED SPONGE BAR	20X26.5 NBR/PVC	HM-01
AIR-LOCKED SPONGE BAR	21.5X27 NBR/PVC	HM-02
AIR-LOCKED SPONGE BAR	10.5X18.5 NBR/PVC	HM-03
AIR-LOCKED SPONGE BAR	10.5X29	HM-04
SILICONE SHEET	SILICONE (IRHD: 70±5)	GJT-01
SILICONE SHEET	SILICONE (IRHD: 70±5)	GJT-01A
SILICONE SHEET	SILICONE (IRHD: 70±5)	GJT-02
SILICONE SHEET	SILICONE (IRHD: 70±5)	GJT-03
SINGLE SIDED ADHESIVE TAPE	POLYURETHANE	DM-01
SINGLE SIDED ADHESIVE TAPE	POLYURETHANE	DM-02
SINGLE SIDED ADHESIVE TAPE	POLYURETHANE	DM-03
SINGLE SIDED ADHESIVE TAPE	POLYURETHANE	DM-04
SINGLE SIDED ADHESIVE TAPE	POLYURETHANE	DM-05
NYLON BLOCKS	NYLON 1010	NL-01
NYLON BLOCKS	NYLON 1010	NL-02
NYLON BLOCKS	NYLON 1010	NL-03
NYLON BLOCKS	NYLON 1010	NL-04
NYLON BLOCKS	NYLON 1010	NL-05
NYLON BLOCKS	NYLON 1010	NL-06
NYLON BLOCKS	NYLON 1010	NL-07
NYLON BLOCKS	NYLON 1010	NL-08

NAME	MATERIAL AND SPEC	SYMBOL
ASSEMBLY HOLE COVER	PVC	NL-09
ASSEMBLY HOLE COVER	PVC	NL-10
NYLON BLOCKS	NYLON 1010	NL-11
NYLON BLOCKS	NYLON 1010	NL-12
NYLON BLOCKS	NYLON 1010	NL-13
PVC BLOCKS	PVC	NL-14
STAINLESS STEEL BOLT	GB819-85-M8X20(S.S. 304)	ZGD-01
STAINLESS STEEL SELF-TAPPING SCREW	GB845-85-ST4.8X16(S.S.304)	ZGD-02
STAINLESS STEEL COUNTERSUNK SELF-TAPPING SCREW	GB846-85-ST6.3X25(S.S.304)	ZGD-03
STAINLESS STEEL COUNTERSUNK SELF-TAPPING SCREW	GB846-85-ST4.8X16(S.S.304)	ZGD-04
STAINLESS STEEL SELF-TAPPING SCREW	GB845-85-ST4.8X19(S.S.304)	ZGD-05
STAINLESS STEEL SELF-TAPPING SCREW	GB845-85-ST4.8X13(S.S.304)	ZGD-06
SELF-DRILLING SCREW	ST6.3X19-Hp (S.S. 304)	ZGD-07
STAINLESS STEEL BOLT	GB819-85-M10X25 (S.S.304)	ZGD-08
STAINLESS STEEL BOLT	GB819-85-M10X20 (S.S.304)	ZGD-09
OUTER- HEXAGONAL SELF TAPPING DRILLING SCREW	ST6.3X50 (S.S. 410)	ZGD-10
STAINLESS STEEL BOLT	GB819-85-M6X16 (S.S. 304)	ZGD-11
OUTER- HEXAGONAL SELF TAPPING DRILLING SCREW	ST6.3X100 (S.S. 410)	ZGD-12
SEALANT-BACK ROD	POLYETHENE ø5/16" FROTH MATERIALS	PM-01
SEALANT-BACK ROD	POLYETHENE ø1" FROTH MATERIALS	PM-02
STAINLESS STEEL SCREW	GB70-85-M6X40 (S.S. 304)	LS-01
STAINLESS STEEL SPRING WASHER	GB93-87 6 (S.S. 304)	
STAINLESS STEEL BOLT	GB5781-2000-M12X40 (S.S. 304)	LS-02
STAINLESS STEEL FLAT WASHER	GB95-85 12 (S.S. 304)	
STAINLESS STEEL SPRING WASHER	GB93-87 12 (S.S. 304)	
STAINLESS STEEL NUT	GB41-86 M12 (S.S. 304)	
STAINLESS STEEL BOLT	GB77-85-M16X20 (S.S. 304)	LS-03
STAINLESS STEEL BOLT	GB5781-2000-M20X70 (S.S. 304)	LS-04
STAINLESS STEEL FLAT WASHER	GB95-85 20 (S.S. 304)	
STAINLESS STEEL SPRING WASHER	GB93-87 20 (S.S. 304)	
STAINLESS STEEL NUT	GB41-86 M20 (S.S. 304)	

NAME	MATERIAL AND SPEC	SYMBOL
STAINLESS STEEL PIN	GB12618-90-4X12 (S.S. 304)	CD-01
STAINLESS STEEL GLASS CHAIR COUNTERSUNK SCREW	GB46-85-ST4.2X13 (S.S 304)	SB-02
STAINLESS STEEL BOLT	GB70-85-M6X40 (S.S 304)	LS-11
SINGLE SIDED ADHESIVE TAPE	POLYURETHANE	LS-01
GLASS CHAIR SETTING BLOCK	NYLON 1010	SB-01
STAINLESS STEEL BOLT	GB5781-2000-M12X50 (S.S. 304)	LS-08
STAINLESS STEEL FLAT WASHER	GB95-85 12 (S.S. 304)	
STAINLESS STEEL SPRING WASHER	GB93-87 12 (S.S. 304)	
STAINLESS STEEL NUT	GB41-86 M12 (S.S. 304)	
STAINLESS STEEL BOLT	M12X75 (S.S. 304)	LS-09
STAINLESS STEEL BOLT	M12X100 (S.S. 304)	
STAINLESS STEEL NUT	GB41-86 M12 (S.S. 304)	
STAINLESS STEEL FLAT WASHER	GB95-85 12 (S.S. 304)	
STAINLESS STEEL SPRING WASHER	GB93-87 12 (S.S. 304)	
STAINLESS STEEL NUT	GB41-86 M12 (S.S. 304)	
STAINLESS STEEL BOLT	GB5781-2000-M12X90 (S.S. 304)	LS-10
STAINLESS STEEL FLAT WASHER	GB95-85 12 (S.S. 304)	
STAINLESS STEEL SPRING WASHER	GB93-87 12 (S.S. 304)	
STAINLESS STEEL NUT	GB41-86 M12 (S.S. 304)	
ROCKWOOL	POLYSTYRENE (75MM FIREPROOFING)	JS-01

STEEL REINFORCEMENT

ST-1: 6-1/2" X 11/16" STEEL BAR
ST-2: 5-7/16" X 11/16" STEEL BAR
ST-3: 5-1/2" X 11/16" STEEL BAR

2

FEB 1 1 2013

PRODUCT REVISED
as complying with the Florida Building Code
Acceptance No 12-0608.04
Expiration Date April 9, 2016
By Manuel Diaz
Miami Dade Product Control

MIAMI DADE COUNTY

YIPING WANG, P.E.
FLORIDA REGISTRATION
PE #55983
C.A.N. 28677

REVISIONS		
NO.	DATE	DESCRIPTION
1	2/26/12	UPDATE TO FBC2010
2	6/06/12	INCLUDING STRUC. GLAZING OPTION

MCY ENGINEERING, INC.
GLAZING CONSULTANTS
8501 SW 124 AVE. STE. 205A
MIAMI, FL. 33183
P: 305.271.0117
F: 786.573.5063
www.MCYEngineering.com
MCY.Engineering@ATT.net

SERIES 8000 HIGH PERFORMANCE UNITIZED CURTAIN WALL SYSTEM (L.M.I.)

NR ARCHITECTURAL PRODUCTS
4348 WESTROADS DRIVE
WEST PALM BEACH, FL. 33407
P: (561) 844 - 1121 F: (561) 844 - 6131

DATE	02-26-12
SCALE	AS NOTED
DRAWN	S.I.
PROJECT	0922

DRAWING NO.
AD10-19
C03

MAXIMUM WIND AND DEAD LOAD AT ANCHORS					
MULLION		JAMB		CORNER MULLION (EACH SIDE)	
WLm	DLm	WLj	DLj	WLcm	DLcm
LB	LB	LB	LB	LB	LB
10,300	1,100	5,150	550	5,150	550

IT SHALL BE THE RESPONSIBILITY OF THE CONTRACTOR TO VERIFY WITH ENGINEER OF RECORD THAT THE STRUCTURE WHERE ANCHOR IS ATTACHED IS PROPERLY DESIGNED TO TAKE THE LOADS IMPOSED BY THE CURTAIN WALL SYSTEM. REFER TO THE ANCHOR LOADS SHOWN IN ABOVE CHART

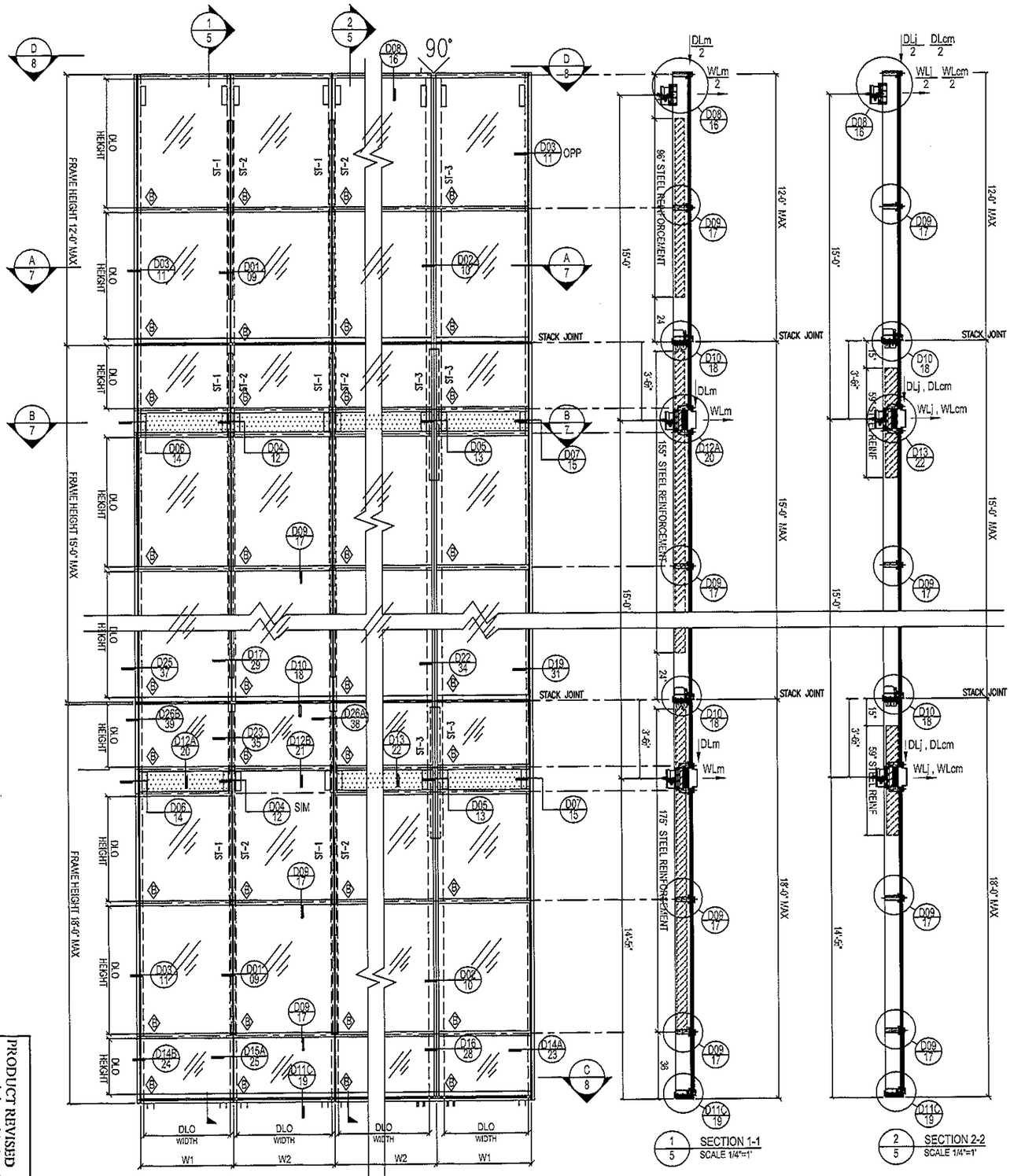

MULTIPLE SPAN ELEVATION OF CURTAIN WALL

WITH GLASS TYPE B

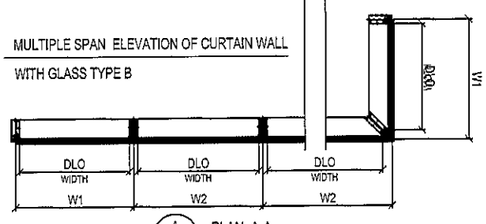

PLAN A-A
SCALE 1/4"=1'

DESIGN LOAD (PSF)		
W1	POSITIVE	NEGATIVE
in	PSF	PSF
43-1/2"	+92	-143

W2	POSITIVE	NEGATIVE
in	PSF	PSF
43-1/2"	+92	-143

FOR GLASS CAPACITY SEE CHART ON SHEET 6 OF 46

GLASS TYPE (LMI)

PRODUCT REVISED as complying with the Florida Building Code Acceptance No 12-0608.04 Expiration Date April 11, 2016 BY Miami-Dade Product Control

YIPING WANG, P.E. FLORIDA REGISTRATION PE #55983 C.A.N. 28677

MIAMI DADE COUNTY

FEB 11 2013

SERIES 8000 HIGH PERFORMANCE UNITIZED CURTAIN WALL SYSTEM (L.M.I.)

NR ARCHITECTURAL PRODUCTS
4348 WESTROADS DRIVE
WEST PALM BEACH, FL. 33407
P: (561) 844 - 1121 F: (561) 844 - 6131

MCY ENGINEERING, INC.
GLAZING CONSULTANTS
8501 SW 124 AVE. STE. 205A
MIAMI, FL. 33183
P: 305.271.0117
F: 786.573.5063
www.MCYEngineering.com
MCY.Engineering@att.net

REVISIONS		
NO.	DATE	DESCRIPTION
1	2/26/12	UPDATE TO FBC2010
2	6/06/12	INCLUDING STRUC. GLAZING OPTION

DATE	02-28-12
SCALE	AS NOTED
DRAWN	S.L.
PROJECT	0922
DRAWING NO.	AD10-19 E01

MAXIMUM WIND AND DEAD LOAD AT ANCHORS					
MULLION		JAMB		CORNER MULLION (EACH SIDE)	
WLm	DLm	WLj	DLj	WLcm	DLcm
LB	LB	LB	LB	LB	LB
10,300	1,100	5,150	550	-	-

IT SHALL BE THE RESPONSIBILITY OF THE CONTRACTOR TO VERIFY WITH ENGINEER OF RECORD THAT THE STRUCTURE WHERE ANCHOR IS ATTACHED IS PROPERLY DESIGNED TO TAKE THE LOADS IMPOSED BY THE CURTAIN WALL SYSTEM. REFER TO THE ANCHOR LOADS SHOWN IN ABOVE CHART

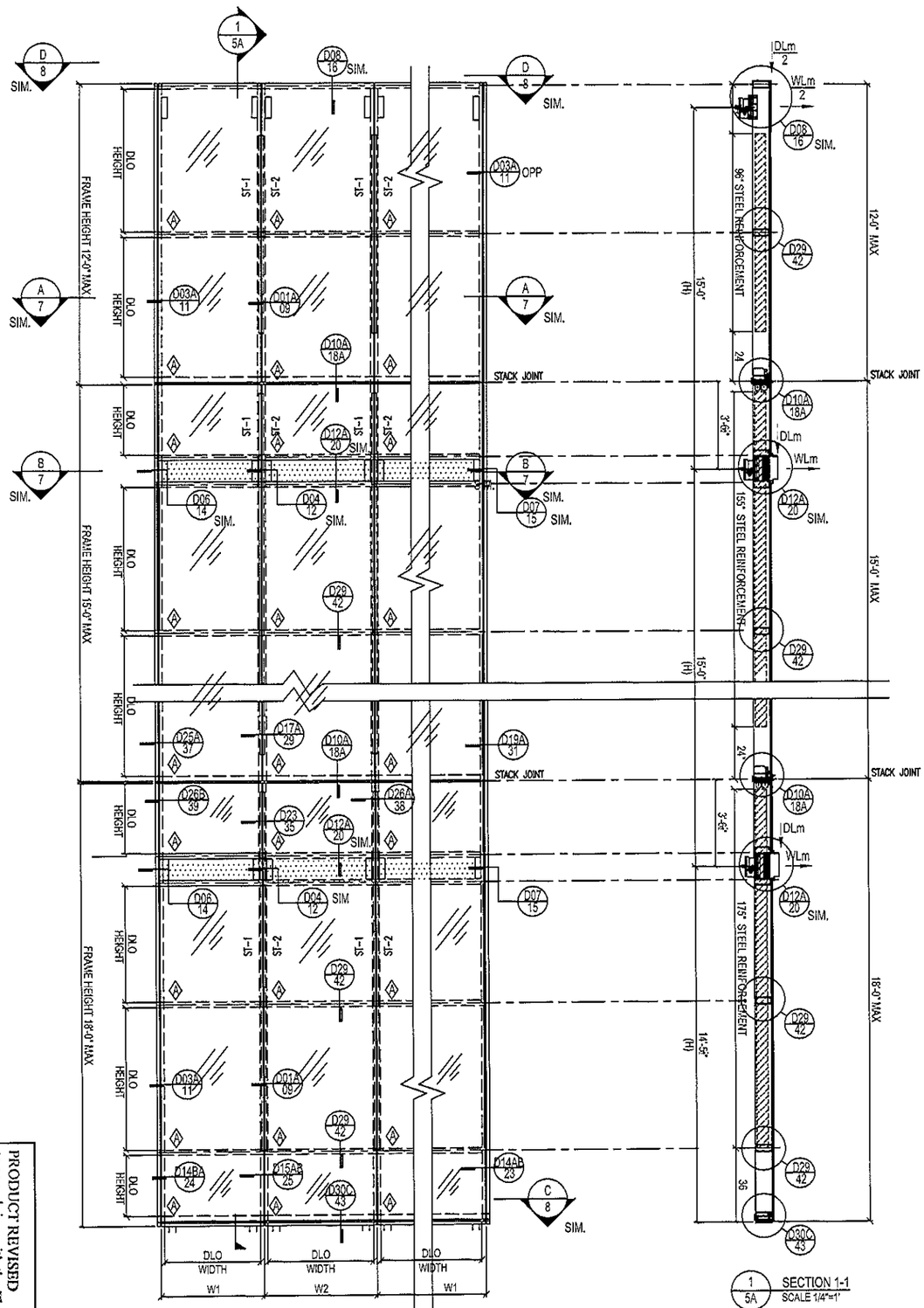

1 / 5A SECTION 1-1
SCALE 1/4"=1'

MULTIPLE SPAN ELEVATION OF CURTAIN WALL
WITH GLASS TYPE A

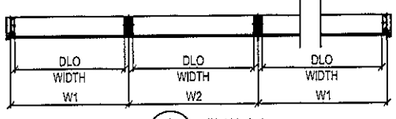

A / 5A PLAN A-A
SCALE 1/4"=1'

MULTIPLE SPAN FRAME DESIGN LOAD			
MULLION TRIBUTARY	FRAME	MAX DESIGN LOAD	
WIDTH (W)	HEIGHT (H) MAX.	POSITIVE	NEGATIVE
(in)	(in)	(PSF)	(PSF)
43-1/2"	180"	+92	-143

- FOR GLASS CAPACITY SEE CHART ON SHEET 6 OF 46
  - (A) GLASS TYPE (LMI)
- $W = \frac{W1 + W2}{2}$
- H - MAX. DISTANCE FROM SUPPORTING ANCHOR TO NEXT SUPPORTING ANCHOR

NEW SHEET

PRODUCT REVISED
as complying with the Florida Building Code
Acceptance No. 12-0609.04
Expiration Date April 7, 2016
By Miami Dade Product Control
MIAMI DADE COUNTY

YIPING WANG, P.E.
FLORIDA REGISTRATION
PE #55983
C.A.N. 28677

FEB 11 2013

SERIES 8000 HIGH PERFORMANCE UNITIZED CURTAIN WALL SYSTEM (L.M.I.)

NR ARCHITECTURAL PRODUCTS
4348 WESTROADS DRIVE
WEST PALM BEACH, FL. 33407
P: (561) 844 - 1121 F: (561) 844 - 6131

MCY ENGINEERING, INC.
GLAZING CONSULTANTS
8501 SW 124 AVE. STE. 205A
MIAMI, FL. 33183
P: 305.271.0117
F: 786.573.5063
www.MCYEngineering.com
MCY.Engineering@All.net

REVISIONS		
NO.	DATE	DESCRIPTION
1	2/26/12	UPDATE TO FBC2010
2	6/06/12	INCLUDING STRUC. GLAZING OPTION

DATE	02-26-12
SCALE	AS NOTED
DRAWN	S.L.
PROJECT	0922
DRAWING NO.	AD10-19 E01A
SHEET	5A of 46

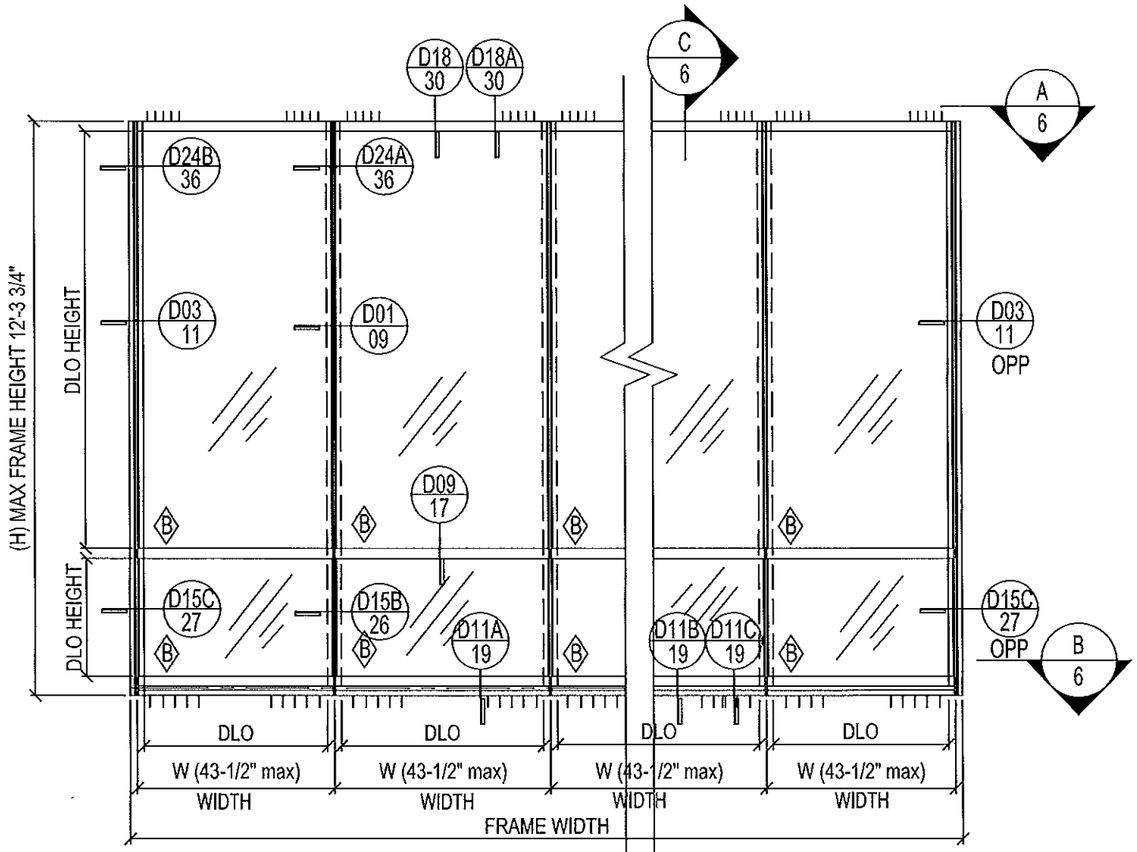

SINGLE SPAN ELEVATION OF CURTAIN WALL

WITH GLASS TYPE B

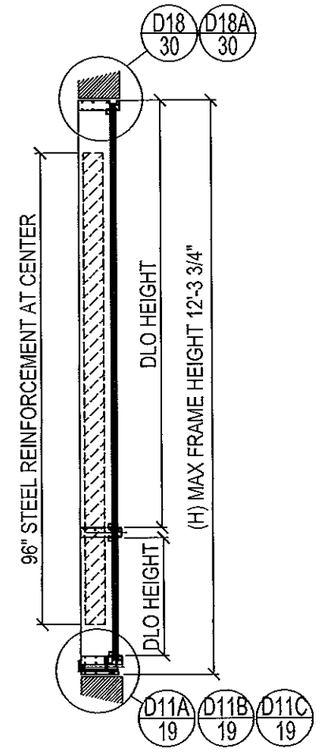

C 6 SECTION SCALE 1/4"=1'

GLASS CAPACITY

NOMINAL DIM		DESIGN LOAD	
D.L.O.	D.L.O.	EXT. (+) INT. (-)	
WIDTH INCHES	HEIGTH INCHES	P.S.F.	P.S.F.
40"	69.5"	+92	-143
38.6"	72"	+92	-143
35.6"	78"	+92	-143
33"	84"	+92	-143

B GLASS TYPE (LMI)

NOTE:
GLASS CAPACITIES ON THIS SHEET ARE BASED ON ASTM E1300-02/04 (3 SEC GUSTS)

SINGLE SPAN FRAME DESIGN LOAD			
MULLION TRIBUTARY	FRAME	MAX DESIGN LOAD	
WIDTH (W)	HEIGHT (H)	POSITIVE	NEGATIVE
(in)	(in)	(PSF)	(PSF)
43-1/2"	147.25"	+92	-143

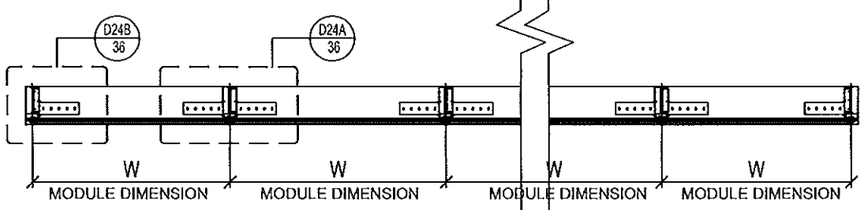

A 6 HEADER PLAN SCALE 1/4"=1'

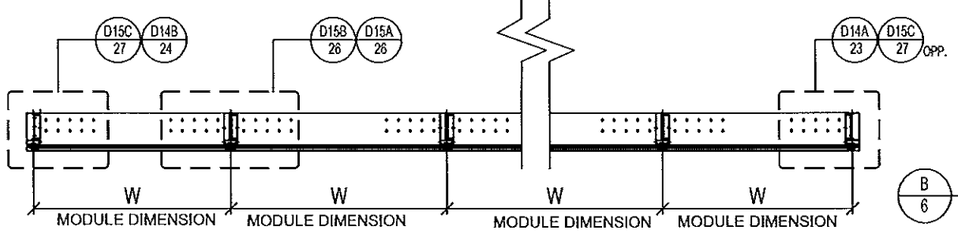

B 6 SILL PLAN SCALE 1/4"=1'

FEB 1 1 2013

PRODUCT REVISED
as complying with the Florida Building Code
Acceptance No 12-0608.04
Expiration Date April 7, 2016
By Manuel Perez
Miami Dade Product Control

MIAMI DADE COUNTY

YIPING WANG, P.E.
FLORIDA REGISTRATION
PE #55983
C.A.N. 28677

REVISIONS		
NO.	DATE	DESCRIPTION
1	2/26/12	UPDATE TO FBC2010
2	6/06/12	INCLUDING STRUC. GLAZING OPTION

MCY ENGINEERING, INC.
GLAZING CONSULTANTS
8501 SW 124 AVE. STE. 205A
MIAMI, FL. 33183
P: 305.271.0117
F: 786.573.5063
www.MCYEngineering.com
MCY.Engineering@ATL.net

SERIES 8000 HIGH PERFORMANCE UNITIZED CURTAIN WALL SYSTEM (L.M.I.)

NR ARCHITECTURAL PRODUCTS
4348 WESTROADS DRIVE
WEST PALM BEACH, FL. 33407
P: (561) 844 - 1121 F: (561) 844 - 6131

DATE	02-26-12
SCALE	AS NOTED
DRAWN	S.L.
PROJECT	0922

DRAWING NO. AD10-19 E02

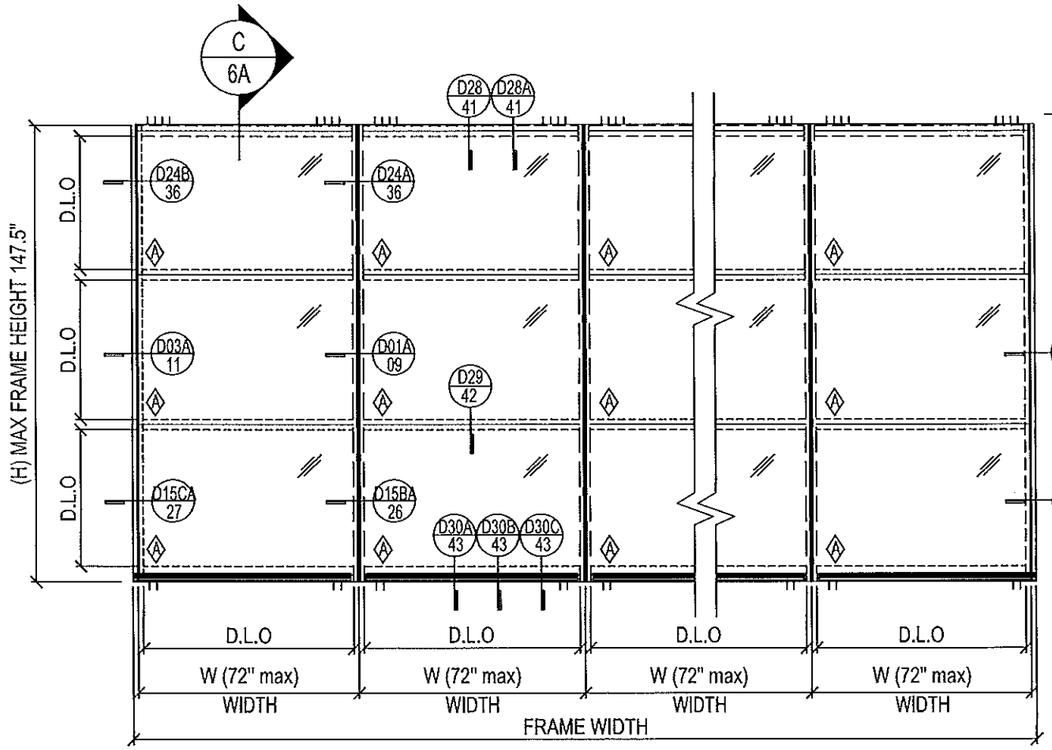

SINGLE SPAN ELEVATION OF CURTAIN WALL
WITH GLASS TYPE A

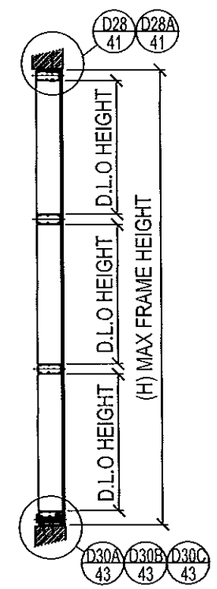

C / 6A SECTION
SCALE 1/4"=1'

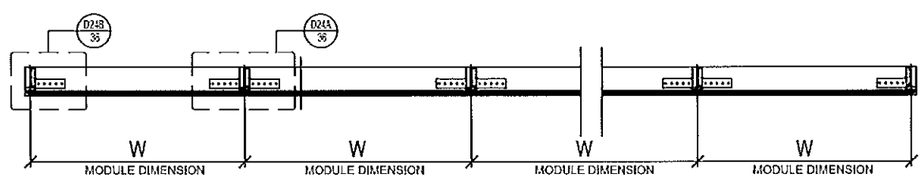

A / 6A HEADER PLAN
SCALE 1/4"=1'

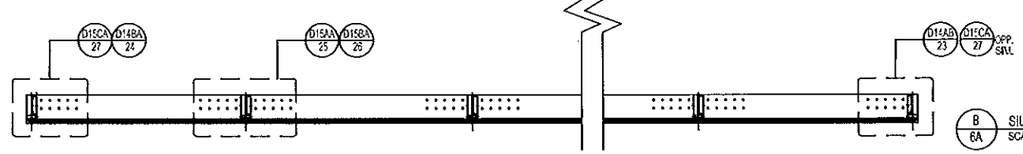

B / 6A SILL PLAN
SCALE 1/4"=1'

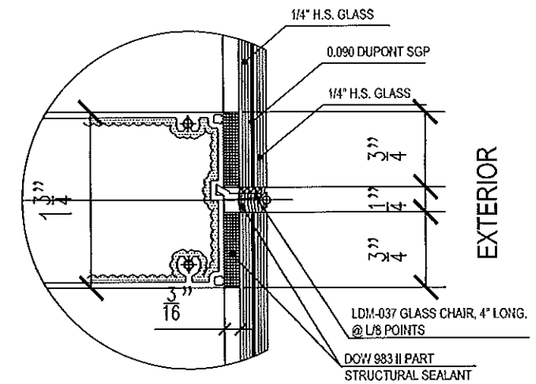

GLASS TYPE A

GLASS CAPACITY

NOMINAL DIM		DESIGN LOAD EXT. (+) INT. (–)	
D.L.O.	D.L.O.		
WIDTH INCHES	HEIGTH INCHES	P.S.F.	P.S.F.
≤ 76"	≤ 73 3/4"	+100	–73
≤ 68 1/2"	≤ 47"	+100	–164

A GLASS TYPE (LMI)

NOTE:
GLASS CAPACITIES ON THIS SHEET ARE BASED ON ASTM E1300-02/04 (3 SEC GUSTS)

SINGLE SPAN FRAME DESIGN LOAD			
MULLION TRIBUTARY	FRAME MAX.	MAX DESIGN LOAD	
WIDTH (W)	HEIGHT (H)	POSITIVE	NEGATIVE
(in)	(in)	(PSF)	(PSF)
≤ 43-1/2"	≤ 147.25"	+100	–143

$$W = \frac{W1 + W2}{2}$$

NEW SHEET

PRODUCT REVISED
as complying with the Florida Building Code
Acceptance No 12-0508.04
Expiration Date April 1, 2016
By Manuel Perez
Miami-Dade Product Control

MIAMI DADE COUNTY

YIPING WANG, P.E.
FLORIDA REGISTRATION
PE #55983
C.A.N. 28677

FEB 11 2013

REVISIONS			
NO.	DATE	DESCRIPTION	
1	2/28/12	UPDATE TO FBC2010	
2	6/06/12	INCLUDING STRUC. GLAZING OPTION	

MCY ENGINEERING, INC.
GLAZING CONSULTANTS
8501 SW 124 AVE. STE. 305A
MIAMI, FL. 33183
P: 305.271.0117
F: 786.573.5063
www.MCYEngineering.com
MCY.Engineering@AIL.net

SERIES 8000 HIGH PERFORMANCE UNITIZED CURTAIN WALL SYSTEM (L.M.I.)

NR ARCHITECTURAL PRODUCTS
4348 WESTROADS DRIVE
WEST PALM BEACH, FL. 33407
P: (561) 844 - 1121 F: (561) 844 - 6131

DATE	02-28-12
SCALE	AS NOTED
DRAWN	S.I.
PROJECT	0922

DRAWING NO.
AD10–19
E02A

SHEET 6A of 46

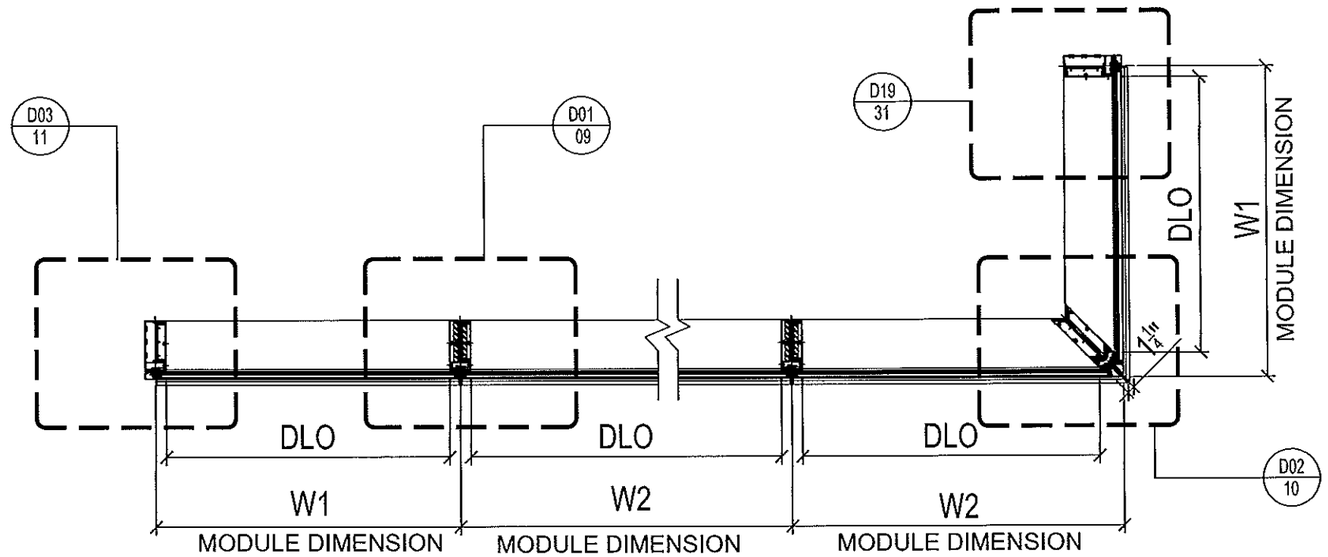

A / 7 PLAN A-A
SCALE 1/4"=1'

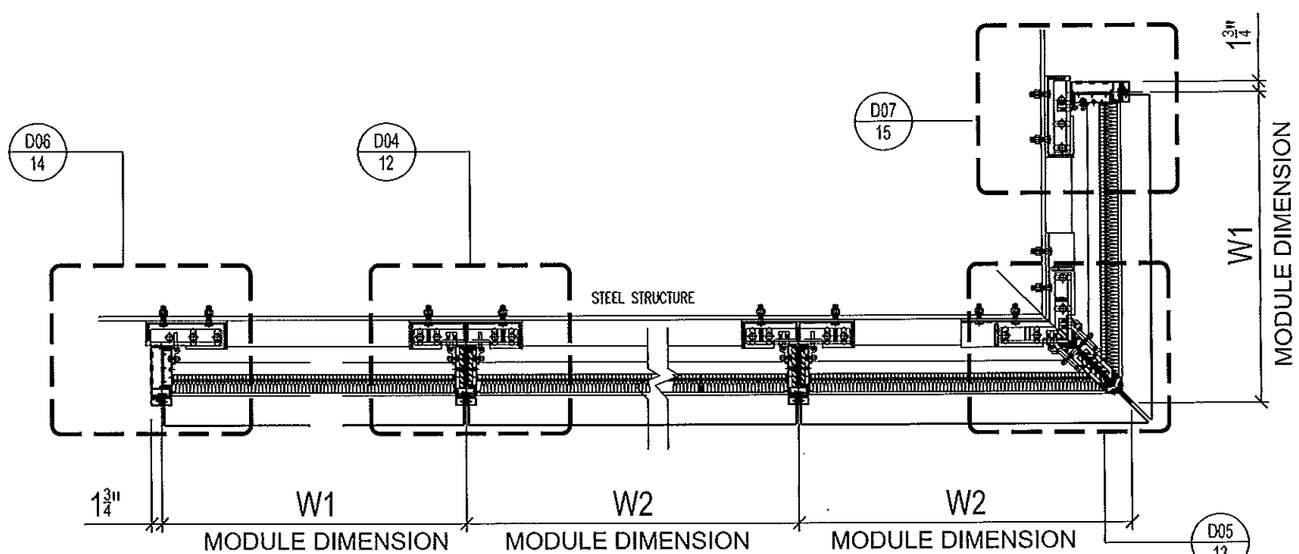

B / 7 PLAN B-B
SCALE 1/4"=1'

FEB 1 1 2013

PRODUCT REVISED
as complying with the Florida
Building Code
Acceptance No 12-0922.04
Expiration Date April 1, 2016
By Manuel Gres
Miami Dade Product Control

MIAMI DADE COUNTY

YIPING WANG, P.E.
FLORIDA REGISTRATION
PE #55983
C.A.N. 28677

REVISIONS		
NO	DATE	DESCRIPTION
1	2/26/12	UPDATE TO FBC2010
2	6/06/12	INCLUDING STRUC. GLAZING OPTION

MCY ENGINEERING, INC.
GLAZING CONSULTANTS
8501 SW 124 AVE. STE. 305A
MIAMI, FL 33183
P: 305.271.0117
F: 786.573.5063
www.MCYEngineering.com
MCY.Engineering@Att.net

SERIES 8000 HIGH PERFORMANCE UNITIZED CURTAIN WALL SYSTEM (L.M.I.)

NR ARCHITECTURAL PRODUCTS
4348 WESTROADS DRIVE
WEST PALM BEACH, FL 33407
P: (561) 844 - 1121 F: (561) 844 - 6131

DATE	02-26-12
SCALE	AS NOTED
DRAWN	S.L.
PROJECT	0922

DRAWING NO.
AD10-19
PM01

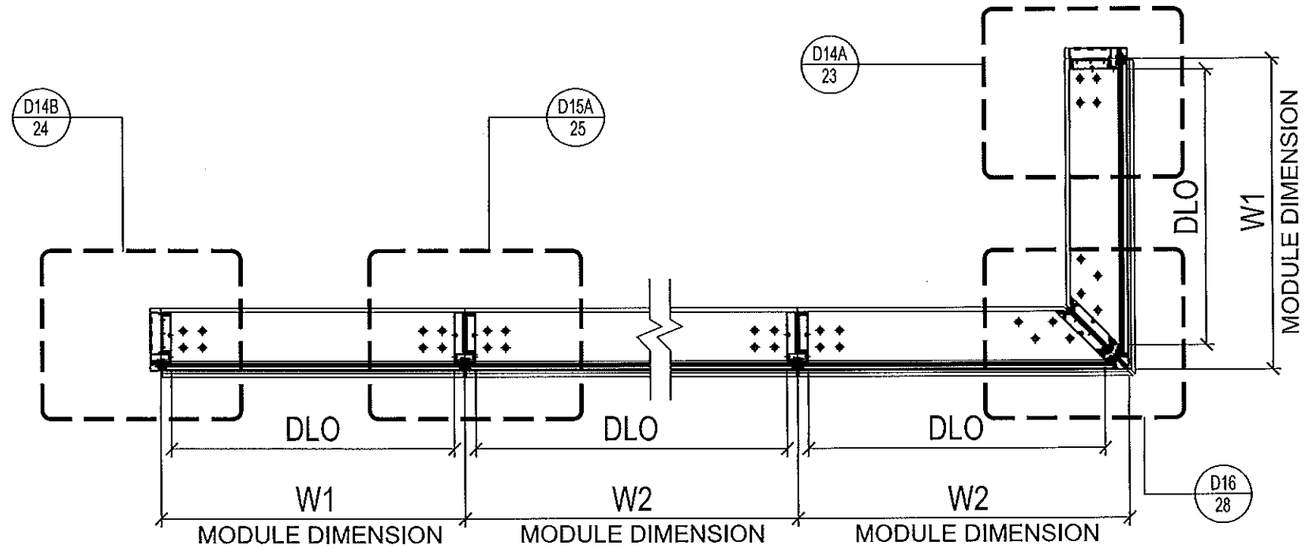

C / 8 PLAN C-C
SCALE 1/4"=1'

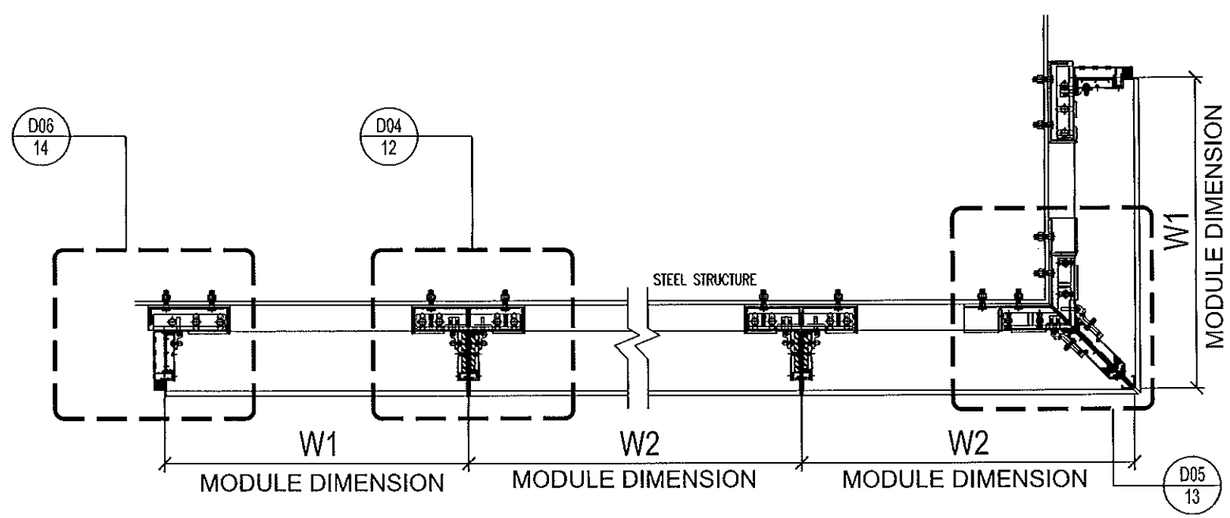

D / 8 PLAN D-D
SCALE 1/4"=1'

FEB 1 1 2013

PRODUCT REVISED
as complying with the Florida Building Code
Acceptance No. 12-0608.04
Expiration Date April 4, 2016
By Manuel Sera
Miami Dade Product Control

MIAMI DADE COUNTY

YIPING WANG, P.E.
FLORIDA REGISTRATION
PE #55983
C.A.N. 28677

REVISIONS

NO.	DATE	DESCRIPTION
1	12/28/12	UPDATE TO FBC2010 INCLUDING STRUC. GLAZING OPTION
2	6/06/12	

MCY ENGINEERING, INC.
GLAZING CONSULTANTS
8501 SW 124 AVE. STE. 203A
MIAMI, FL 33183
P: 305.271.0117
F: 786.573.5063
www.MCYEngineering.com
MCY.Engineering@AIL.net

SERIES 8000 HIGH PERFORMANCE UNITIZED CURTAIN WALL SYSTEM (L.M.I.)

NR ARCHITECTURAL PRODUCTS
4348 WESTROADS DRIVE
WEST PALM BEACH, FL. 33407
P: (561) 844 - 1121 F: (561) 844 - 6131

DATE	02-28-12
SCALE	AS NOTED
DRAWN	S.L.
PROJECT	0922

DRAWING NO.
AD10-19
PM02

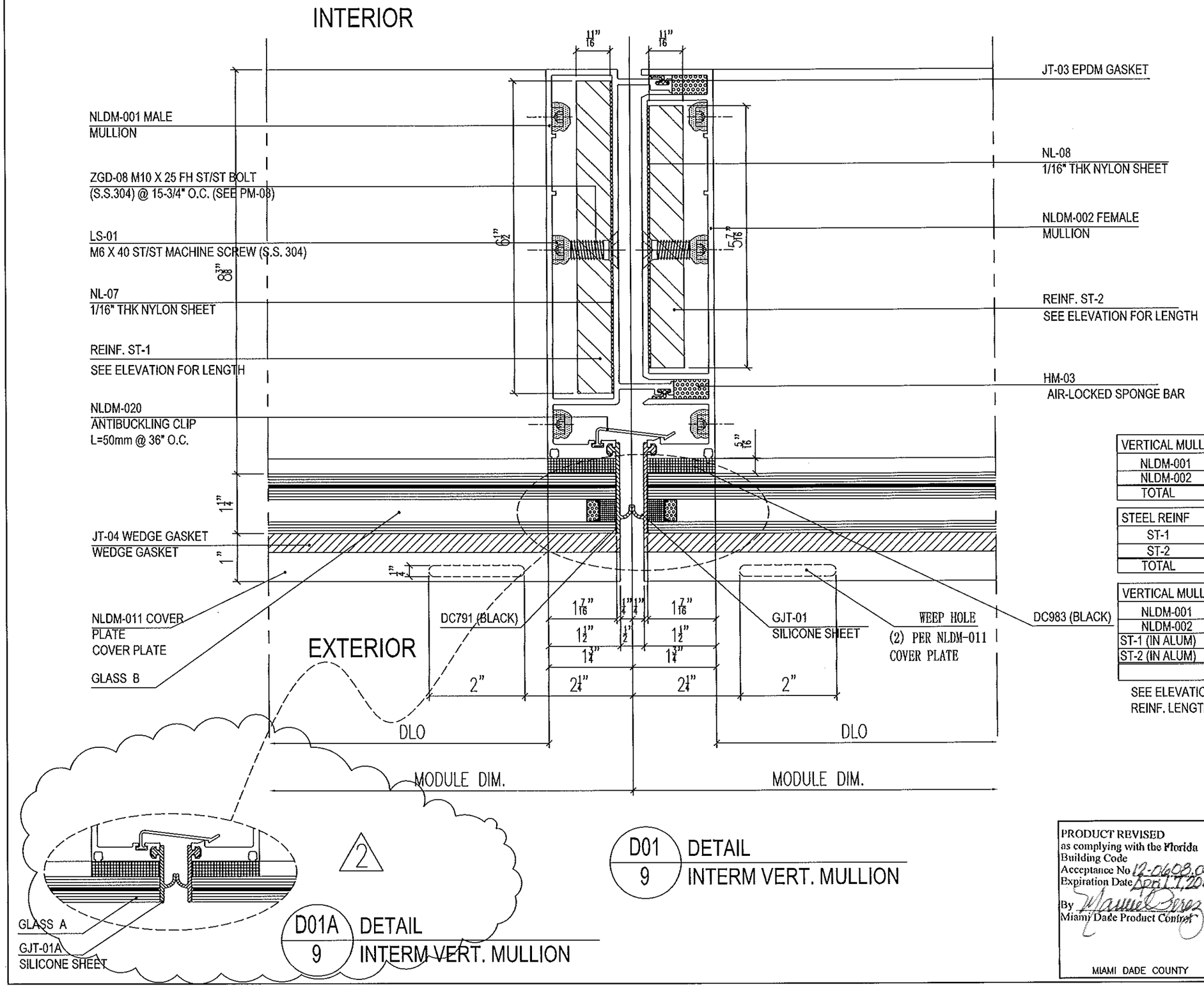

VERTICAL MULL	Ix	Sx
NLDM-001	20.617	4.921
NLDM-002	18.915	4.448
TOTAL	39.532	9.297

STEEL REINF	Ix	Sx
ST-1	16.042	4.954
ST-2	9.471	3.486
TOTAL	25.513	7.879

VERTICAL MULL	Ix	Sx
NLDM-001	20.617	4.921
NLDM-002	18.915	4.448
ST-1 (IN ALUM)	46.522	-
ST-2 (IN ALUM)	27.466	-
	113.520	

SEE ELEVATION FOR STEEL REINF. LENGTH

FEB 1 1 2013

PRODUCT REVISED
as complying with the Florida Building Code
Acceptance No 12-0608.04
Expiration Date Apr 1, 2016
By Maria Perez
Miami Dade Product Control

MIAMI DADE COUNTY

YIPING WANG, P.E.
FLORIDA REGISTRATION
PE #55983
C.A.N. 28677

REVISIONS		
NO.	DATE	DESCRIPTION
1	2/26/12	UPDATE TO FBC2010
2	6/06/12	INCLUDING STRUC. GLAZING OPTION

MCY ENGINEERING, INC.
GLAZING CONSULTANTS
8501 SW 124 AVE. STE. 203A
MIAMI, FL. 33183
P: 305.271.0117
F: 786.573.5063
www.MCYEngineering.com
MCY.Engineering@AOL.net

SERIES 8000 HIGH PERFORMANCE UNITIZED CURTAIN WALL SYSTEM (L.M.I.)

NR ARCHITECTURAL PRODUCTS
4348 WESTROADS DRIVE
WEST PALM BEACH, FL. 33407
P: (561) 844 - 1121 F: (561) 844 - 6131

DATE	02-26-12
SCALE	AS NOTED
DRAWN	S.L
PROJECT	0922

DRAWING NO.
AD10-19
D01

SHEET 9 of 46

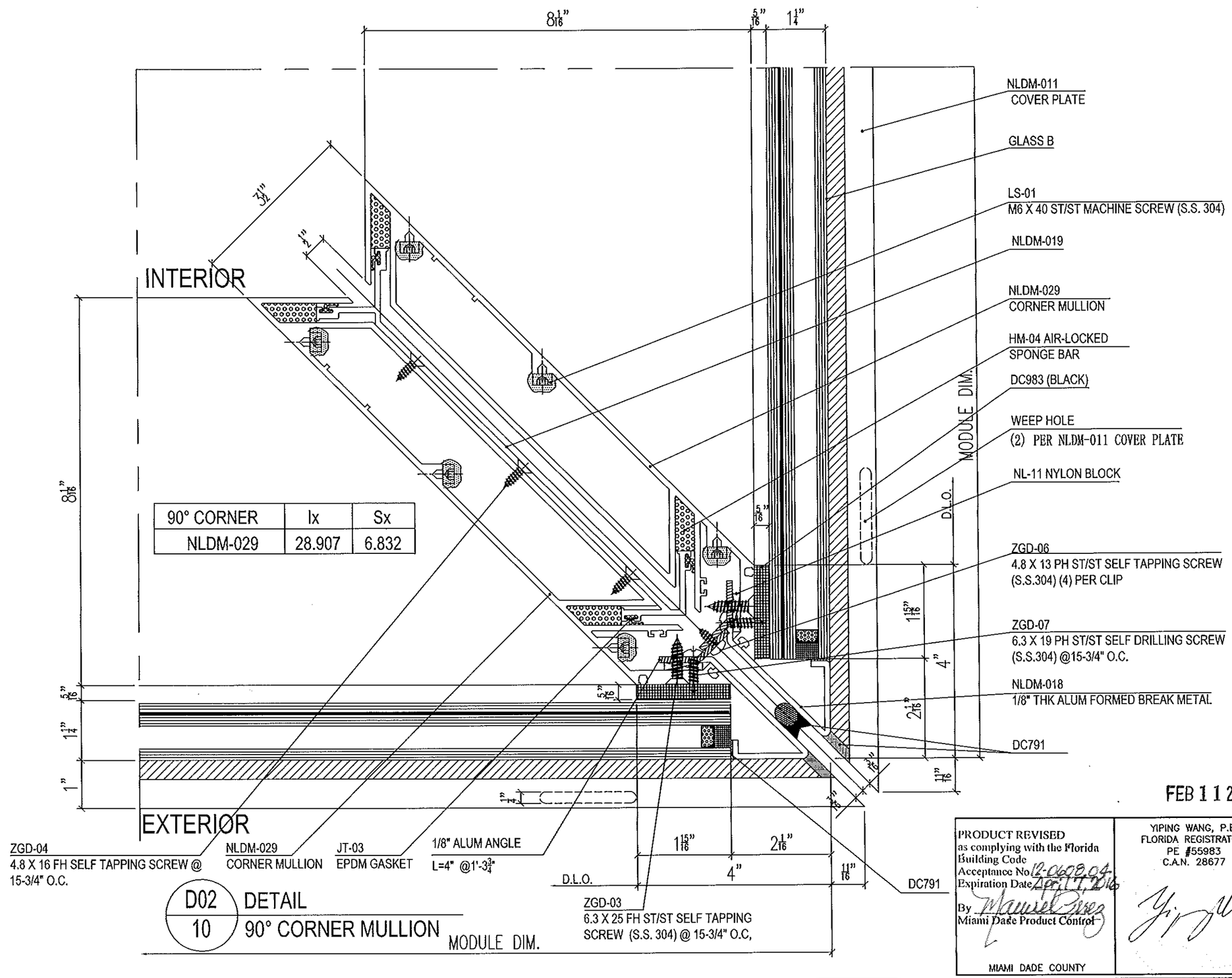

90° CORNER	Ix	Sx
NLDM-029	28.907	6.832

D02 / 10 DETAIL
90° CORNER MULLION

FEB 1 1 2013

PRODUCT REVISED
as complying with the Florida
Building Code
Acceptance No. 12-0608.04
Expiration Date Apr 11, 2016
By Manuel Diaz
Miami Dade Product Control

MIAMI DADE COUNTY

YIPING WANG, P.E.
FLORIDA REGISTRATION
PE #55983
C.A.N. 28677

REVISIONS		
NO.	DATE	DESCRIPTION
1	2/28/12	UPDATE TO FBC2010
2	6/06/12	INCLUDING STRUC. GLAZING OPTION

MCY ENGINEERING, INC.
GLAZING CONSULTANTS
8501 SW 124 AVE. STE. 205A
MIAMI, FL. 33183
P: 305.271.0117
F: 786.573.5063
www.MCYEngineering.com
MCY.Engineering@AIL.net

SERIES 8000 HIGH PERFORMANCE UNITIZED CURTAIN WALL SYSTEM (L.M.I.)

NR ARCHITECTURAL PRODUCTS
4348 WESTROADS DRIVE
WEST PALM BEACH, FL. 33407
P: (561) 844 - 1121 F: (561) 844 - 6131

DATE	02-26-12
SCALE	AS NOTED
DRAWN	S.L.
PROJECT	0922

DRAWING NO.
AD10-19
D02

SHEET 10 of 46

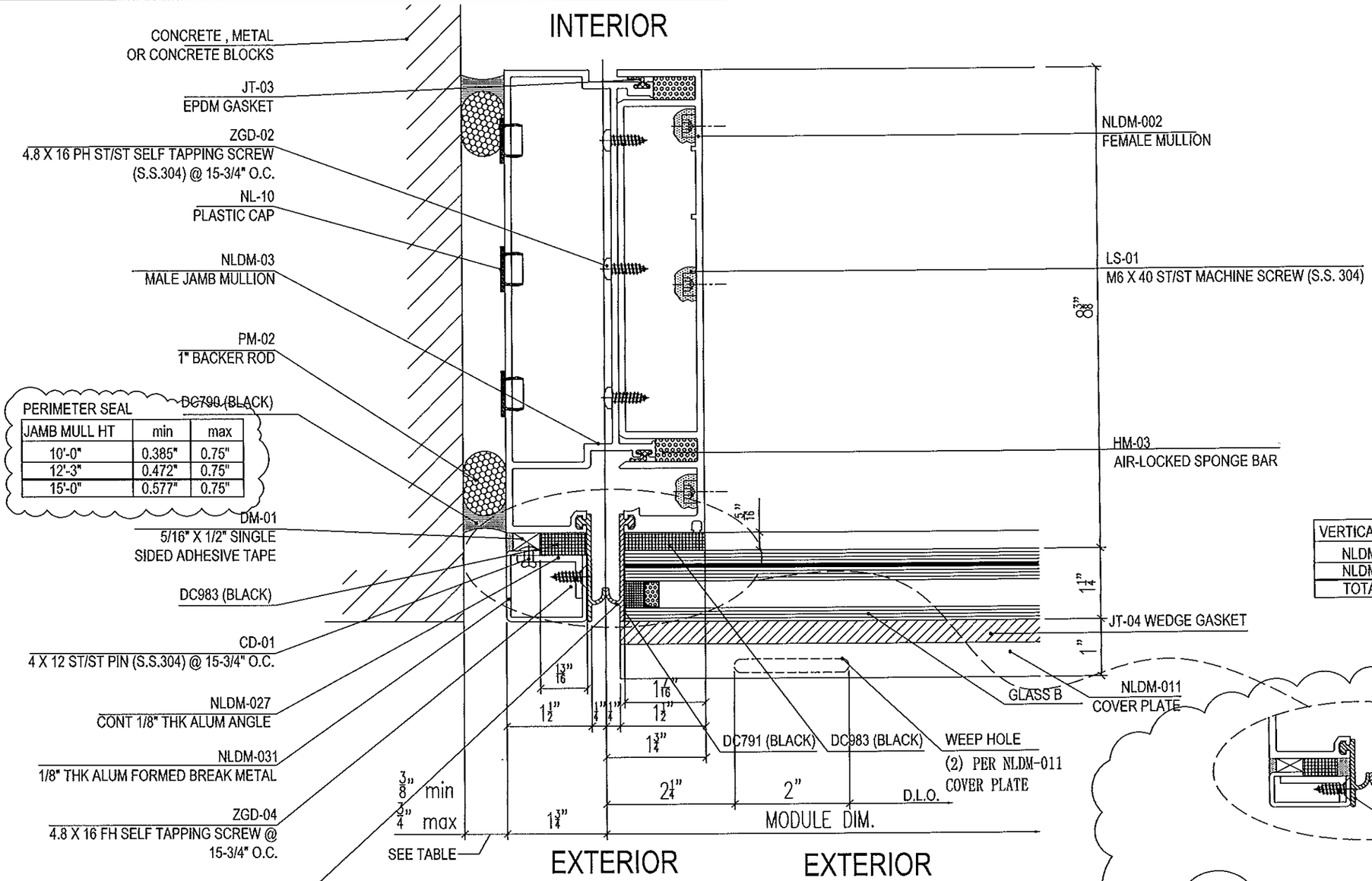

PERIMETER SEAL

JAMB MULL HT	min	max
10'-0"	0.385"	0.75"
12'-3"	0.472"	0.75"
15'-0"	0.577"	0.75"

VERTICAL MULL	Ix	Sx
NLDM-003	21.525	5.081
NLDM-002	18.915	4.448
TOTAL	40.440	9.511

D03 / 11 DETAIL JAMB VERT MULLION

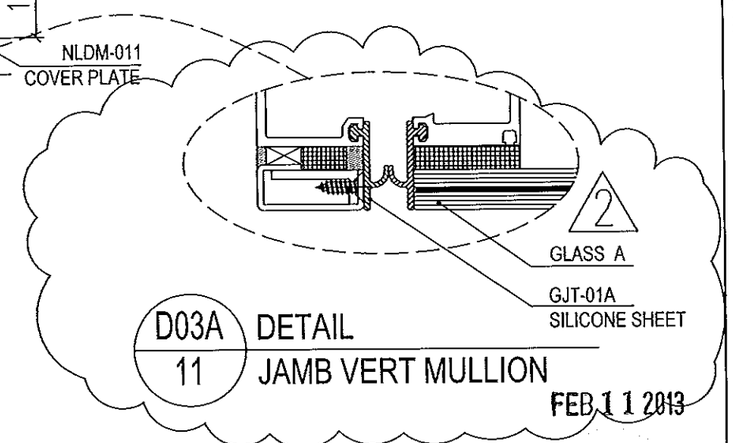

D03A / 11 DETAIL JAMB VERT MULLION

FEB 1 1 2013

PRODUCT REVISED
as complying with the Florida Building Code
Acceptance No. 12-0609.04
Expiration Date April 1, 2016
By Manuel Grau
Miami Dade Product Control

MIAMI DADE COUNTY

YIPING WANG, P.E.
FLORIDA REGISTRATION
PE #55983
C.A.N. 28677

REVISIONS		
NO.	DATE	DESCRIPTION
1	2/26/12	UPDATE TO FBC2010
2	6/06/12	INCLUDING STRUC. GLAZING OPTION

MCY ENGINEERING, INC.
GLAZING CONSULTANTS
8501 SW 124 AVE. STE. 205A
MIAMI, FL. 33183
P: 305.271.0117
F: 786.573.5063
www.MCYEngineering.com
MCY.Engineering@ALL.net

SERIES 8000 HIGH PERFORMANCE UNITIZED CURTAIN WALL SYSTEM (L.M.I.)

NR ARCHITECTURAL PRODUCTS
4348 WESTROADS DRIVE
WEST PALM BEACH, FL. 33407
P: (561) 844 - 1121 F: (561) 844 - 6131

DATE	02-26-12
SCALE	AS NOTED
DRAWN	S.L
PROJECT	0922

DRAWING NO. AD10-19 D03

SHEET 11 of 46

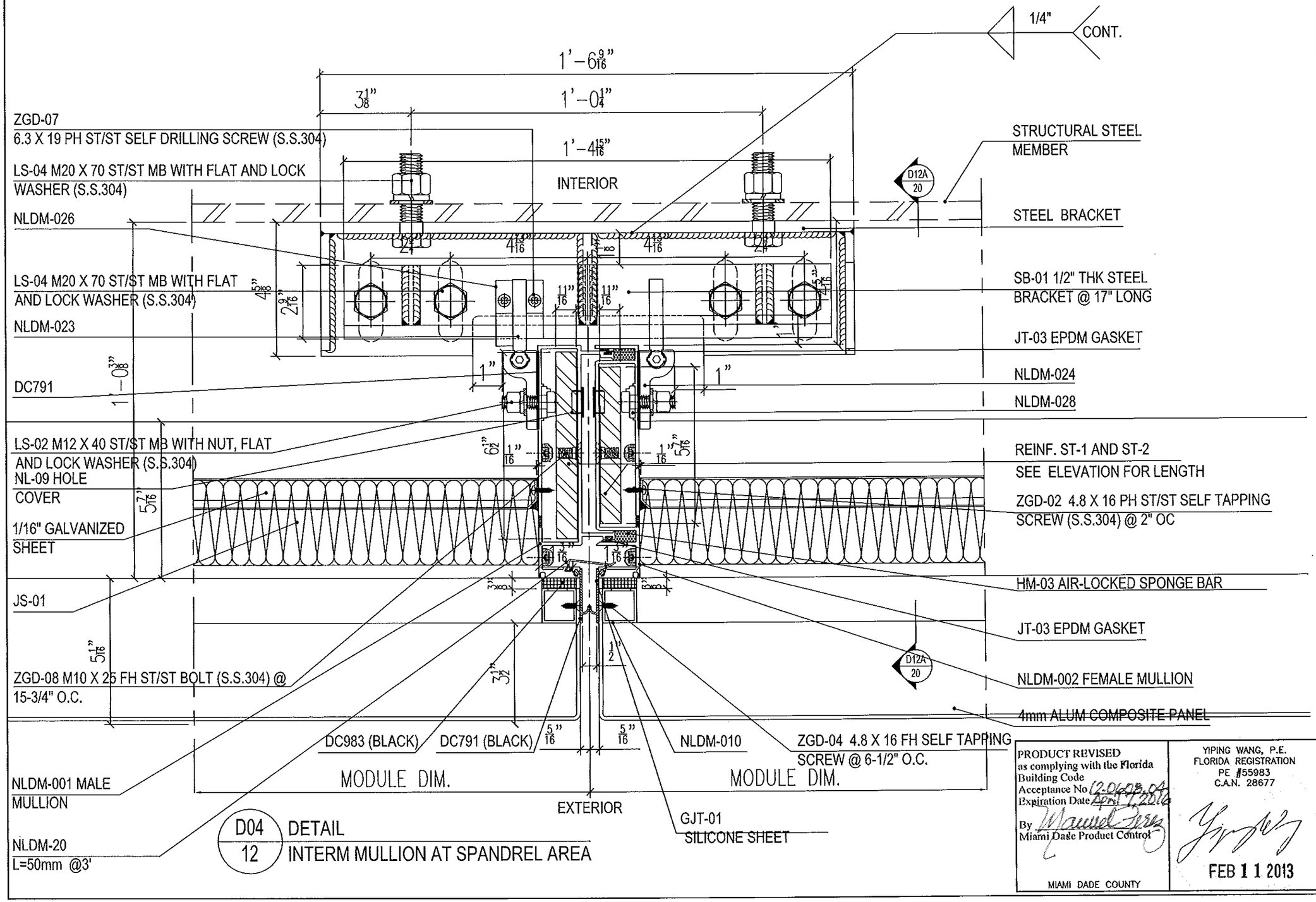

D04 / 12 DETAIL
INTERM MULLION AT SPANDREL AREA

PRODUCT REVISED
as complying with the Florida Building Code
Acceptance No 12-0605.04
Expiration Date April 17, 2014
By Manuel Perez
Miami Dade Product Control

MIAMI DADE COUNTY

YIPING WANG, P.E.
FLORIDA REGISTRATION
PE #55983
C.A.N. 28677

FEB 11 2013

REVISIONS		
NO.	DATE	DESCRIPTION
1	12/28/12	UPDATE TO FBC2010
2	5/06/12	INCLUDING STRUC. GLAZING OPTION

MCY ENGINEERING, INC.
GLAZING CONSULTANTS
8501 SW 124 AVE. STE. 305A
MIAMI, FL. 33183
P: 305.271.0117
F: 786.573.5063
www.MCYEngineering.com
MCY.Engineering@AIL.net

SERIES 8000 HIGH PERFORMANCE UNITIZED CURTAIN WALL SYSTEM (L.M.I.)

NR ARCHITECTURAL PRODUCTS
4348 WESTROADS DRIVE
WEST PALM BEACH, FL. 33407
P: (561) 844 - 1121 F: (561) 844 - 6131

DATE	02-28-12
SCALE	AS NOTED
DRAWN	S.L.
PROJECT	0922

DRAWING NO.
AD10-19
D04

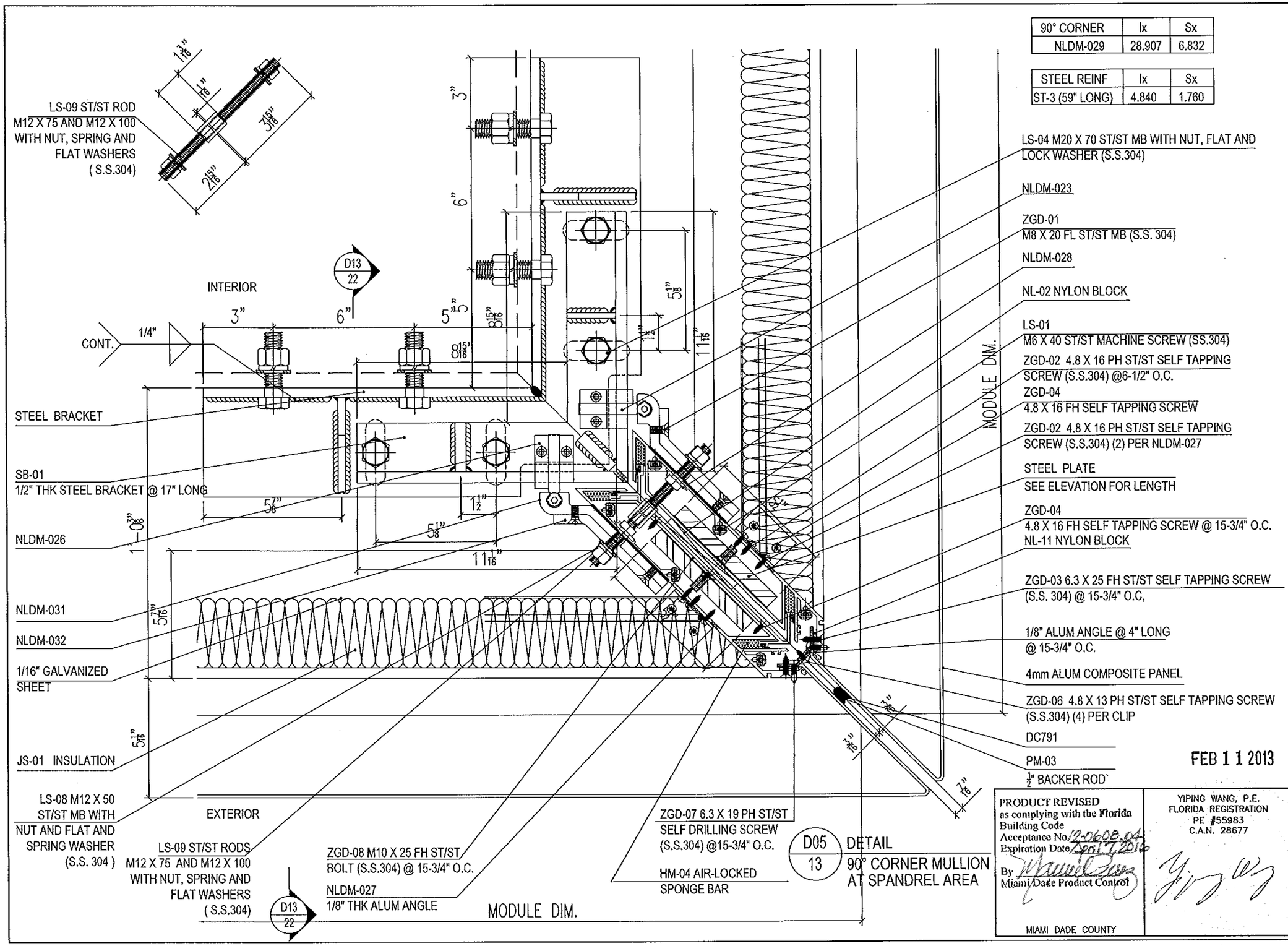

90° CORNER	Ix	Sx
NLDM-029	28.907	6.832

STEEL REINF	Ix	Sx
ST-3 (59" LONG)	4.840	1.760

FEB 1 1 2013

PRODUCT REVISED
as complying with the Florida
Building Code
Acceptance No. 12-0608.04
Expiration Date Sept 7, 2016
By Miami-Dade Product Control

MIAMI DADE COUNTY

YIPING WANG, P.E.
FLORIDA REGISTRATION
PE #55983
C.A.N. 28677

REVISIONS

NO.	DATE	DESCRIPTION
1	12/28/12	UPDATE TO FBC2010
2	6/06/12	INCLUDING STRUC. GLAZING OPTION

MCY ENGINEERING, INC.
GLAZING CONSULTANTS
8501 SW 124 AVE. STE. 305A
MIAMI, FL. 33183
P: 305.271.0117
F: 786.573.5063
www.MCYEngineering.com
MCY.Engineering@ATT.net

SERIES 8000 HIGH PERFORMANCE UNITIZED CURTAIN WALL SYSTEM (L.M.I.)

NR ARCHITECTURAL PRODUCTS
4348 WESTROADS DRIVE
WEST PALM BEACH, FL. 33407
P: (561) 844 - 1121 F: (561) 844 - 6131

DATE	02-26-12
SCALE	AS NOTED
DRAWN	S.L
PROJECT	0922

DRAWING NO.
AD10-19
D05

SHEET 13 of 46

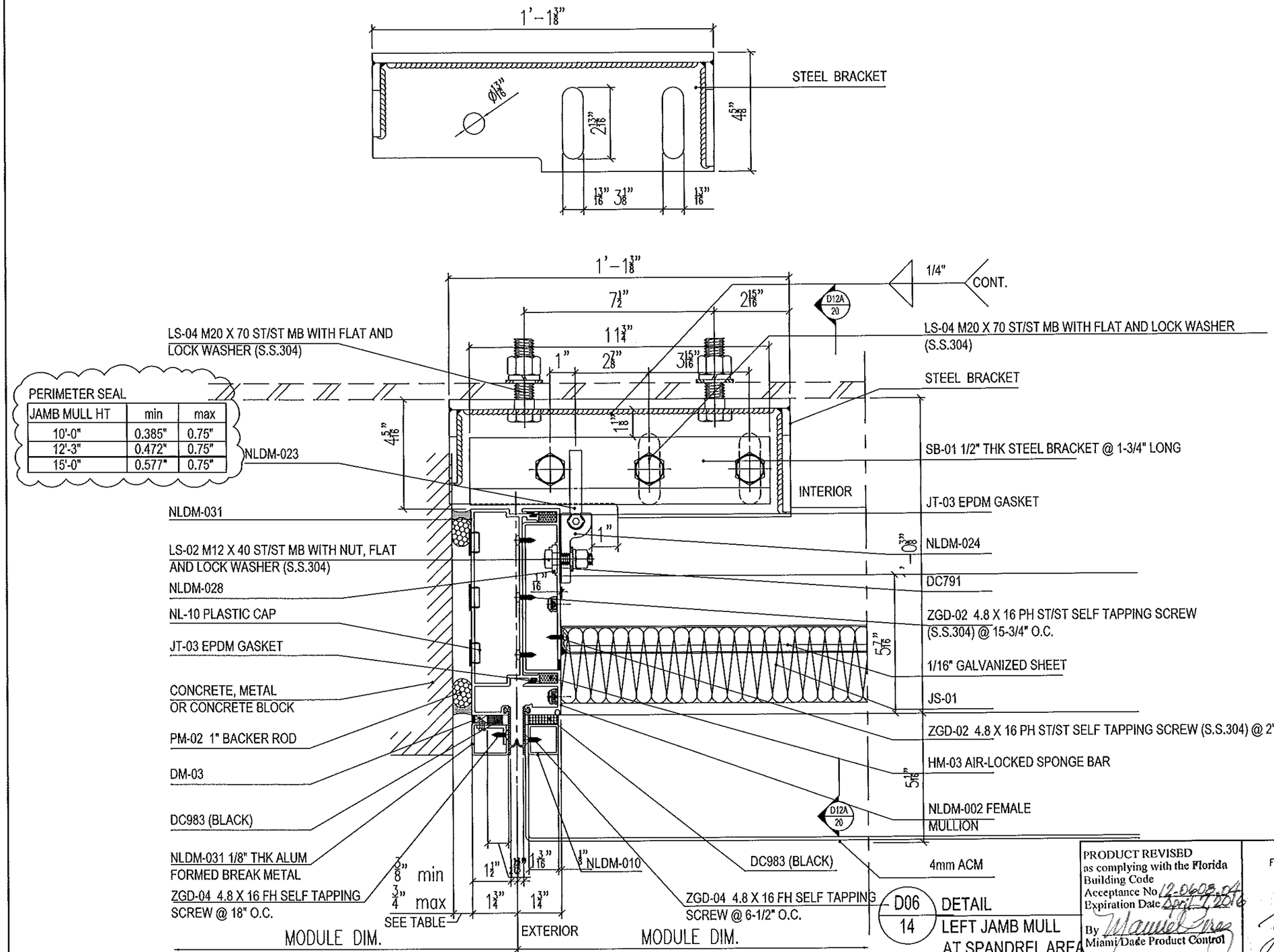

PERIMETER SEAL		
JAMB MULL HT	min	max
10'-0"	0.385"	0.75"
12'-3"	0.472"	0.75"
15'-0"	0.577"	0.75"

FEB 1 1 2013

PRODUCT REVISED as complying with the Florida Building Code Acceptance No 12-0608.04 Expiration Date April 7, 2016
By Manuel Grau
Miami-Dade Product Control
MIAMI DADE COUNTY

YIPING WANG, P.E.
FLORIDA REGISTRATION
PE #55983
C.A.N. 28677

REVISIONS		
NO.	DATE	DESCRIPTION
1	2/28/12	UPDATE TO FBC2010
2	5/06/12	INCLUDING STRUC. GLAZING OPTION

MCY ENGINEERING, INC.
GLAZING CONSULTANTS
8501 SW 124 AVE. STE. 205A MIAMI, FL. 33183
P: 305.271.0117
F: 786.573.5063
www.MCYEngineering.com
MCY.Engineering@AOL.net

SERIES 8000 HIGH PERFORMANCE UNITIZED CURTAIN WALL SYSTEM (L.M.I.)

NR ARCHITECTURAL PRODUCTS
4348 WESTROADS DRIVE
WEST PALM BEACH, FL. 33407
P: (561) 844 - 1121 F: (561) 844 - 6131

DATE	02-26-12
SCALE	AS NOTED
DRAWN	S.L.
PROJECT	0922

DRAWING NO.
AD10-19
D06

SHEET 14 of 46

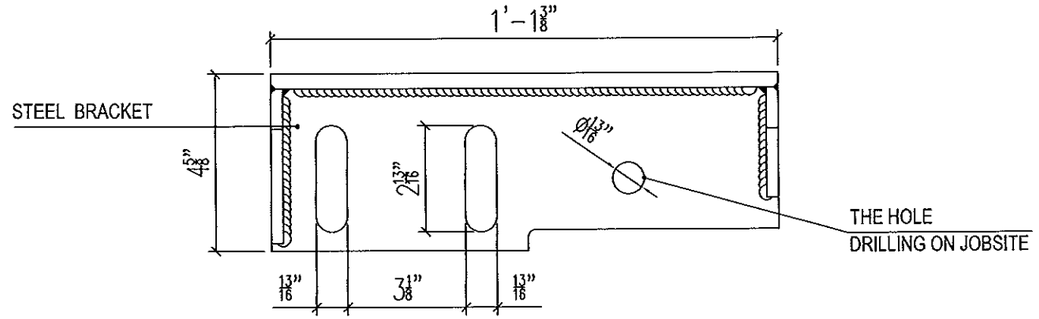

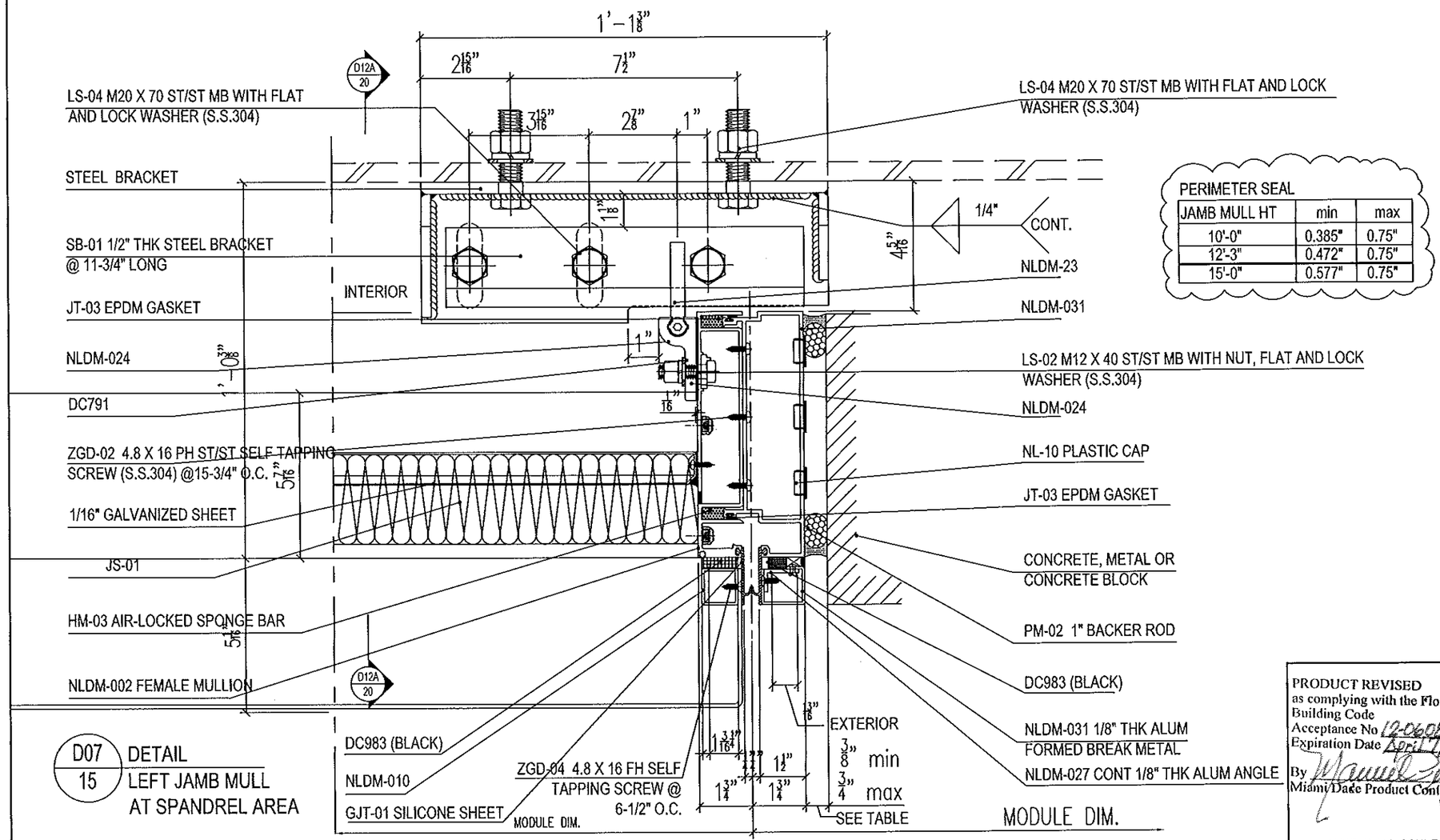

PERIMETER SEAL

JAMB MULL HT	min	max
10'-0"	0.385"	0.75"
12'-3"	0.472"	0.75"
15'-0"	0.577"	0.75"

D07 / 15 DETAIL
LEFT JAMB MULL
AT SPANDREL AREA

FEB 1 1 2013

PRODUCT REVISED
as complying with the Florida Building Code
Acceptance No 12-0609.04
Expiration Date April 7, 2016
By Manuel Sanz
Miami-Dade Product Control

MIAMI DADE COUNTY

YIPING WANG, P.E.
FLORIDA REGISTRATION
PE #55983
C.A.N. 28677

REVISIONS

NO.	DATE	DESCRIPTION
1	2/28/12	UPDATE TO FBC2010
2	6/06/12	INCLUDING STRUC. GLAZING OPTION

MCY ENGINEERING, INC.
GLAZING CONSULTANTS
8501 SW 124 AVE. STE. 205A
MIAMI, FL. 33183
P: 305.271.0117
F: 786.573.3063
www.MCYEngineering.com
MCY.Engineering@AIL.net

SERIES 8000 HIGH PERFORMANCE UNITIZED CURTAIN WALL SYSTEM (L.M.I.)

NR ARCHITECTURAL PRODUCTS
4348 WESTROADS DRIVE
WEST PALM BEACH, FL 33407
P: (561) 844 - 1121 F: (561) 844 - 6131

DATE	02-28-12
SCALE	AS NOTED
DRAWN	S.L.
PROJECT	0922

DRAWING NO.
AD10-19
D07

SHEET 15 of 46

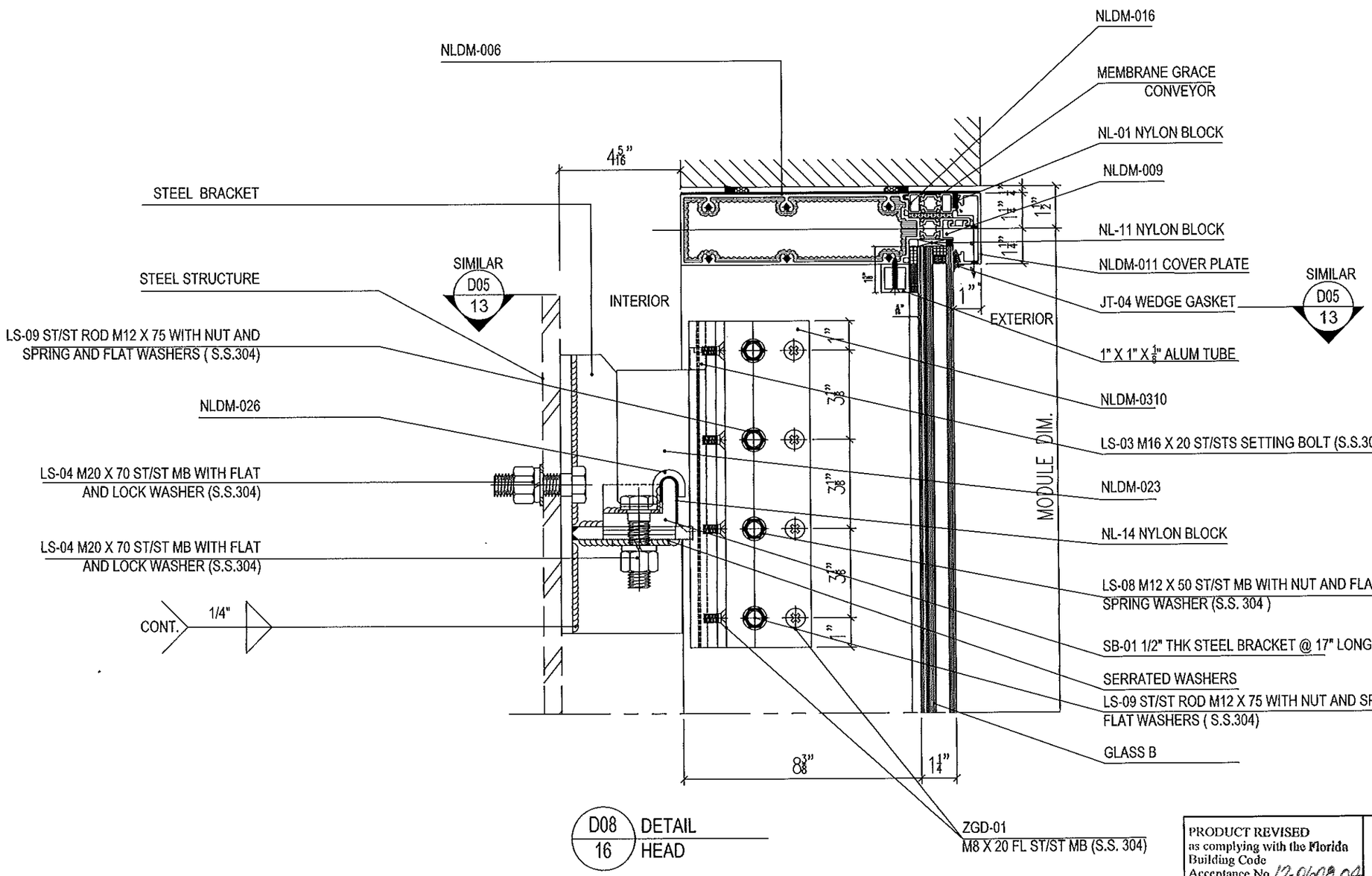

D08 / 16 DETAIL HEAD

FEB 1 1 2013

PRODUCT REVISED
as complying with the Florida Building Code
Acceptance No 12-0609.04
Expiration Date April 4, 2016
By Miami Dade Product Control

MIAMI DADE COUNTY

YIPING WANG, P.E.
FLORIDA REGISTRATION
PE #55983
C.A.N. 28677

REVISIONS		
NO.	DATE	DESCRIPTION
1	2/28/12	UPDATE TO FBC2010
2	6/06/12	INCLUDING STRUC. GLAZING OPTION

MCY ENGINEERING, INC.
GLAZING CONSULTANTS
8501 SW 124 AVE. STE. 205A P: 305.271.0117
MIAMI, FL. 33183 F: 786.573.3063
www.MCYEngineering.com MCY.Engineering@AOL.net

SERIES 8000 HIGH PERFORMANCE UNITIZED CURTAIN WALL SYSTEM (L.M.I.)

NR ARCHITECTURAL PRODUCTS
4348 WESTROADS DRIVE
WEST PALM BEACH, FL 33407
P: (561) 844 - 1121 F: (561) 844 - 6131

DATE	02-26-12
SCALE	AS NOTED
DRAWN	S.L
PROJECT	0922

DRAWING NO.
AD10-19
D08

SHEET 16 of 46

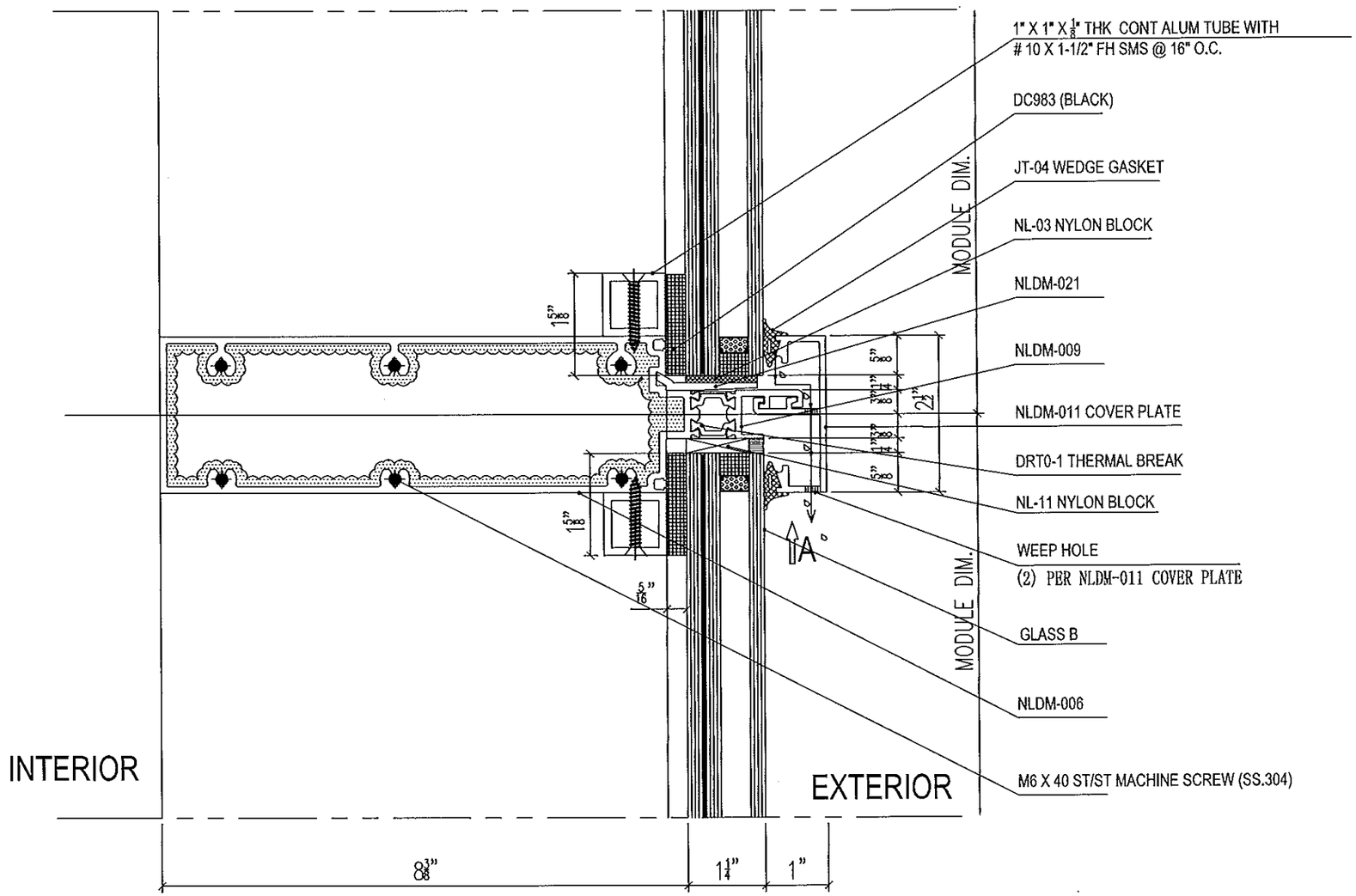

D09 / 17 DETAIL
TYP INTERM HORIZ

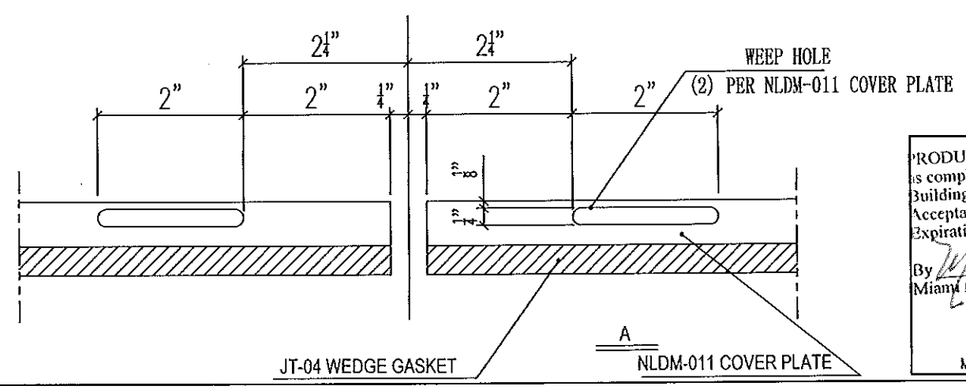

FEB 11 2013

PRODUCT REVISED
is complying with the Florida
Building Code
Acceptance No 12-0608.04
Expiration Date April 7, 2016
By Miami Dade Product Control

MIAMI DADE COUNTY

YIPING WANG, P.E.
FLORIDA REGISTRATION
PE #55983
C.A.N. 28677

REVISIONS

NO.	DATE	DESCRIPTION
1	2/28/12	UPDATE TO FBC2010
2	6/06/12	INCLUDING STRUC. GLAZING OPTION

MCY ENGINEERING, INC.
GLAZING CONSULTANTS
8501 SW 124 AVE. STE. 203A
MIAMI, FL 33183
P: 305.271.0117
F: 786.573.3063
www.MCYEngineering.com
MCY.Engineering@ATL.net

SERIES 8000 HIGH PERFORMANCE UNITIZED CURTAIN WALL SYSTEM (L.M.I.)

NR ARCHITECTURAL PRODUCTS
4348 WESTROADS DRIVE
WEST PALM BEACH, FL. 33407
P: (561) 844 - 1121 F: (561) 844 - 6131

DATE	02-28-12
SCALE	AS NOTED
DRAWN	S.L.
PROJECT	0922

DRAWING NO.
AD10-19
D09

SHEET 17 of 46

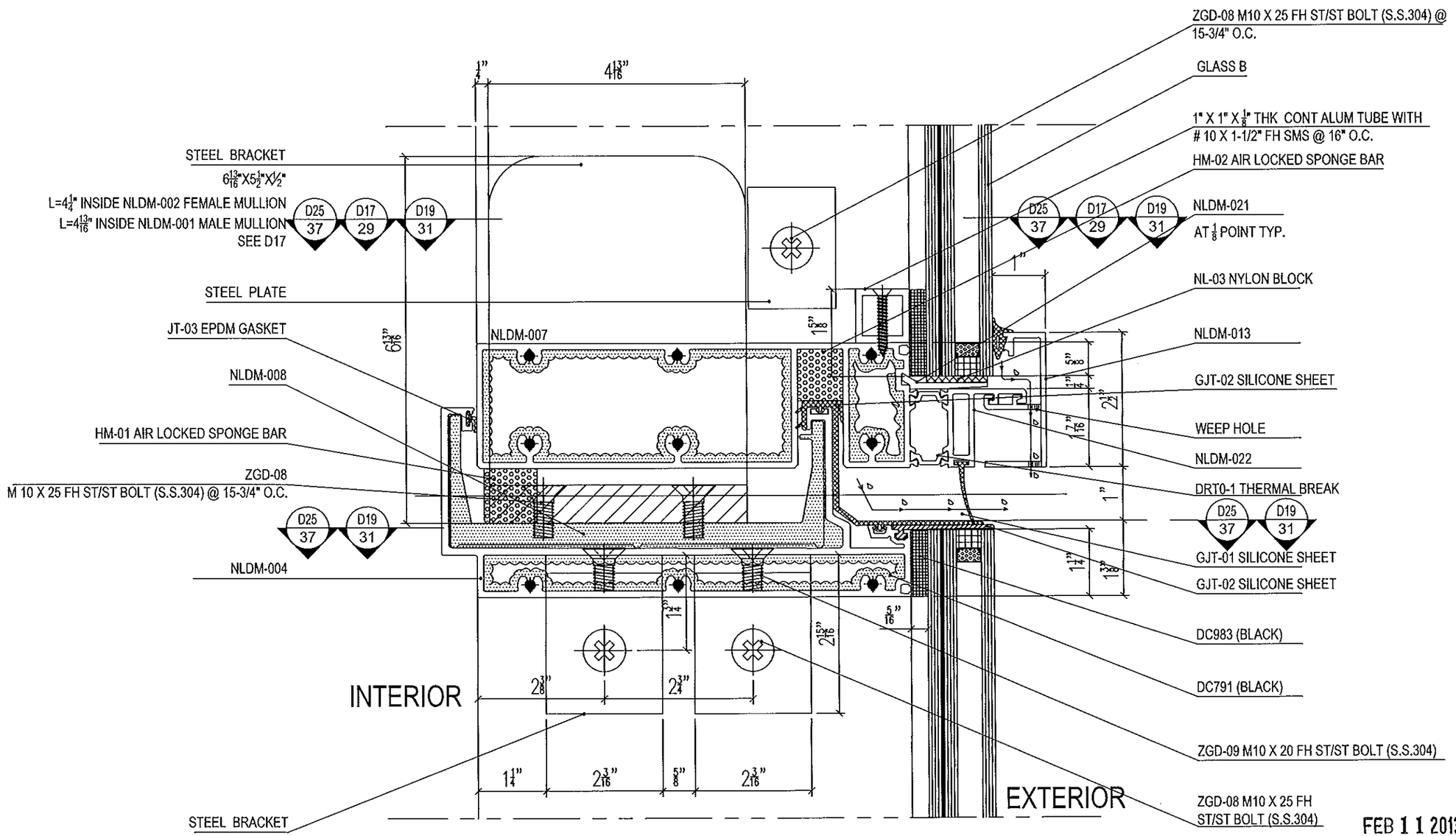

D10 / 18 DETAIL STACK JOINT

FEB 1 1 2013

PRODUCT REVISED
as complying with the Florida Building Code
Acceptance No 12-0602.04
Expiration Date April 9, 2016
By Manuel Sera
Miami Dade Product Control

MIAMI DADE COUNTY

YIPING WANG, P.E.
FLORIDA REGISTRATION
PE #55983
C.A.N. 28677

REVISIONS		
NO.	DATE	DESCRIPTION
1	2/28/12	UPDATE TO FBC2010
2	8/06/12	INCLUDING STRUC. GLAZING OPTION

MCY ENGINEERING, INC.
GLAZING CONSULTANTS
8501 SW 124 AVE. STE. 203A
MIAMI, FL 33183
P: 305.271.0117
F: 786.573.5063
www.MCYEngineering.com
MCY.Engineering@AIL.net

SERIES 8000 HIGH PERFORMANCE UNITIZED CURTAIN WALL SYSTEM (L.M.I.)

NR ARCHITECTURAL PRODUCTS
4348 WESTROADS DRIVE
WEST PALM BEACH, FL 33407
P: (561) 844 - 1121 F: (561) 844 - 6131

DATE	02-26-12
SCALE	AS NOTED
DRAWN	S.L.
PROJECT	0922

DRAWING NO.
AD10-19
D10

SHEET 18 of 46

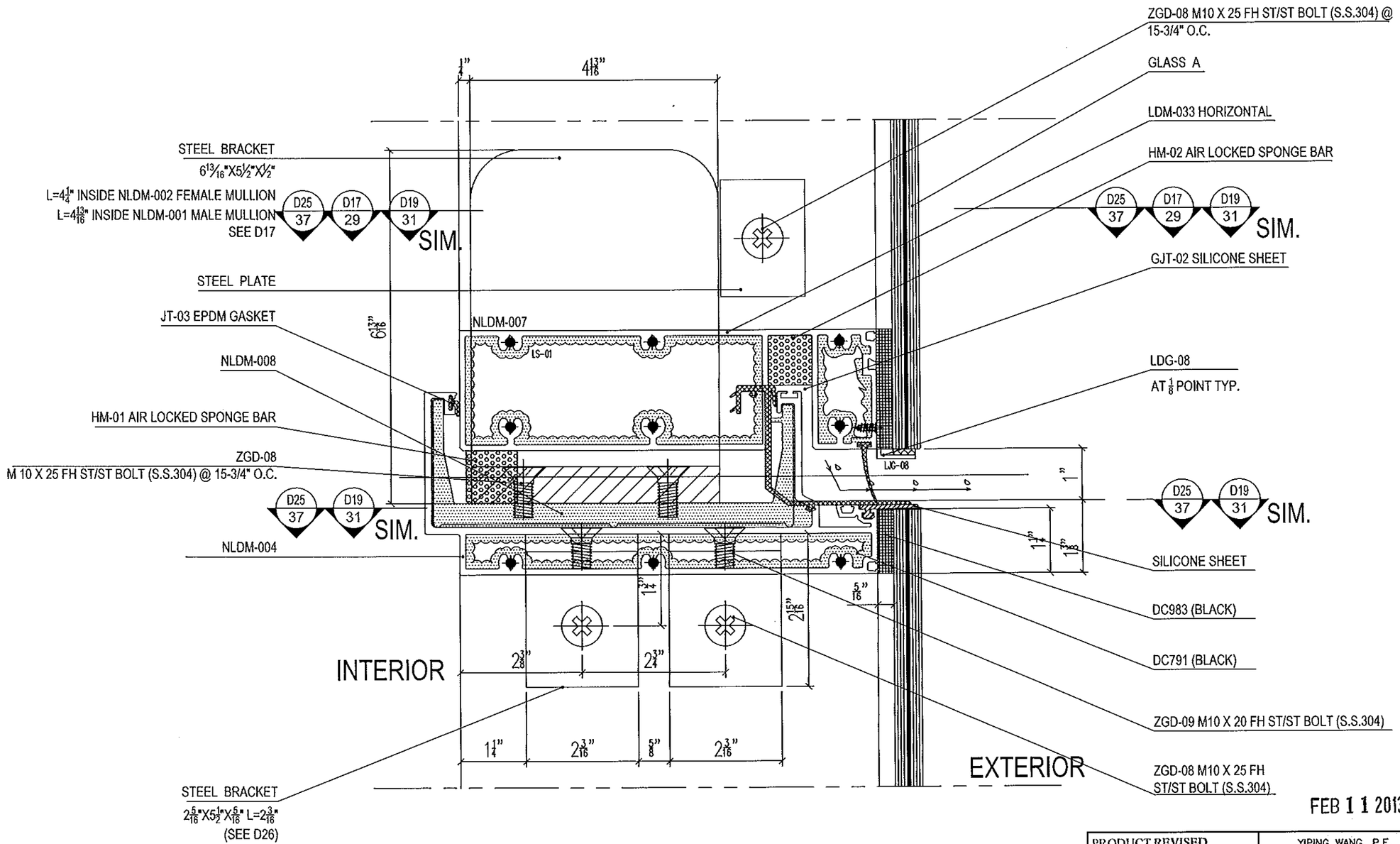

D10A / 18A DETAIL STACK JOINT

NEW SHEET

FEB 1 1 2013

PRODUCT REVISED
as complying with the Florida
Building Code
Acceptance No 12-0608.04
Expiration Date April 1, 2016
By Manuel Diaz
Miami Dade Product Control

MIAMI DADE COUNTY

YIPING WANG, P.E.
FLORIDA REGISTRATION
PE #55983
C.A.N. 28677

REVISIONS		
NO.	DATE	DESCRIPTION
1	12/28/12	UPDATE TO FBC2010
2	6/06/12	INCLUDING STRUC. GLAZING OPTION

MCY ENGINEERING, INC.
GLAZING CONSULTANTS
8501 SW 124 AVE. STE. 205A MIAMI, FL 33183
P: 305.271.0117
F: 786.573.5063
www.MCYEngineering.com
MCY.Engineering@AOL.net

SERIES 8000 HIGH PERFORMANCE UNITIZED CURTAIN WALL SYSTEM (L.M.I.)

NR ARCHITECTURAL PRODUCTS
4348 WESTROADS DRIVE
WEST PALM BEACH, FL 33407
P: (561) 844 - 1121 F: (561) 844 - 6131

DATE	02-26-12
SCALE	AS NOTED
DRAWN	S.L
PROJECT	0922

DRAWING NO.
AD10-19
D10A

SHEET 18A of 46

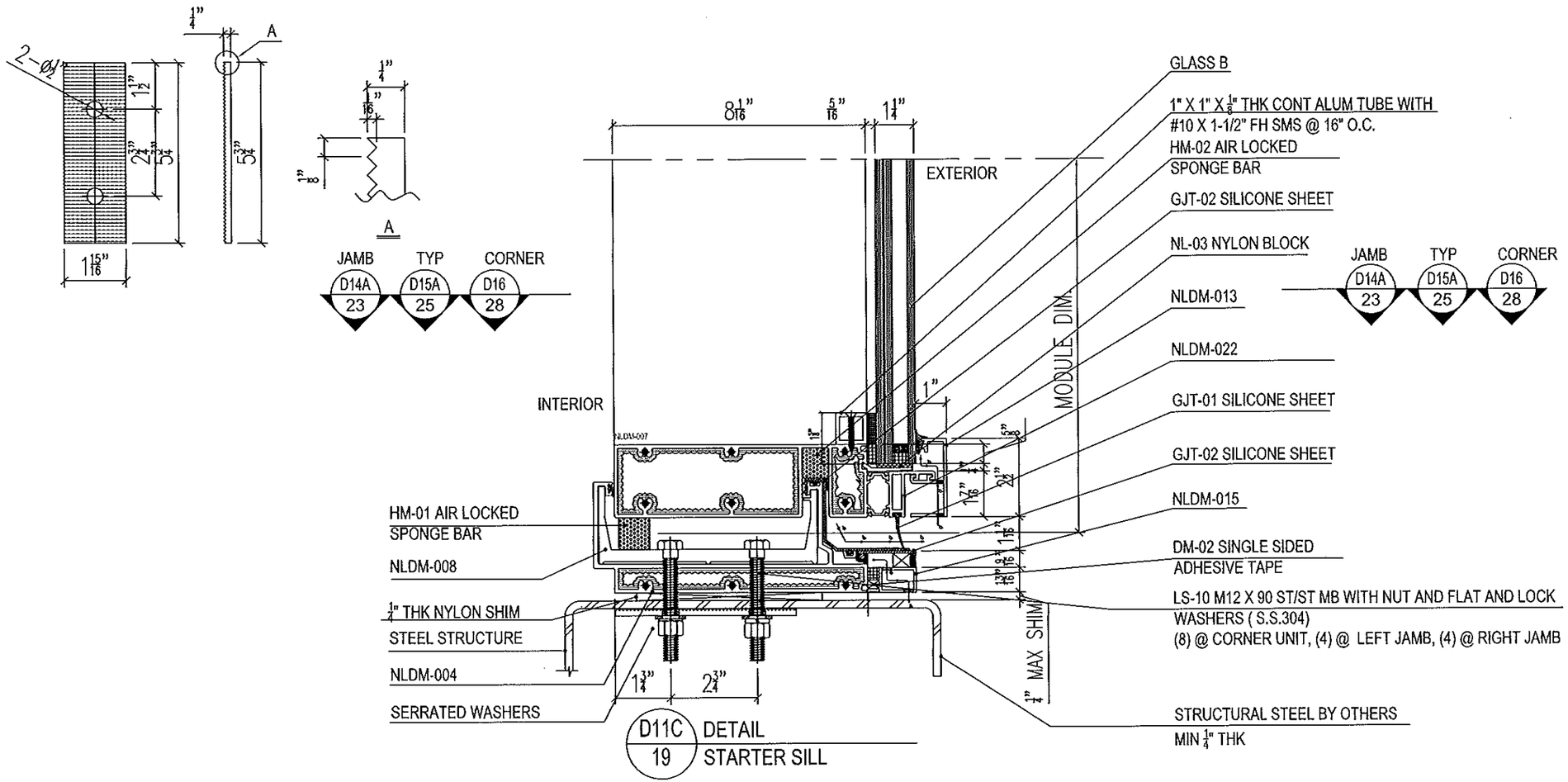

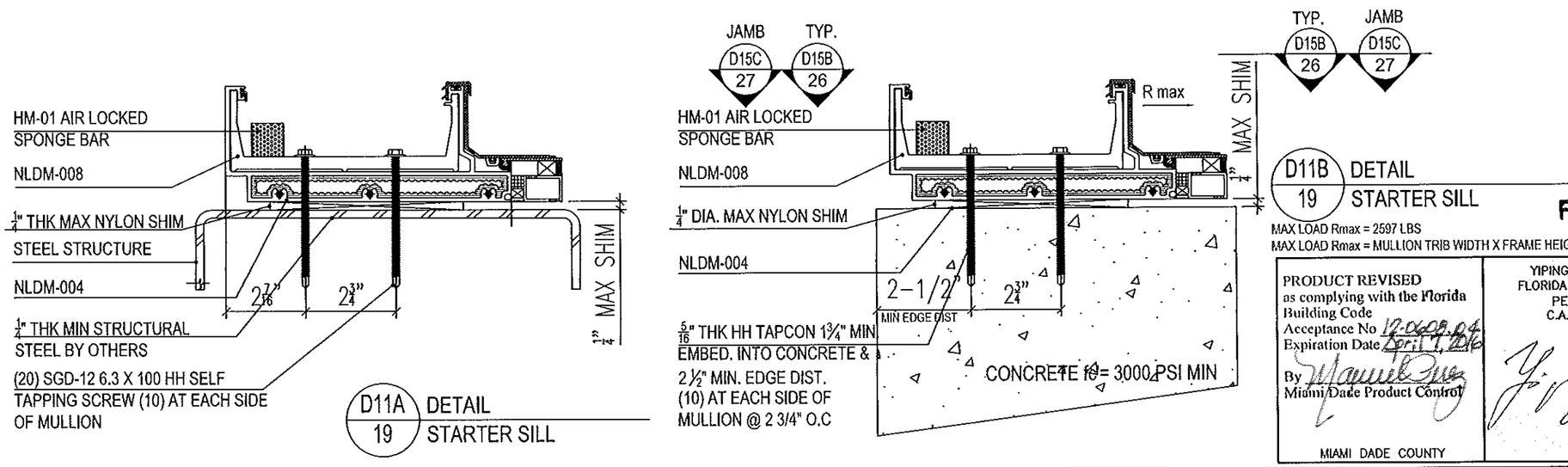

FEB 1 1 2013

PRODUCT REVISED
as complying with the Florida
Building Code
Acceptance No 12-0609.04
Expiration Date April 1, 2016
By Miami Dade Product Control

MIAMI DADE COUNTY

YIPING WANG, P.E.
FLORIDA REGISTRATION
PE #55983
C.A.N. 28677

REVISIONS		
NO.	DATE	DESCRIPTION
1	2/28/12	UPDATE TO FBC2010
2	6/06/12	INCLUDING STRUC. GLAZING OPTION

MCY ENGINEERING, INC.
GLAZING CONSULTANTS
8501 SW 124 AVE. STE. 203A
MIAMI, FL. 33183
P: 305.271.0117
F: 786.573.5063
www.MCYEngineering.com
MCY.Engineering@AOL.net

SERIES 8000 HIGH PERFORMANCE UNITIZED CURTAIN WALL SYSTEM (L.M.I.)

NR ARCHITECTURAL PRODUCTS
4348 WESTROADS DRIVE
WEST PALM BEACH, FL. 33407
P: (561) 844 - 1121 F: (561) 844 - 6131

DATE	02-26-12
SCALE	AS NOTED
DRAWN	S.L.
PROJECT	0922

DRAWING NO.
AD10-19
D11

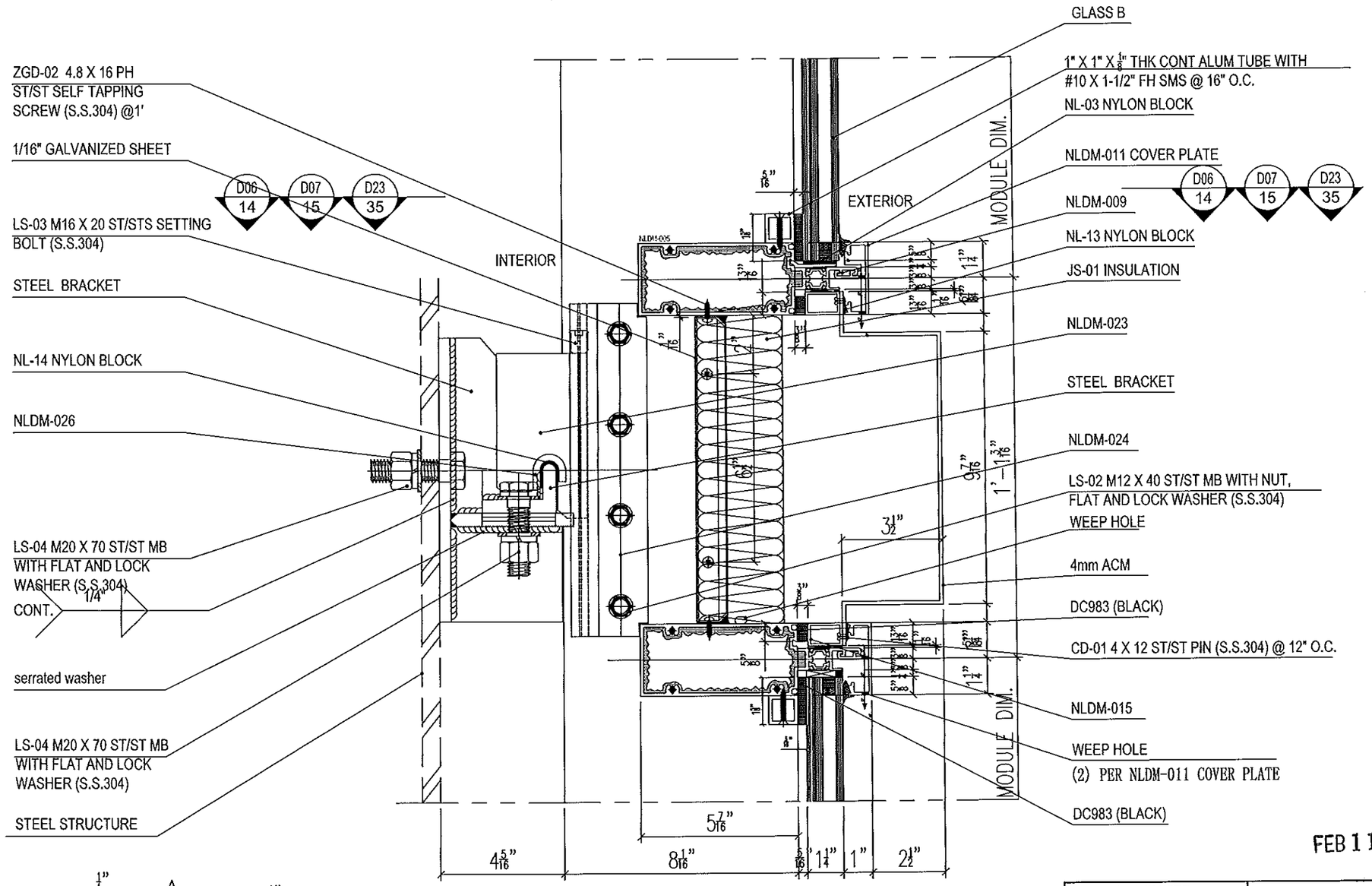

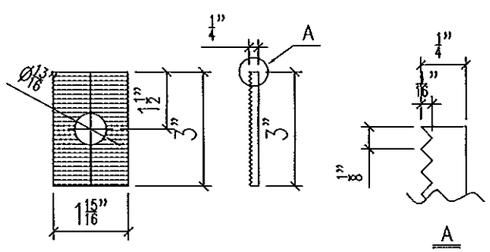

D12A / 20 DETAIL
TYP ALUM PANEL AT SPANDREL AREA

FEB 1 1 2013

PRODUCT REVISED
as complying with the Florida Building Code
Acceptance No 12-0409.04
Expiration Date Apr. 1, 2016
By Manuel Sera
Miami-Dade Product Control

MIAMI DADE COUNTY

YIPING WANG, P.E.
FLORIDA REGISTRATION
PE #55983
C.A.N. 28677

REVISIONS		
NO.	DATE	DESCRIPTION
1	2/26/12	UPDATE TO FBC2010
2	8/06/12	INCLUDING STRUC. GLAZING OPTION

MCY ENGINEERING, INC.
GLAZING CONSULTANTS
8501 SW 124 AVE. STE. 205A
MIAMI, FL 33183
P: 305.271.0117
F: 786.573.5063
www.MCYEngineering.com
MCY.Engineering@ATL.net

SERIES 8000 HIGH PERFORMANCE UNITIZED CURTAIN WALL SYSTEM (L.M.I.)

NR ARCHITECTURAL PRODUCTS
4348 WESTROADS DRIVE
WEST PALM BEACH, FL 33407
P: (561) 844 - 1121 F: (561) 844 - 6131

DATE	02-26-12
SCALE	AS NOTED
DRAWN	S.L.
PROJECT	0922

DRAWING NO.
AD10-19
D12A

SHEET 20 of 46

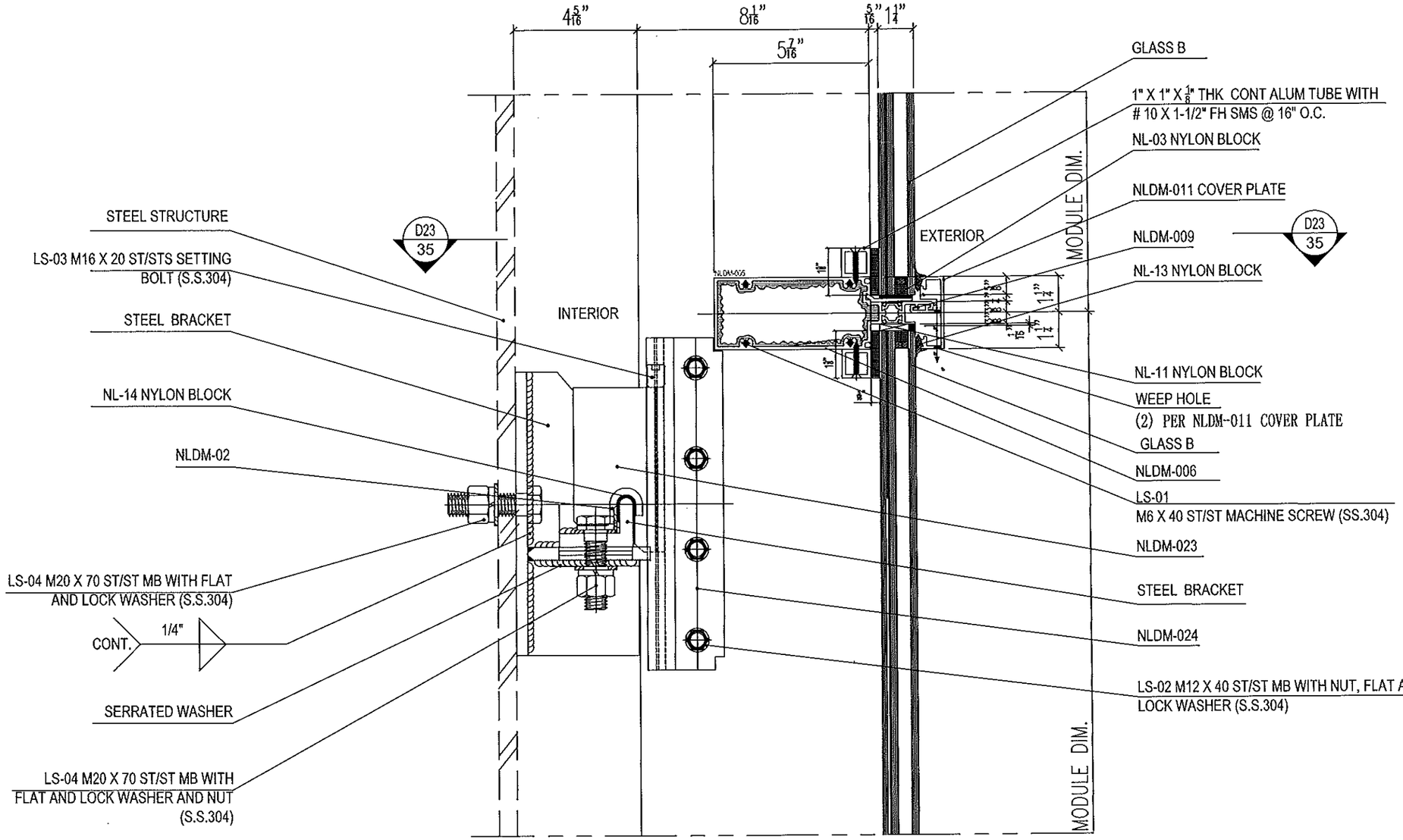

D12B / 21 DETAIL
INTERM HORIZ W/ ANCHOR

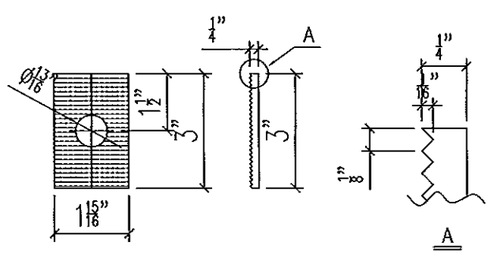

FEB 1 1 2013

PRODUCT REVISED
as complying with the Florida
Building Code
Acceptance No 12-0609.04
Expiration Date April 1, 2016
By Manuel Diaz
Miami Dade Product Control

MIAMI DADE COUNTY

YIPING WANG, P.E.
FLORIDA REGISTRATION
PE #55983
C.A.N. 28677

REVISIONS		
NO.	DATE	DESCRIPTION
1	2/28/12	UPDATE TO FBC2010
2	6/06/12	INCLUDING STRUC. GLAZING OPTION

MCY ENGINEERING, INC.
GLAZING CONSULTANTS
8501 SW 124 AVE. STE. 203A
MIAMI, FL. 33183
P: 305.271.0117
F: 786.573.5063
www.MCYEngineering.com
MCY.Engineering@AIL.net

SERIES 8000 HIGH PERFORMANCE UNITIZED CURTAIN WALL SYSTEM (L.M.I.)

NR ARCHITECTURAL PRODUCTS
4348 WESTROADS DRIVE
WEST PALM BEACH, FL. 33407
P: (561) 844 - 1121 F: (561) 844 - 6131

DATE	02-28-12
SCALE	AS NOTED
DRAWN	S.I.
PROJECT	0922

DRAWING NO.
AD10-19
D12B

SHEET 21 of 46

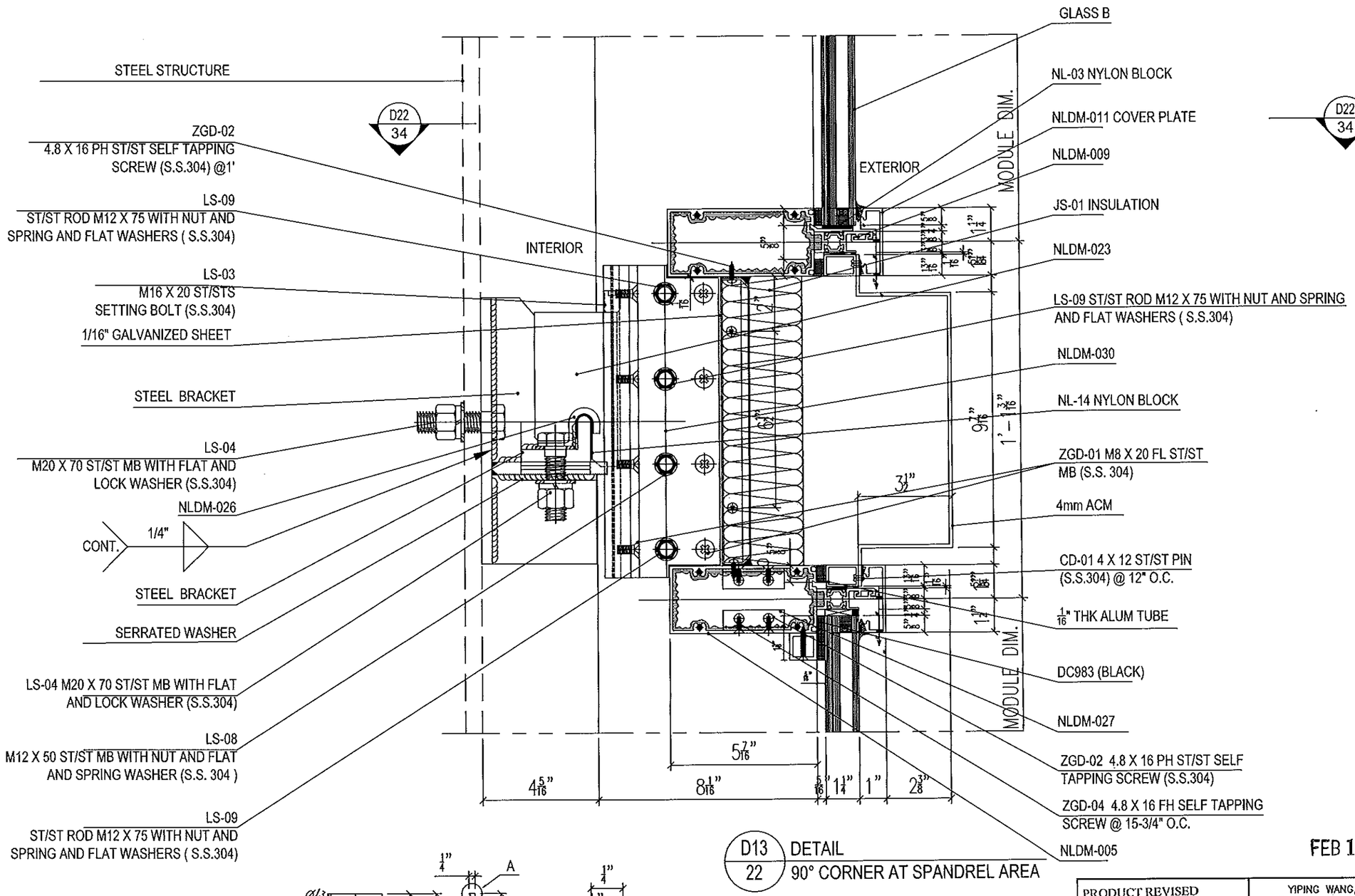

D13 / 22 DETAIL
90° CORNER AT SPANDREL AREA

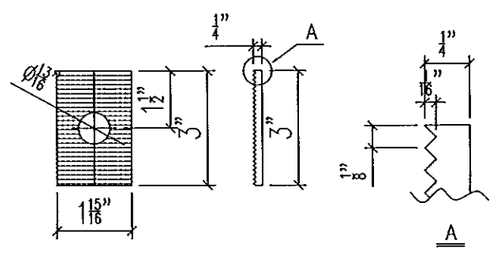

FEB 1 1 2013

PRODUCT REVISED
as complying with the Florida Building Code
Acceptance No 12-0608.04
Expiration Date April 7, 2016
By Manuel Perez
Miami Dade Product Control

MIAMI DADE COUNTY

YIPING WANG, P.E.
FLORIDA REGISTRATION
PE #55983
C.A.N. 28677

REVISIONS

NO.	DATE	DESCRIPTION
1	2/26/12	UPDATE TO FBC2010
2	6/06/12	INCLUDING STRUC. GLAZING OPTION

MCY ENGINEERING, INC.
GLAZING CONSULTANTS
8501 SW 124 AVE. STE. 205A
MIAMI, FL 33183
P: 305.271.0117
F: 786.573.5063
www.MCYEngineering.com
MCY.Engineering@ALL.net

SERIES 8000 HIGH PERFORMANCE UNITIZED CURTAIN WALL SYSTEM (L.M.I.)

NR ARCHITECTURAL PRODUCTS
4348 WESTROADS DRIVE
WEST PALM BEACH, FL. 33407
P: (561) 844 - 1121 F: (561) 844 - 6131

DATE	02-26-12
SCALE	AS NOTED
DRAWN	S.L.
PROJECT	0922

DRAWING NO.
AD10-19
D13

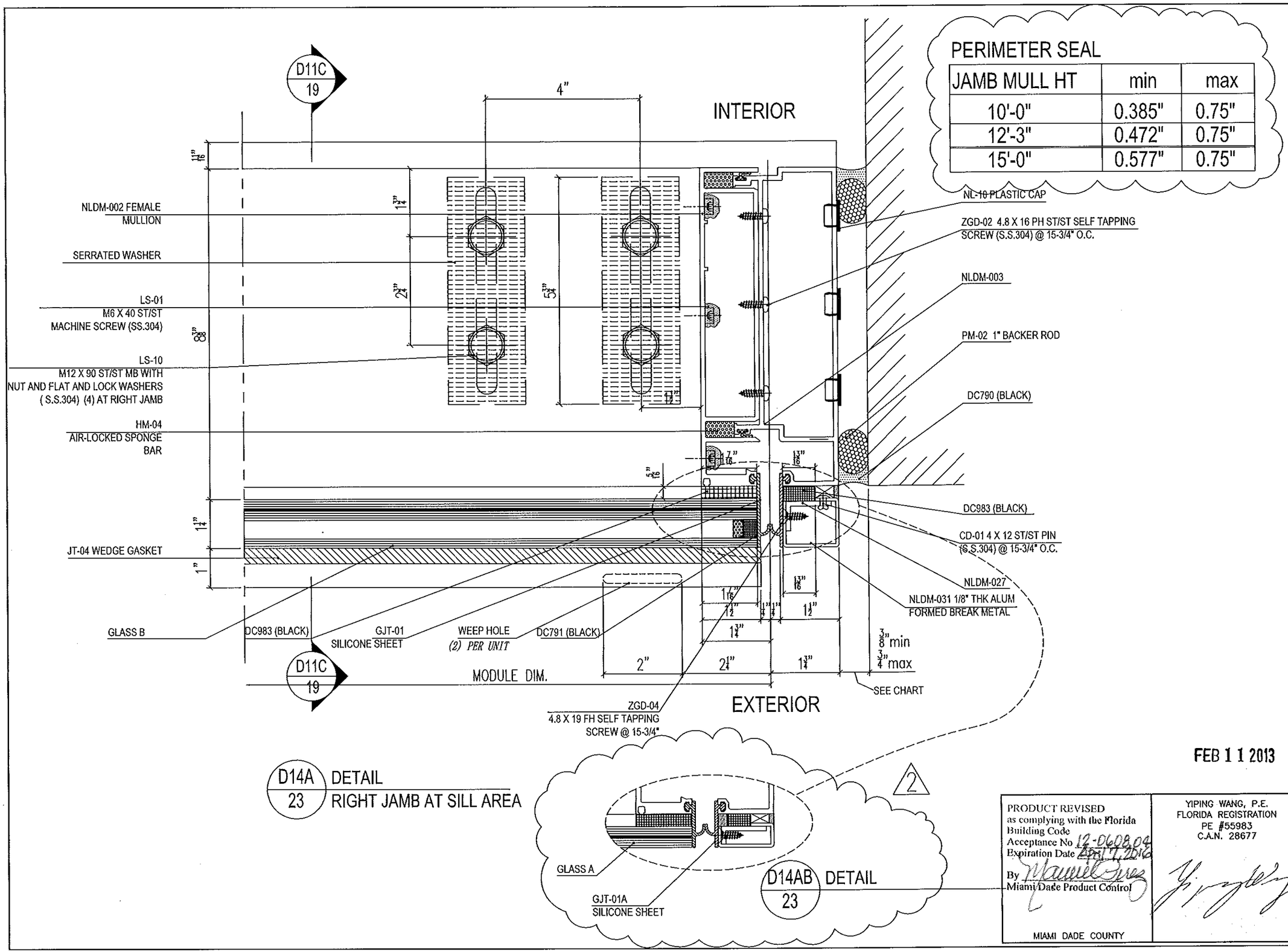

PERIMETER SEAL

JAMB MULL HT	min	max
10'-0"	0.385"	0.75"
12'-3"	0.472"	0.75"
15'-0"	0.577"	0.75"

FEB 1 1 2013

PRODUCT REVISED
as complying with the Florida
Building Code
Acceptance No 12-0608.04
Expiration Date April 7, 2016
By Manuel Inez
Miami Dade Product Control

MIAMI DADE COUNTY

YIPING WANG, P.E.
FLORIDA REGISTRATION
PE #55983
C.A.N. 28677

REVISIONS			
NO.	DATE	DESCRIPTION	
1	2/26/12	UPDATE TO FBC2010	
2	6/06/12	INCLUDING STRUC. GLAZING OPTION	

MCY ENGINEERING, INC.
GLAZING CONSULTANTS
8501 SW 124 AVE. STE. 203A
MIAMI, FL. 33183
P: 305.271.0117
F: 786.573.5063
www.MCYEngineering.com
MCY.Engineering@AIL.net

SERIES 8000 HIGH PERFORMANCE UNITIZED CURTAIN WALL SYSTEM (L.M.I.)

NR ARCHITECTURAL PRODUCTS
4348 WESTROADS DRIVE
WEST PALM BEACH, FL. 33407
P: (561) 844 - 1121 F: (561) 844 - 6131

DATE	02-26-12
SCALE	AS NOTED
DRAWN	S.L
PROJECT	0922

DRAWING NO.
AD10–19
D14–A

SHEET 23 of 46

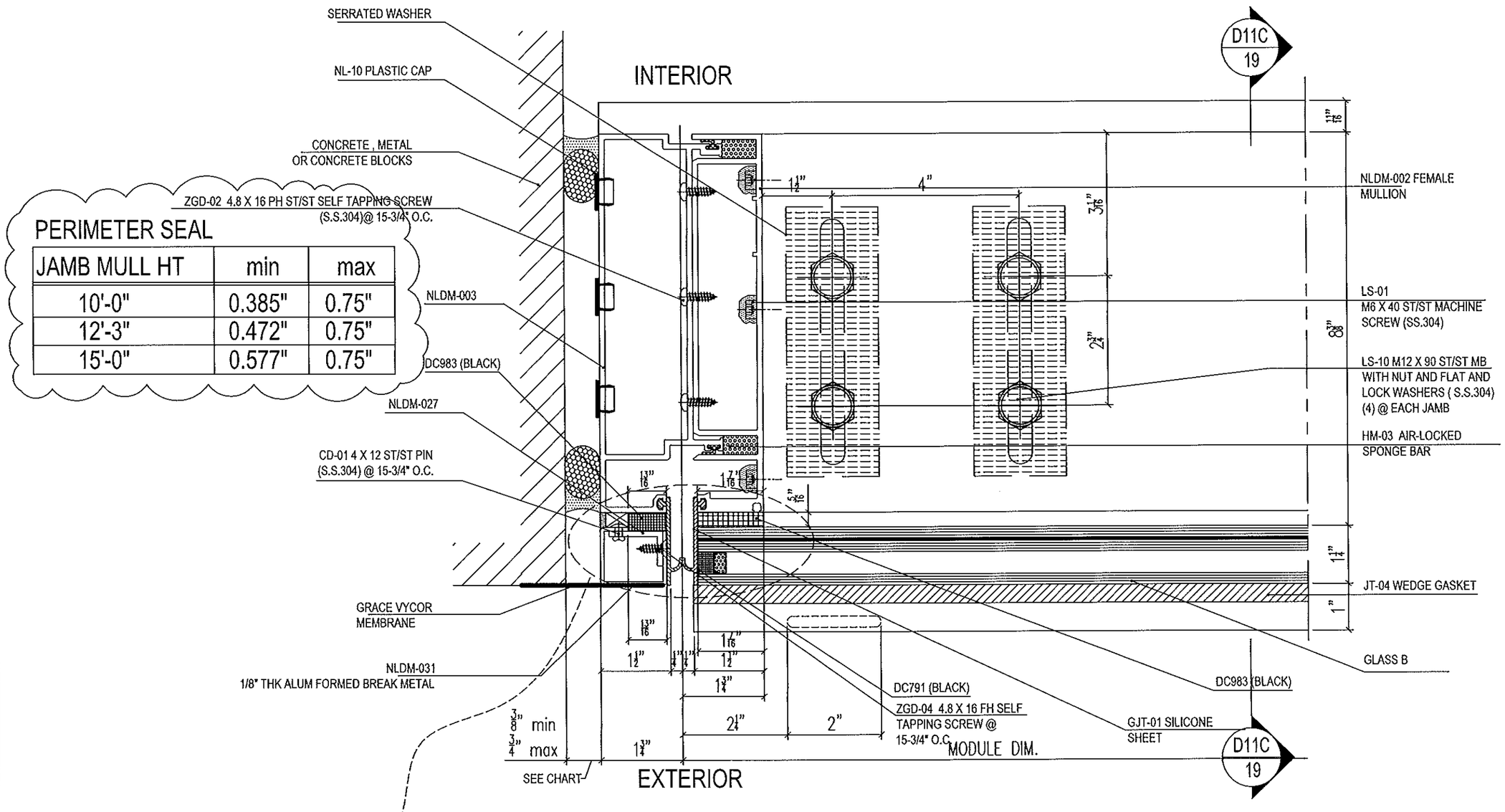

PERIMETER SEAL

JAMB MULL HT	min	max
10'-0"	0.385"	0.75"
12'-3"	0.472"	0.75"
15'-0"	0.577"	0.75"

D14B / 24 DETAIL
LEFT JAMB AT SILL AREA

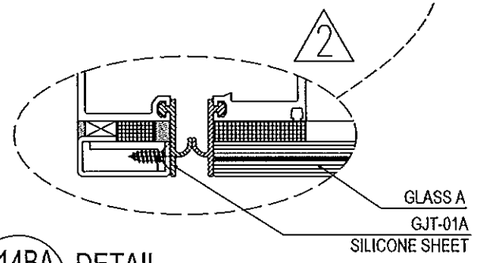

D14BA / 24 DETAIL
LEFT JAMB AT SILL AREA

FEB 1 1 2013

PRODUCT REVISED
as complying with the Florida
Building Code
Acceptance No 12-0608.04
Expiration Date April 7, 2016
By [signature]
Miami Dade Product Control

MIAMI DADE COUNTY

YIPING WANG, P.E.
FLORIDA REGISTRATION
PE #55983
C.A.N. 28677

[signature]

REVISIONS

NO.	DATE	DESCRIPTION
1	2/26/12	UPDATE TO FBC2010
2	6/06/12	INCLUDING STRUC. GLAZING OPTION

MCY ENGINEERING, INC.
GLAZING CONSULTANTS
8501 SW 124 AVE. STE. 205A
MIAMI, FL. 33183
P: 305.271.0117
F: 786.573.5063
www.MCYEngineering.com
MCY.Engineering@ATL.net

SERIES 8000 HIGH PERFORMANCE UNITIZED CURTAIN WALL SYSTEM (L.M.I.)

NR ARCHITECTURAL PRODUCTS
4348 WESTROADS DRIVE
WEST PALM BEACH, FL. 33407
P: (561) 844 - 1121 F: (561) 844 - 6131

DATE	02-26-12
SCALE	AS NOTED
DRAWN	S.L.
PROJECT	0922

DRAWING NO.
AD10-19
D14-B

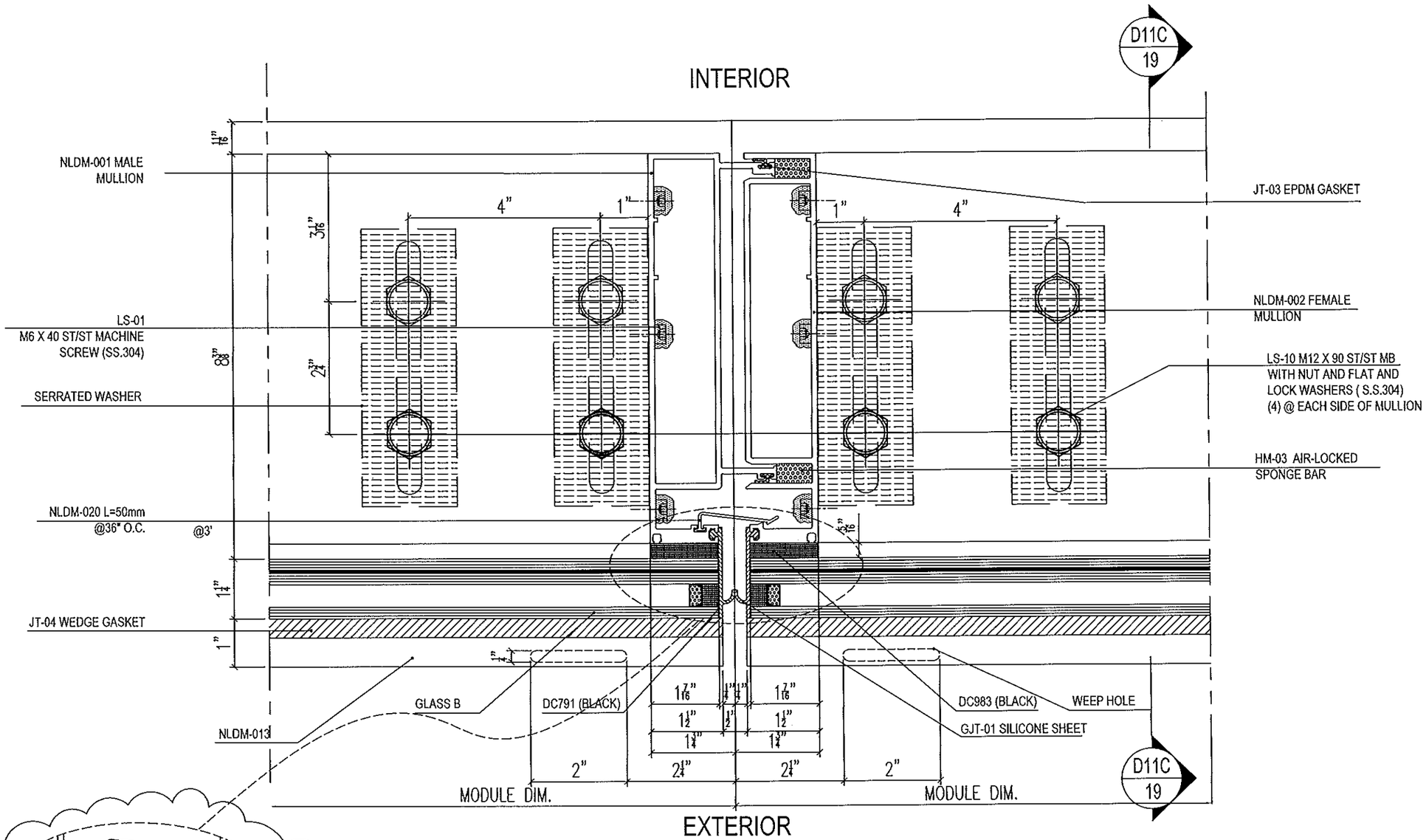

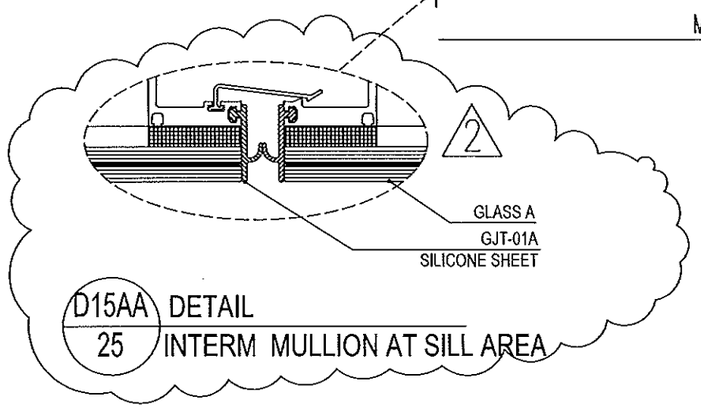

D15AA / 25 DETAIL
INTERM MULLION AT SILL AREA

D15A / 25 DETAIL
INTERM MULLION AT SILL AREA

FEB 1 1 2013

PRODUCT REVISED
as complying with the Florida Building Code
Acceptance No 12-0608.04
Expiration Date April 7, 2016
By Manuel Sosa
Miami Dade Product Control

MIAMI DADE COUNTY

YIPING WANG, P.E.
FLORIDA REGISTRATION
PE #55983
C.A.N. 28677

REVISIONS

NO.	DATE	DESCRIPTION
1	2/26/12	UPDATE TO FBC2010
2	6/06/12	INCLUDING STRUC. GLAZING OPTION

MCY ENGINEERING, INC.
GLAZING CONSULTANTS
8501 SW 124 AVE. STE. 205A
MIAMI, FL. 33183
P: 305.271.0117
F: 786.573.5063
www.MCYEngineering.com
MCY.Engineering@AOL.net

SERIES 8000 HIGH PERFORMANCE UNITIZED CURTAIN WALL SYSTEM (L.M.I.)

NR ARCHITECTURAL PRODUCTS
4348 WESTROADS DRIVE
WEST PALM BEACH, FL. 33407
P: (561) 844 - 1121 F: (561) 844 - 6131

DATE	02-26-12
SCALE	AS NOTED
DRAWN	S.I.
PROJECT	0922

DRAWING NO.
AD10-19
D15-A

SHEET 25 of 46

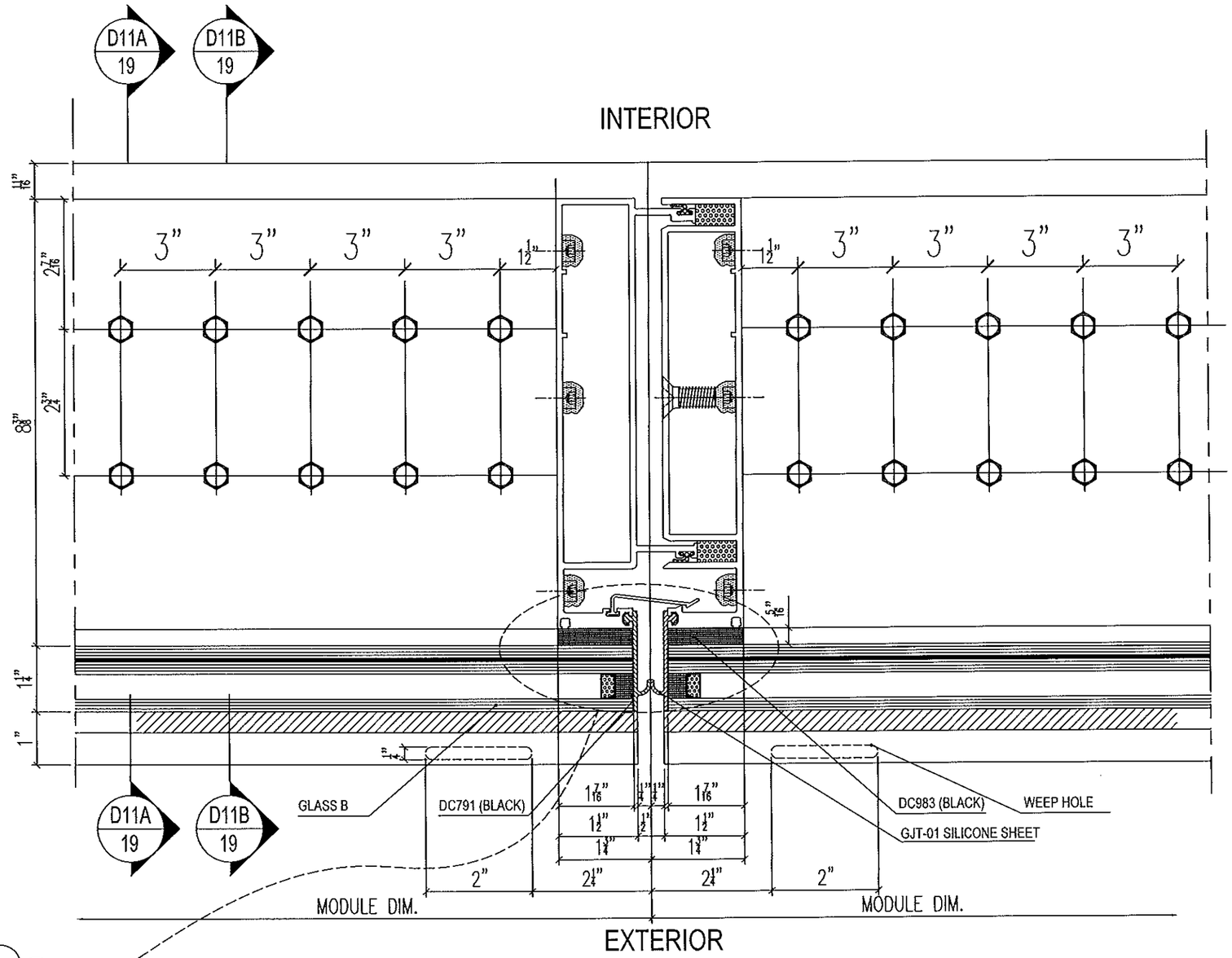

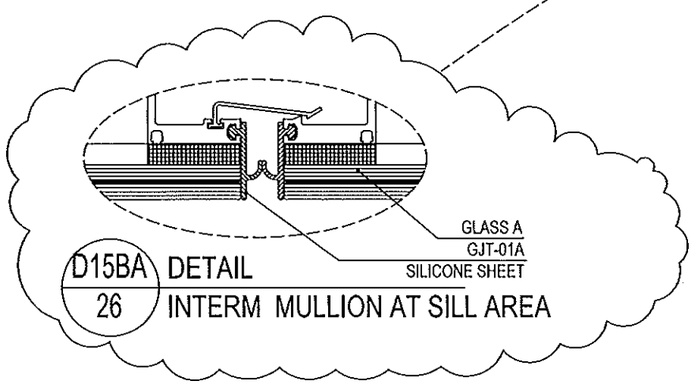

D15BA / 26 DETAIL
INTERM MULLION AT SILL AREA

D15B / 26 DETAIL
INTERM MULLION AT SILL AREA

FEB 1 1 2013

PRODUCT REVISED
as complying with the Florida
Building Code
Acceptance No 12-0608.04
Expiration Date April 7, 2016
By Manuel Perez
Miami Dade Product Control

MIAMI DADE COUNTY

YIPING WANG, P.E.
FLORIDA REGISTRATION
PE #55983
C.A.N. 28677

REVISIONS		
NO.	DATE	DESCRIPTION
1	2/26/12	UPDATE TO FBC2010
2	6/06/12	INCLUDING STRUC. GLAZING OPTION

MCY ENGINEERING, INC.
GLAZING CONSULTANTS
8501 SW 124 AVE. STE. 205A
MIAMI, FL. 33183
www.MCYEngineering.com
P: 305.271.0117
F: 786.573.5063
MCY.Engineering@AOL.net

SERIES 8000 HIGH PERFORMANCE UNITIZED CURTAIN WALL SYSTEM (L.M.I.)

NR ARCHITECTURAL PRODUCTS
4348 WESTROADS DRIVE
WEST PALM BEACH, FL. 33407
P: (561) 844 - 1121 F: (561) 844 - 6131

DATE	02-26-12
SCALE	AS NOTED
DRAWN	S.I.
PROJECT	0922

DRAWING NO.
AD10--19
D15-B

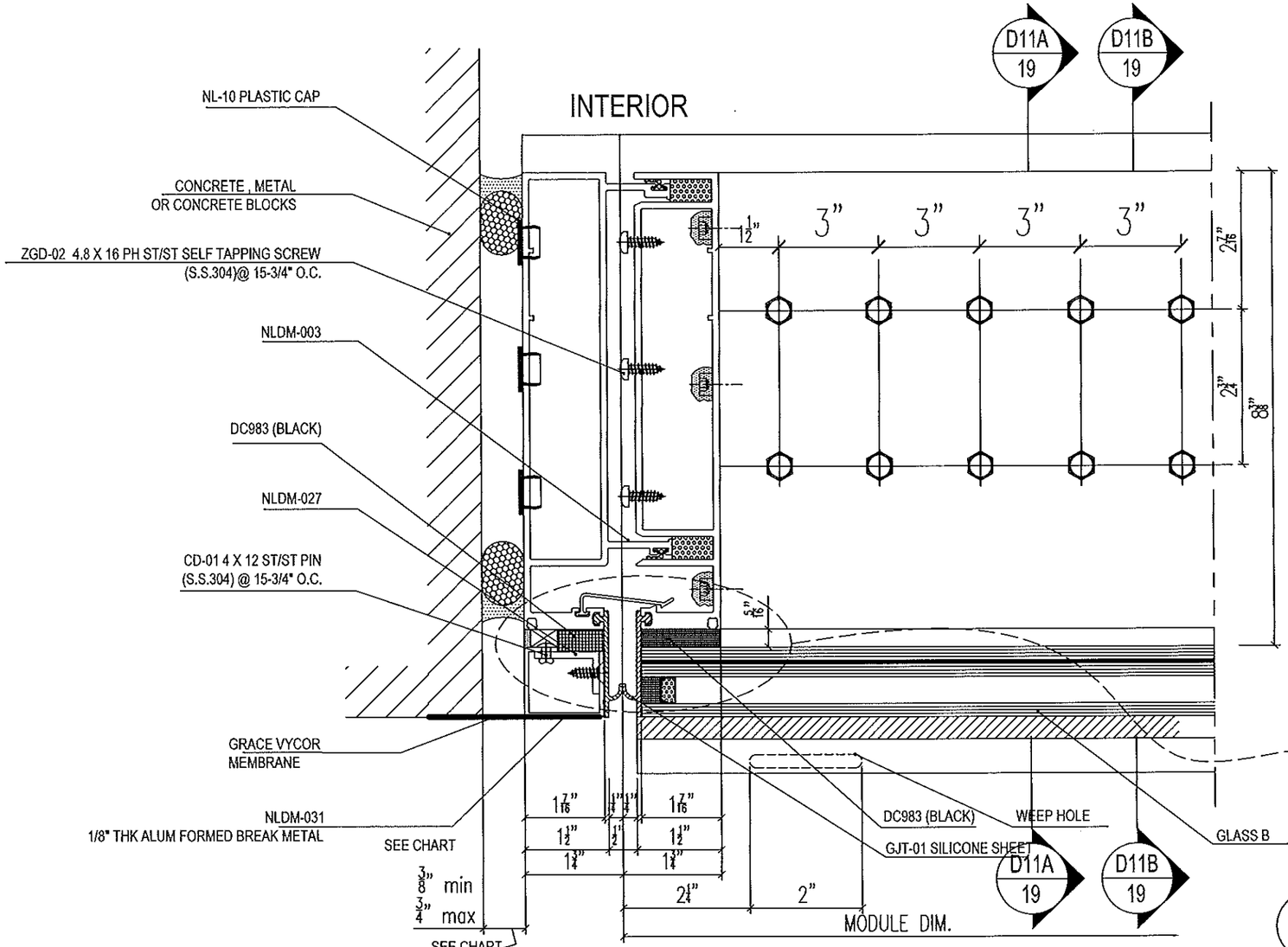

D15C / 27 DETAIL
LEFT JAMB AT SILL AREA

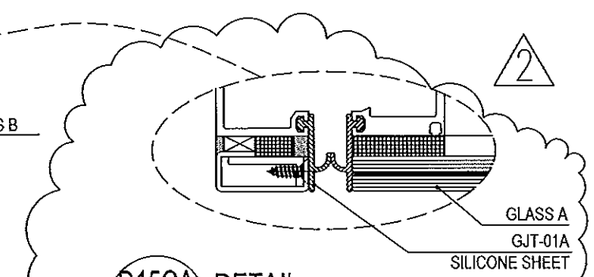

D15CA / 27 DETAIL
LEFT JAMB AT SILL AREA

PERIMETER SEAL

JAMB MULL HT	min	max
10'-0"	0.385"	0.75"
12'-3"	0.472"	0.75"
15'-0"	0.577"	0.75"

FEB 11 2013

PRODUCT REVISED
as complying with the Florida
Building Code
Acceptance No 12-0608.04
Expiration Date April 7, 2016
By Manuel Perez
Miami Dade Product Control

MIAMI DADE COUNTY

YIPING WANG, P.E.
FLORIDA REGISTRATION
PE #55983
C.A.N. 28677

REVISIONS		
NO.	DATE	DESCRIPTION
1	2/26/12	UPDATE TO FBC2010
2	6/06/12	INCLUDING STRUC. GLAZING OPTION

MCY ENGINEERING, INC.
GLAZING CONSULTANTS
8501 SW 124 AVE. STE. 205A
MIAMI, FL. 33183
P: 305.271.0117
F: 786.573.5063
www.MCYEngineering.com
MCY.Engineering@ATT.net

SERIES 8000 HIGH PERFORMANCE UNITIZED CURTAIN WALL SYSTEM (L.M.I.)

NR ARCHITECTURAL PRODUCTS
4348 WESTROADS DRIVE
WEST PALM BEACH, FL. 33407
P: (561) 844 - 1121 F: (561) 844 - 6131

DATE	02-26-12
SCALE	AS NOTED
DRAWN	S.L
PROJECT	0922

DRAWING NO.
AD10-19
D15-C

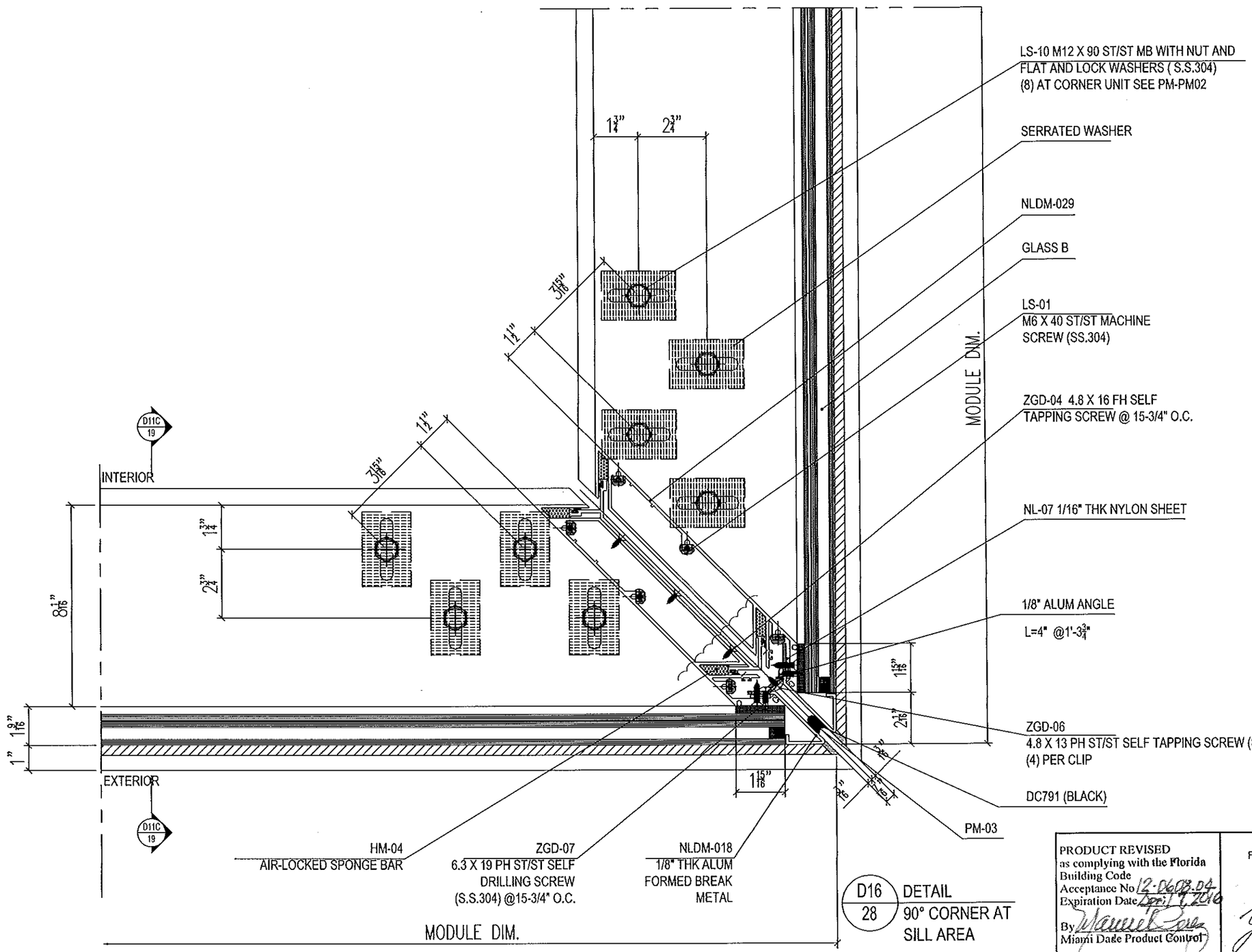

D16 / 28 DETAIL
90° CORNER AT SILL AREA

FEB 1 1 2013

PRODUCT REVISED
as complying with the Florida Building Code
Acceptance No 12-0608.04
Expiration Date April 6, 2016
By Manuel Rosa
Miami Dade Product Control

MIAMI DADE COUNTY

YIPING WANG, P.E.
FLORIDA REGISTRATION
PE #55983
C.A.N. 28677

REVISIONS

NO.	DATE	DESCRIPTION
1	2/28/12	UPDATE TO FBC2010
2	8/06/12	INCLUDING STRUC. GLAZING OPTION

MCY ENGINEERING, INC.
GLAZING CONSULTANTS
9501 SW 124 AVE. STE. 305A P: 305.271.0117
MIAMI, FL 33183 F: 786.573.5063
www.MCYEngineering.com MCY.Engineering@AIL.net

SERIES 8000 HIGH PERFORMANCE UNITIZED CURTAIN WALL SYSTEM (L.M.I.)

NR ARCHITECTURAL PRODUCTS
4348 WESTROADS DRIVE
WEST PALM BEACH, FL 33407
P: (561) 844 - 1121 F: (561) 844 - 6131

DATE	02-28-12
SCALE	AS NOTED
DRAWN	S.L.
PROJECT	0922

DRAWING NO.
AD10-19
D16

SHEET 28 of 46

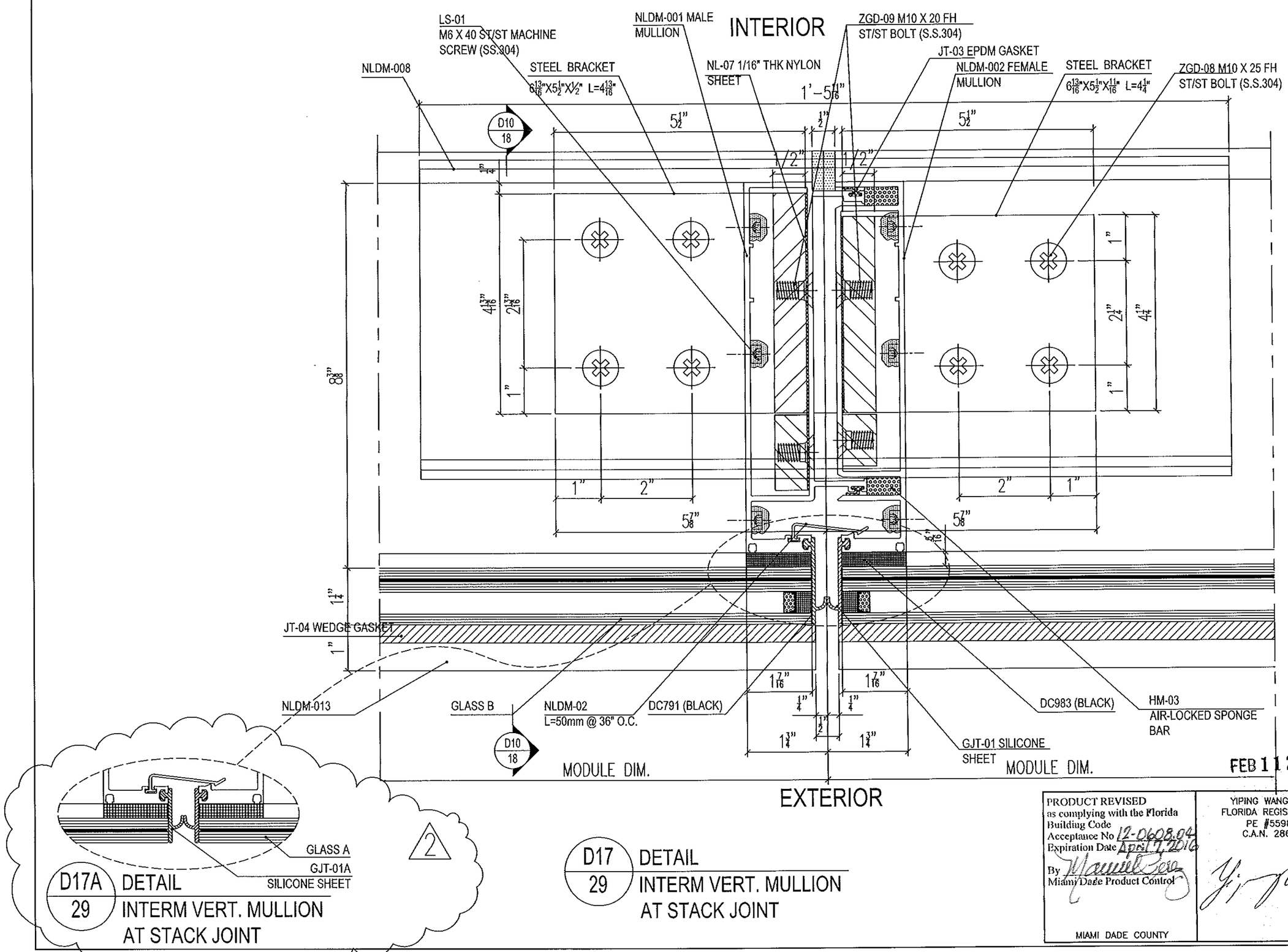

FEB 11 2013

PRODUCT REVISED
as complying with the Florida Building Code
Acceptance No 12-0608.04
Expiration Date April 9, 2016
By Manuel Seoane
Miami Dade Product Control

MIAMI DADE COUNTY

YIPING WANG, P.E.
FLORIDA REGISTRATION
PE #55983
C.A.N. 28677

REVISIONS		
NO.	DATE	DESCRIPTION
1	2/28/12	UPDATE TO FBC2010 INCLUDING STRUC. GLAZING OPTION
2	6/06/12	

MCY ENGINEERING, INC.
GLAZING CONSULTANTS
8501 SW 124 AVE. STE. 205A
MIAMI, FL. 33183
P: 305.271.0117
F: 786.573.5063
www.MCYEngineering.com
MCY.Engineering@AOL.net

SERIES 8000 HIGH PERFORMANCE UNITIZED CURTAIN WALL SYSTEM (L.M.I.)

NR ARCHITECTURAL PRODUCTS
4348 WESTROADS DRIVE
WEST PALM BEACH, FL. 33407
P: (561) 844 - 1121 F: (561) 844 - 6131

DATE	02-28-12
SCALE	AS NOTED
DRAWN	S.L
PROJECT	0922

DRAWING NO.
AD10-19
D17

SHEET 29 of 46

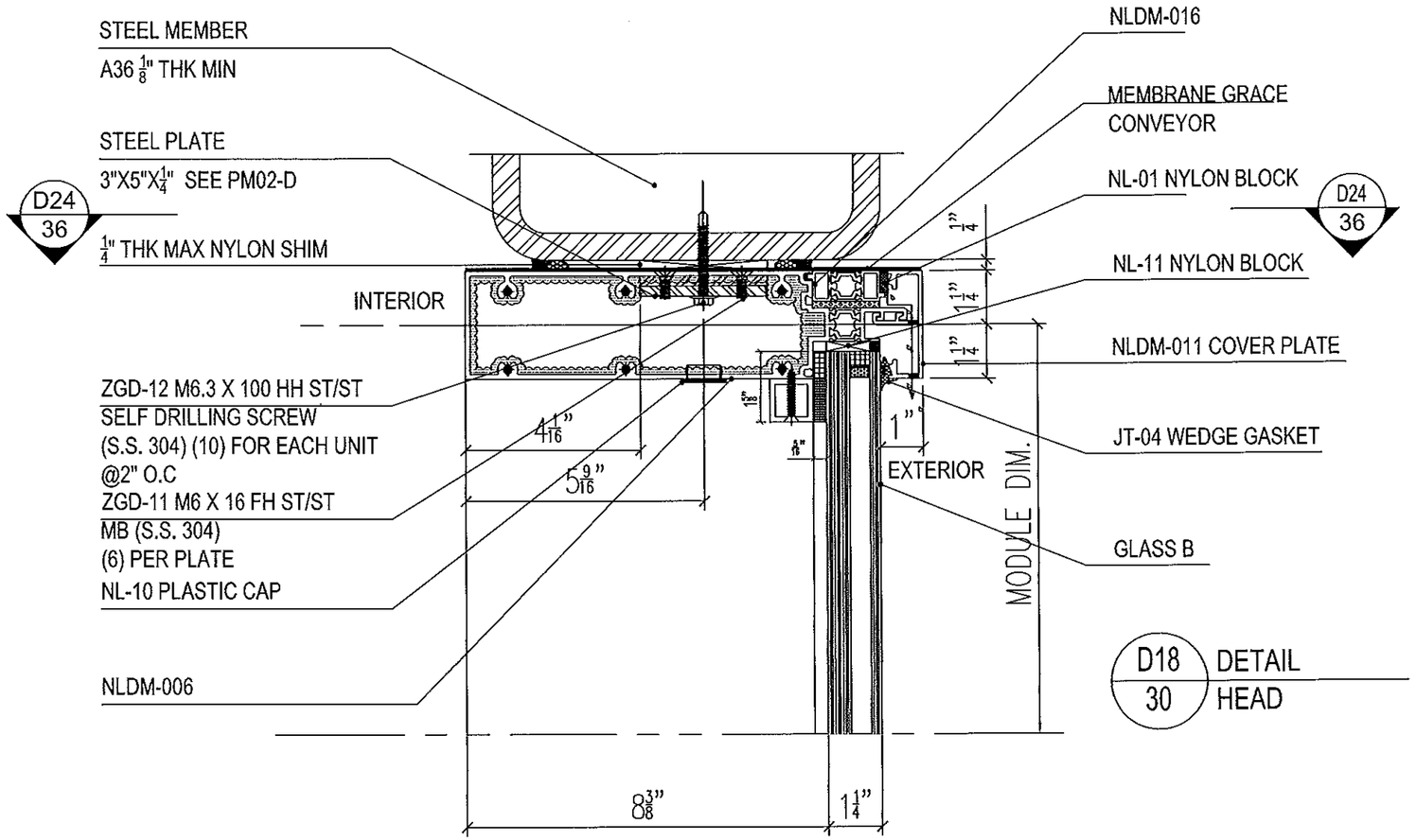

D18 / 30 DETAIL HEAD

OPTION A

CONCRETE SUBSTRATE

CONCRETE fc'= 3000psi min

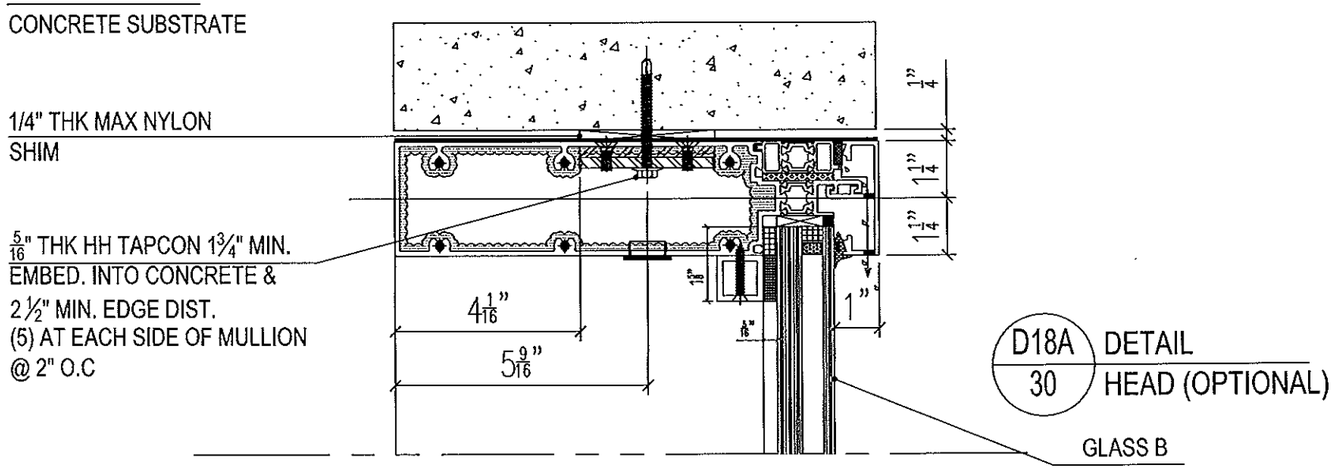

D18A / 30 DETAIL HEAD (OPTIONAL)

FEB 1 1 2013

PRODUCT REVISED
as complying with the Florida
Building Code
Acceptance No 12-0608.04
Expiration Date April 1, 2016
By Manuel Cruz
Miami Dade Product Control

MIAMI DADE COUNTY

YIPING WANG, P.E.
FLORIDA REGISTRATION
PE #55983
C.A.N. 28677

REVISIONS		
NO.	DATE	DESCRIPTION
1	2/28/12	UPDATE TO FBC2010
2	6/06/12	INCLUDING STRUC. GLAZING OPTION

MCY ENGINEERING, INC.
GLAZING CONSULTANTS
8501 SW 124 AVE. STE. 303A
MIAMI, FL 33183
P: 305.271.0117
F: 786.573.3063
www.MCYEngineering.com
MCY.Engineering@AIL.net

SERIES 8000 HIGH PERFORMANCE UNITIZED CURTAIN WALL SYSTEM (L.M.I.)

NR ARCHITECTURAL PRODUCTS
4348 WESTROADS DRIVE
WEST PALM BEACH, FL 33407
P: (561) 844 - 1121 F: (561) 844 - 6131

DATE	02-26-12
SCALE	AS NOTED
DRAWN	S.L.
PROJECT	0922

DRAWING NO.
AD10-19
D18

SHEET 30 of 46

PERIMETER SEAL

JAMB MULL HT	min	max
10'-0"	0.385"	0.75"
12'-3"	0.472"	0.75"
15'-0"	0.577"	0.75"

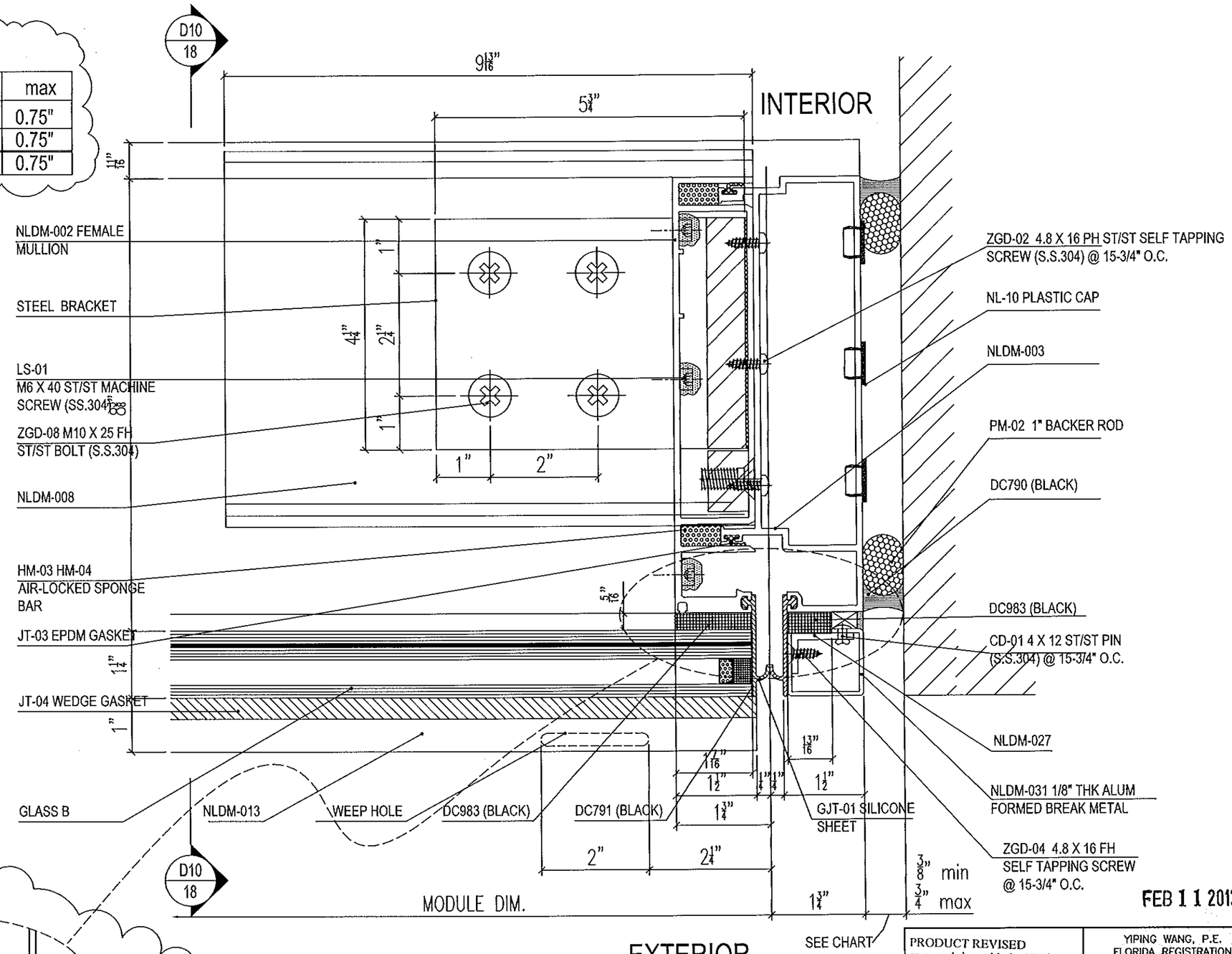

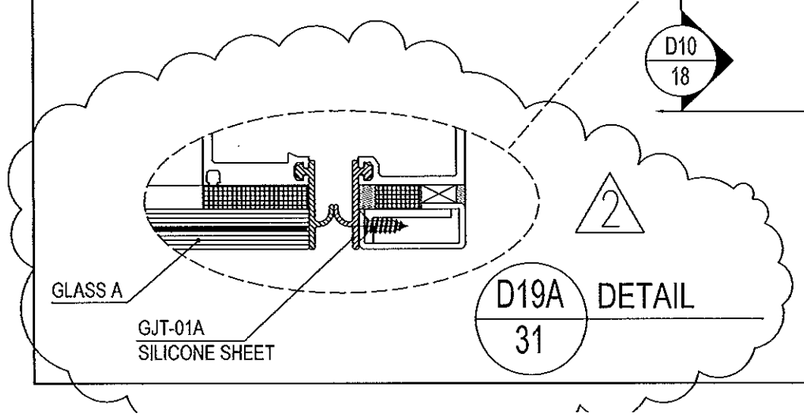

D19A / 31 DETAIL

D19 / 31 DETAIL
RIGHT JAMB AT STACK JOINT

FEB 1 1 2013

PRODUCT REVISED
as complying with the Florida Building Code
Acceptance No 12-0608.04
Expiration Date April 4, 2016
By Manuel Perez
Miami-Dade Product Control

MIAMI DADE COUNTY

YIPING WANG, P.E.
FLORIDA REGISTRATION
PE #55983
C.A.N. 28677

REVISIONS

NO.	DATE	DESCRIPTION
1	2/26/12	UPDATE TO FBC2010
2	6/06/12	INCLUDING STRUC. GLAZING OPTION

MCY ENGINEERING, INC.
GLAZING CONSULTANTS
8501 SW 124 AVE. STE. 205A
MIAMI, FL 33183
P: 305.271.0117
F: 786.573.5063
www.MCYEngineering.com
MCY.Engineering@AOL.net

SERIES 8000 HIGH PERFORMANCE UNITIZED CURTAIN WALL SYSTEM (L.M.I.)

NR ARCHITECTURAL PRODUCTS
4348 WESTROADS DRIVE
WEST PALM BEACH, FL. 33407
P: (561) 844 - 1121 F: (561) 844 - 6131

DATE	02-26-12
SCALE	AS NOTED
DRAWN	S.L.
PROJECT	0922

DRAWING NO.
AD10–19
D19

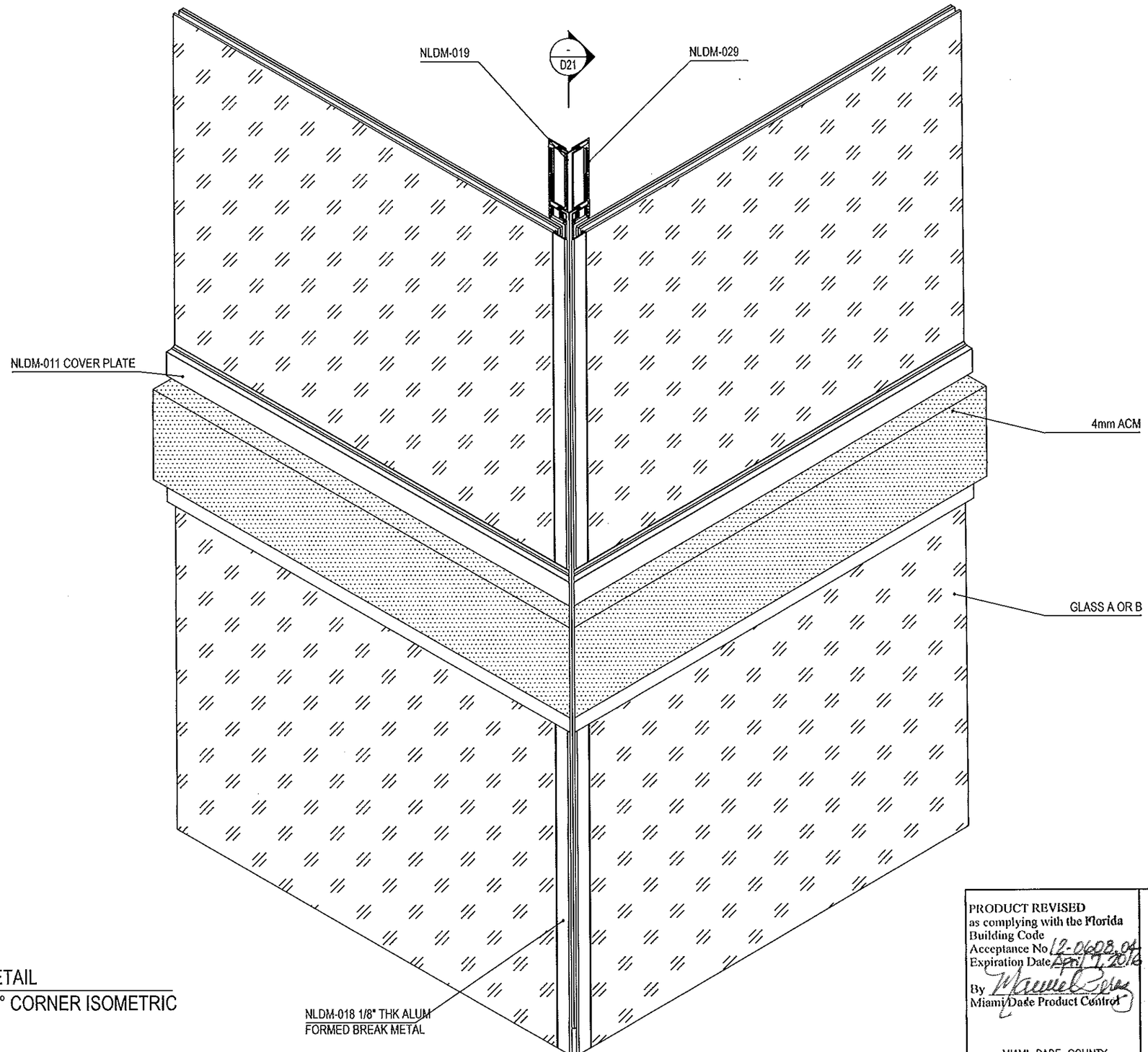

D20 / 32 DETAIL
90° CORNER ISOMETRIC

FEB 11 2013

PRODUCT REVISED
as complying with the Florida
Building Code
Acceptance No 12-0608.04
Expiration Date April 1, 2016
By Miami-Dade Product Control

MIAMI DADE COUNTY

YIPING WANG, P.E.
FLORIDA REGISTRATION
PE #55983
C.A.N. 28677

REVISIONS

NO.	DATE	DESCRIPTION
1	12/26/12	UPDATE TO FBC2010
2	8/06/12	INCLUDING STRUC. GLAZING OPTION

MCY ENGINEERING, INC.
GLAZING CONSULTANTS
8501 SW 124 AVE. STE. 203A
MIAMI, FL 33183
P: 305.271.0117
F: 786.573.5063
www.MCYEngineering.com
MCY.Engineering@AOL.net

SERIES 8000 HIGH PERFORMANCE UNITIZED CURTAIN WALL SYSTEM (L.M.I.)

NR ARCHITECTURAL PRODUCTS
4348 WESTROADS DRIVE
WEST PALM BEACH, FL 33407
P: (561) 844 - 1121 F: (561) 844 - 6131

DATE	02-26-12
SCALE	AS NOTED
DRAWN	S.I.
PROJECT	0922

DRAWING NO.
AD10-19
D20

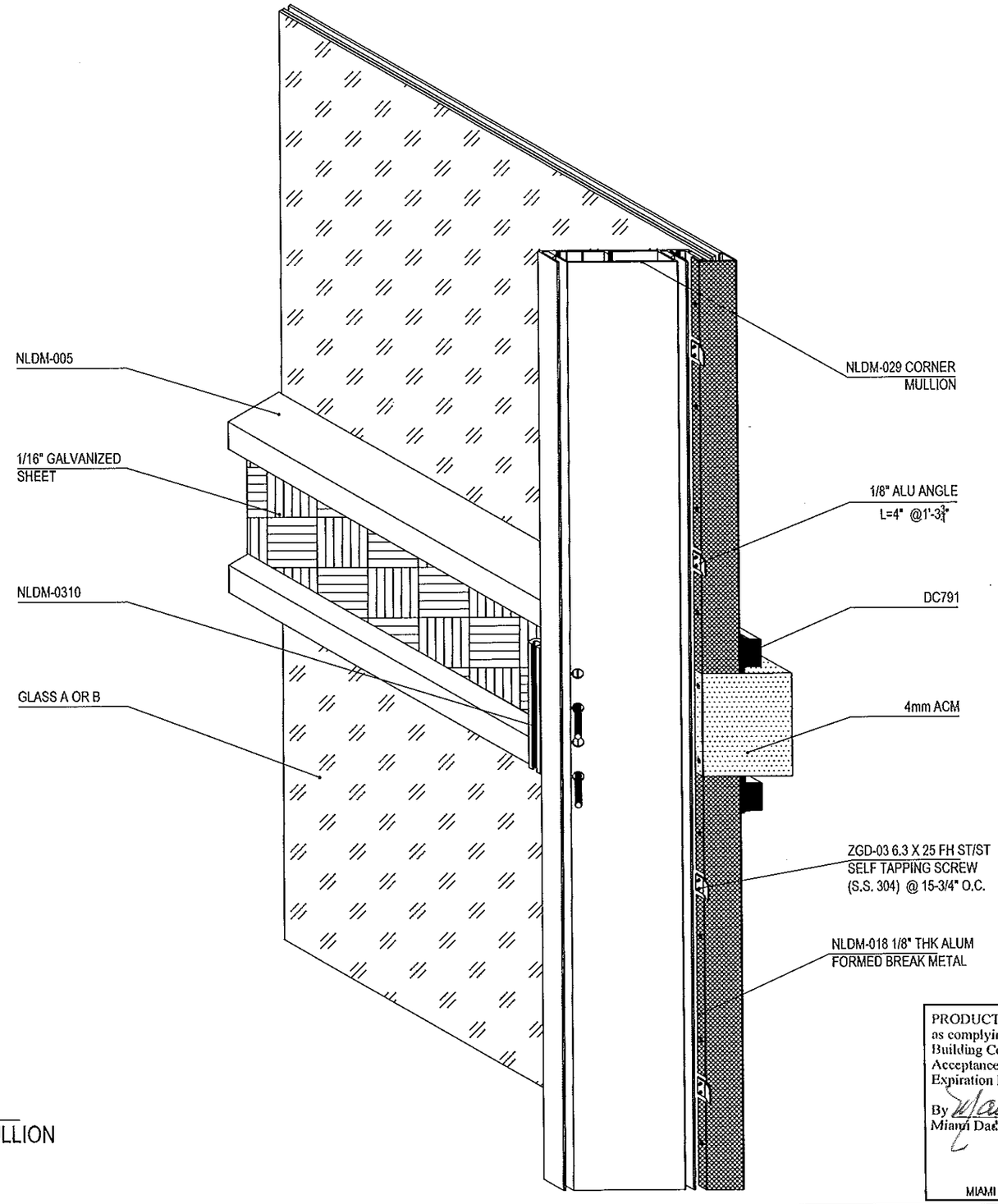

D21 / 33 DETAIL
FEMALE 90° CORNER MULLION
ISOMETRIC

FEB 1 1 2013

PRODUCT REVISED
as complying with the Florida
Building Code
Acceptance No 12-0608.04
Expiration Date April 4, 2016
By Manuel Cruz
Miami Dade Product Control

MIAMI DADE COUNTY

YIPING WANG, P.E.
FLORIDA REGISTRATION
PE #55983
C.A.N. 28677

Yiping Wang

REVISIONS

NO.	DATE	DESCRIPTION
1	2/28/12	UPDATE TO FBC2010
2	8/06/12	INCLUDING STRUC. GLAZING OPTION

MCY ENGINEERING, INC.
GLAZING CONSULTANTS
8501 SW 124 AVE. STE. 205A
MIAMI, FL. 33183
P: 305.271.0117
F: 786.573.3063
www.MCYEngineering.com
MCY.Engineering@AOL.net

SERIES 8000 HIGH PERFORMANCE UNITIZED CURTAIN WALL SYSTEM (L.M.I.)

NR ARCHITECTURAL PRODUCTS
4348 WESTROADS DRIVE
WEST PALM BEACH, FL 33407
P: (561) 844 - 1121 F: (561) 844 - 6131

DATE	02-28-12
SCALE	AS NOTED
DRAWN	S.L.
PROJECT	0922

DRAWING NO.
AD10--19
D21

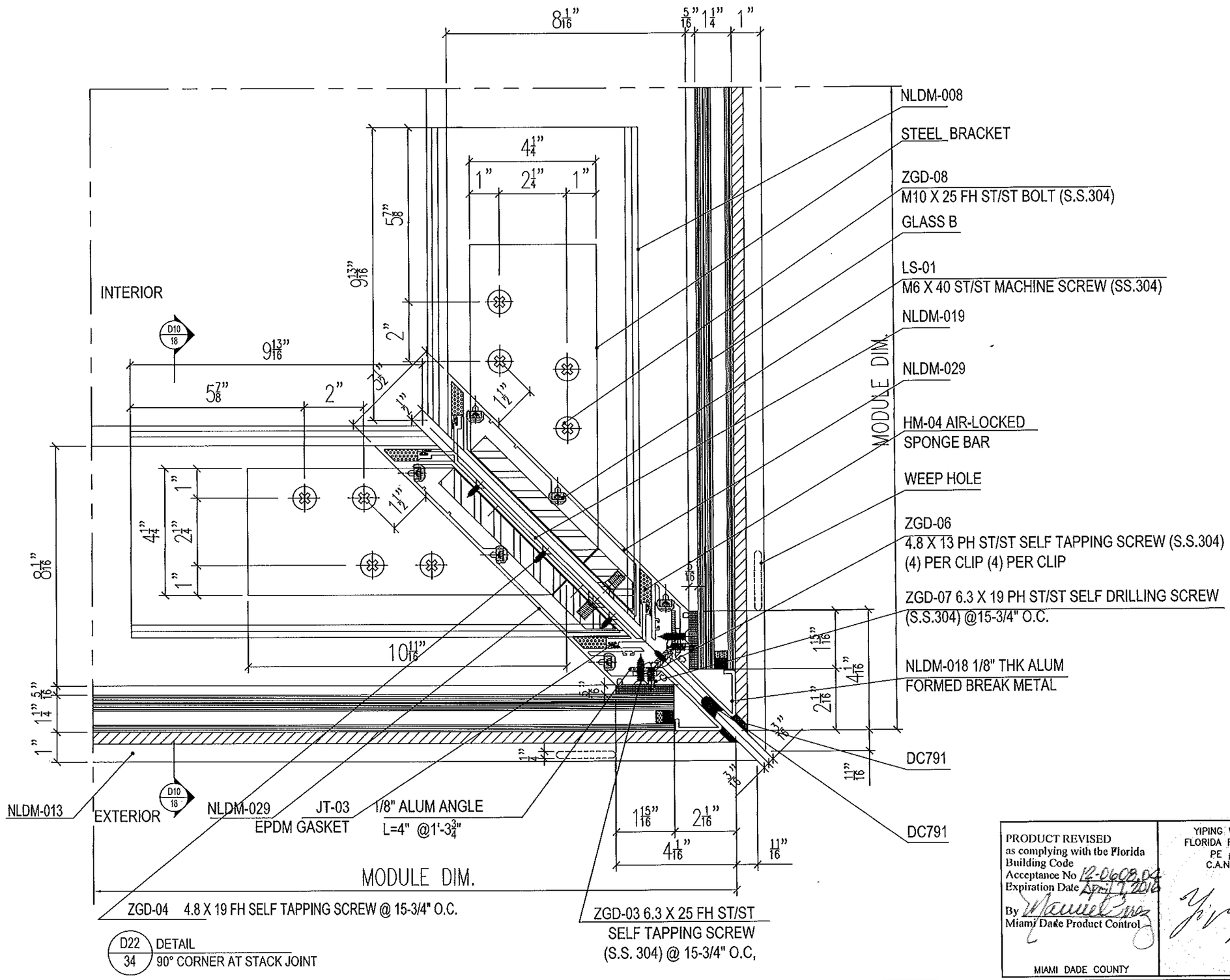

D22 / 34 DETAIL
90° CORNER AT STACK JOINT

PRODUCT REVISED
as complying with the Florida Building Code
Acceptance No 12-0608.04
Expiration Date April 7, 2016
By Manuel Cruz
Miami Dade Product Control

MIAMI DADE COUNTY

YIPING WANG, P.E.
FLORIDA REGISTRATION
PE #55983
C.A.N. 28677

REVISIONS		
NO.	DATE	DESCRIPTION
1	2/28/12	UPDATE TO FBC2010
2	6/08/12	INCLUDING STRUC. GLAZING OPTION

MCY ENGINEERING, INC.
GLAZING CONSULTANTS
8501 SW 124 AVE. STE. 205A
MIAMI, FL. 33183
P: 305.271.0117
F: 786.573.5063
www.MCYEngineering.com
MCY.Engineering@ALL.net

SERIES 8000 HIGH PERFORMANCE UNITIZED CURTAIN WALL SYSTEM (L.M.I.)

NR ARCHITECTURAL PRODUCTS
4348 WESTROADS DRIVE
WEST PALM BEACH, FL 33407
P: (561) 844 - 1121 F: (561) 844 - 6131

DATE	02-28-12
SCALE	AS NOTED
DRAWN	S.L.
PROJECT	0922

DRAWING NO.
AD10-19
D22

SHEET 34 of 46

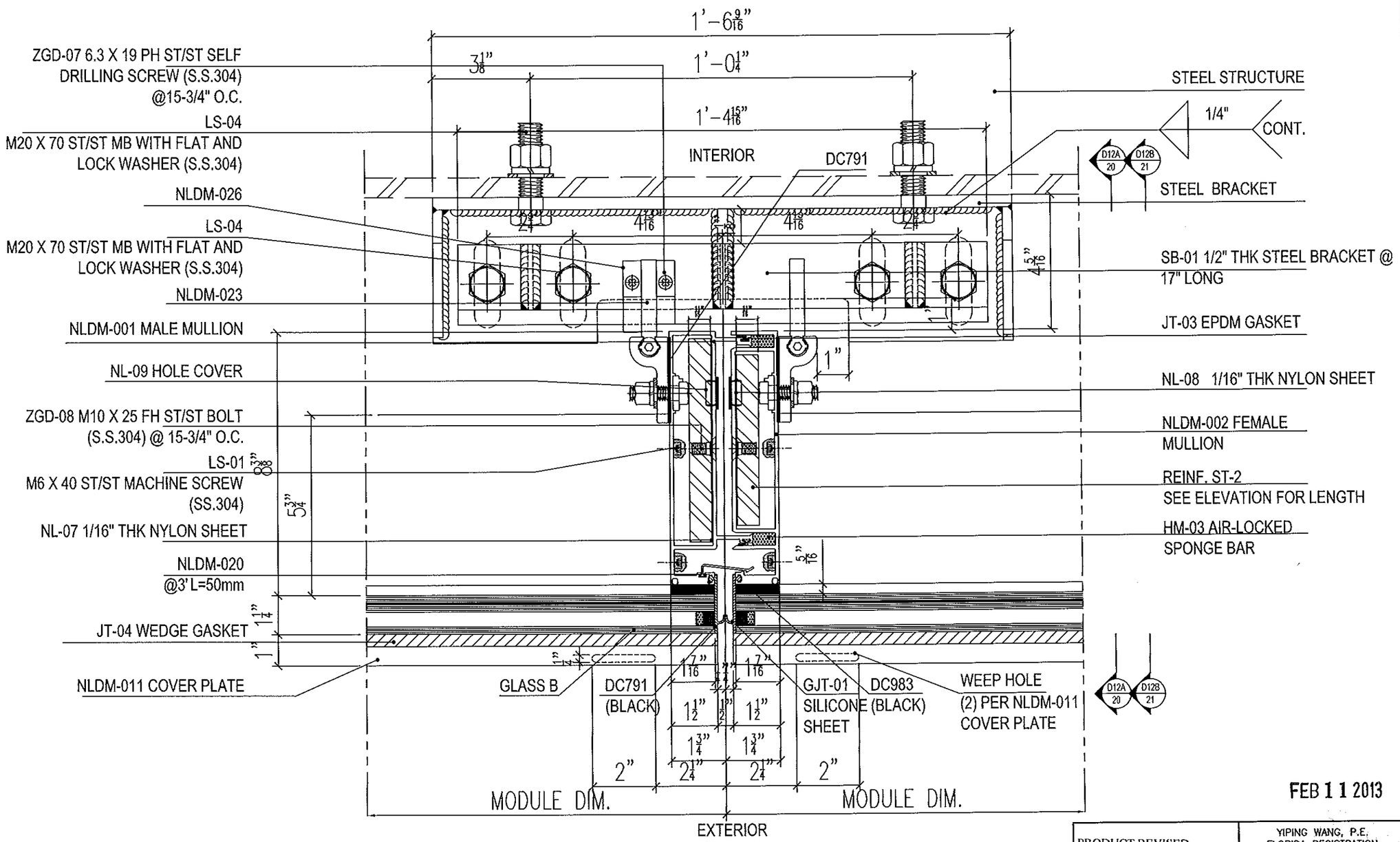

D23 / 35 DETAIL
TYP INTERM MULLION AT SPANDREL AREA

FEB 11 2013

PRODUCT REVISED
as complying with the Florida Building Code
Acceptance No. 12-0608.04
Expiration Date April 7, 2016
By Maureen Perez
Miami Dade Product Control
MIAMI DADE COUNTY

YIPING WANG, P.E.
FLORIDA REGISTRATION
PE #55983
C.A.N. 28677

REVISIONS		
NO.	DATE	DESCRIPTION
1	2/26/12	UPDATE TO FBC2010
2	6/06/12	INCLUDING STRUC. GLAZING OPTION

MCY ENGINEERING, INC.
GLAZING CONSULTANTS
8501 SW 124 AVE. STE. 205A
MIAMI, FL 33183
P: 305.271.0117
F: 786.573.5063
www.MCYEngineering.com
MCY.Engineering@AIL.net

SERIES 8000 HIGH PERFORMANCE UNITIZED CURTAIN WALL SYSTEM (L.M.I.)

NR ARCHITECTURAL PRODUCTS
4348 WESTROADS DRIVE
WEST PALM BEACH, FL. 33407
P: (561) 844 - 1121 F: (561) 844 - 6131

DATE	02-26-12
SCALE	AS NOTED
DRAWN	S.L.
PROJECT	0922

DRAWING NO.
AD10-19
D23

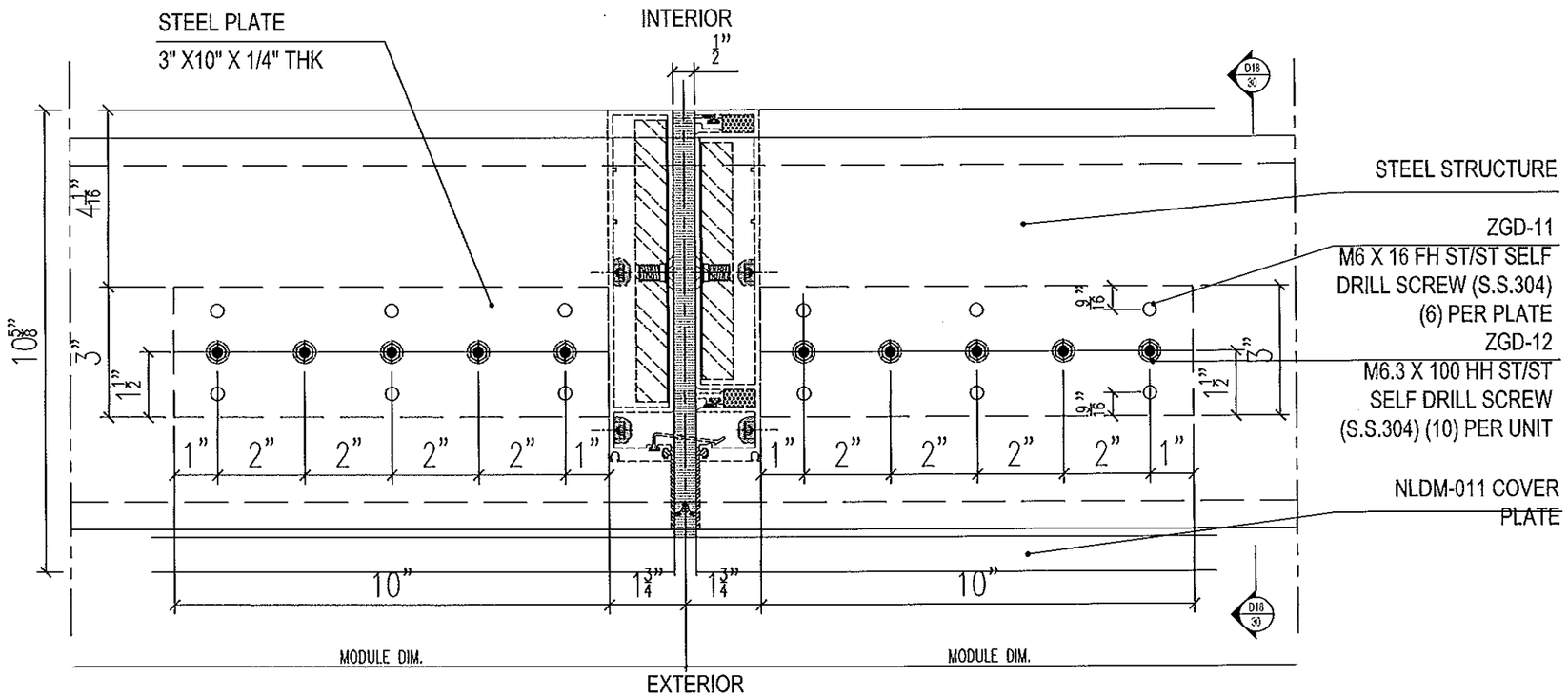

D24A / 36 DETAIL
HEAD ANCHOR AT INTERM MULL

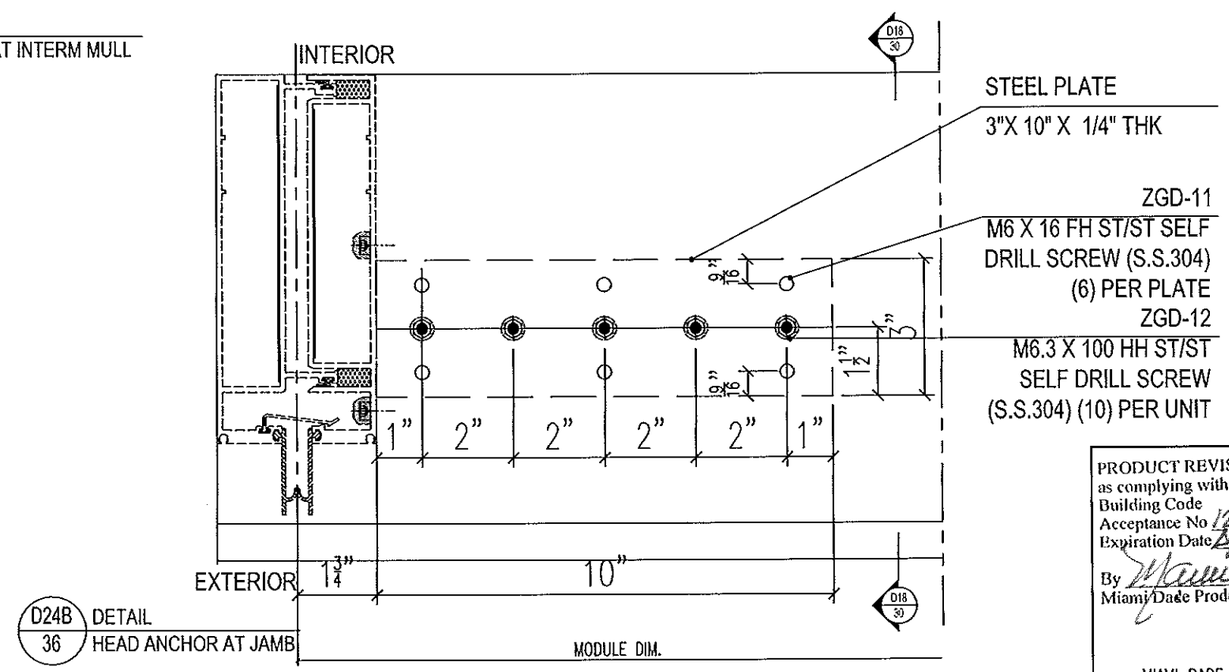

D24B / 36 DETAIL
HEAD ANCHOR AT JAMB

FEB 1 1 2013

PRODUCT REVISED
as complying with the Florida Building Code
Acceptance No 12-0608.04
Expiration Date April 4, 2016
By Miami-Dade Product Control

MIAMI DADE COUNTY

YIPING WANG, P.E.
FLORIDA REGISTRATION
PE #55983
C.A.N. 28677

REVISIONS

NO.	DATE	DESCRIPTION
1	2/26/12	UPDATE TO FBC2010
2	6/06/12	INCLUDING STRUC. GLAZING OPTION

MCY ENGINEERING, INC.
GLAZING CONSULTANTS
8501 SW 124 AVE. STE. 203A
MIAMI, FL 33183
P: 305.271.0117
F: 786.573.5063
www.MCYEngineering.com
MCY.Engineering@AOL.net

SERIES 8000 HIGH PERFORMANCE UNITIZED CURTAIN WALL SYSTEM (L.M.I.)

NR ARCHITECTURAL PRODUCTS
4348 WESTROADS DRIVE
WEST PALM BEACH, FL 33407
P: (561) 844 - 1121 F: (561) 844 - 6131

DATE	02-26-12
SCALE	AS NOTED
DRAWN	S.L.
PROJECT	0922

DRAWING NO.
AD10-19
D24

SHEET 36 of 46

PERIMETER SEAL

JAMB MULL HT	min	max
10'-0"	0.385"	0.75"
12'-3"	0.472"	0.75"
15'-0"	0.577"	0.75"

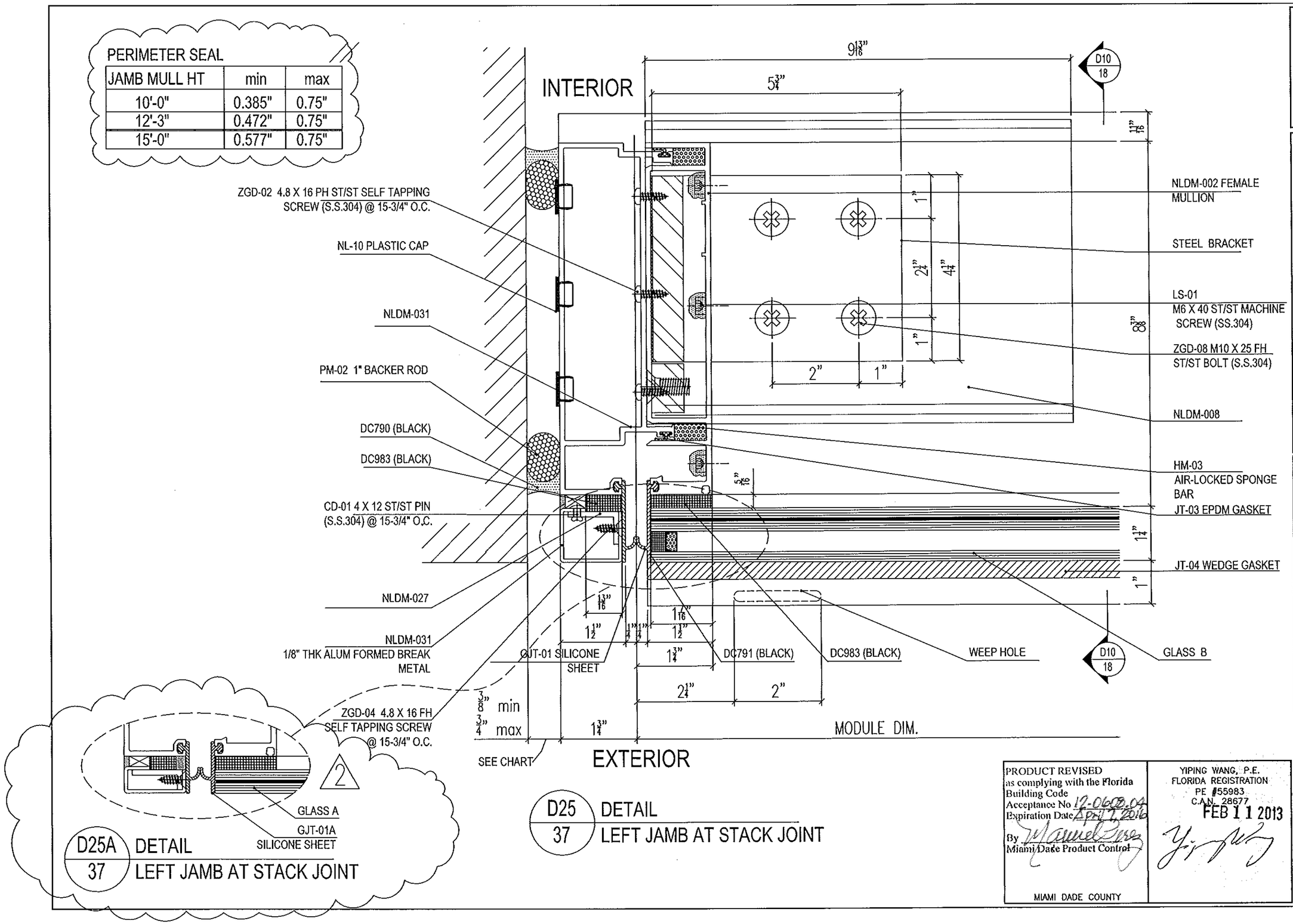

REVISIONS		
NO.	DATE	DESCRIPTION
1	2/26/12	UPDATE TO FBC2010
2	6/06/12	INCLUDING STRUC. GLAZING OPTION

MCY ENGINEERING, INC.
GLAZING CONSULTANTS
8501 SW 124 AVE. STE. 205A
MIAMI, FL. 33183
P: 305.271.0117
F: 786.573.5063
www.MCYEngineering.com
MCY.Engineering@AIL.net

SERIES 8000 HIGH PERFORMANCE UNITIZED CURTAIN WALL SYSTEM (L.M.I.)

NR ARCHITECTURAL PRODUCTS
4348 WESTROADS DRIVE
WEST PALM BEACH, FL. 33407
P: (561) 844 - 1121 F: (561) 844 - 6131

PRODUCT REVISED
as complying with the Florida Building Code
Acceptance No 12-0608.04
Expiration Date April 1, 2016
By Manuel Cruz
Miami Dade Product Control

MIAMI DADE COUNTY

YIPING WANG, P.E.
FLORIDA REGISTRATION
PE #55983
C.A.N. 28677
FEB 11 2013

DATE	02-26-12
SCALE	AS NOTED
DRAWN	S.L
PROJECT	0922

DRAWING NO.
AD10-19
D25

SHEET 37 of 46

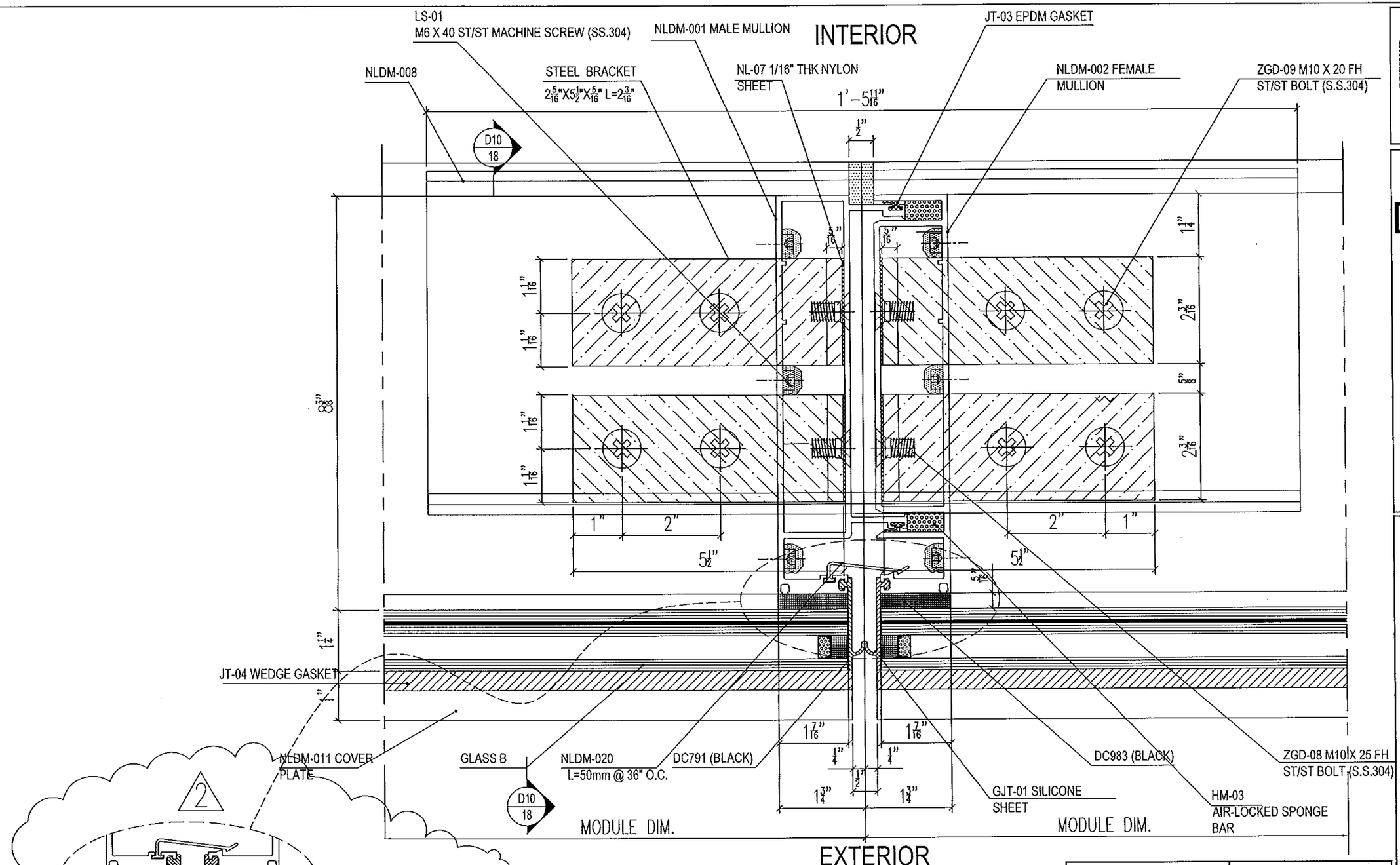

REVISIONS			
NO.	DATE	DESCRIPTION	
1	2/26/12	UPDATE TO FBC2010	
2	6/06/12	INCLUDING STRUC. GLAZING OPTION	

MCY ENGINEERING, INC.
GLAZING CONSULTANTS
8501 SW 124 AVE. STE. 205A
MIAMI, FL. 33183
P: 305.271.0117
F: 786.573.5063
www.MCYEngineering.com
MCY.Engineering@ATL.net

SERIES 8000 HIGH PERFORMANCE UNITIZED CURTAIN WALL SYSTEM (L.M.I.)

NR ARCHITECTURAL PRODUCTS
4348 WESTROADS DRIVE
WEST PALM BEACH, FL. 33407
P: (561) 844 - 1121 F: (561) 844 - 6131

PRODUCT REVISED
as complying with the Florida Building Code
Acceptance No 12-0608.04
Expiration Date April 4, 2016
By Manuel Cruz
Miami Dade Product Control

MIAMI DADE COUNTY

YIPING WANG, P.E.
FLORIDA REGISTRATION
PE #55983
C.A.N. 28677

DATE	02-26-12
SCALE	AS NOTED
DRAWN	S.L
PROJECT	0922

DRAWING NO.
AD10-19
D26A

SHEET 38 of 46

FEB 11 2013

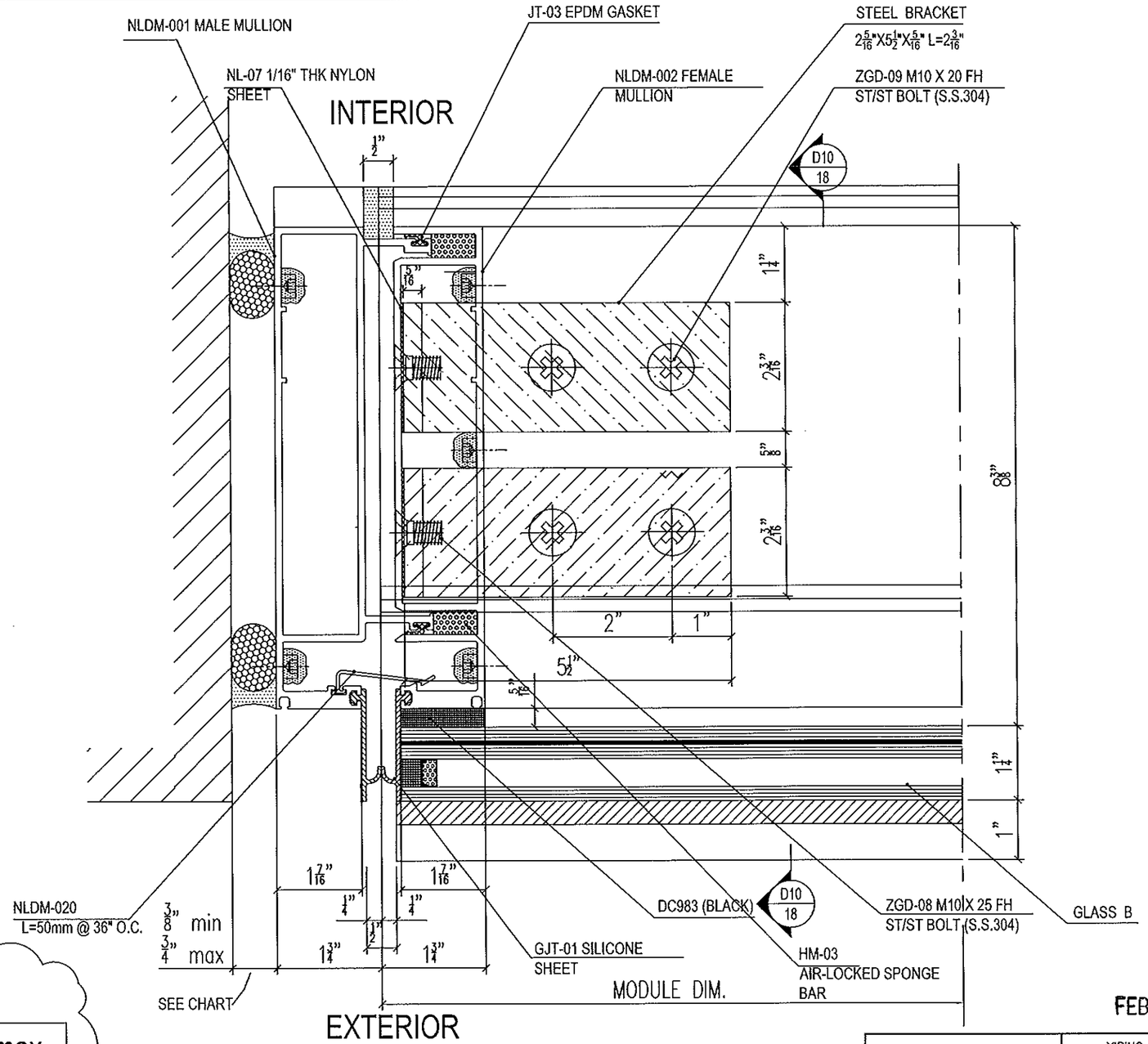

PERIMETER SEAL

JAMB MULL HT	min	max
10'-0"	0.385"	0.75"
12'-3"	0.472"	0.75"
15'-0"	0.577"	0.75"

D26B / 39 DETAIL
LEFT JAMB BELOW STACK JOINT

FEB 11 2013

PRODUCT REVISED
as complying with the Florida Building Code
Acceptance No. 12-0608.04
Expiration Date April 7, 2016
By Manuel Perez
Miami Dade Product Control

MIAMI DADE COUNTY

YIPING WANG, P.E.
FLORIDA REGISTRATION
PE #55983
C.A.N. 28677

REVISIONS		
NO.	DATE	DESCRIPTION
1	2/28/12	UPDATE TO FBC2010
2	8/06/12	INCLUDING STRUC. GLAZING OPTION

MCY ENGINEERING, INC.
GLAZING CONSULTANTS
8501 SW 124 AVE. STE. 205A
MIAMI, FL. 33183
P: 305.271.0117
F: 786.573.5063
www.MCYEngineering.com
MCY.Engineering@AIL.net

SERIES 8000 HIGH PERFORMANCE UNITIZED CURTAIN WALL SYSTEM (L.M.I.)

NR ARCHITECTURAL PRODUCTS
4348 WESTROADS DRIVE
WEST PALM BEACH, FL. 33407
P: (561) 844 - 1121 F: (561) 844 - 6131

DATE	02-26-12
SCALE	AS NOTED
DRAWN	S.I.
PROJECT	0922

DRAWING NO.
AD10-19
D26B

SHEET 39 of 46

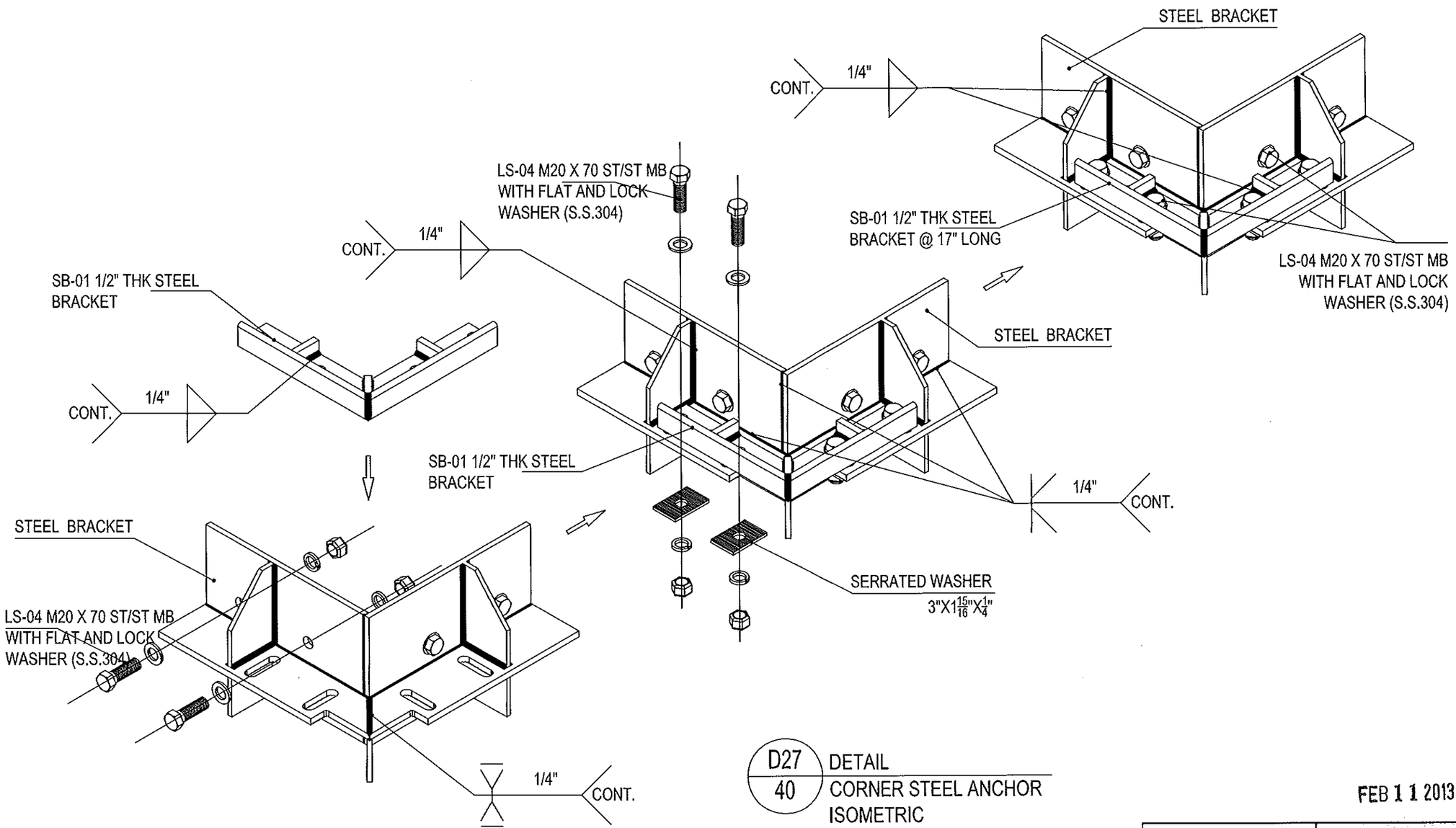

D27 / 40 DETAIL
CORNER STEEL ANCHOR
ISOMETRIC

FEB 1 1 2013

PRODUCT REVISED
as complying with the Florida
Building Code
Acceptance No 12-0608.04
Expiration Date April 1 2016
By Manuel Inez
Miami Dade Product Control

MIAMI DADE COUNTY

YIPING WANG, P.E.
FLORIDA REGISTRATION
PE #55983
C.A.N. 28677

REVISIONS		
NO.	DATE	DESCRIPTION
1	12/28/12	UPDATE TO FBC2010
2	6/06/12	INCLUDING STRUC. GLAZING OPTION

MCY ENGINEERING, INC.
GLAZING CONSULTANTS
8501 SW 124 AVE. STE. 205A
MIAMI, FL. 33183
P: 305.271.0117
F: 786.573.5063
www.MCYEngineering.com
MCY.Engineering@AIL.net

SERIES 8000 HIGH PERFORMANCE UNITIZED CURTAIN WALL SYSTEM (L.M.I.)

NR ARCHITECTURAL PRODUCTS
4348 WESTROADS DRIVE
WEST PALM BEACH, FL. 33407
P: (561) 844 - 1121 F: (561) 844 - 6131

DATE	02-28-12
SCALE	AS NOTED
DRAWN	S.L.
PROJECT	0922

DRAWING NO.
AD10-19
D27

SHEET 40 of 46

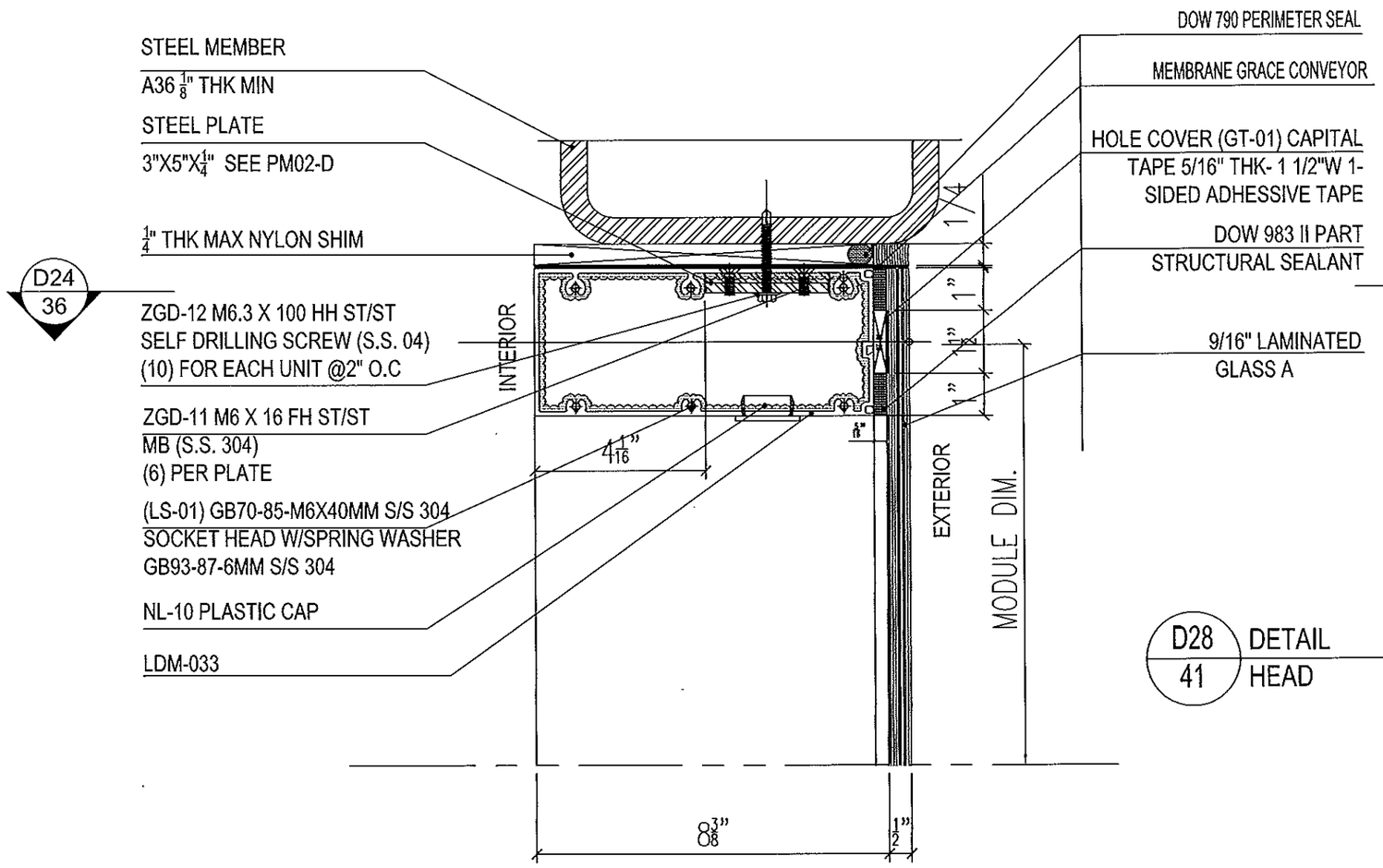

D28 / 41 DETAIL HEAD

OPTION A

CONCRETE SUBSTRATE

CONCRETE fc'= 3000psi min

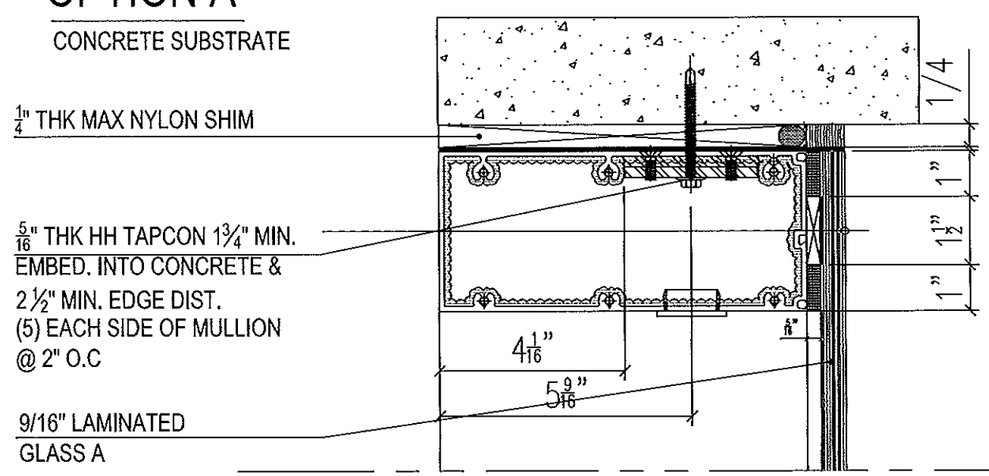

D28A / 41 DETAIL HEAD (OPTIONAL)

FEB 1 1 2013

NEW SHEET

PRODUCT REVISED
as complying with the Florida
Building Code
Acceptance No 12-0608.04
Expiration Date April 7, 2016
By Manuel Inez
Miami Dade Product Control

MIAMI DADE COUNTY

YIPING WANG, P.E.
FLORIDA REGISTRATION
PE #55983
C.A.N. 28677

REVISIONS		
NO.	DATE	DESCRIPTION
1	2/26/12	UPDATE TO FBC2010
2	8/06/12	INCLUDING STRUC. GLAZING OPTION

MCY ENGINEERING, INC.
GLAZING CONSULTANTS
8501 SW 124 AVE. STE. 205A
MIAMI, FL 33183
P: 305.271.0117
F: 786.573.5063
www.MCYEngineering.com
MCY.Engineering@AIL.net

SERIES 8000 HIGH PERFORMANCE UNITIZED CURTAIN WALL SYSTEM (L.M.I.)

NR ARCHITECTURAL PRODUCTS
4348 WESTROADS DRIVE
WEST PALM BEACH, FL 33407
P: (561) 844 - 1121 F: (561) 844 - 6131

DATE	02-26-12
SCALE	AS NOTED
DRAWN	S.I.
PROJECT	0922

DRAWING NO.
AD10-19
D28

SHEET 41 of 46

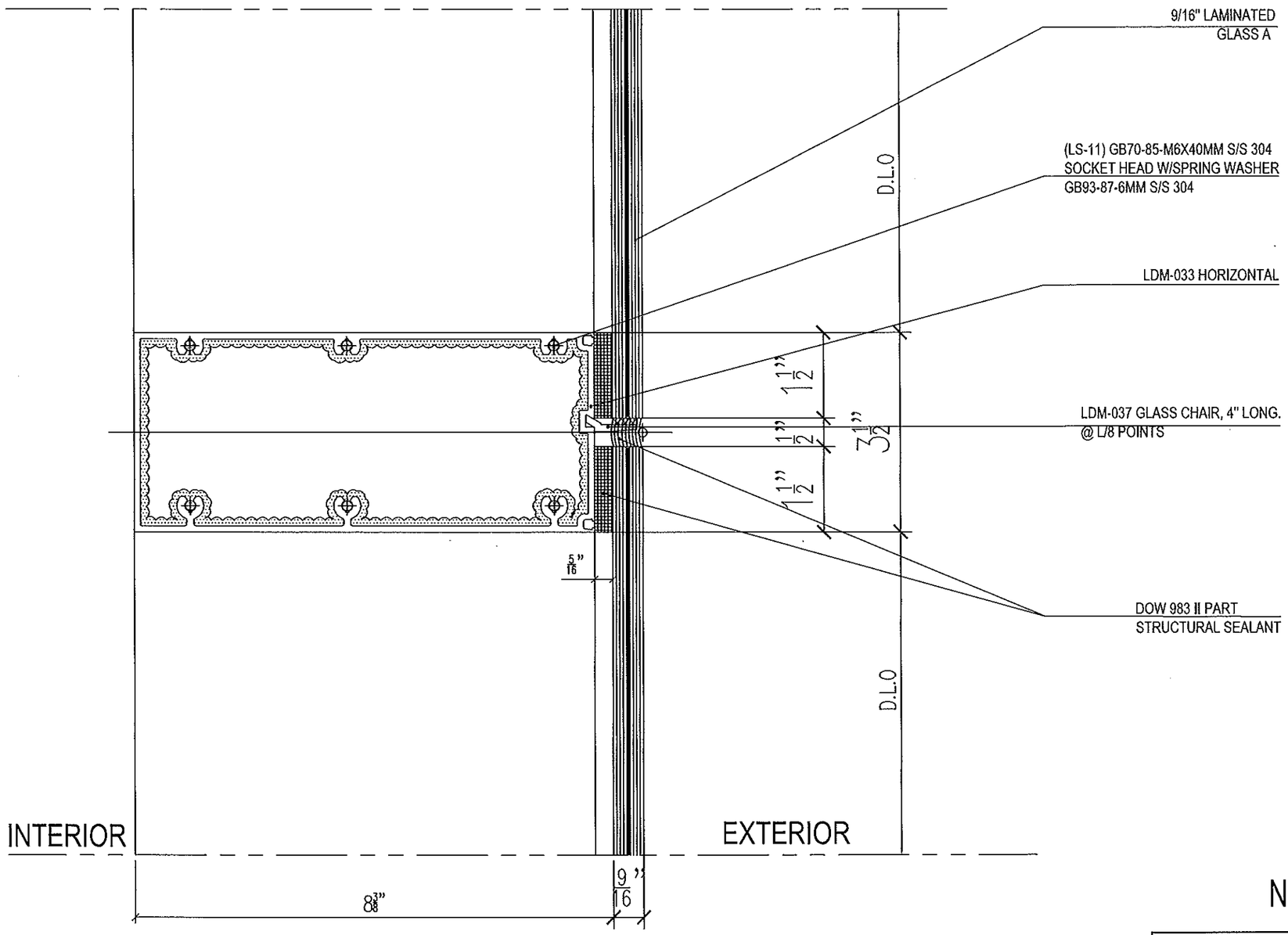

D29 / 42 DETAIL INTERMEDIATE HORIZONTAL

FEB 1 1 2013

NEW SHEET

PRODUCT REVISED
as complying with the Florida Building Code
Acceptance No 12-0688.04
Expiration Date April 7, 2016
By Maurel Perez
Miami Dade Product Control

MIAMI DADE COUNTY

YIPING WANG, P.E.
FLORIDA REGISTRATION
PE #55983
C.A.N. 28677

REVISIONS		
NO.	DATE	DESCRIPTION
1	2/26/12	UPDATE TO FBC2010
2	6/06/12	INCLUDING STRUC. GLAZING OPTION

MCY ENGINEERING, INC.
GLAZING CONSULTANTS
8501 SW 121 AVE. STE. 205A
MIAMI, FL 33183
P: 305.271.0117
F: 786.573.5063
www.MCYEngineering.com
MCY.Engineering@ATL.net

SERIES 8000 HIGH PERFORMANCE UNITIZED CURTAIN WALL SYSTEM (L.M.I.)

NR ARCHITECTURAL PRODUCTS
4348 WESTROADS DRIVE
WEST PALM BEACH, FL. 33407
P: (561) 844 - 1121 F: (561) 844 - 6131

DATE	02-26-12
SCALE	AS NOTED
DRAWN	S.L.
PROJECT	0922

DRAWING NO. AD10-19 D29

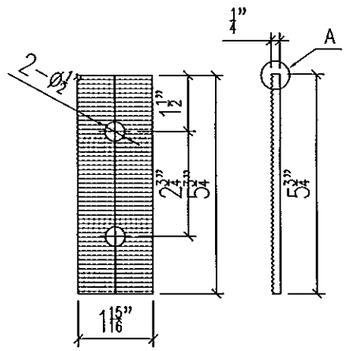

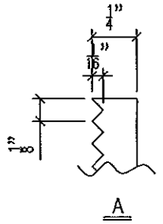

JAMB D14A 23 SIM. | TYP D15A 25 SIM. | CORNER D16 28 SIM.

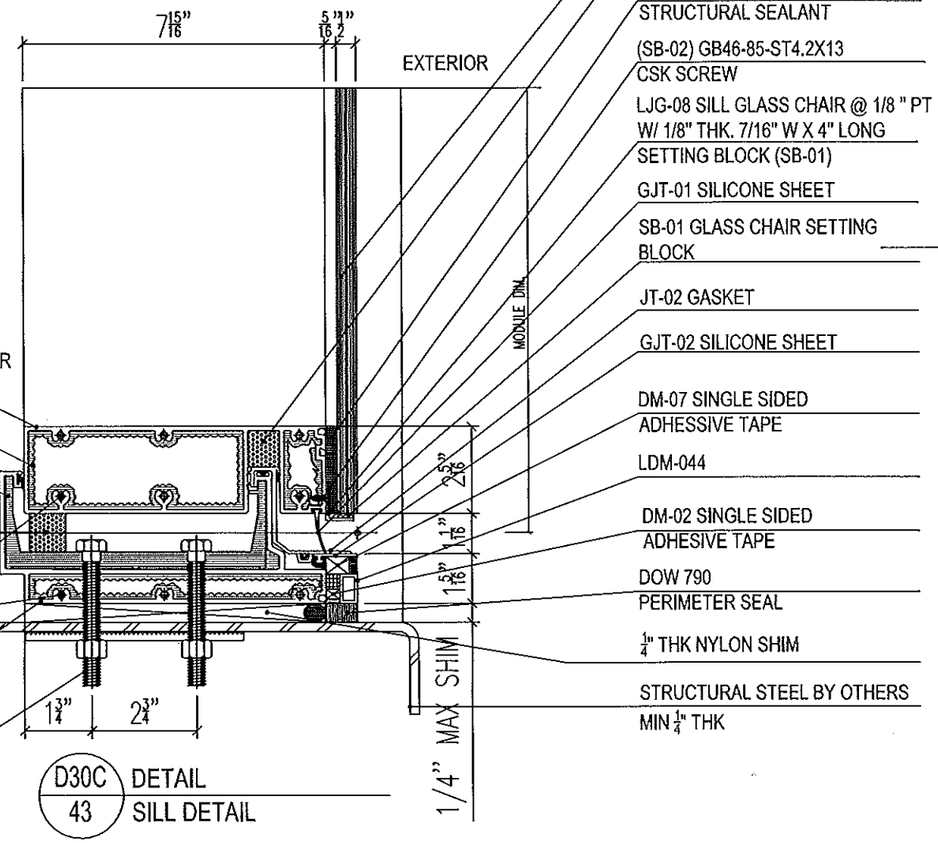

D30C 43 DETAIL SILL DETAIL

JAMB D14A 23 SIM. | TYP D15A 25 SIM. | CORNER D16 28 SIM.

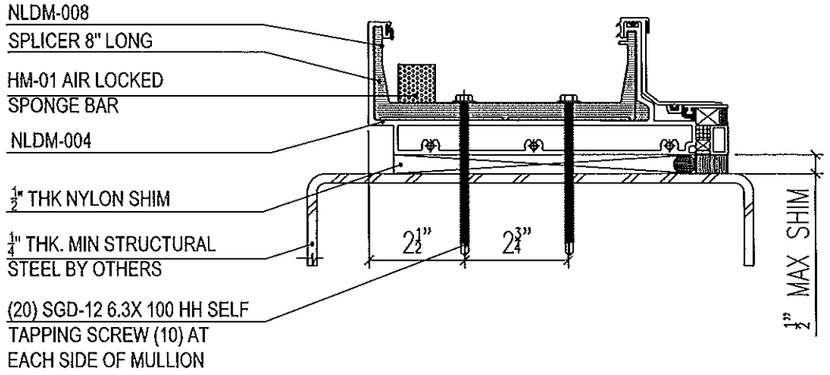

D30B 43 DETAIL STARTER SILL

JAMB D15C 27 SIM. | TYP D15B 26 SIM.

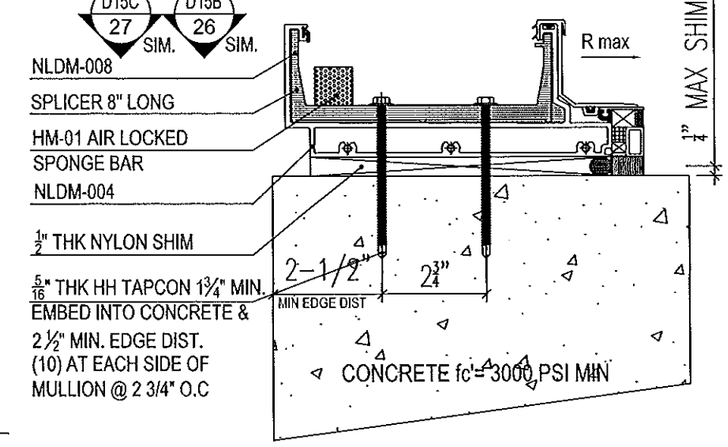

TYP D15B 26 SIM. | JAMB D15C 27 SIM.

1/4" MAX SHIM

D30A 43 DETAIL STARTER SILL

MAX LOAD Rmax = 2597 LBS
MAX LOAD Rmax = MULLION TRIB WIDTH X FRAME HEIGHT X DESIGN LOAD / 2

FEB 11 2013

PRODUCT REVISED
as complying with the Florida Building Code
Acceptance No 12-0608.04
Expiration Date April 7, 2016
By Miami Dade Product Control

MIAMI-DADE COUNTY

YIPING WANG, P.E.
FLORIDA REGISTRATION
PE #55983
C.A.N. 28677

NEW SHEET

REVISIONS			
NO.	DATE	DESCRIPTION	
1	2/28/12	UPDATE TO FBC2010	
2	6/06/12	INCLUDING STRUC. GLAZING OPTION	

MCY ENGINEERING, INC.
GLAZING CONSULTANTS
8501 SW 124 AVE. STE. 205A
MIAMI, FL. 33183
P: 305.271.0117
F: 786.573.5063
www.MCYEngineering.com
MCY.Engineering@AOL.net

SERIES 8000 HIGH PERFORMANCE UNITIZED CURTAIN WALL SYSTEM (L.M.I.)

NR ARCHITECTURAL PRODUCTS
4348 WESTROADS DRIVE
WEST PALM BEACH, FL. 33407
P: (561) 844 - 1121 F: (561) 844 - 6131

DATE	02-28-12
SCALE	AS NOTED
DRAWN	S.L
PROJECT	0922

DRAWING NO. AD10-19 D30

SHEET 43 of 46