MIAMI-DADE COUNTY
PRODUCT CONTROL SECTION
11805 SW 26 Street, Room 208
Miami, Florida 33175-2474
T (786) 315-2590 F (786) 315-2599
www.miamidade.gov/economy

DEPARTMENT OF REGULATORY AND ECONOMIC RESOURCES (RER)
BOARD AND CODE ADMINISTRATION DIVISION

NOTICE OF ACCEPTANCE (NOA)

Miami Tech, Inc.
3611 NW 74 Street
Miami, FL 33147

SCOPE:

This NOA is being issued under the applicable rules and regulations governing the use of construction materials. The documentation submitted has been reviewed and accepted by Miami-Dade County RER-Product Control Section to be used in Miami Dade County and other areas where allowed by the Authority Having Jurisdiction (AHJ).

This NOA shall not be valid after the expiration date stated below. The Miami-Dade County Product Control Section (In Miami Dade County) and/or the AHJ (in areas other than Miami Dade County) reserve the right to have this product or material tested for quality assurance purposes. If this product or material fails to perform in the accepted manner, the manufacturer will incur the expense of such testing and the AHJ may immediately revoke, modify, or suspend the use of such product or material within their jurisdiction. RER reserves the right to revoke this acceptance, if it is determined by Miami-Dade County Product Control Section that this product or material fails to meet the requirements of the applicable building code.

This product is approved as described herein, and has been designed to comply with the Florida Building Code, including the High Velocity Hurricane Zone.

DESCRIPTION: Aluminum A/C Stand

APPROVAL DOCUMENT: Drawing No. **12-MTI-01-04**, titled "Aluminum A/C Stand HVHZ Compliant", sheets 1 through 10 of 10, dated 01/10/2007, with last revision dated 08/16/2012, prepared by Engineering Express, signed and sealed by Frank L. Bennardo, P.E., bearing the Miami-Dade County Product Control revision stamp with the Notice of Acceptance number and expiration date by the Miami-Dade County Product Control Section.

MISSILE IMPACT RATING: None

LABELING: Each unit shall bear a permanent label with the manufacturer's name or logo, city, state and following statement: "Miami-Dade County Product Control Approved", unless otherwise noted herein.

RENEWAL of this NOA shall be considered after a renewal application has been filed and there has been no change in the applicable building code negatively affecting the performance of this product.

TERMINATION of this NOA will occur after the expiration date or if there has been a revision or change in the materials, use, and/or manufacture of the product or process. Misuse of this NOA as an endorsement of any product, for sales, advertising or any other purposes shall automatically terminate this NOA. Failure to comply with any section of this NOA shall be cause for termination and removal of NOA.

ADVERTISEMENT: The NOA number preceded by the words Miami-Dade County, Florida, and followed by the expiration date may be displayed in advertising literature. If any portion of the NOA is displayed, then it shall be done in its entirety.

INSPECTION: A copy of this entire NOA shall be provided to the user by the manufacturer or its distributors and shall be available for inspection at the job site at the request of the Building Official.

This NOA **revises NOA # 08-1202.03** and consists of this page 1 and evidence page E-1, as well as approval document mentioned above.

The submitted documentation was reviewed by **Carlos M. Utrera, P.E.**

MIAMI-DADE COUNTY APPROVED

10/04/2012

NOA No. 12-0612.29
Expiration Date: January 15, 2014
Approval Date: October 11, 2012

NOTICE OF ACCEPTANCE: EVIDENCE SUBMITTED

A. DRAWINGS

1. Drawing No. **12-MTI-01-04**, titled "Aluminum A/C Stand HVHZ Compliant", sheets 1 through 10 of 10, dated 01/10/2007, with last revision dated 08/16/2012, prepared by Engineering Express, signed and sealed by Frank L. Bennardo, P.E.

B. TESTS

1. None.

C. CALCULATIONS

1. Revised structural calculations prepared by Engineering Express, dated 08/16/2012, signed and sealed by Frank L. Bennardo, P.E.
2. Structural calculations prepared by Engineering Express, dated 06/05/2012, signed and sealed by Frank L. Bennardo, P.E.

   "Submitted under NOA # 08-1202.03"

3. Rational analysis and engineering design calculations prepared by Engineering Express, complying with F.B.C 2007, dated 11/20/2008, signed and sealed by Frank L. Bennardo, P.E.

D. QUALITY ASSURANCE

1. Miami-Dade Department of Regulatory and Economic Resources (RER)

E. MATERIAL CERTIFICATIONS

1. None

F. STATEMENTS

1. Drawing No. **12-MTI-01-04** statement of code conformance to 2010 FBC, issued by Engineering Express, dated 08/21/2012, signed and sealed by Frank L. Bennardo, P.E.

   "Submitted under NOA # 08-1202.03"

2. Statement letter of conformance issued by Engineering Express, dated 11/19/2008, signed and sealed by Frank L. Bennardo, P.E.
3. Statement letter of no financial interest issued by Engineering Express, dated 11/19/2008, signed and sealed by Frank L. Bennardo, P.E.

10/04/2012

Carlos M. Utrera, P.E.
Product Control Examiner
NOA No. 12-0612.29
Expiration Date: January 15, 2014
Approval Date: October 11, 2012

ALUMINUM STANDS FOR MECHANICAL UNITS

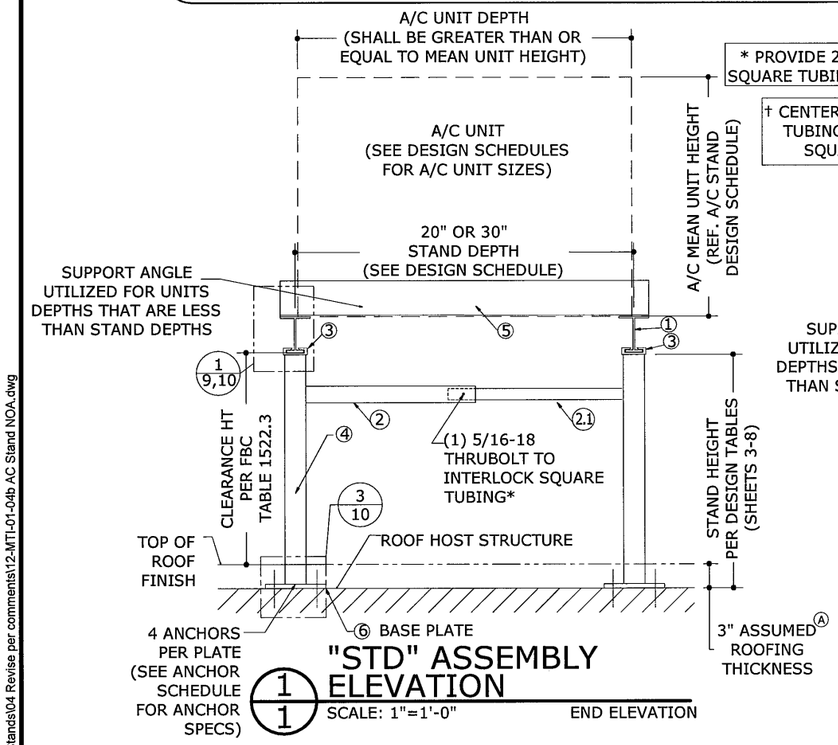

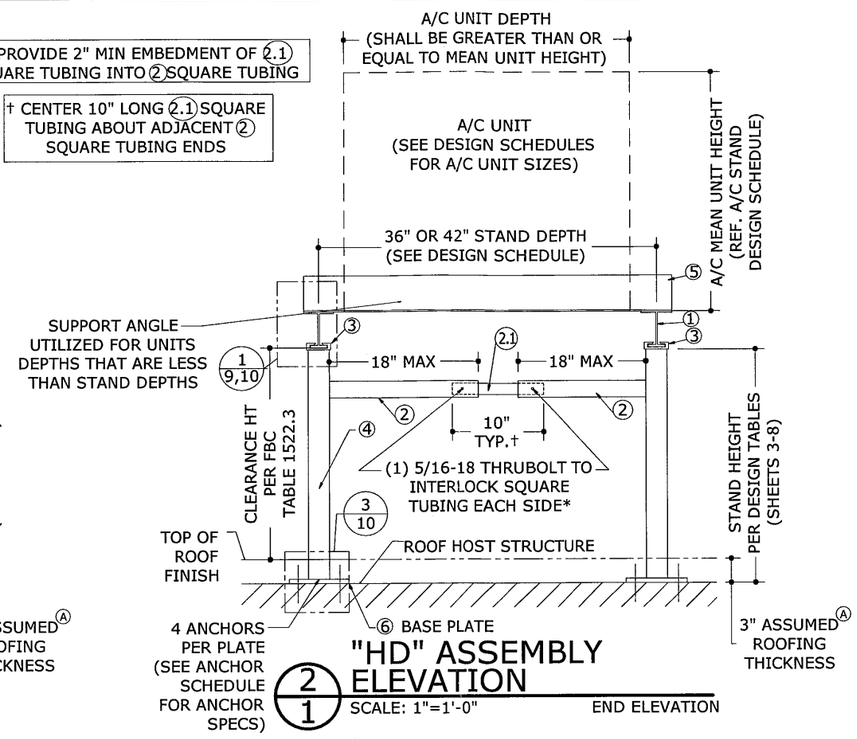

[A]UTILIZE NEXT-HIGHEST STAND HEIGHT FOR LARGER ROOF THICKNESS. FOR ROOFING WITHOUT INSULATION OMIT 3" THICKNESS AND UTILIZE CLEAR HEIGHT FROM FINISHED FLOOR.

UTILIZE NEXT-SMALLEST STAND DEPTH FOR VALUES IN BETWEEN EXISTING TABLES

75# MIN./450 # MAX UNIT WEIGHT AS VERIFIED BY OTHERS, TYP.

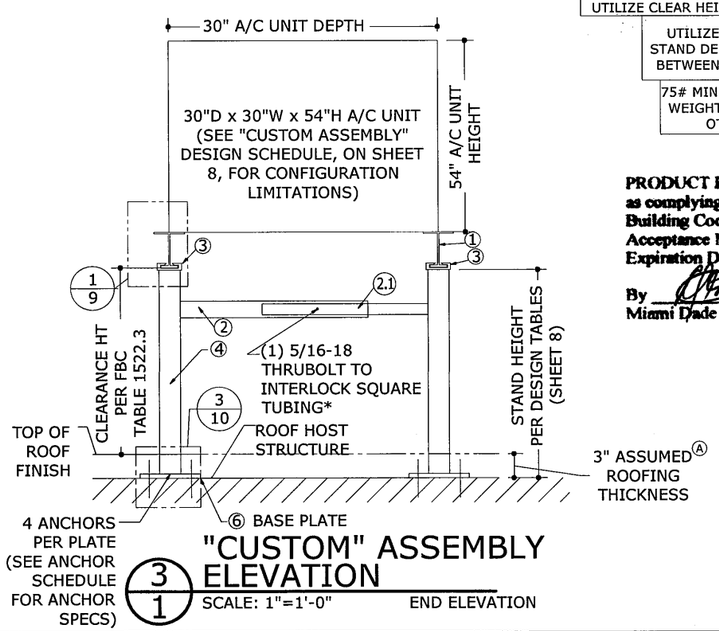

PRODUCT REVISED
as complying with the Florida Building Code
Acceptance No 12-0612.29
Expiration Date 01/15/2014
By _____
Miami Dade Product Control

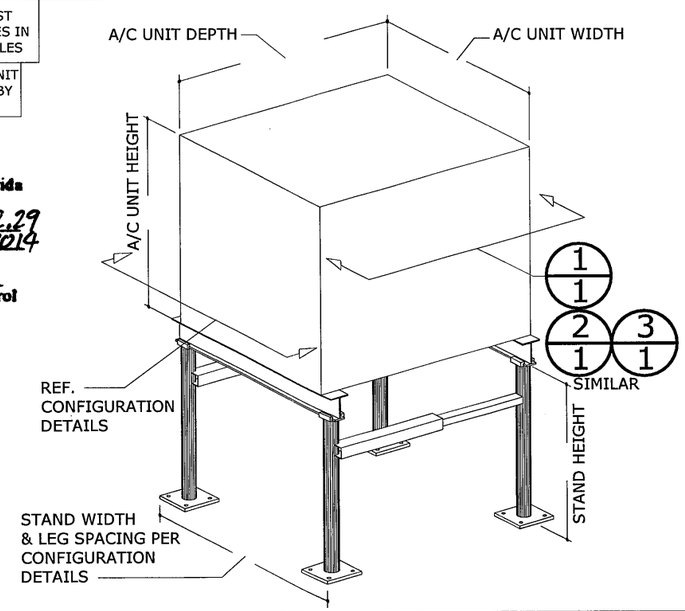

MAXIMUM ALLOWABLE DESIGN PRESSURES:

AS NOTED IN DESIGN SCHEDULES

DESIGN NOTES:

DESIGN PRESSURES CALCULATED FOR USE WITH THIS SYSTEM SHALL BE DETERMINED SEPARATELY ON A JOB-SPECIFIC BASIS IN ACCORDANCE WITH THE GOVERNING CODE USING ASD METHODOLOGY. SITE-SPECIFIC PRESSURE REQUIREMENTS AS DETERMINED IN ACCORDANCE WITH ASCE 7-10 AND CHAPTER 16 OF THE 2010 FLORIDA BUILDING CODE SHALL BE LESS THAN OR EQUAL TO THE LATERAL AND UPLIFT DESIGN PRESSURE CAPACITY VALUES LISTED HEREIN FOR ANY ASSEMBLY AS SHOWN.

GENERAL NOTES

1. THIS SYSTEM HAS BEEN DESIGNED AND SHALL BE FABRICATED IN ACCORDANCE WITH THE STRUCTURAL PROVISIONS OF THE 2010 FLORIDA BUILDING CODE.
2. MAXIMUM DIMENSIONS AND WEIGHT OF A/C UNIT SHALL CONFORM TO SPECIFICATIONS STATED HEREIN, MINIMUM 75LB OR MAXIMUM AS LISTED HEREIN.
3. THE ARCHITECT/ENGINEER OF RECORD FOR THE PROJECT SUPERSTRUCTURE WITH WHICH THIS DESIGN IS USED SHALL BE RESPONSIBLE FOR THE INTEGRITY OF ALL SUPPORTING SURFACES TO THIS DESIGN WHICH SHALL BE COORDINATED BY THE PERMITTING CONTRACTOR.
4. REACTION FORCES LISTED FOR USE WITH HOST STRUCTURE VERIFICATION ARE CALCULATED USING ASD METHODOLOGY. DESIGN PROFESSIONAL OF RECORD TO VERIFY APPLICABILITY AND/OR ADDITIONAL FACTORS FOR USE WITH HOST STRUCTURE VERIFICATION.
5. ALL FASTENERS TO BE #12 X ¾" OR GREATER SAE GRADE 5, UNLESS NOTED OTHERWISE, CADMIUM PLATED OR OTHERWISE CORROSION RESISTANT MATERIAL AND SHALL COMPLY WITH 5.1.1C, SPECIFICATIONS FOR ALUM. STRUCTURES -SECTION 1, THE ALUMINUM ASSOCIATION,INC., & APPLICABLE FEDERAL,STATE, AND LOCAL CODES.
6. ALL EXTRUDED MEMBERS SHALL BE ALUMINUM ALLOY TYPE 6061-T6 OR 6005-T5.
7. ALL 22GA DEFORMED STEEL STRAPS USED FOR UNIT TIE-DOWNS SHALL BE ASTM A36 MIN. STEEL. FABRICATION OF STEEL STRAPS SHALL BE BY STRAP MANUFACTURER ONLY.
8. ALL EXISTING CONCRETE SUBSTRATE SHALL HAVE MINIMUM f'c COMPRESSIVE STRENGTH OF 3000 PSI AS VERIFIED BY OTHERS.
9. ALUMINUM WELDING SHALL BE PERFORMED IN ACCORDANCE WITH 2010 FBC SECTION 2003.8.1.4 WITH WELD FILLER ALLOYS MEETING ANSI/AWS A5.10 STANDARDS TO ACHIEVE ULTIMATE DESIGN STRENGTH IN ACCORDANCE WITH THE ALUMINUM DESIGN MANUAL PART I-A, TABLE 7.3.1. SUGGESTED WELD FILLER: 5356 ELECTRODES. ALL ALUMINUM CONSTRUCTION SHALL BE IN CONFORMANCE WITH THE TOLERANCES, QUALITY AND METHODS OF CONSTRUCTION AS SET FORTH IN FBC SECTION 2003.2 AND THE AMERICAN WELDING SOCIETY'S STRUCTURAL WELDING CODE-ALUMINUM (D1.2). MINIMUM WELD IS ⅛" THROAT FULL PERIMETER FILLET WELD UNLESS OTHERWISE NOTED.
10. THE CONTRACTOR IS RESPONSIBLE TO INSULATE MEMBERS FROM DISSIMILAR MATERIALS TO PREVENT ELECTROLYSIS.
11. ELECTRICAL GROUND, WHEN REQUIRED, TO BE DESIGNED & INSTALLED BY OTHERS. ALL MECHANICAL SPECIFICATIONS (CLEAR SPACE, TONNAGE, ETC.) SHALL BE AS PER MANUFACTURER RECOMMENDATIONS AND ARE THE EXPRESS RESPONSIBILITY OF THE CONTRACTOR.
12. ENGINEER SEAL AFFIXED HERETO VALIDATES STRUCTURAL DESIGN AS SHOWN ONLY. USE OF THIS SPECIFICATION BY CONTRACTOR, et. al. INDEMNIFIES & SAVES HARMLESS THIS ENGINEER FOR ALL COST & DAMAGES INCLUDING LEGAL FEES & APPELLATE FEES RESULTING FROM MATERIAL FABRICATION, SYSTEM ERECTION, CONSTRUCTION PRACTICES BEYOND THAT WHICH IS CALLED FOR BY LOCAL, STATE, & FEDERAL CODES & FROM DEVIATIONS OF THIS PLAN.
13. THE SYSTEM DETAILED HEREIN IS GENERIC AND DOES NOT PROVIDE INFORMATION FOR A SPECIFIC SITE. FOR SITE CONDITIONS DIFFERENT FROM THE CONDITIONS DETAILED HEREIN, A LICENSED ENGINEER OR REGISTERED ARCHITECT SHALL PREPARE SITE SPECIFIC DOCUMENTS FOR USE IN CONJUNCTION WITH THIS DOCUMENT.
14. EXCEPT AS EXPRESSLY PROVIDED HEREIN, NO ADDITIONAL CERTIFICATIONS OR AFFIRMATIONS ARE INTENDED.
15. AC STANDS SHALL LABELED PER MIAMI-DADE REQUIREMENTS FOR NON-MANDATORY PRODUCT APPROVALS IN ACCORDANCE WITH THE FLORIDA BUILDING CODE.

FRANK L. BENNARDO
LICENSE No. 46549
08/21/2012
STATE OF FLORIDA
PROFESSIONAL ENGINEER

FRANK L. BENNARDO, P.E.
CERT OF AUTH #9885
ENGINEERING EXPRESS
160 SW 12th AVENUE #206
DEERFIELD BEACH, FL 33442
Ph: (954) 354-0660 Fax: (954) 354-0443
WWW.ENGEXP.COM
CERT OF AUTH #9885
A. FRANK L. BENNARDO, P.E., INC. INNOVATIVE

MIAMI TECH, INC
3611 NW 74TH STREET
MIAMI, FL 33147
PHONE:(305) 693-7054 FAX:(305) 693-6125

ALUMINUM A/C STAND
HVHZ COMPLAINT

REMARKS	DRWN	CHKD	DATE
INIT ISSUE	KL	CL	01/10/07
REV. TELESCOPIC BOLTS	KL	CL	05/03/07
UPDATE PER '07 FBC	TSB	CL	09/30/08
UPDATE PER '10 FBC	CSL	TSB	05/10/12
REV. PER COMMENTS	CSL	TSB	08/16/12

THIS DOCUMENT IS THE PROPERTY OF ENGINEERING EXPRESS AND SHALL NOT BE REPRODUCED IN WHOLE OR PART WITHOUT WRITTEN CONSENT OF THE CERTIFYING ENGINEER. ALTERATIONS, ADDITIONS, HIGHLIGHTING, OR OTHER MARKINGS TO THIS DOCUMENT ARE NOT PERMITTED AND INVALIDATE OUR CERTIFICATION.

COPYRIGHT ENGINEERING EXPRESS

12-MTI-01

SCALE: NTS 04

PAGE DESCRIPTION:
COVER SHEET

08/21/2012 - 11:57am TroyB F:\01 Project Files\Miami Tech (MTI)\2012\12-MTI-01 Aluminum Telescopic Rooftop Stands\04 Revise per comments\12-MTI-01-04b AC Stand NOA.dwg

STAND COMPONENTS

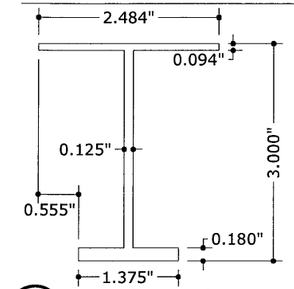

1 RAIL (I-BEAM)
6"=1'-0"

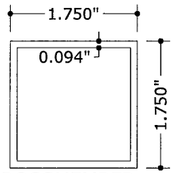

2 CROSSMEMBER OUTER TUBING
6"=1'-0"

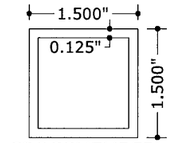

2.1 CROSSMEMBER INNER TUBING
6"=1'-0"

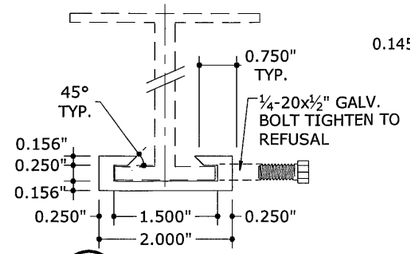

3 C-CHANNEL
6"=1'-0"

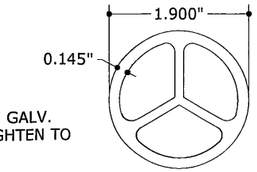

4 POST
6"=1'-0"

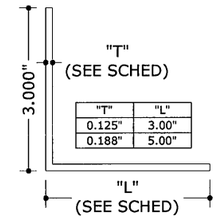

"T"	"L"
0.125"	3.00"
0.188"	5.00"

5 SUPPORT ANGLE
6"=1'-0"

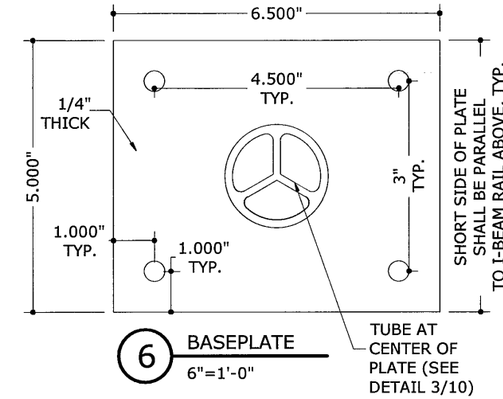

6 BASEPLATE
6"=1'-0"

MEAN UNIT HEIGHT & MAX FACE AREA CALCULATION DIRECTIVE:

THIS DIRECTIVE SHALL BE USED TO CALCULATE THE MEAN UNIT HEIGHT & MAXIMUM FACE AREA OF ANY MULTIPLE UNIT CONFIGURATION.

EXAMPLE CONFIGURATIONS:

2 UNITS:2 FRAME CONFIGURATION

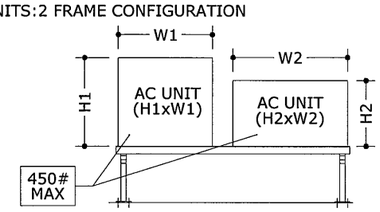

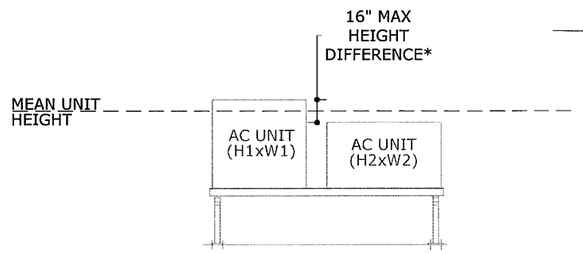

3 UNITS:3 FRAME CONFIGURATION

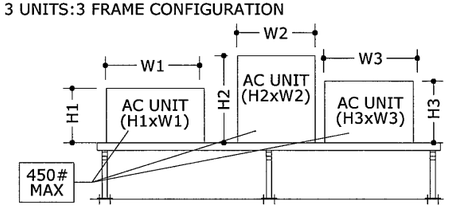

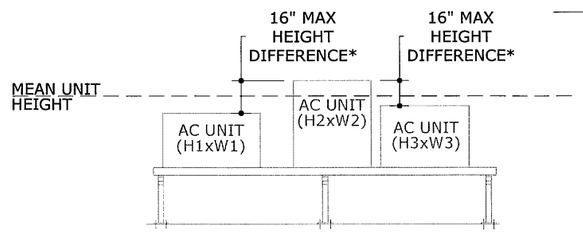

4 UNITS:4 FRAME CONFIGURATION

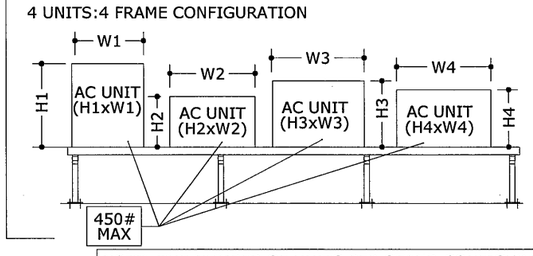

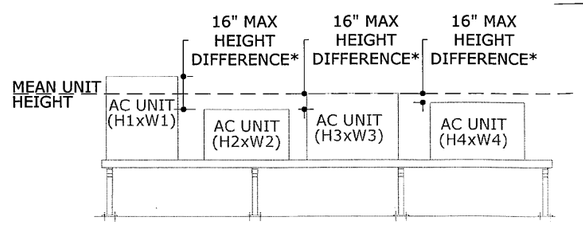

NOTE: THE NUMBER OF UNITS PER STAND CONFIGURATION MAY BE UNLIMITED PROVIDED THAT MULTIPLE UNITS CONFORM TO THE MEAN UNIT HEIGHT & MAXIMUM UNIT FACE AREA RESTRICTIONS UTILIZED IN THE DESIGN SCHEDULES.

*MAXIMUM ALLOWABLE HEIGHT DIFFERENCE BETWEEN ANY UNITS IN A MULTIPLE UNIT CONFIGURATION IS RESTRICTED TO 16" MAX.

FORMULAS USED FOR DETERMINING MEAN UNIT HEIGHT & MAXIMUM UNIT FACE AREA:

1. CALCULATE THE MEAN UNIT HEIGHT BY THE FOLLOWING EQUATION:
   - TWO UNITS: $\frac{H1+H2}{2}$
   - THREE UNITS: $\frac{H1+H2+H3}{3}$
   - FOUR UNITS: $\frac{H1+H2+H3+H4}{4}$
   - "n" UNITS: $\frac{H1+H2+H3+...Hn}{n}$
2. CALCULATE THE MAXIMUM UNIT FACE AREA BY THE FOLLOWING EQUATION:
   - TWO UNITS: (H1xW1)+(H2xW2)
   - THREE UNITS: (H1xW1)+(H2xW2)+(H3xW3)
   - FOUR UNITS: (H1xW1)+(H2xW2)+(H3xW3)+(H4xW4)
   - "n" UNITS: (H1xW1)+...(HnxWn)

PRODUCT REVISED
as complying with the Florida Building Code
Acceptance No 12-0612.29
Expiration Date 01/13/2014
By _____
Miami Dade Product Control

EXAMPLE SCENARIO:

1. CONSIDER A FOUR UNIT CONFIGURATION WITH THE DIMENSIONS AS SHOWN BELOW.
2. CALCULATE THE MEAN UNIT HEIGHT.
   - FOUR UNITS: $\frac{H1+H2+H3+H4}{4} = \frac{20"+29"+22"+25"}{4} =$ **24" MEAN UNIT HEIGHT**
3. CALCULATE THE MAXIMUM FACE AREA.
   - FOUR UNITS: (H1xW1)+(H2xW2)+(H3xW3)+(H4xW4) = (20"x21")+(29"x25")+(22"x22")+(25"x27")

   = **2304 in²**

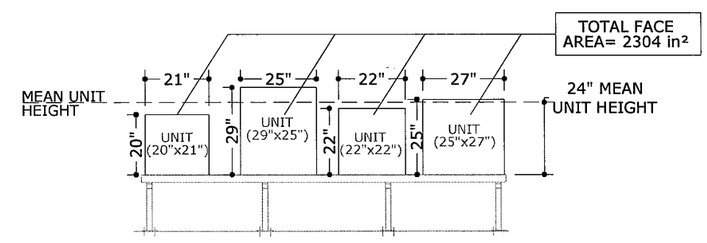

FRANK L. BENNARDO, P.E.
LICENSE No 46549
08/21/2012
STATE OF FLORIDA
PROFESSIONAL ENGINEER
ENGINEERING EXPRESS®
160 SW 12th AVENUE, #206
DEERFIELD BEACH, FL 33442
Ph: (954) 354-0660 Fax: (954) 354-3443
WWW.ENGEXP.COM
CERT OF AUTH #9885
A. FRANK L. BENNARDO, P.E., INC. INDIVIDUAL

MIAMI TECH, INC
3611 NW 74TH STREET
MIAMI, FL 33147
PHONE:(305) 693-7054 FAX:(305) 693-6125

ALUMINUM A/C STAND
HVHZ COMPLAINT

REMARKS	DRWN	CHKD	DATE
INIT ISSUE	KL	CL	01/10/07
REV. TELESCOPIC BOLTS	KL	CL	05/03/07
UPDATE PER '07 FBC	TSB	CL	09/30/08
UPDATE PER '10 FBC	CSL	TSB	05/10/12
REV. PER COMMENTS	CSL	TSB	08/16/12

THIS DOCUMENT IS THE PROPERTY OF ENGINEERING EXPRESS AND SHALL NOT BE REPRODUCED IN WHOLE OR PART WITHOUT WRITTEN CONSENT OF THE CERTIFYING ENGINEER. ALTERATIONS, ADDITIONS, REPLIFTING, OR OTHER MARKINGS TO THIS DOCUMENT ARE NOT PERMITTED AND INVALIDATE OUR CERTIFICATION.

COPYRIGHT ENGINEERING EXPRESS

12-MTI-01

SCALE: NTS 04

PAGE DESCRIPTION:
COVER SHEET

2 OF 10

08/21/2012 - 11:57am TroyB F:\01 Project Files\Miami Tech (MTI)\2012\12-MTI-01 Aluminum Telescopic Rooftop Stands\04 Revise per comments\12-MTI-01-04b AC Stand NOA.dwg

STD 20" STAND DEPTH: MAX FACE AREA (2880in^2 - 8820in^2), FRAME QUANTITY (5-8 FRAMES)

STAND HEIGHT	MAX MEAN UNIT HEIGHT	MAX FACE AREA	UNIT TO FRAME RATIO																LOAD TRANSFER INFORMATION FOR USE WITH HOST STRUCTURE VERIFICATION ONLY			
			MAX FACE AREA : 8 FRAMES				MAX FACE AREA : 7 FRAMES				MAX FACE AREA : 6 FRAMES				MAX FACE AREA : 5 FRAMES							
			ANCHOR TYPE: 1 OR 4		ANCHORS TYPE: 2 OR 3		ANCHOR TYPE: 1 OR 4		ANCHORS TYPE: 2 OR 3		ANCHOR TYPE: 1 OR 4		ANCHORS TYPE: 2 OR 3		ANCHOR TYPE: 1 OR 4		ANCHORS TYPE: 2 OR 3					
			MAX ALLOWABLE LATERAL LOAD	MAX ALLOWABLE UPLIFT	MAX ALLOWABLE LATERAL LOAD	MAX ALLOWABLE UPLIFT	MAX ALLOWABLE LATERAL LOAD	MAX ALLOWABLE UPLIFT	MAX ALLOWABLE LATERAL LOAD	MAX ALLOWABLE UPLIFT	MAX ALLOWABLE LATERAL LOAD	MAX ALLOWABLE UPLIFT	MAX ALLOWABLE LATERAL LOAD	MAX ALLOWABLE UPLIFT	MAX ALLOWABLE LATERAL LOAD	MAX ALLOWABLE UPLIFT	MAX ALLOWABLE LATERAL LOAD	MAX ALLOWABLE UPLIFT	MAX. BASE MOMENT (M)	MAX. BASE SHEAR (V)	MAX. BASE UPLIFT (T)	MAX. BASE GRAVITY (C)
18 "	24 "	2880 in^2	200.0 PSF	100.0 PSF	200.0 PSF	100.0 PSF	200.0 PSF	100.0 PSF	200.0 PSF	100.0 PSF	200.0 PSF	100.0 PSF	200.0 PSF	100.0 PSF	184.0 PSF	92.0 PSF	184.0 PSF	92.0 PSF	339.10 LB-FT	368.0 LB	1376.0 LB	1165.5 LB
24 "			200.0 PSF	100.0 PSF	200.0 PSF	100.0 PSF	182.1 PSF	91.0 PSF	182.1 PSF	91.0 PSF	156.1 PSF	78.0 PSF	156.1 PSF	78.0 PSF	130.1 PSF	65.0 PSF	130.1 PSF	65.0 PSF	307.50 LB-FT	260.2 LB	1129.0 LB	1019.8 LB
30 "			160.4 PSF	80.2 PSF	160.4 PSF	80.2 PSF	140.4 PSF	70.2 PSF	140.4 PSF	70.2 PSF	120.3 PSF	60.1 PSF	120.3 PSF	60.1 PSF	100.3 PSF	50.1 PSF	100.3 PSF	50.1 PSF	288.60 LB-FT	200.6 LB	989.0 LB	937.4 LB
18 "	30 "	4500 in^2	150.6 PSF	75.3 PSF	150.6 PSF	75.3 PSF	150.6 PSF	75.3 PSF	150.6 PSF	75.3 PSF	141.3 PSF	70.6 PSF	141.3 PSF	70.6 PSF	117.7 PSF	58.8 PSF	117.7 PSF	58.8 PSF	339.10 LB-FT	368.0 LB	1490.2 LB	1275.9 LB
24 "			133.2 PSF	66.6 PSF	133.2 PSF	66.6 PSF	116.5 PSF	58.2 PSF	116.5 PSF	58.2 PSF	99.9 PSF	49.9 PSF	99.9 PSF	49.9 PSF	83.2 PSF	41.6 PSF	83.2 PSF	41.6 PSF	307.50 LB-FT	260.2 LB	1209.1 LB	1097.9 LB
30 "			102.7 PSF	51.3 PSF	102.7 PSF	51.3 PSF	89.8 PSF	44.9 PSF	89.8 PSF	44.9 PSF	77.0 PSF	38.5 PSF	77.0 PSF	38.5 PSF	64.1 PSF	32.0 PSF	64.1 PSF	32.0 PSF	288.60 LB-FT	200.6 LB	1049.2 LB	997.6 LB
18 "	36 "	6480 in^2	94.6 PSF	47.3 PSF	94.6 PSF	47.3 PSF	94.6 PSF	47.3 PSF	94.6 PSF	47.3 PSF	94.6 PSF	47.3 PSF	94.6 PSF	47.3 PSF	81.7 PSF	40.8 PSF	81.7 PSF	40.8 PSF	339.10 LB-FT	368.0 LB	1596.8 LB	1386.3 LB
24 "			92.5 PSF	46.2 PSF	92.5 PSF	46.2 PSF	80.9 PSF	40.4 PSF	80.9 PSF	40.4 PSF	69.3 PSF	34.6 PSF	69.3 PSF	34.6 PSF	57.8 PSF	28.9 PSF	57.8 PSF	28.9 PSF	307.50 LB-FT	260.2 LB	1287.1 LB	1175.9 LB
30 "			71.3 PSF	35.6 PSF	71.3 PSF	35.6 PSF	62.4 PSF	31.2 PSF	62.4 PSF	31.2 PSF	53.4 PSF	26.7 PSF	53.4 PSF	26.7 PSF	44.5 PSF	22.2 PSF	44.5 PSF	22.2 PSF	288.60 LB-FT	200.6 LB	1109.4 LB	1057.8 LB
18 "	42 "	8820 in^2	63.4 PSF	31.7 PSF	63.4 PSF	31.7 PSF	63.4 PSF	31.7 PSF	63.4 PSF	31.7 PSF	63.4 PSF	31.7 PSF	63.4 PSF	31.7 PSF	60.0 PSF	30.0 PSF	60.0 PSF	30.0 PSF	339.10 LB-FT	368.0 LB	1707.2 LB	1496.7 LB
24 "			63.4 PSF	31.7 PSF	63.4 PSF	31.7 PSF	59.4 PSF	29.7 PSF	59.4 PSF	29.7 PSF	50.9 PSF	25.4 PSF	50.9 PSF	25.4 PSF	42.4 PSF	21.2 PSF	42.4 PSF	21.2 PSF	307.50 LB-FT	260.2 LB	1363.2 LB	1254.0 LB
30 "			52.4 PSF	26.2 PSF	52.4 PSF	26.2 PSF	45.8 PSF	22.9 PSF	45.8 PSF	22.9 PSF	39.3 PSF	19.6 PSF	39.3 PSF	19.6 PSF	32.7 PSF	16.3 PSF	32.7 PSF	16.3 PSF	288.60 LB-FT	200.6 LB	1169.6 LB	1118.0 LB

STD 20" STAND DEPTH: MAX FACE AREA (2304in^2 - 7056in^2), FRAME QUANTITY (4-7 FRAMES)

STAND HEIGHT	MAX MEAN UNIT HEIGHT	MAX FACE AREA	UNIT TO FRAME RATIO																LOAD TRANSFER INFORMATION FOR USE WITH HOST STRUCTURE VERIFICATION ONLY			
			MAX FACE AREA : 7 FRAMES				MAX FACE AREA : 6 FRAMES				MAX FACE AREA : 5 FRAMES				MAX FACE AREA : 4 FRAMES							
			ANCHOR TYPE: 1 OR 4		ANCHORS TYPE: 2 OR 3		ANCHOR TYPE: 1 OR 4		ANCHORS TYPE: 2 OR 3		ANCHOR TYPE: 1 OR 4		ANCHORS TYPE: 2 OR 3		ANCHOR TYPE: 1 OR 4		ANCHORS TYPE: 2 OR 3					
			MAX ALLOWABLE LATERAL LOAD	MAX ALLOWABLE UPLIFT	MAX ALLOWABLE LATERAL LOAD	MAX ALLOWABLE UPLIFT	MAX ALLOWABLE LATERAL LOAD	MAX ALLOWABLE UPLIFT	MAX ALLOWABLE LATERAL LOAD	MAX ALLOWABLE UPLIFT	MAX ALLOWABLE LATERAL LOAD	MAX ALLOWABLE UPLIFT	MAX ALLOWABLE LATERAL LOAD	MAX ALLOWABLE UPLIFT	MAX ALLOWABLE LATERAL LOAD	MAX ALLOWABLE UPLIFT	MAX ALLOWABLE LATERAL LOAD	MAX ALLOWABLE UPLIFT	MAX. BASE MOMENT (M)	MAX. BASE SHEAR (V)	MAX. BASE UPLIFT (T)	MAX. BASE GRAVITY (C)
18 "	24 "	2304 in^2	200.0 PSF	100.0 PSF	200.0 PSF	100.0 PSF	200.0 PSF	100.0 PSF	200.0 PSF	100.0 PSF	200.0 PSF	100.0 PSF	200.0 PSF	100.0 PSF	184.0 PSF	92.0 PSF	184.0 PSF	92.0 PSF	339.10 LB-FT	368.0 LB	1376.0 LB	1165.5 LB
24 "			200.0 PSF	100.0 PSF	200.0 PSF	100.0 PSF	195.1 PSF	97.5 PSF	195.1 PSF	97.5 PSF	162.6 PSF	81.3 PSF	162.6 PSF	81.3 PSF	130.1 PSF	65.0 PSF	130.1 PSF	65.0 PSF	307.50 LB-FT	260.2 LB	1130.0 LB	1019.8 LB
30 "			175.5 PSF	87.7 PSF	175.5 PSF	87.7 PSF	150.4 PSF	75.2 PSF	150.4 PSF	75.2 PSF	125.3 PSF	62.6 PSF	125.3 PSF	62.6 PSF	100.3 PSF	50.1 PSF	100.3 PSF	50.1 PSF	288.60 LB-FT	200.6 LB	990.2 LB	937.4 LB
18 "	30 "	3600 in^2	150.6 PSF	75.3 PSF	150.6 PSF	75.3 PSF	150.6 PSF	75.3 PSF	150.6 PSF	75.3 PSF	147.2 PSF	73.6 PSF	147.2 PSF	73.6 PSF	117.7 PSF	58.8 PSF	117.7 PSF	58.8 PSF	339.10 LB-FT	368.0 LB	1490.9 LB	1275.9 LB
24 "			145.7 PSF	72.8 PSF	145.7 PSF	72.8 PSF	124.9 PSF	62.4 PSF	124.9 PSF	62.4 PSF	104.0 PSF	52.0 PSF	104.0 PSF	52.0 PSF	83.2 PSF	41.6 PSF	83.2 PSF	41.6 PSF	307.50 LB-FT	260.2 LB	1210.3 LB	1097.9 LB
30 "			112.3 PSF	56.1 PSF	112.3 PSF	56.1 PSF	96.2 PSF	48.1 PSF	96.2 PSF	48.1 PSF	80.2 PSF	40.1 PSF	80.2 PSF	40.1 PSF	64.1 PSF	32.0 PSF	64.1 PSF	32.0 PSF	288.60 LB-FT	200.6 LB	1050.4 LB	997.6 LB
18 "	36 "	5184 in^2	94.6 PSF	47.3 PSF	94.6 PSF	47.3 PSF	94.6 PSF	47.3 PSF	94.6 PSF	47.3 PSF	94.6 PSF	47.3 PSF	94.6 PSF	47.3 PSF	81.7 PSF	40.8 PSF	81.7 PSF	40.8 PSF	339.10 LB-FT	368.0 LB	1596.8 LB	1386.3 LB
24 "			94.6 PSF	47.3 PSF	94.6 PSF	47.3 PSF	86.7 PSF	43.3 PSF	86.7 PSF	43.3 PSF	72.2 PSF	36.1 PSF	72.2 PSF	36.1 PSF	57.8 PSF	28.9 PSF	57.8 PSF	28.9 PSF	307.50 LB-FT	260.2 LB	1286.2 LB	1175.9 LB
30 "			78.0 PSF	39.0 PSF	78.0 PSF	39.0 PSF	66.8 PSF	33.4 PSF	66.8 PSF	33.4 PSF	55.7 PSF	27.8 PSF	55.7 PSF	27.8 PSF	44.5 PSF	22.2 PSF	44.5 PSF	22.2 PSF	288.60 LB-FT	200.6 LB	1110.6 LB	1057.8 LB
18 "	42 "	7056 in^2	63.4 PSF	31.7 PSF	63.4 PSF	31.7 PSF	63.4 PSF	31.7 PSF	63.4 PSF	31.7 PSF	63.4 PSF	31.7 PSF	63.4 PSF	31.7 PSF	60.0 PSF	30.0 PSF	60.0 PSF	30.0 PSF	339.10 LB-FT	368.0 LB	1707.2 LB	1496.7 LB
24 "			63.4 PSF	31.7 PSF	63.4 PSF	31.7 PSF	63.4 PSF	31.7 PSF	63.4 PSF	31.7 PSF	53.1 PSF	26.5 PSF	53.1 PSF	26.5 PSF	42.4 PSF	21.2 PSF	42.4 PSF	21.2 PSF	307.50 LB-FT	260.2 LB	1361.3 LB	1254.0 LB
30 "			57.3 PSF	28.6 PSF	57.3 PSF	28.6 PSF	49.1 PSF	24.5 PSF	49.1 PSF	24.5 PSF	40.9 PSF	20.4 PSF	40.9 PSF	20.4 PSF	32.7 PSF	16.3 PSF	32.7 PSF	16.3 PSF	288.60 LB-FT	200.6 LB	1170.8 LB	1118.0 LB

STAND DIRECTIVE EXAMPLE

(THE FOLLOWING EXAMPLE ILLUSTRATES THE PROCEDURE USED TO DETERMINE THE MAXIMUM ALLOWABLE WIND PRESSURE & UPLIFT FOR ANY GIVEN MECHANICAL UNIT CONFIGURATION THAT CONFORMS TO THE DIMENSION RESTRICTIONS LISTED HEREIN. SEE SHEET 2 FOR MEAN UNIT HEIGHT & MAXIMUM FACE AREA CALCULATION DIRECTIVE. SEE SHEET 2 FOR COMPONENT SCHEDULE. SEE SHEET 9 FOR ANCHOR SCHEDULES.)

MECHANICAL UNIT/STAND CRITERIA:

CONSIDER THE INSTALLATION OF (4) MECHANICAL UNITS, (1)-20" TALL x 24" DEEP x 21" WIDE, (1)-29" TALL x 24" DEEP x 25" WIDE,(1)-22" TALL x 24" DEEP x 22" WIDE, (1)-25" TALL x 27" DEEP x 27" WIDE, [350 LB MAX WEIGHT AS VERIFIED BY OTHERS] INSTALLED WITH THE FOLLOWING CRITERIA:

- NUMBER OF LEG FRAMES= (4) FRAMES
- STAND HEIGHT= 30" HEIGHT
- STAND DEPTH= 20" STAND DEPTH SPREAD
- HOST STRUCTURE TYPE= 3,000 PSI CONCRETE (AS VERIFIED BY OTHERS).

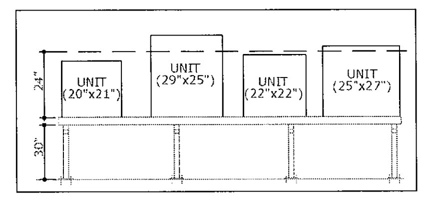

PROCEDURE:

	PROCEDURE STEP	RESULT
1	DETERMINE THE MEAN UNIT HEIGHT FOR THE GIVEN CONFIGURATION	SEE SHEET 2, CALCULATION DIRECTIVE STEP #1 FOR METHOD OF CALCULATING THE MEAN UNIT HEIGHT. FOR CLARIFICATION, THIS CONFIGURATION HAS BEEN WORKED OUT IN THE EXAMPLE SCENARIO. **(MEAN UNIT HEIGHT = 24 in)**
2	DETERMINE THE MAXIMUM FACE AREA FOR THE GIVEN CONFIGURATION	SEE SHEET 2, CALCULATION DIRECTIVE STEP #2 FOR METHOD OF CALCULATING THE MAXIMUM TOTAL UNIT FACE AREA. FOR CLARIFICATION, THIS CONFIGURATION HAS BEEN WORKED OUT IN THE EXAMPLE SCENARIO. **(MAXIMUM UNIT FACE AREA = 2304 in^2)**
3	LOCATE DESIGN SCHEDULE THAT APPLIES TO THE GIVEN CONFIGURATION	SEE SHEET 3 FOR THE 20" STAND DEPTH WITH A MAXIMUM FACE AREA OF 2304 in^2.
4	DETERMINE THE MAXIMUM ALLOWABLE LATERAL & UPLIFT WIND LOADS	FOR A 2304 in^2 MAX TOTAL UNIT FACE AREA ON A 30" STAND HEIGHT WITH (4) SUPPORTING FRAMES, THE ALLOWABLE WIND LOADS ARE AS FOLLOWS: • ALLOWABLE LATERAL WIND LOAD: **100.3 PSF** • ALLOWABLE UPLIFT WIND LOAD: **50.1 PSF**
5	INSTALL STAND PER PERMISSIBLE ANCHOR TYPES AND VERIFY HOST STRUCTURE TYPE	UTILIZE ANCHOR TYPES FROM DESIGN SCHEDULE ASSOCIATED WITH THE ALLOWABLE WIND VALUES DETERMINED IN STEP 4. FOR THE TABLE LISTING, **ANCHOR TYPES 2 & 3 MAY BE APPLIED**. FOR THIS EXAMPLE UTILIZE ANCHOR TYPE 2 FOR CONCRETE HOST STRUCTURE TYPE. INSTALL STANDS PER ANCHOR SCHEDULE AND DETAILS AS ILLUSTRATED ON SHEET 9.

CONCLUSION:

6	MAXIMUM ALLOWABLE LATERAL DESIGN PRESSURE= MAXIMUM ALLOWABLE UPLIFT DESIGN PRESSURE=	= 100.3PSF = 50.1PSF
7	COMPARE TO SITE SPECIFIC DESIGN CONDITIONS	*COMPARE VALUES FROM STEP #6 TO THE SEPARATE SITE SPECIFIC REQUIRED DESIGN WIND PRESSURE PROVIDED BY A LICENSED ENGINEER OR REGISTERED ARCHITECT; NOT INCLUDED IN THIS CERTIFICATION. SITE-SPECIFIC PRESSURE REQUIREMENTS SHALL BE LESS THAN OR EQUAL TO THE LATERAL AND UPLIFT DESIGN PRESSURE ALLOWABLE CAPACITY VALUES LISTED.*

DESIGN SCHEDULE NOTES:

1. MAXIMUM CALCULATED FACE AREA SHALL BE EQUAL TO OR LESS THAN THE MAXIMUM ALLOWABLE FACE AREA FOR EACH CONFIGURATION.
2. REFERENCE ANCHOR SCHEDULE FOR ANCHOR TYPES LISTED HEREIN.

TABLE LEGEND:
(oval) -DENOTES EXAMPLE VALUE FOR USE WITH COVER PAGE DIRECTIVE

PRODUCT REVISED as complying with the Florida Building Code Acceptance No 12-0612.29 Expiration Date 01/15/2014 By [signature] Miami Dade Product Control

FRANK L. BENNARDO # PE0046549
FRANK L. BENNARDO LICENSE No. 46549 08/21/2012 STATE OF FLORIDA PROFESSIONAL ENGINEER
ENGINEERING EXPRESS
160 SW 12th AVENUE, #106 DEERFIELD BEACH, FL 33442
PH: (954) 354-0660 FAX: (954) 354-0443
WWW.ENGEXP.COM
CERT OF AUTH #9885
A FRANK L. BENNARDO, P.E., INC.

MIAMI TECH, INC
3611 NW 74TH STREET
MIAMI, FL 33147
PHONE:(305) 693-7054 FAX:(305) 693-6125

ALUMINUM A/C STAND
HVHZ COMPLAINT

REMARKS	DRWN	CHKD	DATE
INIT ISSUE	KL	CL	01/10/07
REV. TELESCOPIC BOLTS	KL	CL	05/03/07
UPDATE PER '07 FBC	TSB	CL	09/30/08
UPDATE PER '10 FBC	CSL	TSB	05/10/12
REV. PER COMMENTS	CSL	TSB	08/16/12

THIS DOCUMENT IS THE PROPERTY OF ENGINEERING EXPRESS AND SHALL NOT BE REPRODUCED IN WHOLE OR PART WITHOUT WRITTEN CONSENT OF THE CERTIFYING ENGINEER. ALTERATIONS, ADDITIONS, HIGHLIGHTING, OR OTHER MARKINGS TO THIS DOCUMENT ARE NOT PERMITTED AND INVALIDATE OUR CERTIFICATION.
COPYRIGHT ENGINEERING EXPRESS

12-MTI-01
SCALE: NTS 04
PAGE DESCRIPTION:
COVER SHEET

F:\01 Project Files\Miami Tech (MTI)\2012\12-MTI-01 Aluminum Telescopic Rooftop Stands\04 Revise per comments\12-MTI-01-04b AC Stand NOA.dwg
08/21/2012 - 11:57am TroyB

"STD" STAND DESIGN SCHEDULE CONTINUED

STD 20" STAND DEPTH: MAX FACE AREA (1728in² - 5292in²), FRAME QUANTITY (3-6 FRAMES)

STAND HEIGHT	MAX MEAN UNIT HEIGHT	MAX FACE AREA	UNIT TO FRAME RATIO																LOAD TRANSFER INFORMATION FOR USE WITH HOST STRUCTURE VERIFICATION ONLY			
			MAX FACE AREA : 6 FRAMES				MAX FACE AREA : 5 FRAMES				MAX FACE AREA : 4 FRAMES				MAX FACE AREA : 3 FRAMES							
			ANCHOR TYPE: 1 OR 4		ANCHORS TYPE: 2 OR 3		ANCHOR TYPE: 1 OR 4		ANCHORS TYPE: 2 OR 3		ANCHOR TYPE: 1 OR 4		ANCHORS TYPE: 2 OR 3		ANCHOR TYPE: 1 OR 4		ANCHORS TYPE: 2 OR 3					
			MAX ALLOWABLE LATERAL LOAD	MAX ALLOWABLE UPLIFT	MAX ALLOWABLE LATERAL LOAD	MAX ALLOWABLE UPLIFT	MAX ALLOWABLE LATERAL LOAD	MAX ALLOWABLE UPLIFT	MAX ALLOWABLE LATERAL LOAD	MAX ALLOWABLE UPLIFT	MAX ALLOWABLE LATERAL LOAD	MAX ALLOWABLE UPLIFT	MAX ALLOWABLE LATERAL LOAD	MAX ALLOWABLE UPLIFT	MAX ALLOWABLE LATERAL LOAD	MAX ALLOWABLE UPLIFT	MAX ALLOWABLE LATERAL LOAD	MAX ALLOWABLE UPLIFT	MAX. BASE MOMENT (M)	MAX. BASE SHEAR (V)	MAX. BASE UPLIFT (T)	MAX. BASE GRAVITY (C)
18 "	24 "	1728 in²	200.0 PSF	100.0 PSF	200.0 PSF	100.0 PSF	200.0 PSF	100.0 PSF	200.0 PSF	100.0 PSF	200.0 PSF	100.0 PSF	200.0 PSF	100.0 PSF	184.0 PSF	92.0 PSF	184.0 PSF	92.0 PSF	339.10 LB-FT	368.0 LB	1376.0 LB	1165.5 LB
24 "			200.0 PSF	100.0 PSF	200.0 PSF	100.0 PSF	200.0 PSF	100.0 PSF	200.0 PSF	100.0 PSF	173.4 PSF	86.7 PSF	173.4 PSF	86.7 PSF	130.1 PSF	65.0 PSF	130.1 PSF	65.0 PSF	307.50 LB-FT	260.2 LB	1128.2 LB	1019.8 LB
30 "			200.0 PSF	100.0 PSF	200.0 PSF	100.0 PSF	167.1 PSF	83.5 PSF	167.1 PSF	83.5 PSF	133.7 PSF	66.8 PSF	133.7 PSF	66.8 PSF	100.3 PSF	50.1 PSF	100.3 PSF	50.1 PSF	288.60 LB-FT	200.6 LB	989.6 LB	937.4 LB
18 "	30 "	2700 in²	150.6 PSF	75.3 PSF	150.6 PSF	75.3 PSF	150.6 PSF	75.3 PSF	150.6 PSF	75.3 PSF	150.6 PSF	75.3 PSF	150.6 PSF	75.3 PSF	117.7 PSF	58.8 PSF	117.7 PSF	58.8 PSF	339.10 LB-FT	368.0 LB	1486.4 LB	1275.9 LB
24 "			150.6 PSF	75.3 PSF	150.6 PSF	75.3 PSF	138.7 PSF	69.3 PSF	138.7 PSF	69.3 PSF	111.0 PSF	55.5 PSF	111.0 PSF	55.5 PSF	83.2 PSF	41.6 PSF	83.2 PSF	41.6 PSF	307.50 LB-FT	260.2 LB	1209.6 LB	1097.9 LB
30 "			128.3 PSF	64.1 PSF	128.3 PSF	64.1 PSF	106.9 PSF	53.4 PSF	106.9 PSF	53.4 PSF	85.5 PSF	42.7 PSF	85.5 PSF	42.7 PSF	64.1 PSF	32.0 PSF	64.1 PSF	32.0 PSF	288.60 LB-FT	200.6 LB	1052.0 LB	997.6 LB
18 "	36 "	3888 in²	94.6 PSF	47.3 PSF	94.6 PSF	47.3 PSF	94.6 PSF	47.3 PSF	94.6 PSF	47.3 PSF	94.6 PSF	47.3 PSF	94.6 PSF	47.3 PSF	81.7 PSF	40.8 PSF	81.7 PSF	40.8 PSF	339.10 LB-FT	368.0 LB	1596.8 LB	1386.3 LB
24 "			94.6 PSF	47.3 PSF	94.6 PSF	47.3 PSF	94.6 PSF	47.3 PSF	94.6 PSF	47.3 PSF	77.1 PSF	38.5 PSF	77.1 PSF	38.5 PSF	57.8 PSF	28.9 PSF	57.8 PSF	28.9 PSF	307.50 LB-FT	260.2 LB	1284.3 LB	1175.9 LB
30 "			89.1 PSF	44.5 PSF	89.1 PSF	44.5 PSF	74.3 PSF	37.1 PSF	74.3 PSF	37.1 PSF	59.4 PSF	29.7 PSF	59.4 PSF	29.7 PSF	44.5 PSF	22.2 PSF	44.5 PSF	22.2 PSF	288.60 LB-FT	200.6 LB	1112.2 LB	1057.8 LB
18 "	42 "	5292 in²	63.4 PSF	31.7 PSF	63.4 PSF	31.7 PSF	63.4 PSF	31.7 PSF	63.4 PSF	31.7 PSF	63.4 PSF	31.7 PSF	63.4 PSF	31.7 PSF	60.0 PSF	30.0 PSF	60.0 PSF	30.0 PSF	339.10 LB-FT	368.0 LB	1707.2 LB	1496.7 LB
24 "			63.4 PSF	31.7 PSF	63.4 PSF	31.7 PSF	63.4 PSF	31.7 PSF	63.4 PSF	31.7 PSF	56.6 PSF	28.3 PSF	56.6 PSF	28.3 PSF	42.4 PSF	21.2 PSF	42.4 PSF	21.2 PSF	307.50 LB-FT	260.2 LB	1362.4 LB	1254.0 LB
30 "			63.4 PSF	31.7 PSF	63.4 PSF	31.7 PSF	54.5 PSF	27.2 PSF	54.5 PSF	27.2 PSF	43.6 PSF	21.8 PSF	43.6 PSF	21.8 PSF	32.7 PSF	16.3 PSF	32.7 PSF	16.3 PSF	288.60 LB-FT	200.6 LB	1170.1 LB	1118.0 LB

STD 20" STAND DEPTH: MAX FACE AREA (1152in² - 3528in²), FRAME QUANTITY (2-5 FRAMES)

STAND HEIGHT	MAX MEAN UNIT HEIGHT	MAX FACE AREA	UNIT TO FRAME RATIO																LOAD TRANSFER INFORMATION FOR USE WITH HOST STRUCTURE VERIFICATION ONLY			
			MAX FACE AREA : 5 FRAMES				MAX FACE AREA : 4 FRAMES				MAX FACE AREA : 3 FRAMES				MAX FACE AREA : 2 FRAMES							
			ANCHOR TYPE: 1 OR 4		ANCHORS TYPE: 2 OR 3		ANCHOR TYPE: 1 OR 4		ANCHORS TYPE: 2 OR 3		ANCHOR TYPE: 1 OR 4		ANCHORS TYPE: 2 OR 3		ANCHOR TYPE: 1 OR 4		ANCHORS TYPE: 2 OR 3					
			MAX ALLOWABLE LATERAL LOAD	MAX ALLOWABLE UPLIFT	MAX ALLOWABLE LATERAL LOAD	MAX ALLOWABLE UPLIFT	MAX ALLOWABLE LATERAL LOAD	MAX ALLOWABLE UPLIFT	MAX ALLOWABLE LATERAL LOAD	MAX ALLOWABLE UPLIFT	MAX ALLOWABLE LATERAL LOAD	MAX ALLOWABLE UPLIFT	MAX ALLOWABLE LATERAL LOAD	MAX ALLOWABLE UPLIFT	MAX ALLOWABLE LATERAL LOAD	MAX ALLOWABLE UPLIFT	MAX ALLOWABLE LATERAL LOAD	MAX ALLOWABLE UPLIFT	MAX. BASE MOMENT (M)	MAX. BASE SHEAR (V)	MAX. BASE UPLIFT (T)	MAX. BASE GRAVITY (C)
18 "	24 "	1152 in²	200.0 PSF	100.0 PSF	200.0 PSF	100.0 PSF	200.0 PSF	100.0 PSF	200.0 PSF	100.0 PSF	200.0 PSF	100.0 PSF	200.0 PSF	100.0 PSF	184.0 PSF	92.0 PSF	184.0 PSF	92.0 PSF	339.10 LB-FT	368.0 LB	1376.0 LB	1165.5 LB
24 "			200.0 PSF	100.0 PSF	200.0 PSF	100.0 PSF	200.0 PSF	100.0 PSF	200.0 PSF	100.0 PSF	195.1 PSF	97.5 PSF	195.1 PSF	97.5 PSF	130.1 PSF	65.0 PSF	130.1 PSF	65.0 PSF	307.50 LB-FT	260.2 LB	1130.0 LB	1019.8 LB
30 "			200.0 PSF	100.0 PSF	200.0 PSF	100.0 PSF	200.0 PSF	100.0 PSF	200.0 PSF	100.0 PSF	150.4 PSF	75.2 PSF	150.4 PSF	75.2 PSF	100.3 PSF	50.1 PSF	100.3 PSF	50.1 PSF	288.60 LB-FT	200.6 LB	988.7 LB	937.4 LB
18 "	30 "	1800 in²	150.6 PSF	75.3 PSF	150.6 PSF	75.3 PSF	150.6 PSF	75.3 PSF	150.6 PSF	75.3 PSF	150.6 PSF	75.3 PSF	150.6 PSF	75.3 PSF	117.7 PSF	58.8 PSF	117.7 PSF	58.8 PSF	339.10 LB-FT	368.0 LB	1486.4 LB	1275.9 LB
24 "			150.6 PSF	75.3 PSF	150.6 PSF	75.3 PSF	150.6 PSF	75.3 PSF	150.6 PSF	75.3 PSF	124.9 PSF	62.4 PSF	124.9 PSF	62.4 PSF	83.2 PSF	41.6 PSF	83.2 PSF	41.6 PSF	307.50 LB-FT	260.2 LB	1208.1 LB	1097.9 LB
30 "			150.6 PSF	75.3 PSF	150.6 PSF	75.3 PSF	128.3 PSF	64.1 PSF	128.3 PSF	64.1 PSF	96.2 PSF	48.1 PSF	96.2 PSF	48.1 PSF	64.1 PSF	32.0 PSF	64.1 PSF	32.0 PSF	288.60 LB-FT	200.6 LB	1052.0 LB	997.6 LB
18 "	36 "	2592 in²	94.6 PSF	47.3 PSF	94.6 PSF	47.3 PSF	94.6 PSF	47.3 PSF	94.6 PSF	47.3 PSF	94.6 PSF	47.3 PSF	94.6 PSF	47.3 PSF	81.7 PSF	40.8 PSF	81.7 PSF	40.8 PSF	339.10 LB-FT	368.0 LB	1596.8 LB	1386.3 LB
24 "			94.6 PSF	47.3 PSF	94.6 PSF	47.3 PSF	94.6 PSF	47.3 PSF	94.6 PSF	47.3 PSF	86.7 PSF	43.3 PSF	86.7 PSF	43.3 PSF	57.8 PSF	28.9 PSF	57.8 PSF	28.9 PSF	307.50 LB-FT	260.2 LB	1286.2 LB	1175.9 LB
30 "			94.6 PSF	47.3 PSF	94.6 PSF	47.3 PSF	89.1 PSF	44.5 PSF	89.1 PSF	44.5 PSF	66.8 PSF	33.4 PSF	66.8 PSF	33.4 PSF	44.5 PSF	22.2 PSF	44.5 PSF	22.2 PSF	288.60 LB-FT	200.6 LB	1112.2 LB	1057.8 LB
18 "	42 "	3528 in²	63.4 PSF	31.7 PSF	63.4 PSF	31.7 PSF	63.4 PSF	31.7 PSF	63.4 PSF	31.7 PSF	63.4 PSF	31.7 PSF	63.4 PSF	31.7 PSF	60.0 PSF	30.0 PSF	60.0 PSF	30.0 PSF	339.10 LB-FT	368.0 LB	1707.2 LB	1496.7 LB
24 "			63.4 PSF	31.7 PSF	63.4 PSF	31.7 PSF	63.4 PSF	31.7 PSF	63.4 PSF	31.7 PSF	63.4 PSF	31.7 PSF	63.4 PSF	31.7 PSF	42.4 PSF	21.2 PSF	42.4 PSF	21.2 PSF	307.50 LB-FT	260.2 LB	1358.3 LB	1254.0 LB
30 "			63.4 PSF	31.7 PSF	63.4 PSF	31.7 PSF	63.4 PSF	31.7 PSF	63.4 PSF	31.7 PSF	49.1 PSF	24.5 PSF	49.1 PSF	24.5 PSF	32.7 PSF	16.3 PSF	32.7 PSF	16.3 PSF	288.60 LB-FT	200.6 LB	1168.6 LB	1118.0 LB

STD 20" STAND DEPTH: MAX FACE AREA (576in² - 1764in²), FRAME QUANTITY (2-3 FRAMES)

STAND HEIGHT	MAX MEAN UNIT HEIGHT	MAX FACE AREA	UNIT TO FRAME RATIO								LOAD TRANSFER INFORMATION FOR USE WITH HOST STRUCTURE VERIFICATION ONLY			
			MAX FACE AREA : 3 FRAMES				MAX FACE AREA : 2 FRAMES							
			ANCHOR TYPE: 1 OR 4		ANCHOR TYPE: 2 OR 3		ANCHOR TYPE: 1 OR 4		ANCHOR TYPE: 2 OR 3					
			MAX ALLOWABLE LATERAL LOAD	MAX ALLOWABLE UPLIFT	MAX ALLOWABLE LATERAL LOAD	MAX ALLOWABLE UPLIFT	MAX ALLOWABLE LATERAL LOAD	MAX ALLOWABLE UPLIFT	MAX ALLOWABLE LATERAL LOAD	MAX ALLOWABLE UPLIFT	MAX. BASE MOMENT (M)	MAX. BASE SHEAR (V)	MAX. BASE UPLIFT (T)	MAX. BASE GRAVITY (C)
18 "	24 "	576 in²	200.0 PSF	100.0 PSF	200.0 PSF	100.0 PSF	200.0 PSF	100.0 PSF	200.0 PSF	100.0 PSF	184.30 LB-FT	200.0 LB	748.7 LB	627.5 LB
24 "			200.0 PSF	100.0 PSF	200.0 PSF	100.0 PSF	200.0 PSF	100.0 PSF	200.0 PSF	100.0 PSF	236.30 LB-FT	200.0 LB	868.7 LB	747.5 LB
30 "			200.0 PSF	100.0 PSF	200.0 PSF	100.0 PSF	200.0 PSF	100.0 PSF	200.0 PSF	100.0 PSF	287.70 LB-FT	200.0 LB	988.7 LB	867.5 LB
18 "	30 "	900 in²	150.6 PSF	75.3 PSF	150.6 PSF	75.3 PSF	150.6 PSF	75.3 PSF	150.6 PSF	75.3 PSF	216.80 LB-FT	235.3 LB	953.6 LB	797.0 LB
24 "			150.6 PSF	75.3 PSF	150.6 PSF	75.3 PSF	150.6 PSF	75.3 PSF	150.6 PSF	75.3 PSF	278.10 LB-FT	235.3 LB	1094.9 LB	938.3 LB
30 "			150.6 PSF	75.3 PSF	150.6 PSF	75.3 PSF	128.3 PSF	64.1 PSF	128.3 PSF	64.1 PSF	288.60 LB-FT	200.6 LB	1052.0 LB	930.1 LB
18 "	36 "	1296 in²	94.6 PSF	47.3 PSF	94.6 PSF	47.3 PSF	94.6 PSF	47.3 PSF	94.6 PSF	47.3 PSF	196.10 LB-FT	212.8 LB	925.4 LB	791.3 LB
24 "			94.6 PSF	47.3 PSF	94.6 PSF	47.3 PSF	94.6 PSF	47.3 PSF	94.6 PSF	47.3 PSF	251.60 LB-FT	212.8 LB	1053.2 LB	919.0 LB
30 "			94.6 PSF	47.3 PSF	94.6 PSF	47.3 PSF	89.1 PSF	44.5 PSF	89.1 PSF	44.5 PSF	288.60 LB-FT	200.6 LB	1112.2 LB	990.3 LB
18 "	42 "	1764 in²	63.4 PSF	31.7 PSF	63.4 PSF	31.7 PSF	63.4 PSF	31.7 PSF	63.4 PSF	31.7 PSF	179.00 LB-FT	194.3 LB	902.1 LB	786.5 LB
24 "			63.4 PSF	31.7 PSF	63.4 PSF	31.7 PSF	63.4 PSF	31.7 PSF	63.4 PSF	31.7 PSF	229.60 LB-FT	194.3 LB	1018.7 LB	903.1 LB
30 "			63.4 PSF	31.7 PSF	63.4 PSF	31.7 PSF	63.4 PSF	31.7 PSF	63.4 PSF	31.7 PSF	279.60 LB-FT	194.3 LB	1135.3 LB	1019.7 LB

PRODUCT REVISED
as complying with the Florida Building Code
Acceptance No 12-0612.29
Expiration Date 01/15/2014
By [signature]
Miami Dade Product Control

DESIGN SCHEDULE NOTES:

1. MAXIMUM CALCULATED FACE AREA SHALL BE EQUAL TO OR LESS THAN THE MAXIMUM ALLOWABLE FACE AREA FOR EACH CONFIGURATION.
2. REFERENCE ANCHOR SCHEDULE FOR ANCHOR TYPES LISTED HEREIN.

STD 30" STAND DEPTH: MAX FACE AREA (2880in² - 8820in²), FRAME QUANTITY (5-8 FRAMES)

STAND HEIGHT	MAX MEAN UNIT HEIGHT	MAX FACE AREA	UNIT TO FRAME RATIO																LOAD TRANSFER INFORMATION FOR USE WITH HOST STRUCTURE VERIFICATION ONLY			
			MAX FACE AREA : 8 FRAMES				MAX FACE AREA : 7 FRAMES				MAX FACE AREA : 6 FRAMES				MAX FACE AREA : 5 FRAMES							
			ANCHOR TYPE: 1 OR 4		ANCHORS TYPE: 2 OR 3		ANCHOR TYPE: 1 OR 4		ANCHORS TYPE: 2 OR 3		ANCHOR TYPE: 1 OR 4		ANCHORS TYPE: 2 OR 3		ANCHOR TYPE: 1 OR 4		ANCHORS TYPE: 2 OR 3					
			MAX ALLOWABLE LATERAL LOAD	MAX ALLOWABLE UPLIFT	MAX ALLOWABLE LATERAL LOAD	MAX ALLOWABLE UPLIFT	MAX ALLOWABLE LATERAL LOAD	MAX ALLOWABLE UPLIFT	MAX ALLOWABLE LATERAL LOAD	MAX ALLOWABLE UPLIFT	MAX ALLOWABLE LATERAL LOAD	MAX ALLOWABLE UPLIFT	MAX ALLOWABLE LATERAL LOAD	MAX ALLOWABLE UPLIFT	MAX ALLOWABLE LATERAL LOAD	MAX ALLOWABLE UPLIFT	MAX ALLOWABLE LATERAL LOAD	MAX ALLOWABLE UPLIFT	MAX. BASE MOMENT (M)	MAX. BASE SHEAR (V)	MAX. BASE UPLIFT (T)	MAX. BASE GRAVITY (C)
18 "	24 "	2880 in²	200.0 PSF	100.0 PSF	200.0 PSF	100.0 PSF	200.0 PSF	100.0 PSF	200.0 PSF	100.0 PSF	200.0 PSF	100.0 PSF	200.0 PSF	100.0 PSF	200.0 PSF	100.0 PSF	200.0 PSF	100.0 PSF	392.30 LB-FT	400.0 LB	1057.5 LB	815.0 LB
24 "			200.0 PSF	100.0 PSF	200.0 PSF	100.0 PSF	198.7 PSF	99.3 PSF	198.7 PSF	99.3 PSF	170.3 PSF	85.1 PSF	170.3 PSF	85.1 PSF	141.9 PSF	70.9 PSF	141.9 PSF	70.9 PSF	354.90 LB-FT	283.9 LB	864.0 LB	731.2 LB
30 "			172.6 PSF	86.3 PSF	172.6 PSF	86.3 PSF	151.0 PSF	75.5 PSF	151.0 PSF	75.5 PSF	129.4 PSF	64.7 PSF	129.4 PSF	64.7 PSF	107.8 PSF	53.9 PSF	107.8 PSF	53.9 PSF	326.50 LB-FT	215.7 LB	741.1 LB	674.4 LB
18 "	30 "	4500 in²	182.7 PSF	91.3 PSF	182.7 PSF	91.3 PSF	181.3 PSF	90.6 PSF	181.3 PSF	90.6 PSF	155.4 PSF	77.7 PSF	155.4 PSF	77.7 PSF	129.5 PSF	64.7 PSF	129.5 PSF	64.7 PSF	396.90 LB-FT	404.7 LB	1157.6 LB	904.0 LB
24 "			145.3 PSF	72.6 PSF	145.3 PSF	72.6 PSF	127.1 PSF	63.5 PSF	127.1 PSF	63.5 PSF	109.0 PSF	54.5 PSF	109.0 PSF	54.5 PSF	90.8 PSF	45.4 PSF	90.8 PSF	45.4 PSF	354.90 LB-FT	283.9 LB	922.8 LB	788.0 LB
30 "			110.4 PSF	55.2 PSF	110.4 PSF	55.2 PSF	96.6 PSF	48.3 PSF	96.6 PSF	48.3 PSF	82.8 PSF	41.4 PSF	82.8 PSF	41.4 PSF	69.0 PSF	34.5 PSF	69.0 PSF	34.5 PSF	326.50 LB-FT	215.7 LB	784.2 LB	717.5 LB
18 "	36 "	6480 in²	116.9 PSF	58.4 PSF	116.9 PSF	58.4 PSF	116.9 PSF	58.4 PSF	116.9 PSF	58.4 PSF	107.9 PSF	53.9 PSF	107.9 PSF	53.9 PSF	89.9 PSF	44.9 PSF	89.9 PSF	44.9 PSF	396.90 LB-FT	404.7 LB	1235.9 LB	984.9 LB
24 "			100.9 PSF	50.4 PSF	100.9 PSF	50.4 PSF	88.3 PSF	44.1 PSF	88.3 PSF	44.1 PSF	75.7 PSF	37.8 PSF	75.7 PSF	37.8 PSF	63.0 PSF	31.5 PSF	63.0 PSF	31.5 PSF	354.90 LB-FT	283.9 LB	979.6 LB	844.7 LB
30 "			76.7 PSF	38.3 PSF	76.7 PSF	38.3 PSF	67.1 PSF	33.5 PSF	67.1 PSF	33.5 PSF	57.5 PSF	28.7 PSF	57.5 PSF	28.7 PSF	47.9 PSF	23.9 PSF	47.9 PSF	23.9 PSF	326.50 LB-FT	215.7 LB	827.4 LB	760.7 LB
18 "	42 "	8820 in²	79.6 PSF	39.8 PSF	79.6 PSF	39.8 PSF	79.6 PSF	39.8 PSF	79.6 PSF	39.8 PSF	79.2 PSF	39.6 PSF	79.2 PSF	39.6 PSF	66.0 PSF	33.0 PSF	66.0 PSF	33.0 PSF	396.90 LB-FT	404.7 LB	1316.9 LB	1065.9 LB
24 "			74.1 PSF	37.0 PSF	74.1 PSF	37.0 PSF	64.8 PSF	32.4 PSF	64.8 PSF	32.4 PSF	55.6 PSF	27.8 PSF	55.6 PSF	27.8 PSF	46.3 PSF	23.1 PSF	46.3 PSF	23.1 PSF	354.90 LB-FT	283.9 LB	1036.4 LB	901.5 LB
30 "			56.3 PSF	28.1 PSF	56.3 PSF	28.1 PSF	49.3 PSF	24.6 PSF	49.3 PSF	24.6 PSF	42.2 PSF	21.1 PSF	42.2 PSF	21.1 PSF	35.2 PSF	17.6 PSF	35.2 PSF	17.6 PSF	326.50 LB-FT	215.7 LB	870.6 LB	803.8 LB

FRANK L. BENNARDO, P.E.
PE0046549
FRANK L. BENNARDO LICENSE No. 46549 08/21/2012 STATE OF FLORIDA PROFESSIONAL ENGINEER

ENGINEERING EXPRESS
160 SW 12th AVENUE
DEERFIELD BEACH, FL [illegible]
PH: (954) 354-0660 FAX: (954) [illegible]
WWW.ENGEXP.COM
CERT OF AUTH #9885
A FRANK L. BENNARDO, P.E., INC. COMPANY

MIAMI TECH, INC
3611 NW 74TH STREET
MIAMI, FL 33147
PHONE:(305) 693-7054 FAX:(305) 693-6125

ALUMINUM A/C STAND
HVHZ COMPLAINT

REMARKS	DRWN	CHKD	DATE
INIT ISSUE	KL	CL	01/10/07
REV. TELESCOPIC BOLTS	KL	CL	05/03/07
UPDATE PER '07 FBC	TSB	CL	09/30/08
UPDATE PER '10 FBC	CSL	TSB	05/10/12
REV. PER COMMENTS	CSL	TSB	08/16/12

THIS DOCUMENT IS THE PROPERTY OF ENGINEERING EXPRESS AND SHALL NOT BE REPRODUCED IN WHOLE OR PART WITHOUT WRITTEN CONSENT OF THE CERTIFYING ENGINEER. ALTERATIONS, ADDITIONS, HIGHLIGHTING, OR OTHER MARKINGS TO THIS DOCUMENT ARE NOT PERMITTED AND INVALIDATE OUR CERTIFICATION.

COPYRIGHT ENGINEERING EXPRESS

12-MTI-01

SCALE: NTS 04

PAGE DESCRIPTION: COVER SHEET

F:\01 Project Files\Miami Tech (MTI)\2012\12-MTI-01 Aluminum Telescopic Rooftop Stands\04 Revise per comments\12-MTI-01-04b AC Stand NOA.dwg
08/21/2012 - 11:58am TroyB

"STD" STAND DESIGN SCHEDULE CONTINUED

STD 30" STAND DEPTH: MAX FACE AREA (2304in² - 7056in²), FRAME QUANTITY (4-7 FRAMES)

STAND HEIGHT	MAX MEAN UNIT HEIGHT	MAX FACE AREA	UNIT TO FRAME RATIO: MAX FACE AREA : 7 FRAMES — ANCHOR TYPE: 1 OR 4 — MAX ALLOWABLE LATERAL LOAD	MAX ALLOWABLE UPLIFT	ANCHORS TYPE: 2 OR 3 — MAX ALLOWABLE LATERAL LOAD	MAX ALLOWABLE UPLIFT	MAX FACE AREA : 6 FRAMES — ANCHOR TYPE: 1 OR 4 — MAX ALLOWABLE LATERAL LOAD	MAX ALLOWABLE UPLIFT	ANCHORS TYPE: 2 OR 3 — MAX ALLOWABLE LATERAL LOAD	MAX ALLOWABLE UPLIFT	MAX FACE AREA : 5 FRAMES — ANCHOR TYPE: 1 OR 4 — MAX ALLOWABLE LATERAL LOAD	MAX ALLOWABLE UPLIFT	ANCHORS TYPE: 2 OR 3 — MAX ALLOWABLE LATERAL LOAD	MAX ALLOWABLE UPLIFT	MAX FACE AREA : 4 FRAMES — ANCHOR TYPE: 1 OR 4 — MAX ALLOWABLE LATERAL LOAD	MAX ALLOWABLE UPLIFT	ANCHORS TYPE: 2 OR 3 — MAX ALLOWABLE LATERAL LOAD	MAX ALLOWABLE UPLIFT	LOAD TRANSFER INFORMATION FOR USE WITH HOST STRUCTURE VERIFICATION ONLY — MAX. BASE MOMENT (M)	MAX. BASE SHEAR (V)	MAX. BASE UPLIFT (T)	MAX. BASE GRAVITY (C)
18 "			200.0 PSF	100.0 PSF	200.0 PSF	100.0 PSF	200.0 PSF	100.0 PSF	200.0 PSF	100.0 PSF	200.0 PSF	100.0 PSF	200.0 PSF	100.0 PSF	200.0 PSF	100.0 PSF	200.0 PSF	100.0 PSF	392.30 LB-FT	400.0 LB	1057.5 LB	815.0 LB
24 "	24 "	2304 in²	200.0 PSF	100.0 PSF	200.0 PSF	100.0 PSF	200.0 PSF	100.0 PSF	200.0 PSF	100.0 PSF	177.4 PSF	88.7 PSF	177.4 PSF	88.7 PSF	141.9 PSF	70.9 PSF	141.9 PSF	70.9 PSF	354.90 LB-FT	283.9 LB	862.1 LB	731.2 LB
30 "			188.8 PSF	94.4 PSF	188.8 PSF	94.4 PSF	161.8 PSF	80.9 PSF	161.8 PSF	80.9 PSF	134.8 PSF	67.4 PSF	134.8 PSF	67.4 PSF	107.8 PSF	53.9 PSF	107.8 PSF	53.9 PSF	326.50 LB-FT	215.7 LB	742.3 LB	674.4 LB
18 "			182.7 PSF	91.3 PSF	182.7 PSF	91.3 PSF	182.7 PSF	91.3 PSF	182.7 PSF	91.3 PSF	161.8 PSF	80.9 PSF	161.8 PSF	80.9 PSF	129.5 PSF	64.7 PSF	129.5 PSF	64.7 PSF	396.90 LB-FT	404.7 LB	1155.7 LB	904.0 LB
24 "	30 "	3600 in²	158.9 PSF	79.4 PSF	158.9 PSF	79.4 PSF	136.2 PSF	68.1 PSF	136.2 PSF	68.1 PSF	113.5 PSF	56.7 PSF	113.5 PSF	56.7 PSF	90.8 PSF	45.4 PSF	90.8 PSF	45.4 PSF	354.90 LB-FT	283.9 LB	924.0 LB	788.0 LB
30 "			120.8 PSF	60.4 PSF	120.8 PSF	60.4 PSF	103.5 PSF	51.7 PSF	103.5 PSF	51.7 PSF	86.3 PSF	43.1 PSF	86.3 PSF	43.1 PSF	69.0 PSF	34.5 PSF	69.0 PSF	34.5 PSF	326.50 LB-FT	215.7 LB	785.5 LB	717.5 LB
18 "			116.9 PSF	58.4 PSF	116.9 PSF	58.4 PSF	116.9 PSF	58.4 PSF	116.9 PSF	58.4 PSF	112.4 PSF	56.2 PSF	112.4 PSF	56.2 PSF	89.9 PSF	44.9 PSF	89.9 PSF	44.9 PSF	396.90 LB-FT	404.7 LB	1236.7 LB	984.9 LB
24 "	36 "	5184 in²	110.4 PSF	55.2 PSF	110.4 PSF	55.2 PSF	94.6 PSF	47.3 PSF	94.6 PSF	47.3 PSF	78.8 PSF	39.4 PSF	78.8 PSF	39.4 PSF	63.0 PSF	31.5 PSF	63.0 PSF	31.5 PSF	354.90 LB-FT	283.9 LB	980.8 LB	844.7 LB
30 "			83.9 PSF	41.9 PSF	83.9 PSF	41.9 PSF	71.9 PSF	35.9 PSF	71.9 PSF	35.9 PSF	59.9 PSF	29.9 PSF	59.9 PSF	29.9 PSF	47.9 PSF	23.9 PSF	47.9 PSF	23.9 PSF	326.50 LB-FT	215.7 LB	828.6 LB	760.7 LB
18 "			79.6 PSF	39.8 PSF	79.6 PSF	39.8 PSF	79.6 PSF	39.8 PSF	79.6 PSF	39.8 PSF	79.6 PSF	39.8 PSF	79.6 PSF	39.8 PSF	66.0 PSF	33.0 PSF	66.0 PSF	33.0 PSF	396.90 LB-FT	404.7 LB	1313.1 LB	1065.9 LB
24 "	42 "	7056 in²	79.6 PSF	39.8 PSF	79.6 PSF	39.8 PSF	69.5 PSF	34.7 PSF	69.5 PSF	34.7 PSF	57.9 PSF	28.9 PSF	57.9 PSF	28.9 PSF	46.3 PSF	23.1 PSF	46.3 PSF	23.1 PSF	354.90 LB-FT	283.9 LB	1035.4 LB	901.5 LB
30 "			61.6 PSF	30.8 PSF	61.6 PSF	30.8 PSF	52.8 PSF	26.4 PSF	52.8 PSF	26.4 PSF	44.0 PSF	22.0 PSF	44.0 PSF	22.0 PSF	35.2 PSF	17.6 PSF	35.2 PSF	17.6 PSF	326.50 LB-FT	215.7 LB	871.8 LB	803.8 LB

STD 30" STAND DEPTH: MAX FACE AREA (1728in² - 5292in²), FRAME QUANTITY (3-6 FRAMES)

STAND HEIGHT	MAX MEAN UNIT HEIGHT	MAX FACE AREA	UNIT TO FRAME RATIO: MAX FACE AREA : 6 FRAMES — ANCHOR TYPE: 1 OR 4 — MAX ALLOWABLE LATERAL LOAD	MAX ALLOWABLE UPLIFT	ANCHORS TYPE: 2 OR 3 — MAX ALLOWABLE LATERAL LOAD	MAX ALLOWABLE UPLIFT	MAX FACE AREA : 5 FRAMES — ANCHOR TYPE: 1 OR 4 — MAX ALLOWABLE LATERAL LOAD	MAX ALLOWABLE UPLIFT	ANCHORS TYPE: 2 OR 3 — MAX ALLOWABLE LATERAL LOAD	MAX ALLOWABLE UPLIFT	MAX FACE AREA : 4 FRAMES — ANCHOR TYPE: 1 OR 4 — MAX ALLOWABLE LATERAL LOAD	MAX ALLOWABLE UPLIFT	ANCHORS TYPE: 2 OR 3 — MAX ALLOWABLE LATERAL LOAD	MAX ALLOWABLE UPLIFT	MAX FACE AREA : 3 FRAMES — ANCHOR TYPE: 1 OR 4 — MAX ALLOWABLE LATERAL LOAD	MAX ALLOWABLE UPLIFT	ANCHORS TYPE: 2 OR 3 — MAX ALLOWABLE LATERAL LOAD	MAX ALLOWABLE UPLIFT	LOAD TRANSFER INFORMATION FOR USE WITH HOST STRUCTURE VERIFICATION ONLY — MAX. BASE MOMENT (M)	MAX. BASE SHEAR (V)	MAX. BASE UPLIFT (T)	MAX. BASE GRAVITY (C)
18 "			200.0 PSF	100.0 PSF	200.0 PSF	100.0 PSF	200.0 PSF	100.0 PSF	200.0 PSF	100.0 PSF	200.0 PSF	100.0 PSF	200.0 PSF	100.0 PSF	200.0 PSF	100.0 PSF	200.0 PSF	100.0 PSF	392.30 LB-FT	400.0 LB	1057.5 LB	815.0 LB
24 "	24 "	1728 in²	200.0 PSF	100.0 PSF	200.0 PSF	100.0 PSF	200.0 PSF	100.0 PSF	200.0 PSF	100.0 PSF	189.2 PSF	94.6 PSF	189.2 PSF	94.6 PSF	141.9 PSF	70.9 PSF	141.9 PSF	70.9 PSF	354.90 LB-FT	283.9 LB	863.2 LB	731.2 LB
30 "			200.0 PSF	100.0 PSF	200.0 PSF	100.0 PSF	179.8 PSF	89.9 PSF	179.8 PSF	89.9 PSF	143.8 PSF	71.9 PSF	143.8 PSF	71.9 PSF	107.8 PSF	53.9 PSF	107.8 PSF	53.9 PSF	326.50 LB-FT	215.7 LB	741.7 LB	674.4 LB
18 "			182.7 PSF	91.3 PSF	182.7 PSF	91.3 PSF	182.7 PSF	91.3 PSF	182.7 PSF	91.3 PSF	172.6 PSF	86.3 PSF	172.6 PSF	86.3 PSF	129.5 PSF	64.7 PSF	129.5 PSF	64.7 PSF	396.90 LB-FT	404.7 LB	1156.8 LB	904.0 LB
24 "	30 "	2700 in²	181.7 PSF	90.8 PSF	181.7 PSF	90.8 PSF	151.4 PSF	75.7 PSF	151.4 PSF	75.7 PSF	121.1 PSF	60.5 PSF	121.1 PSF	60.5 PSF	90.8 PSF	45.4 PSF	90.8 PSF	45.4 PSF	354.90 LB-FT	283.9 LB	925.6 LB	788.0 LB
30 "			138.0 PSF	69.0 PSF	138.0 PSF	69.0 PSF	115.0 PSF	57.5 PSF	115.0 PSF	57.5 PSF	92.0 PSF	46.0 PSF	92.0 PSF	46.0 PSF	69.0 PSF	34.5 PSF	69.0 PSF	34.5 PSF	326.50 LB-FT	215.7 LB	787.1 LB	717.5 LB
18 "			116.9 PSF	58.4 PSF	116.9 PSF	58.4 PSF	116.9 PSF	58.4 PSF	116.9 PSF	58.4 PSF	116.9 PSF	58.4 PSF	116.9 PSF	58.4 PSF	89.9 PSF	44.9 PSF	89.9 PSF	44.9 PSF	396.90 LB-FT	404.7 LB	1232.2 LB	984.9 LB
24 "	36 "	3888 in²	116.9 PSF	58.4 PSF	116.9 PSF	58.4 PSF	105.1 PSF	52.5 PSF	105.1 PSF	52.5 PSF	84.1 PSF	42.0 PSF	84.1 PSF	42.0 PSF	63.0 PSF	31.5 PSF	63.0 PSF	31.5 PSF	354.90 LB-FT	283.9 LB	980.2 LB	844.7 LB
30 "			95.8 PSF	47.9 PSF	95.8 PSF	47.9 PSF	79.9 PSF	39.9 PSF	79.9 PSF	39.9 PSF	63.9 PSF	31.9 PSF	63.9 PSF	31.9 PSF	47.9 PSF	23.9 PSF	47.9 PSF	23.9 PSF	326.50 LB-FT	215.7 LB	830.2 LB	760.7 LB
18 "			79.6 PSF	39.8 PSF	79.6 PSF	39.8 PSF	79.6 PSF	39.8 PSF	79.6 PSF	39.8 PSF	79.6 PSF	39.8 PSF	79.6 PSF	39.8 PSF	66.0 PSF	33.0 PSF	66.0 PSF	33.0 PSF	396.90 LB-FT	404.7 LB	1313.1 LB	1065.9 LB
24 "	42 "	5292 in²	79.6 PSF	39.8 PSF	79.6 PSF	39.8 PSF	77.2 PSF	38.6 PSF	77.2 PSF	38.6 PSF	61.8 PSF	30.9 PSF	61.8 PSF	30.9 PSF	46.3 PSF	23.1 PSF	46.3 PSF	23.1 PSF	354.90 LB-FT	283.9 LB	1036.9 LB	901.5 LB
30 "			70.4 PSF	35.2 PSF	70.4 PSF	35.2 PSF	58.7 PSF	29.3 PSF	58.7 PSF	29.3 PSF	46.9 PSF	23.4 PSF	46.9 PSF	23.4 PSF	35.2 PSF	17.6 PSF	35.2 PSF	17.6 PSF	326.50 LB-FT	215.7 LB	873.4 LB	803.8 LB

STD 30" STAND DEPTH: MAX FACE AREA (1152in² - 3528in²), FRAME QUANTITY (2-5 FRAMES)

STAND HEIGHT	MAX MEAN UNIT HEIGHT	MAX FACE AREA	UNIT TO FRAME RATIO: MAX FACE AREA : 5 FRAMES — ANCHOR TYPE: 1 OR 4 — MAX ALLOWABLE LATERAL LOAD	MAX ALLOWABLE UPLIFT	ANCHORS TYPE: 2 OR 3 — MAX ALLOWABLE LATERAL LOAD	MAX ALLOWABLE UPLIFT	MAX FACE AREA : 4 FRAMES — ANCHOR TYPE: 1 OR 4 — MAX ALLOWABLE LATERAL LOAD	MAX ALLOWABLE UPLIFT	ANCHORS TYPE: 2 OR 3 — MAX ALLOWABLE LATERAL LOAD	MAX ALLOWABLE UPLIFT	MAX FACE AREA : 3 FRAMES — ANCHOR TYPE: 1 OR 4 — MAX ALLOWABLE LATERAL LOAD	MAX ALLOWABLE UPLIFT	ANCHORS TYPE: 2 OR 3 — MAX ALLOWABLE LATERAL LOAD	MAX ALLOWABLE UPLIFT	MAX FACE AREA : 2 FRAMES — ANCHOR TYPE: 1 OR 4 — MAX ALLOWABLE LATERAL LOAD	MAX ALLOWABLE UPLIFT	ANCHORS TYPE: 2 OR 3 — MAX ALLOWABLE LATERAL LOAD	MAX ALLOWABLE UPLIFT	LOAD TRANSFER INFORMATION FOR USE WITH HOST STRUCTURE VERIFICATION ONLY — MAX. BASE MOMENT (M)	MAX. BASE SHEAR (V)	MAX. BASE UPLIFT (T)	MAX. BASE GRAVITY (C)
18 "			200.0 PSF	100.0 PSF	200.0 PSF	100.0 PSF	200.0 PSF	100.0 PSF	200.0 PSF	100.0 PSF	200.0 PSF	100.0 PSF	200.0 PSF	100.0 PSF	200.0 PSF	100.0 PSF	200.0 PSF	100.0 PSF	392.30 LB-FT	400.0 LB	1057.5 LB	815.0 LB
24 "	24 "	1152 in²	200.0 PSF	100.0 PSF	200.0 PSF	100.0 PSF	200.0 PSF	100.0 PSF	200.0 PSF	100.0 PSF	200.0 PSF	100.0 PSF	200.0 PSF	100.0 PSF	141.9 PSF	70.9 PSF	141.9 PSF	70.9 PSF	354.90 LB-FT	283.9 LB	857.6 LB	731.2 LB
30 "			200.0 PSF	100.0 PSF	200.0 PSF	100.0 PSF	200.0 PSF	100.0 PSF	200.0 PSF	100.0 PSF	161.8 PSF	80.9 PSF	161.8 PSF	80.9 PSF	107.8 PSF	53.9 PSF	107.8 PSF	53.9 PSF	326.50 LB-FT	215.7 LB	740.2 LB	674.4 LB
18 "			182.7 PSF	91.3 PSF	182.7 PSF	91.3 PSF	182.7 PSF	91.3 PSF	182.7 PSF	91.3 PSF	182.7 PSF	91.3 PSF	182.7 PSF	91.3 PSF	129.5 PSF	64.7 PSF	129.5 PSF	64.7 PSF	396.90 LB-FT	404.7 LB	1151.2 LB	904.0 LB
24 "	30 "	1800 in²	182.7 PSF	91.3 PSF	182.7 PSF	91.3 PSF	181.7 PSF	90.8 PSF	181.7 PSF	90.8 PSF	136.2 PSF	68.1 PSF	136.2 PSF	68.1 PSF	90.8 PSF	45.4 PSF	90.8 PSF	45.4 PSF	354.90 LB-FT	283.9 LB	925.6 LB	788.0 LB
30 "			172.6 PSF	86.3 PSF	172.6 PSF	86.3 PSF	138.0 PSF	69.0 PSF	138.0 PSF	69.0 PSF	103.5 PSF	51.7 PSF	103.5 PSF	51.7 PSF	69.0 PSF	34.5 PSF	69.0 PSF	34.5 PSF	326.50 LB-FT	215.7 LB	789.3 LB	717.5 LB
18 "			116.9 PSF	58.4 PSF	116.9 PSF	58.4 PSF	116.9 PSF	58.4 PSF	116.9 PSF	58.4 PSF	116.9 PSF	58.4 PSF	116.9 PSF	58.4 PSF	89.9 PSF	44.9 PSF	89.9 PSF	44.9 PSF	396.90 LB-FT	404.7 LB	1232.2 LB	984.9 LB
24 "	36 "	2592 in²	116.9 PSF	58.4 PSF	116.9 PSF	58.4 PSF	116.9 PSF	58.4 PSF	116.9 PSF	58.4 PSF	94.6 PSF	47.3 PSF	94.6 PSF	47.3 PSF	63.0 PSF	31.5 PSF	63.0 PSF	31.5 PSF	354.90 LB-FT	283.9 LB	978.7 LB	844.7 LB
30 "			116.9 PSF	58.4 PSF	116.9 PSF	58.4 PSF	95.8 PSF	47.9 PSF	95.8 PSF	47.9 PSF	71.9 PSF	35.9 PSF	71.9 PSF	35.9 PSF	47.9 PSF	23.9 PSF	47.9 PSF	23.9 PSF	326.50 LB-FT	215.7 LB	830.2 LB	760.7 LB
18 "			79.6 PSF	39.8 PSF	79.6 PSF	39.8 PSF	79.6 PSF	39.8 PSF	79.6 PSF	39.8 PSF	79.6 PSF	39.8 PSF	79.6 PSF	39.8 PSF	66.0 PSF	33.0 PSF	66.0 PSF	33.0 PSF	396.90 LB-FT	404.7 LB	1313.1 LB	1065.9 LB
24 "	42 "	3528 in²	79.6 PSF	39.8 PSF	79.6 PSF	39.8 PSF	79.6 PSF	39.8 PSF	79.6 PSF	39.8 PSF	69.5 PSF	34.7 PSF	69.5 PSF	34.7 PSF	46.3 PSF	23.1 PSF	46.3 PSF	23.1 PSF	354.90 LB-FT	283.9 LB	1035.4 LB	901.5 LB
30 "			79.6 PSF	39.8 PSF	79.6 PSF	39.8 PSF	70.4 PSF	35.2 PSF	70.4 PSF	35.2 PSF	52.8 PSF	26.4 PSF	52.8 PSF	26.4 PSF	35.2 PSF	17.6 PSF	35.2 PSF	17.6 PSF	326.50 LB-FT	215.7 LB	873.4 LB	803.8 LB

STD 30" STAND DEPTH: MAX FACE AREA (576in² - 1764in²), FRAME QUANTITY (2-3 FRAMES)

STAND HEIGHT	MAX MEAN UNIT HEIGHT	MAX FACE AREA	UNIT TO FRAME RATIO: MAX FACE AREA : 3 FRAMES — ANCHOR TYPE: 1 OR 4 — MAX ALLOWABLE LATERAL LOAD	MAX ALLOWABLE UPLIFT	ANCHORS TYPE: 2 OR 3 — MAX ALLOWABLE LATERAL LOAD	MAX ALLOWABLE UPLIFT	MAX FACE AREA : 2 FRAMES — ANCHOR TYPE: 1 OR 4 — MAX ALLOWABLE LATERAL LOAD	MAX ALLOWABLE UPLIFT	ANCHORS TYPE: 2 OR 3 — MAX ALLOWABLE LATERAL LOAD	MAX ALLOWABLE UPLIFT	LOAD TRANSFER INFORMATION FOR USE WITH HOST STRUCTURE VERIFICATION ONLY — MAX. BASE MOMENT (M)	MAX. BASE SHEAR (V)	MAX. BASE UPLIFT (T)	MAX. BASE GRAVITY (C)
18 "			200.0 PSF	100.0 PSF	200.0 PSF	100.0 PSF	200.0 PSF	100.0 PSF	200.0 PSF	100.0 PSF	196.10 LB-FT	200.0 LB	528.7 LB	407.5 LB
24 "	24 "	576 in²	200.0 PSF	100.0 PSF	200.0 PSF	100.0 PSF	200.0 PSF	100.0 PSF	200.0 PSF	100.0 PSF	250.00 LB-FT	200.0 LB	608.7 LB	487.5 LB
30 "			200.0 PSF	100.0 PSF	200.0 PSF	100.0 PSF	200.0 PSF	100.0 PSF	200.0 PSF	100.0 PSF	302.60 LB-FT	200.0 LB	688.7 LB	567.5 LB
18 "			182.7 PSF	91.3 PSF	182.7 PSF	91.3 PSF	182.7 PSF	91.3 PSF	182.7 PSF	91.3 PSF	280.10 LB-FT	285.5 LB	816.8 LB	610.0 LB
24 "	30 "	900 in²	182.7 PSF	91.3 PSF	182.7 PSF	91.3 PSF	181.7 PSF	90.8 PSF	181.7 PSF	90.8 PSF	354.90 LB-FT	283.9 LB	925.6 LB	720.5 LB
30 "			182.7 PSF	91.3 PSF	182.7 PSF	91.3 PSF	138.0 PSF	69.0 PSF	138.0 PSF	69.0 PSF	326.50 LB-FT	215.7 LB	787.1 LB	650.0 LB
18 "			116.9 PSF	58.4 PSF	116.9 PSF	58.4 PSF	116.9 PSF	58.4 PSF	116.9 PSF	58.4 PSF	258.00 LB-FT	263.1 LB	804.3 LB	620.0 LB
24 "	36 "	1296 in²	116.9 PSF	58.4 PSF	116.9 PSF	58.4 PSF	116.9 PSF	58.4 PSF	116.9 PSF	58.4 PSF	328.90 LB-FT	263.1 LB	909.6 LB	725.2 LB
30 "			116.9 PSF	58.4 PSF	116.9 PSF	58.4 PSF	95.8 PSF	47.9 PSF	95.8 PSF	47.9 PSF	326.50 LB-FT	215.7 LB	830.2 LB	693.2 LB
18 "			79.6 PSF	39.8 PSF	79.6 PSF	39.8 PSF	79.6 PSF	39.8 PSF	79.6 PSF	39.8 PSF	239.20 LB-FT	243.9 LB	793.7 LB	628.5 LB
24 "	42 "	1764 in²	79.6 PSF	39.8 PSF	79.6 PSF	39.8 PSF	79.6 PSF	39.8 PSF	79.6 PSF	39.8 PSF	304.90 LB-FT	243.9 LB	891.2 LB	726.1 LB
30 "			79.6 PSF	39.8 PSF	79.6 PSF	39.8 PSF	70.4 PSF	35.2 PSF	70.4 PSF	35.2 PSF	326.50 LB-FT	215.7 LB	873.4 LB	736.3 LB

PRODUCT REVISED
as complying with the Florida Building Code
Acceptance No 12-0612.29
Expiration Date 01/15/2014
By
Miami Dade Product Control

DESIGN SCHEDULE NOTES:

1. MAXIMUM CALCULATED FACE AREA SHALL BE EQUAL TO OR LESS THAN THE MAXIMUM ALLOWABLE FACE AREA FOR EACH CONFIGURATION.
2. REFERENCE ANCHOR SCHEDULE FOR ANCHOR TYPES LISTED HEREIN.

FRANK L. BENNARDO, P.E. #PE0046549
FRANK L. BENNARDO LICENSE No. 46549 08/21/2012 STATE OF FLORIDA PROFESSIONAL ENGINEER

ENGINEERING EXPRESS®
160 SW 12th AVENUE, #106
DEERFIELD BEACH, FL 33442
PH: (954) 354-0660 FAX: (954) 354-0443
WWW.ENGEXP.COM
CERT OF AUTH #9885
A FRANK L. BENNARDO, P.E., INC. INNOVATION

MIAMI TECH, INC
3611 NW 74TH STREET
MIAMI, FL 33147
PHONE:(305) 693-7054 FAX:(305) 693-6125

ALUMINUM A/C STAND
HVHZ COMPLAINT

REMARKS	DRWN	CHKD	DATE
INIT ISSUE	KL	CL	01/10/07
REV. TELESCOPIC BOLTS	KL	CL	05/03/07
UPDATE PER 07 FBC	TSB	CL	09/30/08
UPDATE PER 10 FBC	CSL	TSB	05/10/12
REV. PER COMMENTS	CSL	TSB	08/16/12

THIS DOCUMENT IS THE PROPERTY OF ENGINEERING EXPRESS AND SHALL NOT BE REPRODUCED IN WHOLE OR PART WITHOUT WRITTEN CONSENT OF THE CERTIFYING ENGINEER. ALTERATIONS, ADDITIONS, HIGHLIGHTING, OR OTHER MARKINGS TO THIS DOCUMENT ARE NOT PERMITTED AND INVALIDATE OUR CERTIFICATION.

COPYRIGHT ENGINEERING EXPRESS

12-MTI-01

SCALE: NTS 04

PAGE DESCRIPTION:
COVER SHEET

F:\01 Project Files\Miami Tech (MTI)\2012\12-MTI-01 Aluminum Telescopic Rooftop Stands\04 Revise per comments\12-MTI-01-04b AC Stand NOA.dwg
08/21/2012 - 11:58am TroyB

Complying with the Florida Building Code
Acceptance No 12-0612.29
Expiration Date 01/15/2014
By
Miami Dade Product Control

"HD" STAND DESIGN SCHEDULE

HD 36" STAND DEPTH: MAX FACE AREA (2880in² - 8820in²), FRAME QUANTITY (5-8 FRAMES)

STAND HEIGHT	MAX MEAN UNIT HEIGHT	MAX FACE AREA	UNIT TO FRAME RATIO: MAX FACE AREA : 8 FRAMES, ANCHOR TYPE: 1 OR 4		ANCHORS TYPE: 2 OR 3		MAX FACE AREA : 7 FRAMES, ANCHOR TYPE: 1 OR 4		ANCHORS TYPE: 2 OR 3		MAX FACE AREA : 6 FRAMES, ANCHOR TYPE: 1 OR 4		ANCHORS TYPE: 2 OR 3		MAX FACE AREA : 5 FRAMES, ANCHOR TYPE: 1 OR 4		ANCHORS TYPE: 2 OR 3		LOAD TRANSFER INFORMATION FOR USE WITH HOST STRUCTURE VERIFICATION ONLY			
			MAX ALLOWABLE LATERAL LOAD	MAX ALLOWABLE UPLIFT	MAX ALLOWABLE LATERAL LOAD	MAX ALLOWABLE UPLIFT	MAX ALLOWABLE LATERAL LOAD	MAX ALLOWABLE UPLIFT	MAX ALLOWABLE LATERAL LOAD	MAX ALLOWABLE UPLIFT	MAX ALLOWABLE LATERAL LOAD	MAX ALLOWABLE UPLIFT	MAX ALLOWABLE LATERAL LOAD	MAX ALLOWABLE UPLIFT	MAX ALLOWABLE LATERAL LOAD	MAX ALLOWABLE UPLIFT	MAX ALLOWABLE LATERAL LOAD	MAX ALLOWABLE UPLIFT	MAX. BASE MOMENT (M)	MAX. BASE SHEAR (V)	MAX. BASE UPLIFT (T)	MAX. BASE GRAVITY (C)
18 "	24 "	2880 in²	200.0 PSF	100.0 PSF	200.0 PSF	100.0 PSF	200.0 PSF	100.0 PSF	200.0 PSF	100.0 PSF	200.0 PSF	100.0 PSF	200.0 PSF	100.0 PSF	200.0 PSF	100.0 PSF	200.0 PSF	100.0 PSF	386.40 LB-FT	400.0 LB	910.8 LB	668.3 LB
24 "			200.0 PSF	100.0 PSF	200.0 PSF	100.0 PSF	200.0 PSF	100.0 PSF	200.0 PSF	100.0 PSF	193.2 PSF	96.6 PSF	193.2 PSF	96.6 PSF	161.0 PSF	80.5 PSF	161.0 PSF	80.5 PSF	396.90 LB-FT	322.0 LB	839.9 LB	671.6 LB
30 "			198.8 PSF	99.4 PSF	198.8 PSF	99.4 PSF	173.9 PSF	86.9 PSF	173.9 PSF	86.9 PSF	149.1 PSF	74.5 PSF	149.1 PSF	74.5 PSF	124.2 PSF	62.1 PSF	124.2 PSF	62.1 PSF	371.40 LB-FT	248.5 LB	731.6 LB	632.1 LB
18 "	30 "	4500 in²	182.7 PSF	91.3 PSF	182.7 PSF	91.3 PSF	182.7 PSF	91.3 PSF	182.7 PSF	91.3 PSF	157.7 PSF	78.8 PSF	157.7 PSF	78.8 PSF	131.4 PSF	65.7 PSF	131.4 PSF	65.7 PSF	396.90 LB-FT	410.9 LB	1008.5 LB	751.3 LB
24 "			164.8 PSF	82.4 PSF	164.8 PSF	82.4 PSF	144.2 PSF	72.1 PSF	144.2 PSF	72.1 PSF	123.6 PSF	61.8 PSF	123.6 PSF	61.8 PSF	103.0 PSF	51.5 PSF	103.0 PSF	51.5 PSF	396.90 LB-FT	322.0 LB	898.2 LB	725.3 LB
30 "			127.2 PSF	63.6 PSF	127.2 PSF	63.6 PSF	111.3 PSF	55.6 PSF	111.3 PSF	55.6 PSF	95.4 PSF	47.7 PSF	95.4 PSF	47.7 PSF	79.5 PSF	39.7 PSF	79.5 PSF	39.7 PSF	371.40 LB-FT	248.5 LB	773.0 LB	673.5 LB
18 "	36 "	6480 in²	126.9 PSF	63.4 PSF	126.9 PSF	63.4 PSF	126.9 PSF	63.4 PSF	126.9 PSF	63.4 PSF	109.5 PSF	54.7 PSF	109.5 PSF	54.7 PSF	91.3 PSF	45.6 PSF	91.3 PSF	45.6 PSF	396.90 LB-FT	410.9 LB	1077.0 LB	819.8 LB
24 "			114.4 PSF	57.2 PSF	114.4 PSF	57.2 PSF	100.1 PSF	50.0 PSF	100.1 PSF	50.0 PSF	85.8 PSF	42.9 PSF	85.8 PSF	42.9 PSF	71.5 PSF	35.7 PSF	71.5 PSF	35.7 PSF	396.90 LB-FT	322.0 LB	951.9 LB	779.0 LB
30 "			88.3 PSF	44.1 PSF	88.3 PSF	44.1 PSF	77.3 PSF	38.6 PSF	77.3 PSF	38.6 PSF	66.2 PSF	33.1 PSF	66.2 PSF	33.1 PSF	55.2 PSF	27.6 PSF	55.2 PSF	27.6 PSF	371.40 LB-FT	248.5 LB	814.4 LB	714.9 LB
18 "	42 "	8820 in²	87.0 PSF	43.5 PSF	87.0 PSF	43.5 PSF	87.0 PSF	43.5 PSF	87.0 PSF	43.5 PSF	80.5 PSF	40.2 PSF	80.5 PSF	40.2 PSF	67.0 PSF	33.5 PSF	67.0 PSF	33.5 PSF	396.90 LB-FT	410.9 LB	1145.5 LB	888.3 LB
24 "			84.1 PSF	42.0 PSF	84.1 PSF	42.0 PSF	73.6 PSF	36.8 PSF	73.6 PSF	36.8 PSF	63.0 PSF	31.5 PSF	63.0 PSF	31.5 PSF	52.5 PSF	26.2 PSF	52.5 PSF	26.2 PSF	396.90 LB-FT	322.0 LB	1005.6 LB	832.6 LB
30 "			64.9 PSF	32.4 PSF	64.9 PSF	32.4 PSF	56.8 PSF	28.4 PSF	56.8 PSF	28.4 PSF	48.6 PSF	24.3 PSF	48.6 PSF	24.3 PSF	40.5 PSF	20.2 PSF	40.5 PSF	20.2 PSF	371.40 LB-FT	248.5 LB	855.8 LB	756.3 LB

HD 36" STAND DEPTH: MAX FACE AREA (2304in² - 7056in²), FRAME QUANTITY (4-7 FRAMES)

STAND HEIGHT	MAX MEAN UNIT HEIGHT	MAX FACE AREA	UNIT TO FRAME RATIO: MAX FACE AREA : 7 FRAMES, ANCHOR TYPE: 1 OR 4		ANCHORS TYPE: 2 OR 3		MAX FACE AREA : 6 FRAMES, ANCHOR TYPE: 1 OR 4		ANCHORS TYPE: 2 OR 3		MAX FACE AREA : 5 FRAMES, ANCHOR TYPE: 1 OR 4		ANCHORS TYPE: 2 OR 3		MAX FACE AREA : 4 FRAMES, ANCHOR TYPE: 1 OR 4		ANCHORS TYPE: 2 OR 3		LOAD TRANSFER INFORMATION FOR USE WITH HOST STRUCTURE VERIFICATION ONLY			
			MAX ALLOWABLE LATERAL LOAD	MAX ALLOWABLE UPLIFT	MAX ALLOWABLE LATERAL LOAD	MAX ALLOWABLE UPLIFT	MAX ALLOWABLE LATERAL LOAD	MAX ALLOWABLE UPLIFT	MAX ALLOWABLE LATERAL LOAD	MAX ALLOWABLE UPLIFT	MAX ALLOWABLE LATERAL LOAD	MAX ALLOWABLE UPLIFT	MAX ALLOWABLE LATERAL LOAD	MAX ALLOWABLE UPLIFT	MAX ALLOWABLE LATERAL LOAD	MAX ALLOWABLE UPLIFT	MAX ALLOWABLE LATERAL LOAD	MAX ALLOWABLE UPLIFT	MAX. BASE MOMENT (M)	MAX. BASE SHEAR (V)	MAX. BASE UPLIFT (T)	MAX. BASE GRAVITY (C)
18 "	24 "	2304 in²	200.0 PSF	100.0 PSF	200.0 PSF	100.0 PSF	200.0 PSF	100.0 PSF	200.0 PSF	100.0 PSF	200.0 PSF	100.0 PSF	200.0 PSF	100.0 PSF	200.0 PSF	100.0 PSF	200.0 PSF	100.0 PSF	386.40 LB-FT	400.0 LB	910.8 LB	668.3 LB
24 "			200.0 PSF	100.0 PSF	200.0 PSF	100.0 PSF	200.0 PSF	100.0 PSF	200.0 PSF	100.0 PSF	200.0 PSF	100.0 PSF	200.0 PSF	100.0 PSF	161.0 PSF	80.5 PSF	161.0 PSF	80.5 PSF	396.90 LB-FT	322.0 LB	836.1 LB	671.6 LB
30 "			200.0 PSF	100.0 PSF	200.0 PSF	100.0 PSF	186.4 PSF	93.2 PSF	186.4 PSF	93.2 PSF	155.3 PSF	77.6 PSF	155.3 PSF	77.6 PSF	124.2 PSF	62.1 PSF	124.2 PSF	62.1 PSF	371.40 LB-FT	248.5 LB	730.6 LB	632.1 LB
18 "	30 "	3600 in²	182.7 PSF	91.3 PSF	182.7 PSF	91.3 PSF	182.7 PSF	91.3 PSF	182.7 PSF	91.3 PSF	164.3 PSF	82.1 PSF	164.3 PSF	82.1 PSF	131.4 PSF	65.7 PSF	131.4 PSF	65.7 PSF	396.90 LB-FT	410.9 LB	1009.2 LB	751.3 LB
24 "			180.3 PSF	90.1 PSF	180.3 PSF	90.1 PSF	154.5 PSF	77.2 PSF	154.5 PSF	77.2 PSF	128.8 PSF	64.4 PSF	128.8 PSF	64.4 PSF	103.0 PSF	51.5 PSF	103.0 PSF	51.5 PSF	396.90 LB-FT	322.0 LB	899.4 LB	725.3 LB
30 "			139.1 PSF	69.5 PSF	139.1 PSF	69.5 PSF	119.3 PSF	59.6 PSF	119.3 PSF	59.6 PSF	99.4 PSF	49.7 PSF	99.4 PSF	49.7 PSF	79.5 PSF	39.7 PSF	79.5 PSF	39.7 PSF	371.40 LB-FT	248.5 LB	774.2 LB	673.5 LB
18 "	36 "	5184 in²	126.9 PSF	63.4 PSF	126.9 PSF	63.4 PSF	126.9 PSF	63.4 PSF	126.9 PSF	63.4 PSF	114.1 PSF	57.0 PSF	114.1 PSF	57.0 PSF	91.3 PSF	45.6 PSF	91.3 PSF	45.6 PSF	396.90 LB-FT	410.9 LB	1077.7 LB	819.8 LB
24 "			125.2 PSF	62.6 PSF	125.2 PSF	62.6 PSF	107.3 PSF	53.6 PSF	107.3 PSF	53.6 PSF	89.4 PSF	44.7 PSF	89.4 PSF	44.7 PSF	71.5 PSF	35.7 PSF	71.5 PSF	35.7 PSF	396.90 LB-FT	322.0 LB	953.1 LB	779.0 LB
30 "			96.6 PSF	48.3 PSF	96.6 PSF	48.3 PSF	82.8 PSF	41.4 PSF	82.8 PSF	41.4 PSF	69.0 PSF	34.5 PSF	69.0 PSF	34.5 PSF	55.2 PSF	27.6 PSF	55.2 PSF	27.6 PSF	371.40 LB-FT	248.5 LB	815.6 LB	714.9 LB
18 "	42 "	7056 in²	87.0 PSF	43.5 PSF	87.0 PSF	43.5 PSF	87.0 PSF	43.5 PSF	87.0 PSF	43.5 PSF	83.8 PSF	41.9 PSF	83.8 PSF	41.9 PSF	67.0 PSF	33.5 PSF	67.0 PSF	33.5 PSF	396.90 LB-FT	410.9 LB	1146.2 LB	888.3 LB
24 "			87.0 PSF	43.5 PSF	87.0 PSF	43.5 PSF	78.8 PSF	39.4 PSF	78.8 PSF	39.4 PSF	65.7 PSF	32.8 PSF	65.7 PSF	32.8 PSF	52.5 PSF	26.2 PSF	52.5 PSF	26.2 PSF	396.90 LB-FT	322.0 LB	1004.6 LB	832.6 LB
30 "			71.0 PSF	35.5 PSF	71.0 PSF	35.5 PSF	60.8 PSF	30.4 PSF	60.8 PSF	30.4 PSF	50.7 PSF	25.3 PSF	50.7 PSF	25.3 PSF	40.5 PSF	20.2 PSF	40.5 PSF	20.2 PSF	371.40 LB-FT	248.5 LB	857.0 LB	756.3 LB

HD 36" STAND DEPTH: MAX FACE AREA (1728in² - 5292in²), FRAME QUANTITY (3-6 FRAMES)

STAND HEIGHT	MAX MEAN UNIT HEIGHT	MAX FACE AREA	UNIT TO FRAME RATIO: MAX FACE AREA : 6 FRAMES, ANCHOR TYPE: 1 OR 4		ANCHORS TYPE: 2 OR 3		MAX FACE AREA : 5 FRAMES, ANCHOR TYPE: 1 OR 4		ANCHORS TYPE: 2 OR 3		MAX FACE AREA : 4 FRAMES, ANCHOR TYPE: 1 OR 4		ANCHORS TYPE: 2 OR 3		MAX FACE AREA : 3 FRAMES, ANCHOR TYPE: 1 OR 4		ANCHORS TYPE: 2 OR 3		LOAD TRANSFER INFORMATION FOR USE WITH HOST STRUCTURE VERIFICATION ONLY			
			MAX ALLOWABLE LATERAL LOAD	MAX ALLOWABLE UPLIFT	MAX ALLOWABLE LATERAL LOAD	MAX ALLOWABLE UPLIFT	MAX ALLOWABLE LATERAL LOAD	MAX ALLOWABLE UPLIFT	MAX ALLOWABLE LATERAL LOAD	MAX ALLOWABLE UPLIFT	MAX ALLOWABLE LATERAL LOAD	MAX ALLOWABLE UPLIFT	MAX ALLOWABLE LATERAL LOAD	MAX ALLOWABLE UPLIFT	MAX ALLOWABLE LATERAL LOAD	MAX ALLOWABLE UPLIFT	MAX ALLOWABLE LATERAL LOAD	MAX ALLOWABLE UPLIFT	MAX. BASE MOMENT (M)	MAX. BASE SHEAR (V)	MAX. BASE UPLIFT (T)	MAX. BASE GRAVITY (C)
18 "	24 "	1728 in²	200.0 PSF	100.0 PSF	200.0 PSF	100.0 PSF	200.0 PSF	100.0 PSF	200.0 PSF	100.0 PSF	200.0 PSF	100.0 PSF	200.0 PSF	100.0 PSF	200.0 PSF	100.0 PSF	200.0 PSF	100.0 PSF	386.40 LB-FT	400.0 LB	910.8 LB	668.3 LB
24 "			200.0 PSF	100.0 PSF	200.0 PSF	100.0 PSF	200.0 PSF	100.0 PSF	200.0 PSF	100.0 PSF	200.0 PSF	100.0 PSF	200.0 PSF	100.0 PSF	161.0 PSF	80.5 PSF	161.0 PSF	80.5 PSF	396.90 LB-FT	322.0 LB	836.1 LB	671.6 LB
30 "			200.0 PSF	100.0 PSF	200.0 PSF	100.0 PSF	200.0 PSF	100.0 PSF	200.0 PSF	100.0 PSF	165.7 PSF	82.8 PSF	165.7 PSF	82.8 PSF	124.2 PSF	62.1 PSF	124.2 PSF	62.1 PSF	371.40 LB-FT	248.5 LB	728.7 LB	632.1 LB
18 "	30 "	2700 in²	182.7 PSF	91.3 PSF	182.7 PSF	91.3 PSF	182.7 PSF	91.3 PSF	182.7 PSF	91.3 PSF	175.3 PSF	87.6 PSF	175.3 PSF	87.6 PSF	131.4 PSF	65.7 PSF	131.4 PSF	65.7 PSF	396.90 LB-FT	410.9 LB	1010.4 LB	751.3 LB
24 "			182.7 PSF	91.3 PSF	182.7 PSF	91.3 PSF	171.7 PSF	85.8 PSF	171.7 PSF	85.8 PSF	137.3 PSF	68.6 PSF	137.3 PSF	68.6 PSF	103.0 PSF	51.5 PSF	103.0 PSF	51.5 PSF	396.90 LB-FT	322.0 LB	898.8 LB	725.3 LB
30 "			159.0 PSF	79.5 PSF	159.0 PSF	79.5 PSF	132.5 PSF	66.2 PSF	132.5 PSF	66.2 PSF	106.0 PSF	53.0 PSF	106.0 PSF	53.0 PSF	79.5 PSF	39.7 PSF	79.5 PSF	39.7 PSF	371.40 LB-FT	248.5 LB	775.8 LB	673.5 LB
18 "	36 "	3888 in²	126.9 PSF	63.4 PSF	126.9 PSF	63.4 PSF	126.9 PSF	63.4 PSF	126.9 PSF	63.4 PSF	121.7 PSF	60.8 PSF	121.7 PSF	60.8 PSF	91.3 PSF	45.6 PSF	91.3 PSF	45.6 PSF	396.90 LB-FT	410.9 LB	1078.9 LB	819.8 LB
24 "			126.9 PSF	63.4 PSF	126.9 PSF	63.4 PSF	119.2 PSF	59.6 PSF	119.2 PSF	59.6 PSF	95.4 PSF	47.7 PSF	95.4 PSF	47.7 PSF	71.5 PSF	35.7 PSF	71.5 PSF	35.7 PSF	396.90 LB-FT	322.0 LB	952.5 LB	779.0 LB
30 "			110.4 PSF	55.2 PSF	110.4 PSF	55.2 PSF	92.0 PSF	46.0 PSF	92.0 PSF	46.0 PSF	73.6 PSF	36.8 PSF	73.6 PSF	36.8 PSF	55.2 PSF	27.6 PSF	55.2 PSF	27.6 PSF	371.40 LB-FT	248.5 LB	817.2 LB	714.9 LB
18 "	42 "	5292 in²	87.0 PSF	43.5 PSF	87.0 PSF	43.5 PSF	87.0 PSF	43.5 PSF	87.0 PSF	43.5 PSF	87.0 PSF	43.5 PSF	87.0 PSF	43.5 PSF	67.0 PSF	33.5 PSF	67.0 PSF	33.5 PSF	396.90 LB-FT	410.9 LB	1141.7 LB	888.3 LB
24 "			87.0 PSF	43.5 PSF	87.0 PSF	43.5 PSF	87.0 PSF	43.5 PSF	87.0 PSF	43.5 PSF	70.0 PSF	35.0 PSF	70.0 PSF	35.0 PSF	52.5 PSF	26.2 PSF	52.5 PSF	26.2 PSF	396.90 LB-FT	322.0 LB	1002.7 LB	832.6 LB
30 "			81.1 PSF	40.5 PSF	81.1 PSF	40.5 PSF	67.6 PSF	33.8 PSF	67.6 PSF	33.8 PSF	54.1 PSF	27.0 PSF	54.1 PSF	27.0 PSF	40.5 PSF	20.2 PSF	40.5 PSF	20.2 PSF	371.40 LB-FT	248.5 LB	858.6 LB	756.3 LB

HD 36" STAND DEPTH: MAX FACE AREA (1152in² - 3528in²), FRAME QUANTITY (2-5 FRAMES)

STAND HEIGHT	MAX MEAN UNIT HEIGHT	MAX FACE AREA	UNIT TO FRAME RATIO: MAX FACE AREA : 5 FRAMES, ANCHOR TYPE: 1 OR 4		ANCHORS TYPE: 2 OR 3		MAX FACE AREA : 4 FRAMES, ANCHOR TYPE: 1 OR 4		ANCHORS TYPE: 2 OR 3		MAX FACE AREA : 3 FRAMES, ANCHOR TYPE: 1 OR 4		ANCHORS TYPE: 2 OR 3		MAX FACE AREA : 2 FRAMES, ANCHOR TYPE: 1 OR 4		ANCHORS TYPE: 2 OR 3		LOAD TRANSFER INFORMATION FOR USE WITH HOST STRUCTURE VERIFICATION ONLY			
			MAX ALLOWABLE LATERAL LOAD	MAX ALLOWABLE UPLIFT	MAX ALLOWABLE LATERAL LOAD	MAX ALLOWABLE UPLIFT	MAX ALLOWABLE LATERAL LOAD	MAX ALLOWABLE UPLIFT	MAX ALLOWABLE LATERAL LOAD	MAX ALLOWABLE UPLIFT	MAX ALLOWABLE LATERAL LOAD	MAX ALLOWABLE UPLIFT	MAX ALLOWABLE LATERAL LOAD	MAX ALLOWABLE UPLIFT	MAX ALLOWABLE LATERAL LOAD	MAX ALLOWABLE UPLIFT	MAX ALLOWABLE LATERAL LOAD	MAX ALLOWABLE UPLIFT	MAX. BASE MOMENT (M)	MAX. BASE SHEAR (V)	MAX. BASE UPLIFT (T)	MAX. BASE GRAVITY (C)
18 "	24 "	1152 in²	200.0 PSF	100.0 PSF	200.0 PSF	100.0 PSF	200.0 PSF	100.0 PSF	200.0 PSF	100.0 PSF	200.0 PSF	100.0 PSF	200.0 PSF	100.0 PSF	200.0 PSF	100.0 PSF	200.0 PSF	100.0 PSF	386.40 LB-FT	400.0 LB	910.8 LB	668.3 LB
24 "			200.0 PSF	100.0 PSF	200.0 PSF	100.0 PSF	200.0 PSF	100.0 PSF	200.0 PSF	100.0 PSF	200.0 PSF	100.0 PSF	200.0 PSF	100.0 PSF	161.0 PSF	80.5 PSF	161.0 PSF	80.5 PSF	396.90 LB-FT	322.0 LB	836.1 LB	671.6 LB
30 "			200.0 PSF	100.0 PSF	200.0 PSF	100.0 PSF	200.0 PSF	100.0 PSF	200.0 PSF	100.0 PSF	186.4 PSF	93.2 PSF	186.4 PSF	93.2 PSF	124.2 PSF	62.1 PSF	124.2 PSF	62.1 PSF	371.40 LB-FT	248.5 LB	730.6 LB	632.1 LB
18 "	30 "	1800 in²	182.7 PSF	91.3 PSF	182.7 PSF	91.3 PSF	182.7 PSF	91.3 PSF	182.7 PSF	91.3 PSF	182.7 PSF	91.3 PSF	182.7 PSF	91.3 PSF	131.4 PSF	65.7 PSF	131.4 PSF	65.7 PSF	396.90 LB-FT	410.9 LB	1004.7 LB	751.3 LB
24 "			182.7 PSF	91.3 PSF	182.7 PSF	91.3 PSF	182.7 PSF	91.3 PSF	182.7 PSF	91.3 PSF	154.5 PSF	77.2 PSF	154.5 PSF	77.2 PSF	103.0 PSF	51.5 PSF	103.0 PSF	51.5 PSF	396.90 LB-FT	322.0 LB	897.3 LB	725.3 LB
30 "			182.7 PSF	91.3 PSF	182.7 PSF	91.3 PSF	159.0 PSF	79.5 PSF	159.0 PSF	79.5 PSF	119.3 PSF	59.6 PSF	119.3 PSF	59.6 PSF	79.5 PSF	39.7 PSF	79.5 PSF	39.7 PSF	371.40 LB-FT	248.5 LB	775.8 LB	673.5 LB
18 "	36 "	2592 in²	126.9 PSF	63.4 PSF	126.9 PSF	63.4 PSF	126.9 PSF	63.4 PSF	126.9 PSF	63.4 PSF	126.9 PSF	63.4 PSF	126.9 PSF	63.4 PSF	91.3 PSF	45.6 PSF	91.3 PSF	45.6 PSF	396.90 LB-FT	410.9 LB	1073.2 LB	819.8 LB
24 "			126.9 PSF	63.4 PSF	126.9 PSF	63.4 PSF	126.9 PSF	63.4 PSF	126.9 PSF	63.4 PSF	107.3 PSF	53.6 PSF	107.3 PSF	53.6 PSF	71.5 PSF	35.7 PSF	71.5 PSF	35.7 PSF	396.90 LB-FT	322.0 LB	951.0 LB	779.0 LB
30 "			126.9 PSF	63.4 PSF	126.9 PSF	63.4 PSF	110.4 PSF	55.2 PSF	110.4 PSF	55.2 PSF	82.8 PSF	41.4 PSF	82.8 PSF	41.4 PSF	55.2 PSF	27.6 PSF	55.2 PSF	27.6 PSF	371.40 LB-FT	248.5 LB	817.2 LB	714.9 LB
18 "	42 "	3528 in²	87.0 PSF	43.5 PSF	87.0 PSF	43.5 PSF	87.0 PSF	43.5 PSF	87.0 PSF	43.5 PSF	87.0 PSF	43.5 PSF	87.0 PSF	43.5 PSF	67.0 PSF	33.5 PSF	67.0 PSF	33.5 PSF	396.90 LB-FT	410.9 LB	1141.7 LB	888.3 LB
24 "			87.0 PSF	43.5 PSF	87.0 PSF	43.5 PSF	87.0 PSF	43.5 PSF	87.0 PSF	43.5 PSF	78.8 PSF	39.4 PSF	78.8 PSF	39.4 PSF	52.5 PSF	26.2 PSF	52.5 PSF	26.2 PSF	396.90 LB-FT	322.0 LB	1004.6 LB	832.6 LB
30 "			87.0 PSF	43.5 PSF	87.0 PSF	43.5 PSF	81.1 PSF	40.5 PSF	81.1 PSF	40.5 PSF	60.8 PSF	30.4 PSF	60.8 PSF	30.4 PSF	40.5 PSF	20.2 PSF	40.5 PSF	20.2 PSF	371.40 LB-FT	248.5 LB	858.6 LB	756.3 LB

FRANK L. BENNARDO
LICENSE
No. 46549
08/21/2012
STATE OF FLORIDA
PROFESSIONAL ENGINEER

ENGINEERING EXPRESS®
160 SW 12th AVENUE,
DEERFIELD BEACH, FL 33442
Ph: (954) 354-0660 Fax: (954) 354-0653
WWW.ENGEXP.COM
CERT OF AUTH #9885
A. FRANK L. BENNARDO, P.E., INC. INNOVATION

MIAMI TECH, INC
3611 NW 74TH STREET
MIAMI, FL 33147
PHONE:(305) 693-7054 FAX:(305) 693-6125

ALUMINUM A/C STAND
HVHZ COMPLAINT

REMARKS	DRWN	CHKD	DATE
INIT ISSUE	KL	CL	01/10/07
REV. TELESCOPIC BOLTS	KL	CL	05/03/07
UPDATE PER '07 FBC	TSB	CL	09/30/08
UPDATE PER '10 FBC	CSL	TSB	05/10/12
REV. PER COMMENTS	CSL	TSB	08/16/12

THIS DOCUMENT IS THE PROPERTY OF ENGINEERING EXPRESS AND MAY NOT BE REPRODUCED IN WHOLE OR IN PART WITHOUT WRITTEN PERMISSION FROM ENGINEERING EXPRESS. ALTERATIONS, ADDITIONS, HIGHLIGHTING, OR OTHER MARKINGS TO THIS DOCUMENT ARE NOT PERMITTED AND INVALIDATE OUR CERTIFICATION.

COPYRIGHT ENGINEERING EXPRESS

12-MTI-01

SCALE: NTS 04

PAGE DESCRIPTION:
COVER SHEET

6 OF 10

08/21/2012 - 11:58am TroyB F:\01 Project Files\Miami Tech (MTI)\2012\12-MTI-01 Aluminum Telescopic Rooftop Stands\04 Revise per comments\12-MTI-01-04b AC Stand NOA.dwg

"HD" STAND DESIGN SCHEDULE CONTINUED

PRODUCT REVISED
as complying with the Florida Building Code
Acceptance No 12-0612.29
Expiration Date 01/15/2014
By
Miami Dade Product Control

HD 36" STAND DEPTH: MAX FACE AREA (576in² - 1764in²), FRAME QUANTITY (2-3 FRAMES)

STAND HEIGHT	MAX MEAN UNIT HEIGHT	MAX FACE AREA	UNIT TO FRAME RATIO: MAX FACE AREA : 3 FRAMES, ANCHOR TYPE: 1 OR 4 — MAX ALLOWABLE LATERAL LOAD	MAX ALLOWABLE UPLIFT	ANCHOR TYPE: 2 OR 3 — MAX ALLOWABLE LATERAL LOAD	MAX ALLOWABLE UPLIFT	MAX FACE AREA : 2 FRAMES, ANCHOR TYPE: 1 OR 4 — MAX ALLOWABLE LATERAL LOAD	MAX ALLOWABLE UPLIFT	ANCHOR TYPE: 2 OR 3 — MAX ALLOWABLE LATERAL LOAD	MAX ALLOWABLE UPLIFT	LOAD TRANSFER INFORMATION FOR USE WITH HOST STRUCTURE VERIFICATION ONLY: MAX. BASE MOMENT (M)	MAX. BASE SHEAR (V)	MAX. BASE UPLIFT (T)	MAX. BASE GRAVITY (C)
18 "	24 "	576 in²	200.0 PSF	100.0 PSF	200.0 PSF	100.0 PSF	200.0 PSF	100.0 PSF	200.0 PSF	100.0 PSF	193.20 LB-FT	200.0 LB	455.4 LB	334.1 LB
24 "			200.0 PSF	100.0 PSF	200.0 PSF	100.0 PSF	200.0 PSF	100.0 PSF	200.0 PSF	100.0 PSF	246.50 LB-FT	200.0 LB	522.0 LB	400.8 LB
30 "			200.0 PSF	100.0 PSF	200.0 PSF	100.0 PSF	200.0 PSF	100.0 PSF	200.0 PSF	100.0 PSF	298.80 LB-FT	200.0 LB	588.7 LB	467.5 LB
18 "	30 "	900 in²	182.7 PSF	91.3 PSF	182.7 PSF	91.3 PSF	182.7 PSF	91.3 PSF	182.7 PSF	91.3 PSF	275.80 LB-FT	285.5 LB	702.6 LB	495.8 LB
24 "			182.7 PSF	91.3 PSF	182.7 PSF	91.3 PSF	182.7 PSF	91.3 PSF	182.7 PSF	91.3 PSF	352.00 LB-FT	285.5 LB	797.8 LB	591.0 LB
30 "			182.7 PSF	91.3 PSF	182.7 PSF	91.3 PSF	159.0 PSF	79.5 PSF	159.0 PSF	79.5 PSF	371.40 LB-FT	248.5 LB	775.8 LB	606.0 LB
18 "	36 "	1296 in²	126.9 PSF	63.4 PSF	126.9 PSF	63.4 PSF	126.9 PSF	63.4 PSF	126.9 PSF	63.4 PSF	275.80 LB-FT	285.5 LB	750.2 LB	543.4 LB
24 "			126.9 PSF	63.4 PSF	126.9 PSF	63.4 PSF	126.9 PSF	63.4 PSF	126.9 PSF	63.4 PSF	352.00 LB-FT	285.5 LB	845.4 LB	638.6 LB
30 "			126.9 PSF	63.4 PSF	126.9 PSF	63.4 PSF	110.4 PSF	55.2 PSF	110.4 PSF	55.2 PSF	371.40 LB-FT	248.5 LB	817.2 LB	647.4 LB
18 "	42 "	1764 in²	87.0 PSF	43.5 PSF	87.0 PSF	43.5 PSF	87.0 PSF	43.5 PSF	87.0 PSF	43.5 PSF	257.50 LB-FT	266.6 LB	744.1 LB	556.2 LB
24 "			87.0 PSF	43.5 PSF	87.0 PSF	43.5 PSF	87.0 PSF	43.5 PSF	87.0 PSF	43.5 PSF	328.70 LB-FT	266.6 LB	833.0 LB	645.1 LB
30 "			87.0 PSF	43.5 PSF	87.0 PSF	43.5 PSF	81.1 PSF	40.5 PSF	81.1 PSF	40.5 PSF	371.40 LB-FT	248.5 LB	858.6 LB	688.8 LB

HD 42" STAND DEPTH: MAX FACE AREA (2880in² - 8820in²), FRAME QUANTITY (5-8 FRAMES)

STAND HEIGHT	MAX MEAN UNIT HEIGHT	MAX FACE AREA	UNIT TO FRAME RATIO: MAX FACE AREA : 8 FRAMES, ANCHOR TYPE: 1 OR 4 — MAX ALLOWABLE LATERAL LOAD	MAX ALLOWABLE UPLIFT	ANCHORS TYPE: 2 OR 3 — MAX ALLOWABLE LATERAL LOAD	MAX ALLOWABLE UPLIFT	MAX FACE AREA : 7 FRAMES, ANCHOR TYPE: 1 OR 4 — MAX ALLOWABLE LATERAL LOAD	MAX ALLOWABLE UPLIFT	ANCHORS TYPE: 2 OR 3 — MAX ALLOWABLE LATERAL LOAD	MAX ALLOWABLE UPLIFT	MAX FACE AREA : 6 FRAMES, ANCHOR TYPE: 1 OR 4 — MAX ALLOWABLE LATERAL LOAD	MAX ALLOWABLE UPLIFT	ANCHORS TYPE: 2 OR 3 — MAX ALLOWABLE LATERAL LOAD	MAX ALLOWABLE UPLIFT	MAX FACE AREA : 5 FRAMES, ANCHOR TYPE: 1 OR 4 — MAX ALLOWABLE LATERAL LOAD	MAX ALLOWABLE UPLIFT	ANCHORS TYPE: 2 OR 3 — MAX ALLOWABLE LATERAL LOAD	MAX ALLOWABLE UPLIFT	LOAD TRANSFER INFORMATION FOR USE WITH HOST STRUCTURE VERIFICATION ONLY: MAX. BASE MOMENT (M)	MAX. BASE SHEAR (V)	MAX. BASE UPLIFT (T)	MAX. BASE GRAVITY (C)
18 "	24 "	2880 in²	200.0 PSF	100.0 PSF	200.0 PSF	100.0 PSF	200.0 PSF	100.0 PSF	200.0 PSF	100.0 PSF	200.0 PSF	100.0 PSF	200.0 PSF	100.0 PSF	200.0 PSF	100.0 PSF	200.0 PSF	100.0 PSF	396.20 LB-FT	400.0 LB	806.0 LB	563.5 LB
24 "			200.0 PSF	100.0 PSF	200.0 PSF	100.0 PSF	200.0 PSF	100.0 PSF	200.0 PSF	100.0 PSF	188.8 PSF	94.4 PSF	188.8 PSF	94.4 PSF	157.3 PSF	78.6 PSF	157.3 PSF	78.6 PSF	396.90 LB-FT	314.6 LB	723.0 LB	562.0 LB
30 "			200.0 PSF	100.0 PSF	200.0 PSF	100.0 PSF	179.6 PSF	89.8 PSF	179.6 PSF	89.8 PSF	153.9 PSF	76.9 PSF	153.9 PSF	76.9 PSF	128.3 PSF	64.1 PSF	128.3 PSF	64.1 PSF	391.60 LB-FT	256.6 LB	662.2 LB	556.6 LB
18 "	30 "	4500 in²	182.7 PSF	91.3 PSF	182.7 PSF	91.3 PSF	179.5 PSF	89.7 PSF	179.5 PSF	89.7 PSF	153.8 PSF	76.9 PSF	153.8 PSF	76.9 PSF	128.2 PSF	64.1 PSF	128.2 PSF	64.1 PSF	396.90 LB-FT	400.7 LB	871.3 LB	621.6 LB
24 "			161.1 PSF	80.5 PSF	161.1 PSF	80.5 PSF	140.9 PSF	70.4 PSF	140.9 PSF	70.4 PSF	120.8 PSF	60.4 PSF	120.8 PSF	60.4 PSF	100.6 PSF	50.3 PSF	100.6 PSF	50.3 PSF	396.90 LB-FT	314.6 LB	772.6 LB	607.0 LB
30 "			131.4 PSF	65.7 PSF	131.4 PSF	65.7 PSF	114.9 PSF	57.4 PSF	114.9 PSF	57.4 PSF	98.5 PSF	49.2 PSF	98.5 PSF	49.2 PSF	82.1 PSF	41.0 PSF	82.1 PSF	41.0 PSF	391.60 LB-FT	256.6 LB	700.8 LB	593.3 LB
18 "	36 "	6480 in²	126.9 PSF	63.4 PSF	126.9 PSF	63.4 PSF	124.6 PSF	62.3 PSF	124.6 PSF	62.3 PSF	106.8 PSF	53.4 PSF	106.8 PSF	53.4 PSF	89.0 PSF	44.5 PSF	89.0 PSF	44.5 PSF	396.90 LB-FT	400.7 LB	928.5 LB	678.8 LB
24 "			111.8 PSF	55.9 PSF	111.8 PSF	55.9 PSF	97.9 PSF	48.9 PSF	97.9 PSF	48.9 PSF	83.9 PSF	41.9 PSF	83.9 PSF	41.9 PSF	69.9 PSF	34.9 PSF	69.9 PSF	34.9 PSF	396.90 LB-FT	314.6 LB	817.6 LB	651.9 LB
30 "			91.2 PSF	45.6 PSF	91.2 PSF	45.6 PSF	79.8 PSF	39.9 PSF	79.8 PSF	39.9 PSF	68.4 PSF	34.2 PSF	68.4 PSF	34.2 PSF	57.0 PSF	28.5 PSF	57.0 PSF	28.5 PSF	391.60 LB-FT	256.6 LB	737.5 LB	629.9 LB
18 "	42 "	8820 in²	93.2 PSF	46.6 PSF	93.2 PSF	46.6 PSF	91.6 PSF	45.8 PSF	91.6 PSF	45.8 PSF	78.5 PSF	39.2 PSF	78.5 PSF	39.2 PSF	65.4 PSF	32.7 PSF	65.4 PSF	32.7 PSF	396.90 LB-FT	400.7 LB	985.8 LB	736.1 LB
24 "			82.2 PSF	41.1 PSF	82.2 PSF	41.1 PSF	71.9 PSF	35.9 PSF	71.9 PSF	35.9 PSF	61.6 PSF	30.8 PSF	61.6 PSF	30.8 PSF	51.3 PSF	25.6 PSF	51.3 PSF	25.6 PSF	396.90 LB-FT	314.6 LB	862.5 LB	696.9 LB
30 "			67.0 PSF	33.5 PSF	67.0 PSF	33.5 PSF	58.6 PSF	29.3 PSF	58.6 PSF	29.3 PSF	50.2 PSF	25.1 PSF	50.2 PSF	25.1 PSF	41.9 PSF	20.9 PSF	41.9 PSF	20.9 PSF	391.60 LB-FT	256.6 LB	774.2 LB	666.6 LB

HD 42" STAND DEPTH: MAX FACE AREA (2304in² - 7056in²), FRAME QUANTITY (4-7 FRAMES)

STAND HEIGHT	MAX MEAN UNIT HEIGHT	MAX FACE AREA	UNIT TO FRAME RATIO: MAX FACE AREA : 7 FRAMES, ANCHOR TYPE: 1 OR 4 — MAX ALLOWABLE LATERAL LOAD	MAX ALLOWABLE UPLIFT	ANCHORS TYPE: 2 OR 3 — MAX ALLOWABLE LATERAL LOAD	MAX ALLOWABLE UPLIFT	MAX FACE AREA : 6 FRAMES, ANCHOR TYPE: 1 OR 4 — MAX ALLOWABLE LATERAL LOAD	MAX ALLOWABLE UPLIFT	ANCHORS TYPE: 2 OR 3 — MAX ALLOWABLE LATERAL LOAD	MAX ALLOWABLE UPLIFT	MAX FACE AREA : 5 FRAMES, ANCHOR TYPE: 1 OR 4 — MAX ALLOWABLE LATERAL LOAD	MAX ALLOWABLE UPLIFT	ANCHORS TYPE: 2 OR 3 — MAX ALLOWABLE LATERAL LOAD	MAX ALLOWABLE UPLIFT	MAX FACE AREA : 4 FRAMES, ANCHOR TYPE: 1 OR 4 — MAX ALLOWABLE LATERAL LOAD	MAX ALLOWABLE UPLIFT	ANCHORS TYPE: 2 OR 3 — MAX ALLOWABLE LATERAL LOAD	MAX ALLOWABLE UPLIFT	LOAD TRANSFER INFORMATION FOR USE WITH HOST STRUCTURE VERIFICATION ONLY: MAX. BASE MOMENT (M)	MAX. BASE SHEAR (V)	MAX. BASE UPLIFT (T)	MAX. BASE GRAVITY (C)
18 "	24 "	2304 in²	200.0 PSF	100.0 PSF	200.0 PSF	100.0 PSF	200.0 PSF	100.0 PSF	200.0 PSF	100.0 PSF	200.0 PSF	100.0 PSF	200.0 PSF	100.0 PSF	200.0 PSF	100.0 PSF	200.0 PSF	100.0 PSF	396.20 LB-FT	400.0 LB	806.0 LB	563.5 LB
24 "			200.0 PSF	100.0 PSF	200.0 PSF	100.0 PSF	200.0 PSF	100.0 PSF	200.0 PSF	100.0 PSF	196.6 PSF	98.3 PSF	196.6 PSF	98.3 PSF	157.3 PSF	78.6 PSF	157.3 PSF	78.6 PSF	396.90 LB-FT	314.6 LB	723.7 LB	562.0 LB
30 "			200.0 PSF	100.0 PSF	200.0 PSF	100.0 PSF	192.4 PSF	96.2 PSF	192.4 PSF	96.2 PSF	160.4 PSF	80.2 PSF	160.4 PSF	80.2 PSF	128.3 PSF	64.1 PSF	128.3 PSF	64.1 PSF	391.60 LB-FT	256.6 LB	663.2 LB	556.6 LB
18 "	30 "	3600 in²	182.7 PSF	91.3 PSF	182.7 PSF	91.3 PSF	182.7 PSF	91.3 PSF	182.7 PSF	91.3 PSF	160.3 PSF	80.1 PSF	160.3 PSF	80.1 PSF	128.2 PSF	64.1 PSF	128.2 PSF	64.1 PSF	396.90 LB-FT	400.7 LB	869.4 LB	621.6 LB
24 "			176.2 PSF	88.1 PSF	176.2 PSF	88.1 PSF	151.0 PSF	75.5 PSF	151.0 PSF	75.5 PSF	125.8 PSF	62.9 PSF	125.8 PSF	62.9 PSF	100.6 PSF	50.3 PSF	100.6 PSF	50.3 PSF	396.90 LB-FT	314.6 LB	773.8 LB	607.0 LB
30 "			143.7 PSF	71.8 PSF	143.7 PSF	71.8 PSF	123.1 PSF	61.5 PSF	123.1 PSF	61.5 PSF	102.6 PSF	51.3 PSF	102.6 PSF	51.3 PSF	82.1 PSF	41.0 PSF	82.1 PSF	41.0 PSF	391.60 LB-FT	256.6 LB	702.0 LB	593.3 LB
18 "	36 "	5184 in²	126.9 PSF	63.4 PSF	126.9 PSF	63.4 PSF	126.9 PSF	63.4 PSF	126.9 PSF	63.4 PSF	111.3 PSF	55.6 PSF	111.3 PSF	55.6 PSF	89.0 PSF	44.5 PSF	89.0 PSF	44.5 PSF	396.90 LB-FT	400.7 LB	926.6 LB	678.8 LB
24 "			122.3 PSF	61.1 PSF	122.3 PSF	61.1 PSF	104.8 PSF	52.4 PSF	104.8 PSF	52.4 PSF	87.4 PSF	43.7 PSF	87.4 PSF	43.7 PSF	69.9 PSF	34.9 PSF	69.9 PSF	34.9 PSF	396.90 LB-FT	314.6 LB	818.8 LB	651.9 LB
30 "			99.8 PSF	49.9 PSF	99.8 PSF	49.9 PSF	85.5 PSF	42.7 PSF	85.5 PSF	42.7 PSF	71.2 PSF	35.6 PSF	71.2 PSF	35.6 PSF	57.0 PSF	28.5 PSF	57.0 PSF	28.5 PSF	391.60 LB-FT	256.6 LB	738.7 LB	629.9 LB
18 "	42 "	7056 in²	93.2 PSF	46.6 PSF	93.2 PSF	46.6 PSF	93.2 PSF	46.6 PSF	93.2 PSF	46.6 PSF	81.7 PSF	40.8 PSF	81.7 PSF	40.8 PSF	65.4 PSF	32.7 PSF	65.4 PSF	32.7 PSF	396.90 LB-FT	400.7 LB	983.9 LB	736.1 LB
24 "			89.9 PSF	44.9 PSF	89.9 PSF	44.9 PSF	77.0 PSF	38.5 PSF	77.0 PSF	38.5 PSF	64.2 PSF	32.1 PSF	64.2 PSF	32.1 PSF	51.3 PSF	25.6 PSF	51.3 PSF	25.6 PSF	396.90 LB-FT	314.6 LB	863.7 LB	696.9 LB
30 "			73.3 PSF	36.6 PSF	73.3 PSF	36.6 PSF	62.8 PSF	31.4 PSF	62.8 PSF	31.4 PSF	52.3 PSF	26.1 PSF	52.3 PSF	26.1 PSF	41.9 PSF	20.9 PSF	41.9 PSF	20.9 PSF	391.60 LB-FT	256.6 LB	775.4 LB	666.6 LB

HD 42" STAND DEPTH: MAX FACE AREA (1728in² - 5292in²), FRAME QUANTITY (3-6 FRAMES)

STAND HEIGHT	MAX MEAN UNIT HEIGHT	MAX FACE AREA	UNIT TO FRAME RATIO: MAX FACE AREA : 6 FRAMES, ANCHOR TYPE: 1 OR 4 — MAX ALLOWABLE LATERAL LOAD	MAX ALLOWABLE UPLIFT	ANCHORS TYPE: 2 OR 3 — MAX ALLOWABLE LATERAL LOAD	MAX ALLOWABLE UPLIFT	MAX FACE AREA : 5 FRAMES, ANCHOR TYPE: 1 OR 4 — MAX ALLOWABLE LATERAL LOAD	MAX ALLOWABLE UPLIFT	ANCHORS TYPE: 2 OR 3 — MAX ALLOWABLE LATERAL LOAD	MAX ALLOWABLE UPLIFT	MAX FACE AREA : 4 FRAMES, ANCHOR TYPE: 1 OR 4 — MAX ALLOWABLE LATERAL LOAD	MAX ALLOWABLE UPLIFT	ANCHORS TYPE: 2 OR 3 — MAX ALLOWABLE LATERAL LOAD	MAX ALLOWABLE UPLIFT	MAX FACE AREA : 3 FRAMES, ANCHOR TYPE: 1 OR 4 — MAX ALLOWABLE LATERAL LOAD	MAX ALLOWABLE UPLIFT	ANCHORS TYPE: 2 OR 3 — MAX ALLOWABLE LATERAL LOAD	MAX ALLOWABLE UPLIFT	LOAD TRANSFER INFORMATION FOR USE WITH HOST STRUCTURE VERIFICATION ONLY: MAX. BASE MOMENT (M)	MAX. BASE SHEAR (V)	MAX. BASE UPLIFT (T)	MAX. BASE GRAVITY (C)
18 "	24 "	1728 in²	200.0 PSF	100.0 PSF	200.0 PSF	100.0 PSF	200.0 PSF	100.0 PSF	200.0 PSF	100.0 PSF	200.0 PSF	100.0 PSF	200.0 PSF	100.0 PSF	200.0 PSF	100.0 PSF	200.0 PSF	100.0 PSF	396.20 LB-FT	400.0 LB	806.0 LB	563.5 LB
24 "			200.0 PSF	100.0 PSF	200.0 PSF	100.0 PSF	200.0 PSF	100.0 PSF	200.0 PSF	100.0 PSF	200.0 PSF	100.0 PSF	200.0 PSF	100.0 PSF	157.3 PSF	78.6 PSF	157.3 PSF	78.6 PSF	396.90 LB-FT	314.6 LB	719.2 LB	562.0 LB
30 "			200.0 PSF	100.0 PSF	200.0 PSF	100.0 PSF	200.0 PSF	100.0 PSF	200.0 PSF	100.0 PSF	171.0 PSF	85.5 PSF	171.0 PSF	85.5 PSF	128.3 PSF	64.1 PSF	128.3 PSF	64.1 PSF	391.60 LB-FT	256.6 LB	661.4 LB	556.6 LB
18 "	30 "	2700 in²	182.7 PSF	91.3 PSF	182.7 PSF	91.3 PSF	182.7 PSF	91.3 PSF	182.7 PSF	91.3 PSF	170.9 PSF	85.4 PSF	170.9 PSF	85.4 PSF	128.2 PSF	64.1 PSF	128.2 PSF	64.1 PSF	396.90 LB-FT	400.7 LB	870.5 LB	621.6 LB
24 "			182.7 PSF	91.3 PSF	182.7 PSF	91.3 PSF	167.8 PSF	83.9 PSF	167.8 PSF	83.9 PSF	134.2 PSF	67.1 PSF	134.2 PSF	67.1 PSF	100.6 PSF	50.3 PSF	100.6 PSF	50.3 PSF	396.90 LB-FT	314.6 LB	773.2 LB	607.0 LB
30 "			164.2 PSF	82.1 PSF	164.2 PSF	82.1 PSF	136.8 PSF	68.4 PSF	136.8 PSF	68.4 PSF	109.5 PSF	54.7 PSF	109.5 PSF	54.7 PSF	82.1 PSF	41.0 PSF	82.1 PSF	41.0 PSF	391.60 LB-FT	256.6 LB	703.7 LB	593.3 LB
18 "	36 "	3888 in²	126.9 PSF	63.4 PSF	126.9 PSF	63.4 PSF	126.9 PSF	63.4 PSF	126.9 PSF	63.4 PSF	118.7 PSF	59.3 PSF	118.7 PSF	59.3 PSF	89.0 PSF	44.5 PSF	89.0 PSF	44.5 PSF	396.90 LB-FT	400.7 LB	927.7 LB	678.8 LB
24 "			126.9 PSF	63.4 PSF	126.9 PSF	63.4 PSF	116.5 PSF	58.2 PSF	116.5 PSF	58.2 PSF	93.2 PSF	46.6 PSF	93.2 PSF	46.6 PSF	69.9 PSF	34.9 PSF	69.9 PSF	34.9 PSF	396.90 LB-FT	314.6 LB	818.1 LB	651.9 LB
30 "			114.0 PSF	57.0 PSF	114.0 PSF	57.0 PSF	95.0 PSF	47.5 PSF	95.0 PSF	47.5 PSF	76.0 PSF	38.0 PSF	76.0 PSF	38.0 PSF	57.0 PSF	28.5 PSF	57.0 PSF	28.5 PSF	391.60 LB-FT	256.6 LB	740.3 LB	629.9 LB
18 "	42 "	5292 in²	93.2 PSF	46.6 PSF	93.2 PSF	46.6 PSF	93.2 PSF	46.6 PSF	93.2 PSF	46.6 PSF	87.2 PSF	43.6 PSF	87.2 PSF	43.6 PSF	65.4 PSF	32.7 PSF	65.4 PSF	32.7 PSF	396.90 LB-FT	400.7 LB	985.0 LB	736.1 LB
24 "			93.2 PSF	46.6 PSF	93.2 PSF	46.6 PSF	85.6 PSF	42.8 PSF	85.6 PSF	42.8 PSF	68.5 PSF	34.2 PSF	68.5 PSF	34.2 PSF	51.3 PSF	25.6 PSF	51.3 PSF	25.6 PSF	396.90 LB-FT	314.6 LB	863.1 LB	696.9 LB
30 "			83.8 PSF	41.9 PSF	83.8 PSF	41.9 PSF	69.8 PSF	34.9 PSF	69.8 PSF	34.9 PSF	55.8 PSF	27.9 PSF	55.8 PSF	27.9 PSF	41.9 PSF	20.9 PSF	41.9 PSF	20.9 PSF	391.60 LB-FT	256.6 LB	777.0 LB	666.6 LB

DESIGN SCHEDULE NOTES:

1. MAXIMUM CALCULATED FACE AREA SHALL BE EQUAL TO OR LESS THAN THE MAXIMUM ALLOWABLE FACE AREA FOR EACH CONFIGURATION.
2. REFERENCE ANCHOR SCHEDULE FOR ANCHOR TYPES LISTED HEREIN.

FRANK L. BENNARDO, P.E.
#PE0046549
FRANK L. BENNARDO LICENSE No. 46549 08/21/2012 STATE OF FLORIDA PROFESSIONAL ENGINEER
ENGINEERING EXPRESS®
160 SW 12th AVENUE, #344
DEERFIELD BEACH, FL 33442
Ph: (954) 354-0660 Fax: (954) 354-0662
WWW.ENGEXP.COM
CERT OF AUTH #9885
A. FRANK L. BENNARDO, P.E., INC. INNOVATIVE

MIAMI TECH, INC
3611 NW 74TH STREET
MIAMI, FL 33147
PHONE:(305) 693-7054 FAX:(305) 693-6125

ALUMINUM A/C STAND
HVHZ COMPLAINT

REMARKS	DRWN	CHKD	DATE
INIT ISSUE	KL	CL	01/10/07
REV. TELESCOPIC BOLTS	KL	CL	05/03/07
UPDATE PER '07 FBC	TSB	CL	09/30/08
UPDATE PER '10 FBC	CSL	TSB	05/10/12
REV. PER COMMENTS	CSL	TSB	08/16/12

THIS DOCUMENT IS THE PROPERTY OF ENGINEERING EXPRESS AND SHALL NOT BE REPRODUCED IN WHOLE OR PART WITHOUT WRITTEN CONSENT OF THE CERTIFYING ENGINEER. ALTERATIONS, ADDITIONS, HIGHLIGHTING, OR OTHER MARKINGS TO THIS DOCUMENT ARE NOT PERMITTED AND INVALIDATE OUR CERTIFICATION.

COPYRIGHT ENGINEERING EXPRESS

12-MTI-01

SCALE: NTS 04

PAGE DESCRIPTION:
COVER SHEET
-

08/21/2012 - 11:58am TroyB F:\01 Project Files\Miami Tech (MTI)\2012\12-MTI-01-04b AC Stand NOA.dwg
N04 Revise per comments\12-MTI-01 Aluminum Telescopic Rooftop Stands\04 Revise

"HD" STAND DESIGN SCHEDULE CONTINUED

HD 42" STAND DEPTH: MAX FACE AREA (1152in² - 3528in²), FRAME QUANTITY (2-5 FRAMES)

UNIT TO FRAME RATIO

STAND HEIGHT	MAX MEAN UNIT HEIGHT	MAX FACE AREA	MAX FACE AREA : 5 FRAMES				MAX FACE AREA : 4 FRAMES				MAX FACE AREA : 3 FRAMES				MAX FACE AREA : 2 FRAMES				LOAD TRANSFER INFORMATION FOR USE WITH HOST STRUCTURE VERIFICATION ONLY			
			ANCHOR TYPE: 1 OR 4		ANCHORS TYPE: 2 OR 3		ANCHOR TYPE: 1 OR 4		ANCHORS TYPE: 2 OR 3		ANCHOR TYPE: 1 OR 4		ANCHORS TYPE: 2 OR 3		ANCHOR TYPE: 1 OR 4		ANCHORS TYPE: 2 OR 3					
			MAX ALLOWABLE LATERAL LOAD	MAX ALLOWABLE UPLIFT	MAX ALLOWABLE LATERAL LOAD	MAX ALLOWABLE UPLIFT	MAX ALLOWABLE LATERAL LOAD	MAX ALLOWABLE UPLIFT	MAX ALLOWABLE LATERAL LOAD	MAX ALLOWABLE UPLIFT	MAX ALLOWABLE LATERAL LOAD	MAX ALLOWABLE UPLIFT	MAX ALLOWABLE LATERAL LOAD	MAX ALLOWABLE UPLIFT	MAX ALLOWABLE LATERAL LOAD	MAX ALLOWABLE UPLIFT	MAX ALLOWABLE LATERAL LOAD	MAX ALLOWABLE UPLIFT	MAX. BASE MOMENT (M)	MAX. BASE SHEAR (V)	MAX. BASE UPLIFT (T)	MAX. BASE GRAVITY (C)
18 "	24 "	1152 in²	200.0 PSF	100.0 PSF	200.0 PSF	100.0 PSF	200.0 PSF	100.0 PSF	200.0 PSF	100.0 PSF	200.0 PSF	100.0 PSF	200.0 PSF	100.0 PSF	200.0 PSF	100.0 PSF	200.0 PSF	100.0 PSF	396.20 LB-FT	400.0 LB	806.0 LB	563.5 LB
24 "			200.0 PSF	100.0 PSF	200.0 PSF	100.0 PSF	200.0 PSF	100.0 PSF	200.0 PSF	100.0 PSF	200.0 PSF	100.0 PSF	200.0 PSF	100.0 PSF	157.3 PSF	78.6 PSF	157.3 PSF	78.6 PSF	396.90 LB-FT	314.6 LB	719.2 LB	562.0 LB
30 "			200.0 PSF	100.0 PSF	200.0 PSF	100.0 PSF	200.0 PSF	100.0 PSF	200.0 PSF	100.0 PSF	192.4 PSF	96.2 PSF	192.4 PSF	96.2 PSF	128.3 PSF	64.1 PSF	128.3 PSF	64.1 PSF	391.60 LB-FT	256.6 LB	663.2 LB	556.6 LB
18 "	30 "	1800 in²	182.7 PSF	91.3 PSF	182.7 PSF	91.3 PSF	182.7 PSF	91.3 PSF	182.7 PSF	91.3 PSF	182.7 PSF	91.3 PSF	182.7 PSF	91.3 PSF	128.2 PSF	64.1 PSF	128.2 PSF	64.1 PSF	396.90 LB-FT	400.7 LB	864.9 LB	621.6 LB
24 "			182.7 PSF	91.3 PSF	182.7 PSF	91.3 PSF	182.7 PSF	91.3 PSF	182.7 PSF	91.3 PSF	151.0 PSF	75.5 PSF	151.0 PSF	75.5 PSF	100.6 PSF	50.3 PSF	100.6 PSF	50.3 PSF	396.90 LB-FT	314.6 LB	771.7 LB	607.0 LB
30 "			182.7 PSF	91.3 PSF	182.7 PSF	91.3 PSF	164.2 PSF	82.1 PSF	164.2 PSF	82.1 PSF	123.1 PSF	61.5 PSF	123.1 PSF	61.5 PSF	82.1 PSF	41.0 PSF	82.1 PSF	41.0 PSF	391.60 LB-FT	256.6 LB	703.7 LB	593.3 LB
18 "	36 "	2592 in²	126.9 PSF	63.4 PSF	126.9 PSF	63.4 PSF	126.9 PSF	63.4 PSF	126.9 PSF	63.4 PSF	126.9 PSF	63.4 PSF	126.9 PSF	63.4 PSF	89.0 PSF	44.5 PSF	89.0 PSF	44.5 PSF	396.90 LB-FT	400.7 LB	922.1 LB	678.8 LB
24 "			126.9 PSF	63.4 PSF	126.9 PSF	63.4 PSF	126.9 PSF	63.4 PSF	126.9 PSF	63.4 PSF	104.8 PSF	52.4 PSF	104.8 PSF	52.4 PSF	69.9 PSF	34.9 PSF	69.9 PSF	34.9 PSF	396.90 LB-FT	314.6 LB	816.6 LB	651.9 LB
30 "			126.9 PSF	63.4 PSF	126.9 PSF	63.4 PSF	114.0 PSF	57.0 PSF	114.0 PSF	57.0 PSF	85.5 PSF	42.7 PSF	85.5 PSF	42.7 PSF	57.0 PSF	28.5 PSF	57.0 PSF	28.5 PSF	391.60 LB-FT	256.6 LB	740.3 LB	629.9 LB
18 "	42 "	3528 in²	93.2 PSF	46.6 PSF	93.2 PSF	46.6 PSF	93.2 PSF	46.6 PSF	93.2 PSF	46.6 PSF	93.2 PSF	46.6 PSF	93.2 PSF	46.6 PSF	65.4 PSF	32.7 PSF	65.4 PSF	32.7 PSF	396.90 LB-FT	400.7 LB	979.4 LB	736.1 LB
24 "			93.2 PSF	46.6 PSF	93.2 PSF	46.6 PSF	93.2 PSF	46.6 PSF	93.2 PSF	46.6 PSF	77.0 PSF	38.5 PSF	77.0 PSF	38.5 PSF	51.3 PSF	25.6 PSF	51.3 PSF	25.6 PSF	396.90 LB-FT	314.6 LB	861.6 LB	696.9 LB
30 "			93.2 PSF	46.6 PSF	93.2 PSF	46.6 PSF	83.8 PSF	41.9 PSF	83.8 PSF	41.9 PSF	62.8 PSF	31.4 PSF	62.8 PSF	31.4 PSF	41.9 PSF	20.9 PSF	41.9 PSF	20.9 PSF	391.60 LB-FT	256.6 LB	777.0 LB	666.6 LB

HD 42" STAND DEPTH: MAX FACE AREA (576in² - 1764in²), FRAME QUANTITY (2-3 FRAMES)

UNIT TO FRAME RATIO

STAND HEIGHT	MAX MEAN UNIT HEIGHT	MAX FACE AREA	MAX FACE AREA : 3 FRAMES				MAX FACE AREA : 2 FRAMES				LOAD TRANSFER INFORMATION FOR USE WITH HOST STRUCTURE VERIFICATION ONLY			
			ANCHOR TYPE: 1 OR 4		ANCHOR TYPE: 2 OR 3		ANCHOR TYPE: 1 OR 4		ANCHOR TYPE: 2 OR 3					
			MAX ALLOWABLE LATERAL LOAD	MAX ALLOWABLE UPLIFT	MAX ALLOWABLE LATERAL LOAD	MAX ALLOWABLE UPLIFT	MAX ALLOWABLE LATERAL LOAD	MAX ALLOWABLE UPLIFT	MAX ALLOWABLE LATERAL LOAD	MAX ALLOWABLE UPLIFT	MAX. BASE MOMENT (M)	MAX. BASE SHEAR (V)	MAX. BASE UPLIFT (T)	MAX. BASE GRAVITY (C)
18 "	24 "	576 in²	200.0 PSF	100.0 PSF	200.0 PSF	100.0 PSF	200.0 PSF	100.0 PSF	200.0 PSF	100.0 PSF	198.10 LB-FT	200.0 LB	403.0 LB	281.7 LB
24 "			200.0 PSF	100.0 PSF	200.0 PSF	100.0 PSF	200.0 PSF	100.0 PSF	200.0 PSF	100.0 PSF	252.30 LB-FT	200.0 LB	460.1 LB	338.9 LB
30 "			200.0 PSF	100.0 PSF	200.0 PSF	100.0 PSF	200.0 PSF	100.0 PSF	200.0 PSF	100.0 PSF	305.20 LB-FT	200.0 LB	517.3 LB	396.0 LB
18 "	30 "	900 in²	182.7 PSF	91.3 PSF	182.7 PSF	91.3 PSF	182.7 PSF	91.3 PSF	182.7 PSF	91.3 PSF	282.80 LB-FT	285.5 LB	621.0 LB	414.2 LB
24 "			182.7 PSF	91.3 PSF	182.7 PSF	91.3 PSF	182.7 PSF	91.3 PSF	182.7 PSF	91.3 PSF	360.20 LB-FT	285.5 LB	702.6 LB	495.8 LB
30 "			182.7 PSF	91.3 PSF	182.7 PSF	91.3 PSF	164.2 PSF	82.1 PSF	164.2 PSF	82.1 PSF	391.60 LB-FT	256.6 LB	703.7 LB	525.8 LB
18 "	36 "	1296 in²	126.9 PSF	63.4 PSF	126.9 PSF	63.4 PSF	126.9 PSF	63.4 PSF	126.9 PSF	63.4 PSF	282.80 LB-FT	285.5 LB	661.8 LB	455.0 LB
24 "			126.9 PSF	63.4 PSF	126.9 PSF	63.4 PSF	126.9 PSF	63.4 PSF	126.9 PSF	63.4 PSF	360.20 LB-FT	285.5 LB	743.4 LB	536.6 LB
30 "			126.9 PSF	63.4 PSF	126.9 PSF	63.4 PSF	114.0 PSF	57.0 PSF	114.0 PSF	57.0 PSF	391.60 LB-FT	256.6 LB	740.3 LB	562.4 LB
18 "	42 "	1764 in²	93.2 PSF	46.6 PSF	93.2 PSF	46.6 PSF	93.2 PSF	46.6 PSF	93.2 PSF	46.6 PSF	282.80 LB-FT	285.5 LB	702.6 LB	495.8 LB
24 "			93.2 PSF	46.6 PSF	93.2 PSF	46.6 PSF	93.2 PSF	46.6 PSF	93.2 PSF	46.6 PSF	360.20 LB-FT	285.5 LB	784.2 LB	577.4 LB
30 "			93.2 PSF	46.6 PSF	93.2 PSF	46.6 PSF	83.8 PSF	41.9 PSF	83.8 PSF	41.9 PSF	391.60 LB-FT	256.6 LB	777.0 LB	599.1 LB

DESIGN SCHEDULE NOTES:

1. MAXIMUM CALCULATED FACE AREA SHALL BE EQUAL TO OR LESS THAN THE MAXIMUM ALLOWABLE FACE AREA FOR EACH CONFIGURATION.
2. REFERENCE ANCHOR SCHEDULE FOR ANCHOR TYPES LISTED HEREIN.

"CUSTOM ASSEMBLY" DESIGN SCHEDULE

CUSTOM ASSEMBLY ALLOWABLE CONFIGURATIONS:

1 UNITS:2 FRAME CONFIGURATION

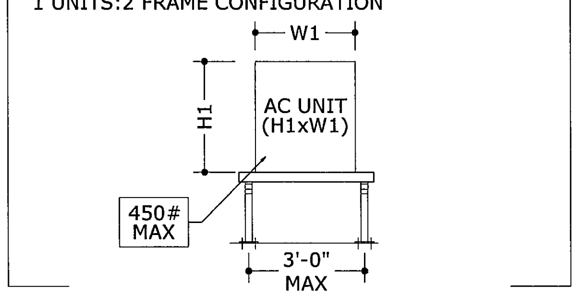

2 UNITS:3 FRAME CONFIGURATION

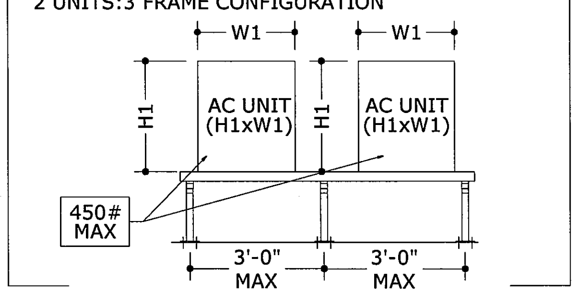

NOTE: FOR THE "CUSTOM ASSEMBLY" STANDS, THE NUMBER OF UNITS PER STAND IS RESTRICTED TO THE CONFIGURATIONS ILLUSTRATED ABOVE. SEE DESIGN SCHEDULE FOR MORE INFORMATION.

30" STAND DEPTH: CUSTOM ASSEMBLY FOR 30" H , 30"D, 54"H

MAX. UNIT WIDTH	MAX. UNIT DEPTH	MAX. UNIT HEIGHT	STAND CLEAR HEIGHT	(1) UNITS TO (2) FRAMES				(2) UNITS TO (3) FRAMES			
				ANCHOR TYPE: 1 OR 4		ANCHOR TYPE: 2 OR 3		ANCHOR TYPE: 1 OR 4		ANCHOR TYPE: 2 OR 3	
				MAX ALLOWABLE LATERAL LOAD	MAX ALLOWABLE UPLIFT	MAX ALLOWABLE LATERAL LOAD	MAX ALLOWABLE UPLIFT	MAX ALLOWABLE LATERAL LOAD	MAX ALLOWABLE UPLIFT	MAX ALLOWABLE LATERAL LOAD	MAX ALLOWABLE UPLIFT
30 "	30 "	54 "	18 "	93.0 PSF	46.5 PSF	93.0 PSF	46.5 PSF	93.0 PSF	46.5 PSF	93.0 PSF	46.5 PSF
			24 "	93.0 PSF	46.5 PSF	93.0 PSF	46.5 PSF	71.5 PSF	35.8 PSF	71.5 PSF	35.8 PSF
			30 "	72.5 PSF	36.3 PSF	72.5 PSF	36.3 PSF	54.5 PSF	27.3 PSF	54.5 PSF	27.3 PSF

DESIGN SCHEDULE NOTES:

1. MAXIMUM UNIT DIMENSIONS SHALL CONFORM TO THE DIMENSIONS ILLUSTRATED ABOVE FOR EACH CONFIGURATION.
2. REFERENCE ANCHOR SCHEDULE FOR ANCHOR TYPES LISTED HEREIN.

PRODUCT REVISED as complying with the Florida Building Code Acceptance No 12-0612.29 Expiration Date 01/15/2014 By [signature] Miami Dade Product Control

FRANK L. BENNARDO, P.E. PE0046549 — FRANK L. BENNARDO LICENSE No. 46549 08/21/2012 STATE OF FLORIDA PROFESSIONAL ENGINEER

ENGINEERING EXPRESS
160 SW 12th AVENUE, SUITE 106
DEERFIELD BEACH, FL 33442
PH: (954) 354-0660 Fax: (954) 354-0443
WWW.ENGEXP.COM
CERT OF AUTH #9885
A FRANK L. BENNARDO, P.E., INC. INNOVATION

MIAMI TECH, INC
3611 NW 74TH STREET
MIAMI, FL 33147
PHONE:(305) 693-7054 FAX:(305) 693-6125

ALUMINUM A/C STAND
HVHZ COMPLIANT

REMARKS	DRWN	CHKD	DATE
INIT ISSUE	KL	CL	01/10/07
REV. TELESCOPIC BOLTS	KL	CL	05/03/07
UPDATE PER '07 FBC	TSB	CL	09/30/08
UPDATE PER '10 FBC	CSL	TSB	05/10/12
REV. PER COMMENTS	CSL	TSB	08/16/12

THIS DOCUMENT IS THE PROPERTY OF ENGINEERING EXPRESS AND SHALL NOT BE REPRODUCED IN WHOLE OR PART WITHOUT WRITTEN CONSENT OF THE CERTIFYING ENGINEER. ALTERATIONS, ADDITIONS, HIGHLIGHTING, OR OTHER MARKINGS TO THIS DOCUMENT ARE NOT PERMITTED AND INVALIDATE OUR CERTIFICATION.

COPYRIGHT ENGINEERING EXPRESS

12-MTI-01
SCALE: NTS 04
PAGE DESCRIPTION: COVER SHEET

08/21/2012 - 11:58am TroyB F:\01 Project Files\Miami Tech (MTI)\2012\12-MTI-01 Aluminum Telescopic Rooftop Stands\04 Revise per comments\12-MTI-01-04b AC Stand NOA.dwg

FRAME ASSEMBLY & UNIT TIE-DOWN DETAILS:

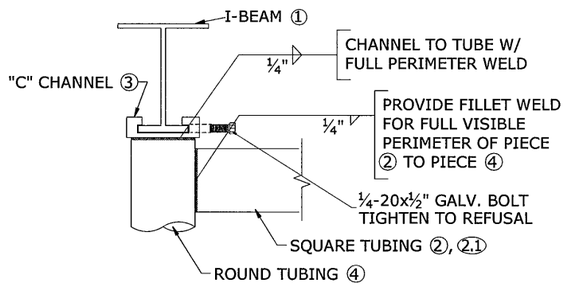

1/9 FRAME ASSEMBLY DETAIL

3" = 1'-0" DETAIL

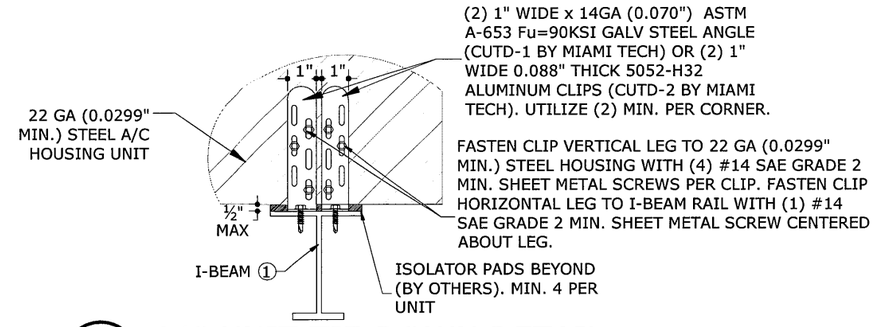

2/9 A/C UNIT TIE-DOWN DETAIL

SCALE: 3"=1'-0"

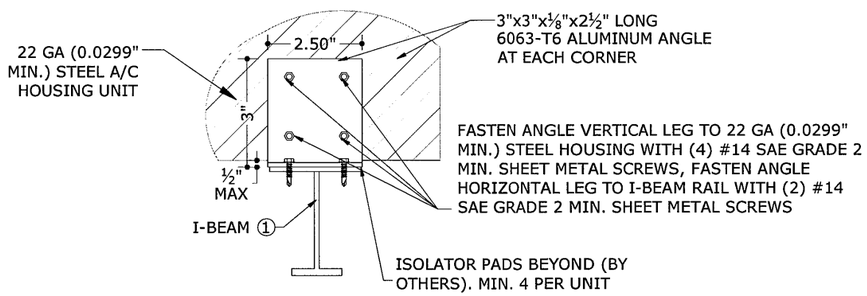

3/9 A/C UNIT TIE-DOWN DETAIL

SCALE: 3"=1'-0"

NOTE: UNIT TIEDOWN DETAILS MAY ALSO BE USED TO ANCHOR THE UNIT TO THE SUPPORT ANGLE SHOWN ON SHEET 10. (I.E. I-BEAM CAN BE SUBSTITUTED WITH ANGLE SUPPORT AS BASE MATERIAL)

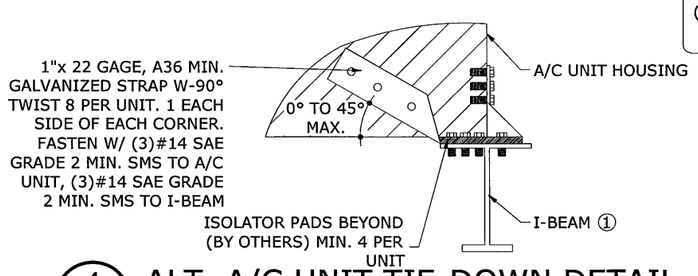

4/9 ALT. A/C UNIT TIE-DOWN DETAIL

SCALE: 3"=1'-0"

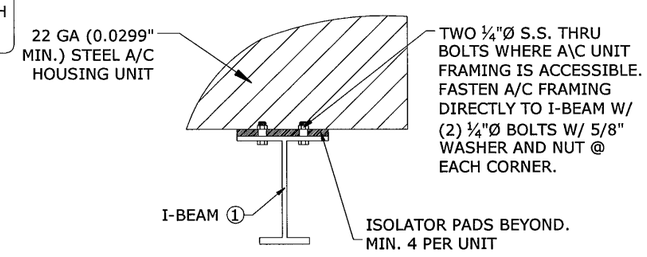

5/9 ALT. A/C UNIT TIE-DOWN DETAIL

SCALE: 3"=1'-0"

PRODUCT REVISED
as complying with the Florida Building Code
Acceptance No 12-0612.29
Expiration Date 01/15/2014
By
Miami Dade Product Control

FRANK L. BENNARDO LICENSE No. 46549 STATE OF FLORIDA PROFESSIONAL ENGINEER
08/21/2012

FRANK L. BENNARDO, P.E.
PE0046549
ENGINEERING EXPRESS
160 SW 12th AVENUE, #14-04
DEERFIELD BEACH, FL 33442
Ph: (954) 354-0660 FAX: (954) 354-0404
WWW.ENGEXP.COM
CERT OF AUTH #9885
A. FRANK L. BENNARDO, P.E., INC. INNOVATIVE

MIAMI TECH, INC
3611 NW 74TH STREET
MIAMI, FL 33147
PHONE:(305) 693-7054 FAX:(305) 693-6125

ALUMINUM A/C STAND
HVHZ COMPLAINT

REMARKS	DRWN	CHKD	DATE
INIT ISSUE	KL	CL	01/10/07
REV. TELESCOPIC BOLTS	KL	CL	05/03/07
UPDATE PER '07 FBC	TSB	CL	09/30/08
UPDATE PER '10 FBC	CSL	TSB	05/10/12
REV. PER COMMENTS	CSL	TSB	08/16/12

THIS DOCUMENT IS THE PROPERTY OF ENGINEERING EXPRESS AND SHALL NOT BE REPRODUCED IN WHOLE OR PART WITHOUT WRITTEN CONSENT OF THE CERTIFYING ENGINEER. ALTERATIONS, ADDITIONS, HIGHLIGHTING, OR OTHER MARKINGS TO THIS DOCUMENT ARE NOT PERMITTED AND INVALIDATE COA CERTIFICATION.

COPYRIGHT ENGINEERING EXPRESS

12-MTI-01

SCALE: NTS 04

PAGE DESCRIPTION:
COVER SHEET

9 OF 10

08/21/2012 - 11:58am TroyB F:\01 Project Files\Miami Tech (MTI)\2012\12-MTI-01 Aluminum Telescopic Rooftop Stands\04 Revise per comments\12-MTI-01-04b AC Stand NOA.dwg

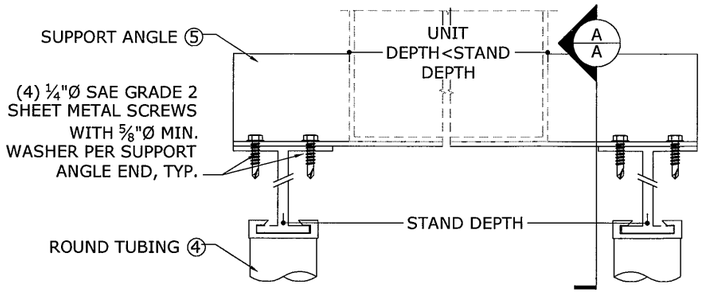

SUPPORT ANGLE ATTACHMENT DETAIL

1/10 — 3" = 1'-0"

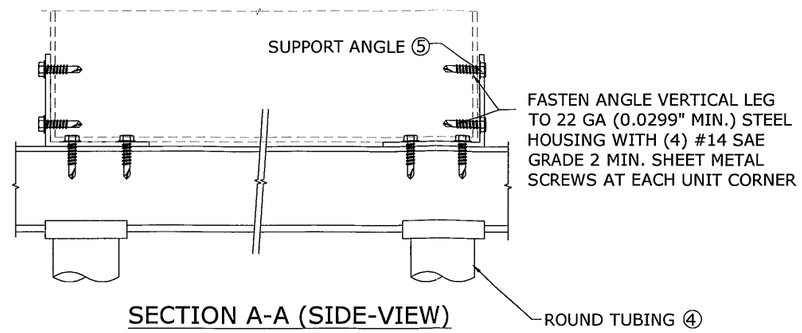

SECTION A-A (SIDE-VIEW)

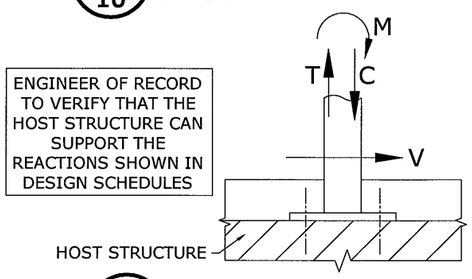

BASE PLATE REACTIONS

2/10 — 3" = 1'-0"

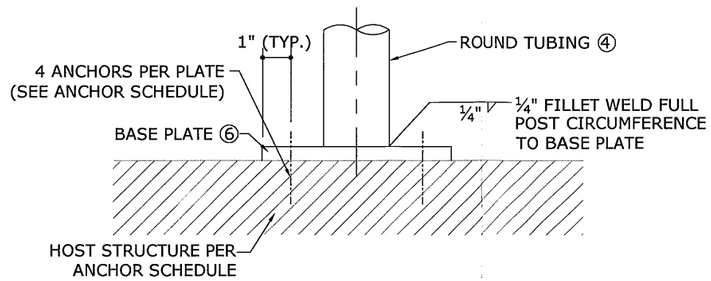

STANDARD BASE PLATE ATTACHMENT DETAIL

3/10 — SCALE: 3"=1'-0"

ANCHOR SCHEDULE

ANCHOR TYPE	HOST STRUCTURE	ANCHOR DESCRIPTION
1	STEEL	3/8"Ø SAE GRADE 5 SHEET METAL SCREWS WITH 1"Ø MIN. WASHER, TO STRUCTURAL A36 STEEL MEMBERS (3/16" MIN HOST THICKNESS)
2	CONCRETE	3/8"Ø POWERS CARBON STEEL WEDGE-BOLT CONCRETE ANCHOR WITH 1"Ø MIN. WASHER, 3-1/2" EMBEDMENT & 6" MIN EDGE DISTANCE, SEE BASE PLATE COMPONENT #6 (ON SHEET 2) FOR TYPICAL ANCHOR SPACING.
3	WOOD*	**STANDARD BASE PLATE ATTACHMENT DETAIL 3/10** : 1/2"Ø SAE GRADE 5 LAG SCREW WITH 1"Ø MIN. WASHER, 3-1/2" MIN THREAD PENETRATION TO WOOD FRAMING & MIN 1" EDGE DISTANCE (NOT INTENDED FOR INSTALLATIONS TO 2X MEMBERS). ***SEE DETAIL 4/10** FOR AN ALTERNATE BASE PLATE ATTACHMENT AT WOOD TRUSS MEMBERS IF ANCHOR THREAD PENETRATION & EDGE DISTANCE AS STATED HERE IN CAN NOT BE SATISFIED.
4	STEEL	3/8"Ø SAE GRADE 5 THRUBOLT WITH 1"Ø MIN. WASHER & NUT, TO STRUCTURAL A36 STEEL MEMBERS (3/16" MIN HOST THICKNESS)

ANCHOR NOTES:

1. ANCHORS SHALL BE INSTALLED IN ACCORDANCE WITH MANUFACTURERS' RECOMMENDATIONS.
2. ENSURE MINIMUM EDGE DISTANCE AS NOTED IN ANCHOR SCHEDULE FOR EACH ANCHOR.
3. WOOD HOST STRUCTURE SHALL BE "SOUTHERN PINE" G=0.55 OR GREATER DENSITY. ALL CONCRETE SUBSTRATE SHALL BE UN-CRACKED CONCRETE AND SHALL HAVE MINIMUM COMPRESSIVE STRENGTH OF 3000 PSI. CONCRETE SUBSTRATE THICKNESS SHALL BE GREATER THAN OR EQUAL TO 1.5xANCHOR EMBEDMENT. INSTALL CONCRETE ANCHORS TO UN-CRACKED CONCRETE ONLY.
4. MINIMUM EMBEDMENT SHALL BE AS NOTED IN ANCHOR SCHEDULE. MINIMUM EMBEDMENT AND EDGE DISTANCE EXCLUDES ROOFING FINISHES.
5. WHERE EXISTING STRUCTURE IS WOOD TRUSSES, EXISTING CONDITIONS MAY VARY. FIELD VERIFY THAT FASTENERS ARE INTO ADEQUATE WOOD TRUSS MEMBERS, NOT INTO PLYWOOD.

PRODUCT REVISED
as complying with the Florida Building Code
Acceptance No 12-0612.29
Expiration Date 01/15/2014
By
Miami Dade Product Control

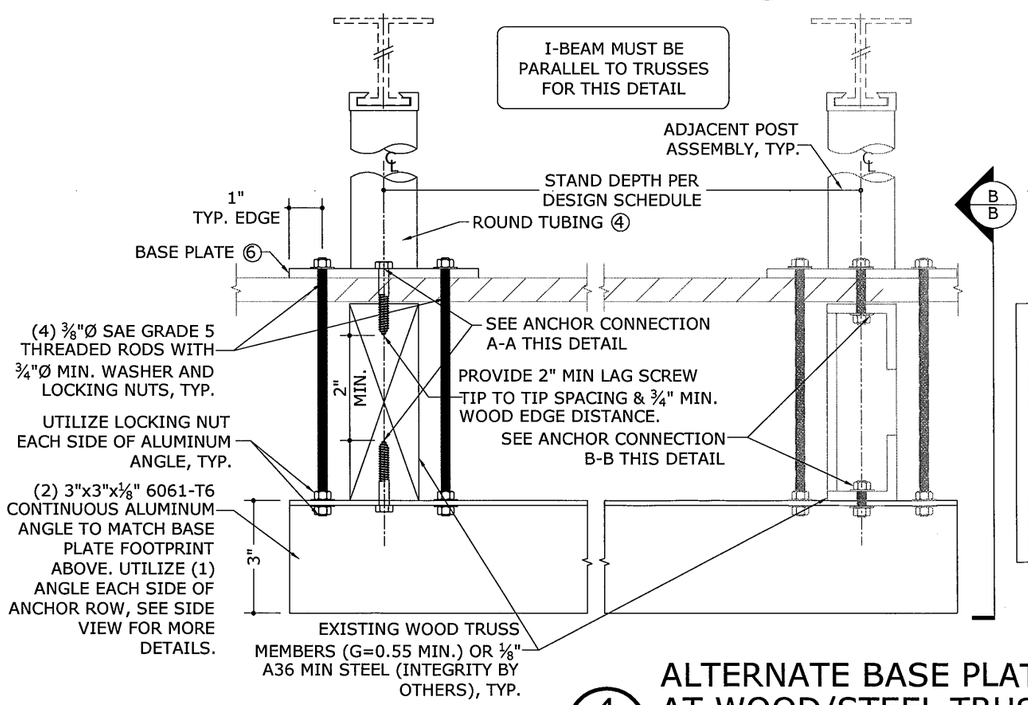

ANCHOR A-A (WOOD MEMBER)
ADD (4) ¼"Ø LAG SCREW, ⅝"Ø MIN. WASHER, 3½" MIN. EMBED, ¾" MIN. EDGE DISTANCE. UTILIZE (2) TOP AND (2) BOTTOM, TYP.

ANCHOR B-B (STEEL MEMBER)
ADD (4) ⅜"Ø THRUBOLT,¾"Ø MIN. WASHER AND LOCKING NUT. UTILIZE (2) TOP AND (2) BOTTOM, TYP.

ALTERNATE BASE PLATE ATTACHMENT AT WOOD/STEEL TRUSS MEMBERS

4/10 — SCALE: 3"=1'-0"

DETAIL

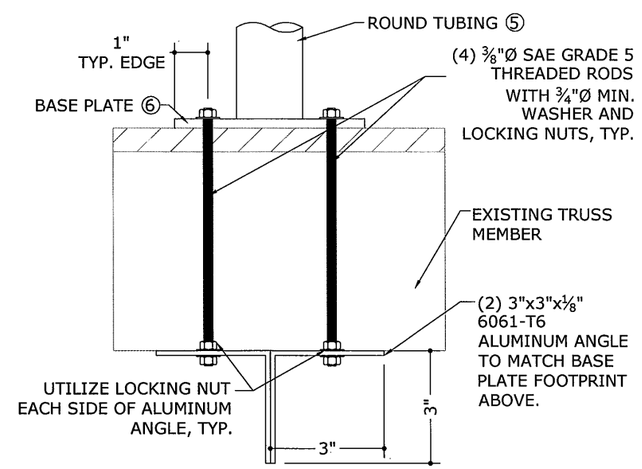

SECTION B-B (SIDE-VIEW)

FRANK L. BENNARDO, JR., P.E.
PE0046549
STATE OF FLORIDA
LICENSED PROFESSIONAL ENGINEER
08/21/2012
ENGINEERING EXPRESS
160 SW 12th AVENUE, #101
DEERFIELD BEACH, FL 33442
Ph: (954) 354-0660 Fax: (954) 354-0673
WWW.ENGEXP.COM
CERT OF AUTH #9885
A. FRANK L. BENNARDO, P.E., INC. INNOVATION

MIAMI TECH, INC
3611 NW 74TH STREET
MIAMI, FL 33147
PHONE:(305) 693-7054 FAX:(305) 693-6125

ALUMINUM A/C STAND
HVHZ COMPLAINT

REMARKS	DRWN	CHKD	DATE
INIT ISSUE	KL	CL	01/10/07
REV. TELESCOPIC BOLTS	KL	CL	05/03/07
UPDATE PER '07 FBC	TSB	CL	09/30/08
UPDATE PER '10 FBC	CSL	TSB	05/10/12
REV. PER COMMENTS	CSL	TSB	08/16/12

THE INFORMATION, DESIGNS AND SPECIFICATIONS CONTAINED HEREIN ARE THE PROPERTY OF ENGINEERING EXPRESS AND SHALL NOT BE REPRODUCED IN WHOLE OR PART WITHOUT WRITTEN CONSENT OF THE CERTIFYING ENGINEER. ALTERATIONS, ADDITIONS, HIGHLIGHTING, OR OTHER MARKINGS TO THIS DOCUMENT ARE NOT PERMITTED AND INVALIDATE OUR CERTIFICATION.
COPYRIGHT ENGINEERING EXPRESS

12-MTI-01

SCALE: NTS 04

PAGE DESCRIPTION:
COVER SHEET
-

10 OF 10