MIAMI-DADE COUNTY
PRODUCT CONTROL SECTION
11805 SW 26 Street, Room 208
Miami, Florida 33175-2474
T (786) 315-2590 F (786) 315-2599
www.miamidade.gov/economy

DEPARTMENT OF REGULATORY AND ECONOMIC RESOURCES (RER)
BOARD AND CODE ADMINISTRATION DIVISION

NOTICE OF ACCEPTANCE (NOA)

Hartman Windows & Doors, LLC
531 Southern Blvd.
West Palm Beach, Fl. 33405

SCOPE:

This NOA is being issued under the applicable rules and regulations governing the use of construction materials. The documentation submitted has been reviewed and accepted by Miami-Dade County RER -Product Control Section to be used in Miami Dade County and other areas where allowed by the Authority Having Jurisdiction (AHJ).

This NOA shall not be valid after the expiration date stated below. The Miami-Dade County Product Control Section (In Miami Dade County) and/or the AHJ (in areas other than Miami Dade County) reserve the right to have this product or material tested for quality assurance purposes. If this product or material fails to perform in the accepted manner, the manufacturer will incur the expense of such testing and the AHJ may immediately revoke, modify, or suspend the use of such product or material within their jurisdiction. RER reserves the right to revoke this acceptance, if it is determined by Miami-Dade County Product Control Section that this product or material fails to meet the requirements of the applicable building code.

This product is approved as described herein, and has been designed to comply with the Florida Building Code, including the High Velocity Hurricane Zone.

DESCRIPTION: Series "American" Outswing Glazed Wood Patio Doors

APPROVAL DOCUMENT: Drawing No **W07-93 Rev C**, titled "American" Outswing Wood Patio Doors" Sheets 1 through 10 of 10, dated 11-05-07 and last revised on OCT 04, 2012, prepared by Al-Farooq Corporation, signed and sealed by Javad Ahmad, P.E., bearing the Miami-Dade County Product Control Revision stamp with the Notice of Acceptance number and expiration date by the Miami-Dade County Product Control Section.

MISSILE IMPACT RATING: Large and Small Impact

Limitations:

1. Wood material in direct contact with masonry or concrete shall be treated with approved preservative or approved durable species complying w/ chapter 23 of FBC.
2. Max raised panel is limited =38"WX42" H panel (Min thickness of raised panel=1-3/4" min ½" bites).

LABELING: Each unit shall bear a permanent label with the manufacturer's name or logo, city, state and series and following statement: "Miami-Dade County Product Control Approved", noted herein.

RENEWAL of this NOA shall be considered after a renewal application has been filed and there has been no change in the applicable building code negatively affecting the performance of this product.

TERMINATION of this NOA will occur after the expiration date or if there has been a revision or change in the materials, use, and/or manufacture of the product or process. Misuse of this NOA as an endorsement of any product, for sales, advertising or any other purposes shall automatically terminate this NOA. Failure to comply with any section of this NOA shall be cause for termination and removal of NOA.

ADVERTISEMENT: The NOA number preceded by the words Miami-Dade County, Florida, and followed by the expiration date may be displayed in advertising literature. If any portion of the NOA is displayed, then it shall be done in its entirety.

INSPECTION: A copy of this entire NOA shall be provided to the user by the manufacturer or its distributors and shall be available for inspection at the job site at the request of the Building Official.

This NOA **revises NOA # 08-0603.07** and consists of this page 1 and evidence pages E-1, as well as approval document mentioned above.

The submitted documentation was reviewed by **Ishaq I. Chanda, P.E.**

MIAMI-DADE COUNTY APPROVED

10/5/14

NOTICE OF ACCEPTANCE: EVIDENCE SUBMITTED

A. DRAWINGS

1. Manufacturer's die drawings and sections (submitted under file # **08-0603.07**)
2. Drawing No **W07-93 Rev C**, titled "American" Outswing Wood Patio Doors" Sheets 1 through 10 of 10, dated 11-05-07 and last revised on OCT 04, 2012, prepared by Al-Farooq Corporation, signed and sealed by Javad Ahmad, P.E. (Note: This revision consists of FBC 2010 notes only).

B. TESTS (submitted under file # **08-0603.07)**

1. Test reports on: 1) Air Infiltration Test, per FBC, TAS 202-94
   2) Uniform Static Air Pressure Test, Loading per FBC TAS 202-94
   3) Water Resistance Test, per FBC, TAS 202-94
   4) Large Missile Impact Test per FBC, TAS 201-94
   5) Cyclic Wind Pressure Loading per FBC, TAS 203-94
   6) Forced Entry Test, per FBC 2411 3.2.1, TAS 202-94

Along with installation diagram of outswing wood doors & wood doors w/ sidelites & transom marked-up by Hurricane Testing Laboratory, Inc., Test Report No. **HTL-0137-0215.05** dated **02**/21-24/05 and **HTL-0137-0328.05** dated **03**/30/05, both signed and sealed by Vinu Abraham, P.E.
Note: Addendum letter dated 07/30/08, issued by HTL, signed and sealed by Vinu Abraham, P.E.

2. Additional test reports on Test reports on
   1) Air Infiltration Test, per FBC, TAS 202-94
   2) Uniform Static Air Pressure Test, Loading per FBC, TAS 202-94
   3) Water Resistance Test, per FBC, TAS 202-94
   4) Large Missile Impact Test per FBC, TAS 201-94
   5) Cyclic Wind Pressure Loading per FBC, TAS 203-94
   6) Forced Entry Test, per FBC 2411 3.2.1 and TAS 202-94

Along with marked-up drawings and installation diagram of an inswing wood door w/ sidelites, prepared by Fenestration Testing Lab Inc., Test Report No. **FTL 5294 (FTL07083)**, dated 08/21/07, signed and sealed by Carlos S. Roinda, P.E.

C. CALCULATIONS

1. Anchor verification calculations and structural analysis, complying with FBC-2010, prepared by Al Farooq Corporation, dated 05/31/12 and last revised on 10-04-12, signed and sealed by Javad Ahmad, P.E.

D. QUALITY ASSURANCE

1. Miami Dade Department of Regulatory and Economic Resources (RER).

E. MATERIAL CERTIFICATIONS

1. Notice of Acceptance No. **11-0624.02** issued to E.I. DuPont DeNemours & Co., Inc. for their "**DuPont Sentry Glass ® interlayer**", expiring on 01/14/17.
2. Notice of Acceptance No. **08-1224.04,** issued to Solutia, Inc. for "Saflex Composites Glass Interlayer w/ PET core", expiring on 12/11/13.

F. STATEMENTS

1. Statement letter of conformance and letter of no financial interest, prepared by Al Farooq Corporation, dated 05/14/12, signed and sealed by Javad Ahmad, P.E.
2. Lab compliance statement, as part of the above referenced test reports.

G. OTHER

1. This NOA **revises** NOA # **08-0603.07**, expiring on OCT 23, 2013.
2. Test proposal dated 05/15/06 approved by BCCO.
3. Assets Purchase Agreement dated Jan 17, 2002 between Hartman Windows & Doors, LLC and Platinum Industries Inc. (submitted under file # **08-0603.07)** Ishaq I. Chanda

Ishaq I. Chanda, P.E.
Product Control Examiner
NOA No. 12-0614.03
Expiration Date: October 23, 2013
Approval Date: October 11, 2012

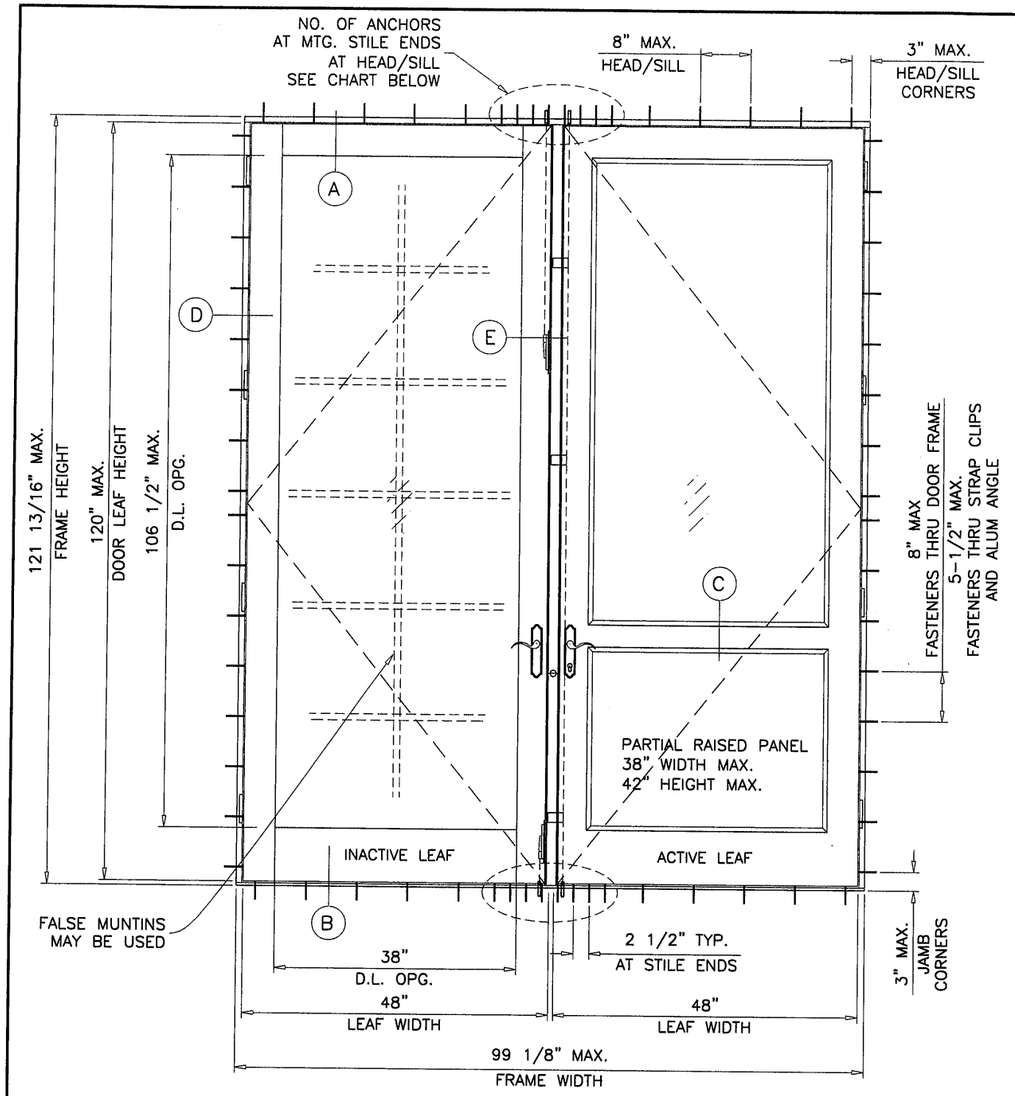

XX

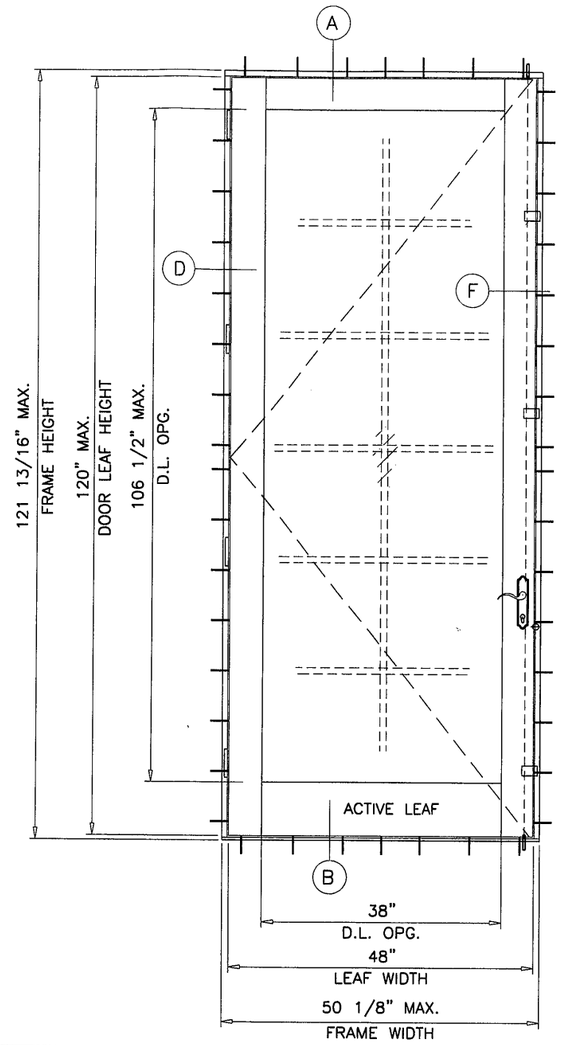

X

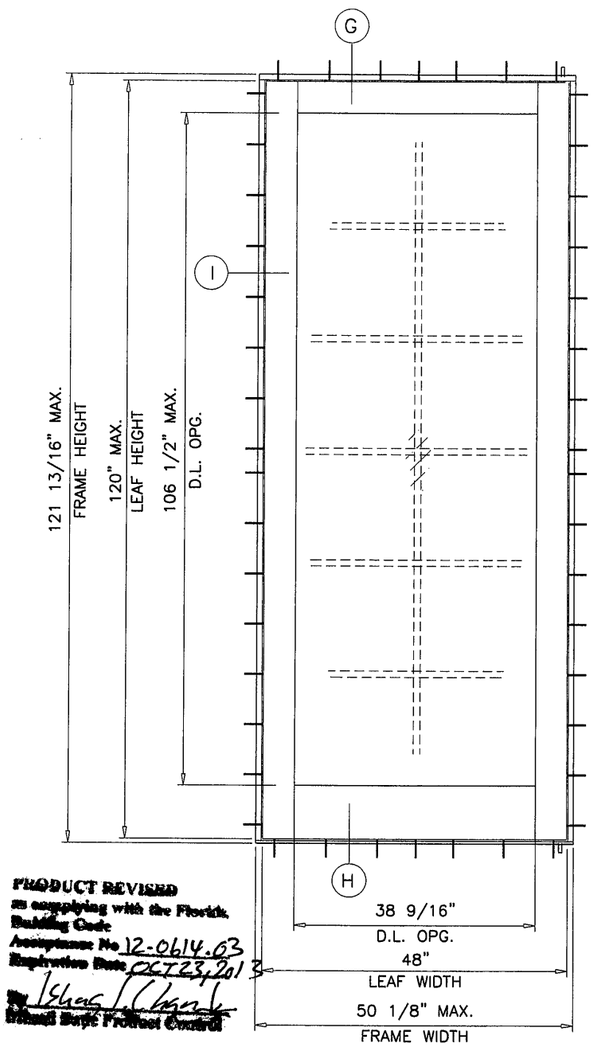

O (FIXED)

PRODUCT REVISED
in complying with the Florida Building Code
Acceptance No. 12-0614.03
Expiration Date OCT 23, 2013
By Shaw J. Chang
Miami Dade Product Control

NUMBER OF ANCHORS AT MTG. STILE ENDS (HEAD/SILL)			
MAXIMUM DOOR LEAF HEIGHT	ANCHORS TYPE 'A' THRU DOOR FRAME	ANCHORS TYPE 'B' THRU STRAP CLIP	ANCHORS TYPE 'B' THRU CONT. ANGLE
UPTO 120"	6	20	7
UPTO 96"	5	16	6

THESE DOORS ARE RATED FOR LARGE MISSILE IMPACT.
SHUTTERS ARE NOT REQUIRED.

AMERICAN OUTSWING WOOD PATIO DOOR

DESIGN LOAD RATINGS FOR SINGLE(X) AND DOUBLE(XX) DOORS TO BE AS PER CHARTS SHOWN IN SHEET 2.
THE SINGLE(X) AND DOUBLE(XX) MAY BE USED IN COMBINATION WITH/WITHOUT SIDELITE AND WITH/WITHOUT TRANSOM (UNDER SEPARATE APPROVALS) WITH HARTMAN CLIPPED/UNCLIPPED WOOD & STEEL MULLION (UNDER SEPARATE APPROVAL) OR MAY BE USED WITH MIAMI-DADE COUNTY APPROVED STAND ALONE CLIPPED MULLION IN BETWEEN.
WHEN DOORS ARE USED IN MULLED COMBINATION, THE LOWER DESIGN PRESSURE FROM DOORS, SIDELITES, TRANSOMS OR MULLION WILL APPLY TO THE ENTIRE SYSTEM, INCLUDING INSTALLATION, TO BE REVIEWED AND APPROVED BY AUTHORITY HAVING JURISDICTION (AHJ).

USE THRESHOLD (B) FOR INSTALLATIONS WHERE WATER INFILTRATION RESISTANCE IS REQUIRED.

THRESHOLD (B1) MAY BE USED FOR INSTALLATIONS WHERE WATER INFILTRATION RESISTANCE IS NOT REQUIRED.

THIS PRODUCT HAS BEEN DESIGNED AND TESTED TO COMPLY WITH THE REQUIREMENTS OF THE FLORIDA BUILDING CODE INCLUDING HIGH VELOCITY HURRICANE ZONE (HVHZ).

1BY OR 2BY WOOD BUCKS BY OTHERS, MUST BE ANCHORED PROPERLY TO TRANSFER LOADS TO THE STRUCTURE.

ANCHORS SHALL BE AS LISTED, SPACED AS SHOWN ON DETAILS, ANCHORS EMBEDMENT TO BASE MATERIAL SHALL BE BEYOND WALL DRESSING OR STUCCO.

ANCHORING OR LOADING CONDITIONS NOT SHOWN IN THESE DETAILS ARE NOT PART OF THIS APPROVAL.

A LOAD DURATION INCREASE IS USED IN DESIGN OF ANCHORS INTO WOOD ONLY.

MATERIALS INCLUDING BUT NOT LIMITED TO STEEL/METAL SCREWS, THAT COME INTO CONTACT WITH OTHER DISSIMILAR MATERIALS SHALL MEET THE REQUIREMENTS OF THE FLORIDA BLDG. CODE SECTION 2003.8.4.

LAMINATED GLASS
INSULATING LAMINATED GLASS

Engr: JAVAD AHMAD
CIVIL
FLA. PE # 70592
C.A.N. 3538

OCT 04 2012

AL-FAROOQ CORPORATION
ENGINEERS & PRODUCT DEVELOPMENT
1235 S.W. 87 AVE
MIAMI, FLORIDA 33174
TEL. (305) 264-8100 FAX. (305) 262-6978
COMP-ANL\W07-93HWD

AMERICAN OUTSWING WOOD PATIO DOOR (L.M.I.)

HARTMAN WINDOWS & DOORS, LLC
531 SOUTHERN BLVD.
WEST PALM BEACH, FL 33405
TEL. (561) 296-9600 FAX. (561) 296-9601

revisions:

no	date	by	description
A	08.28.08		REV. PER BCCO COMMENTS
B	05.16.12		UPDATED TO 2010 FBC
C	09.28.12		REV. PER RER COMMENTS

date: 11-05-07
scale: 1/2"=1'-0"
dr. by: HAMID
chk. by:

drawing no.
W07-93

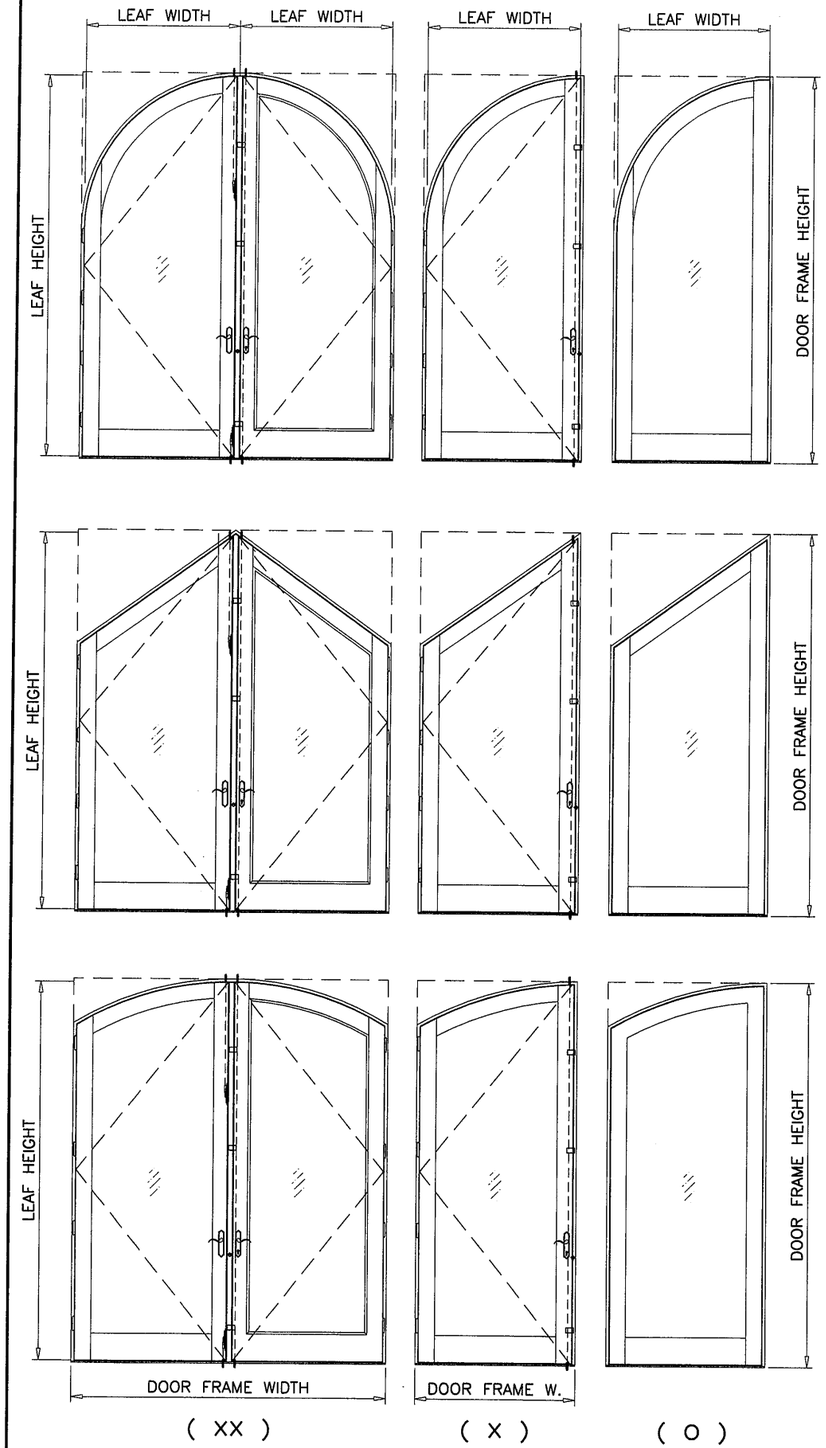

DESIGN LOAD CAPACITY - PSF ARCH TOP DOORS							
NOMINAL DIMS.		GLASS TYPES A, B & D		GLASS TYPE C		GLASS TYPE E	
LEAF WIDTH INCHES	LEAF HEIGHT INCHES	EXT.(+)	INT.(−)	EXT.(+)	INT.(−)	EXT.(+)	INT.(−)
36	84	70.0	70.0	70.0	70.0	70.0	70.0
	96	70.0	70.0	70.0	70.0	70.0	70.0
	108	70.0	70.0	70.0	70.0	70.0	70.0
	120	70.0	70.0	70.0	70.0	70.0	70.0

DOOR FRAME HEIGHT = LEAF HEIGHT + 1.813
DOOR FRAME WIDTH (SINGLE) = LEAF WIDTH + 2.125
DOOR FRAME WIDTH (DOUBLE) = (LEAF WIDTH)2 + 3.125

GLASS D.L.O. DIMS.

D.L.O. HEIGHT (DOORS & O PANELS) = LEAF HEIGHT − 13.5"
D.L.O. WIDTH (DOORS & O PANELS) = LEAF WIDTH − 10"

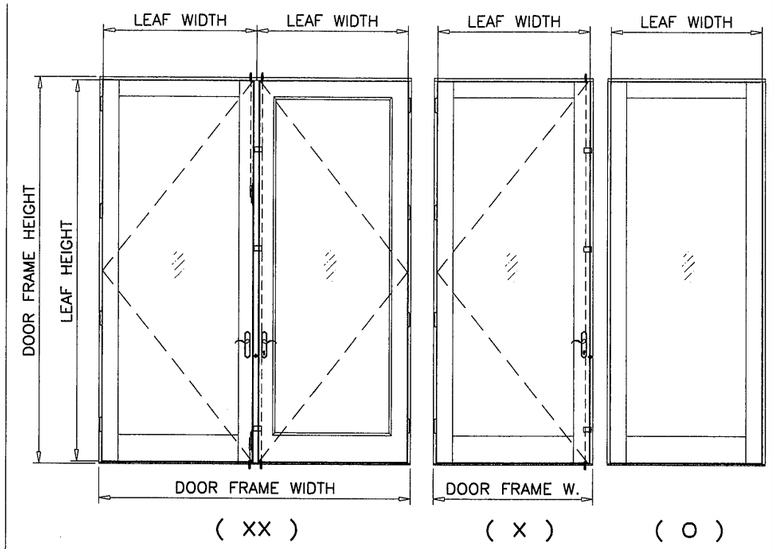

DESIGN LOAD CAPACITY - PSF RECTANGLE DOORS							
NOMINAL DIMS.		GLASS TYPES A, B & D		GLASS TYPE C		GLASS TYPE E	
LEAF WIDTH INCHES	LEAF HEIGHT INCHES	EXT.(+)	INT.(−)	EXT.(+)	INT.(−)	EXT.(+)	INT.(−)
36	84	70.0	70.0	70.0	70.0	70.0	70.0
	96	70.0	70.0	70.0	70.0	70.0	70.0
	108	70.0	70.0	70.0	70.0	70.0	70.0
	120	70.0	70.0	70.0	70.0	70.0	70.0
42	84	–	–	70.0	70.0	70.0	70.0
	96	–	–	70.0	70.0	70.0	70.0
	108	–	–	70.0	70.0	70.0	70.0
	120	–	–	70.0	70.0	70.0	70.0
48	84	–	–	70.0	70.0	70.0	70.0
	96	–	–	69.4	69.4	70.0	70.0
	108	–	–	64.3	64.3	70.0	70.0
	120	–	–	61.2	61.2	70.0	70.0

DOORS CAN BE INSTALLED WITH ANY OF THE FOLLOWING OPTIONS

OPTION 1: BY USING FASTENERS THRU DOOR FRAME.
OPTION 2: BY USING FASTENERS THRU STRAP CLIPS.
OPTION 3: BY USING FASTENERS THRU CONT. ALUM ANGLE.

SEE ELEVATIONS FOR SPACING
SEE SHEETS 4 THRU 7 FOR DETAILS.

FOR DESCRIPTION AND LOCATION OF LOCKS AND HINGES SEE SHEET 3.

NOTE:
GLASS CAPACITIES ARE BASED ON ASTM E1300-04 (3 SEC. GUSTS) AND FLORIDA BUILDING COMMISSION DECLARATORY STATEMENT DCA05-DEC-219

ALLOWABLE LOADS FOR ALTERNATE SHAPES AS SHOWN ABOVE OR SIMILAR CAN BE VERIFIED BY INSCRIBING DOOR SHAPE WITHIN RECTANGLE AS SHOWN IN DOTTED LINES AND OBTAINING ALLOWABLE LOADS FROM THOSE SHAPES.

PRODUCT REVIEWED
in compliance with the Florida Building Code
Acceptance No. 12-0614.03
Expiration Date 10/23/13
By Ishaq I. Chanda
Miami Dade Product Control

Engr: JAVAD AHMAD
CIVIL
FLA. PE # 70592
C.A.N. 3538
OCT 04 2012

AL-FAROOQ CORPORATION
ENGINEERS & PRODUCT DEVELOPMENT
1235 S.W. 87 AVE
MIAMI, FLORIDA 33174
TEL. (305) 264-8100 FAX. (305) 262-6978
COMP-ANL\W07-93HWD

AMERICAN OUTSWING WOOD PATIO DOOR (L.M.I.)

HARTMAN WINDOWS & DOORS, LLC
531 SOUTHERN BLVD.
WEST PALM BEACH, FL 33405
TEL. (561) 296-9600 FAX. (561) 296-9601

revisions:

no	date	by	description
A	08.28.08		REV. PER BCCO COMMENTS
B	05.16.12		UPDATED TO 2010 FBC
C	09.28.12		REV. PER RER COMMENTS

date: 11-05-07
scale: 1/2"=1'-0"
dr. by: HAMID
chk. by:

drawing no.
W07-93

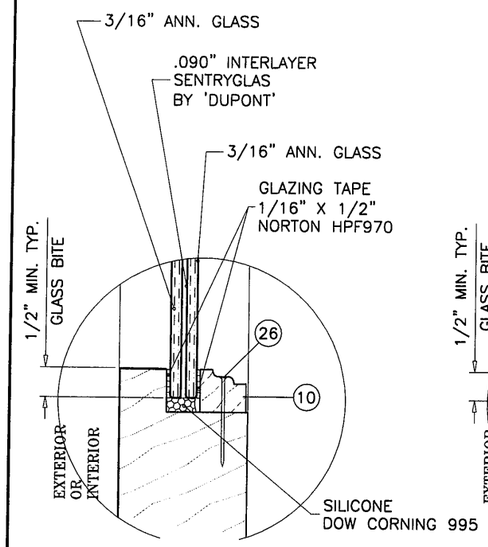

GLAZING TYPE 'A'

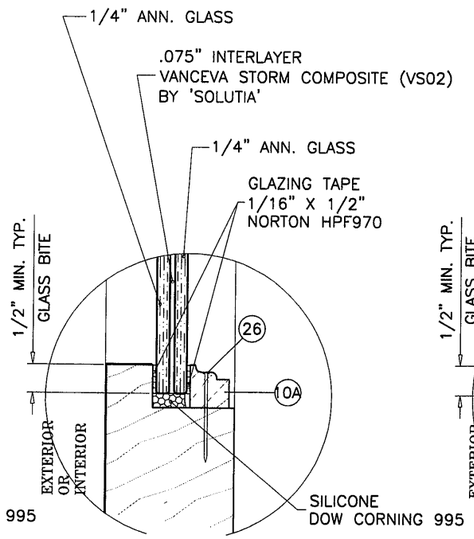

GLAZING TYPE 'B'

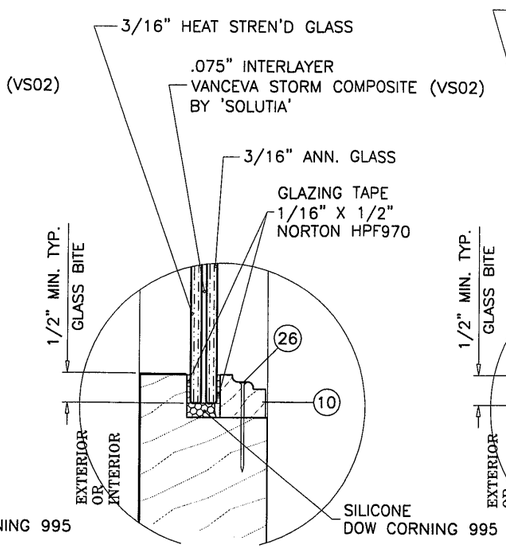

GLAZING TYPE 'C'

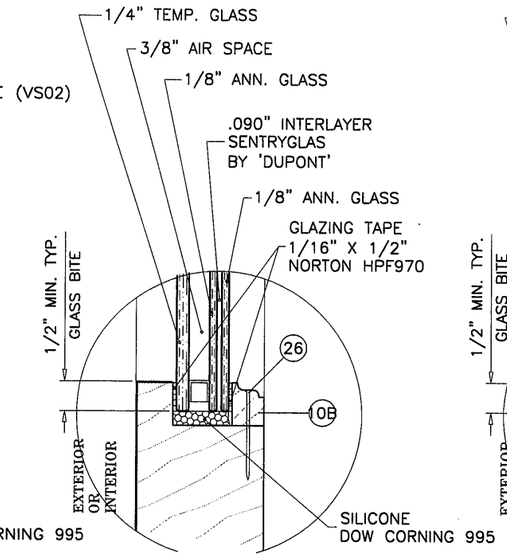

GLAZING TYPE 'D'

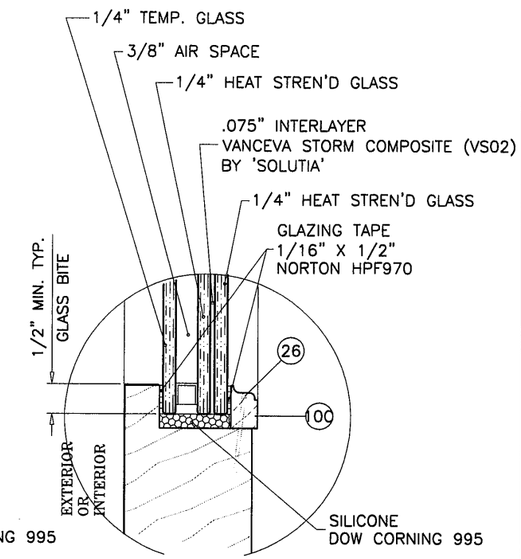

GLAZING TYPE 'E'

SEALANT:

ALL JOINTS SEALED WITH SONNEBORN NP 1 POLYURETHANE SEALANT.

HINGES:

4-1/2" X 4-1/2" ST. STEEL BUTT HINGES
AT 8-1/4" FROM TOP, 12-1/4" FROM BOTTOM
AND 30-1/8" O.C. MAX.

LOCKS:

SINGLE LEAF DOORS

6 POINT LOCKING SYSTEM BY 'SCHLEGEL' WITH KEEPERS ON FRAME
AND SHOOT BOLTS ENGAGING SIMULTANEOUSLY AT HEAD & SILL
ACTUATING HANDLE AT 37" FROM BOTTOM.
DEAD BOLT LOCK AT 33-1/2" FROM BOTTOM.
3-3/4" LONG KEEPERS AT 10-1/2", 67-1/2" AND 98-1/2"
FROM BOTTOM, FASTENED W/ (2) #8 X 1-1/4" FH SMS
8" LONG KEEPER AT 38" FROM BOTTOM
FASTENED W/ (3) #8 X 1-1/4" FH SMS

DOUBLE LEAF DOORS

ACTIVE LEAF:

6 POINT LOCKING SYSTEM BY 'SCHLEGEL' WITH KEEPERS ON IN-ACTIVE LOCK STILE
AND SHOOT BOLTS ENGAGING SIMULTANEOUSLY AT HEAD & SILL
ACTUATING HANDLE AT 37" FROM BOTTOM.
DEAD BOLT LOCK AT 33-1/2" FROM BOTTOM.
3-3/4" LONG KEEPERS AT 10-1/2", 67-1/2" AND 98-1/2"
FROM BOTTOM, FASTENED W/ (2) #8 X 1-1/4" FH SMS
8" LONG KEEPER AT 38" FROM BOTTOM
FASTENED W/ (3) #8 X 1-1/4" FH SMS

IN-ACTIVE LEAF:

CONCEALED FLUSH BOLTS BY 'HARTMAN'
MANUALLY OPERATED LEVERS MOUNTED ON INSIDE FACE
OF LEAF STILE.

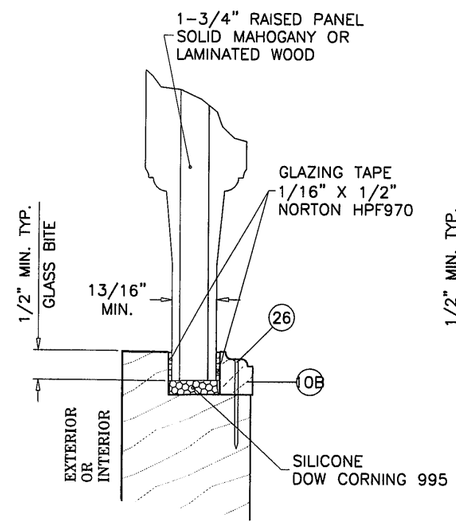

GLAZING TYPE 'F'

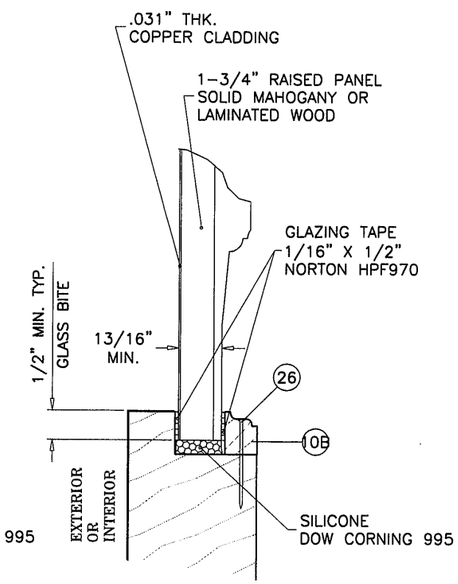

GLAZING TYPE 'G'

GLAZING OPTIONS
PARTIAL RAISED PANEL

PRODUCT REVISED
in complying with the Florida
Building Code
Acceptance No. 12-0614.03
Expiration Date 10/23/13
By Shaq L. Lynch
Miami-Dade Product Control

Engr: JAVAD AHMAD
CIVIL
FLA. PE # 70592
C.A.N. 3538

OCT 04 2012

AL-FAROOQ CORPORATION
ENGINEERS & PRODUCT DEVELOPMENT
1235 S.W. 87 AVE
MIAMI, FLORIDA 33174
TEL. (305) 264-8100 FAX. (305) 262-6978
COMP-ANL\W07-93HWD

AMERICAN OUTSWING WOOD PATIO DOOR (L.M.I.)

HARTMAN WINDOWS & DOORS, LLC
531 SOUTHERN BLVD.
WEST PALM BEACH, FL 33405
TEL. (561) 296-9600 FAX. (561) 296-9601

revisions:

no	date	by	description
A	08.28.08		REV. PER BCCO COMMENTS
B	05.16.12		UPDATED TO 2010 FBC
C	09.28.12		REV. PER RER COMMENTS

date: 11-05-07
scale: 3/8" = 1"
dr. by: HAMID
chk. by:

drawing no.
W07-93

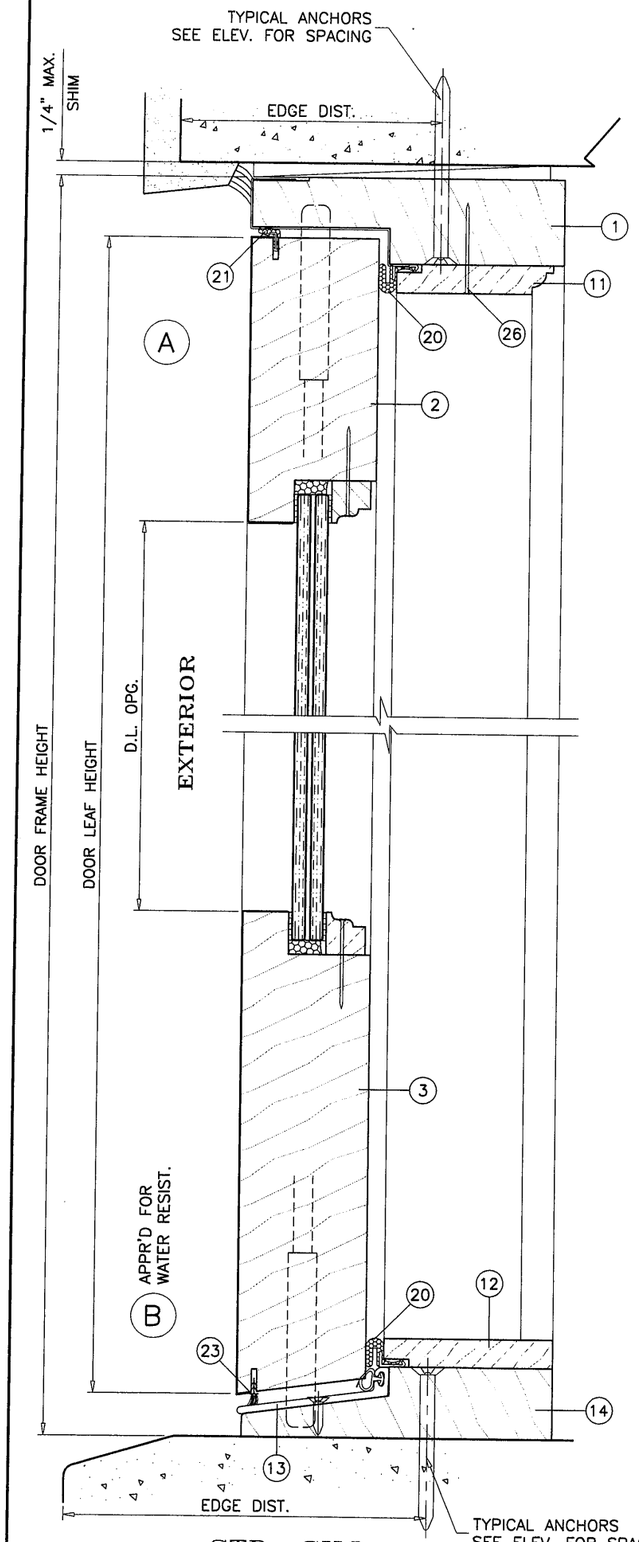

STD. SILL

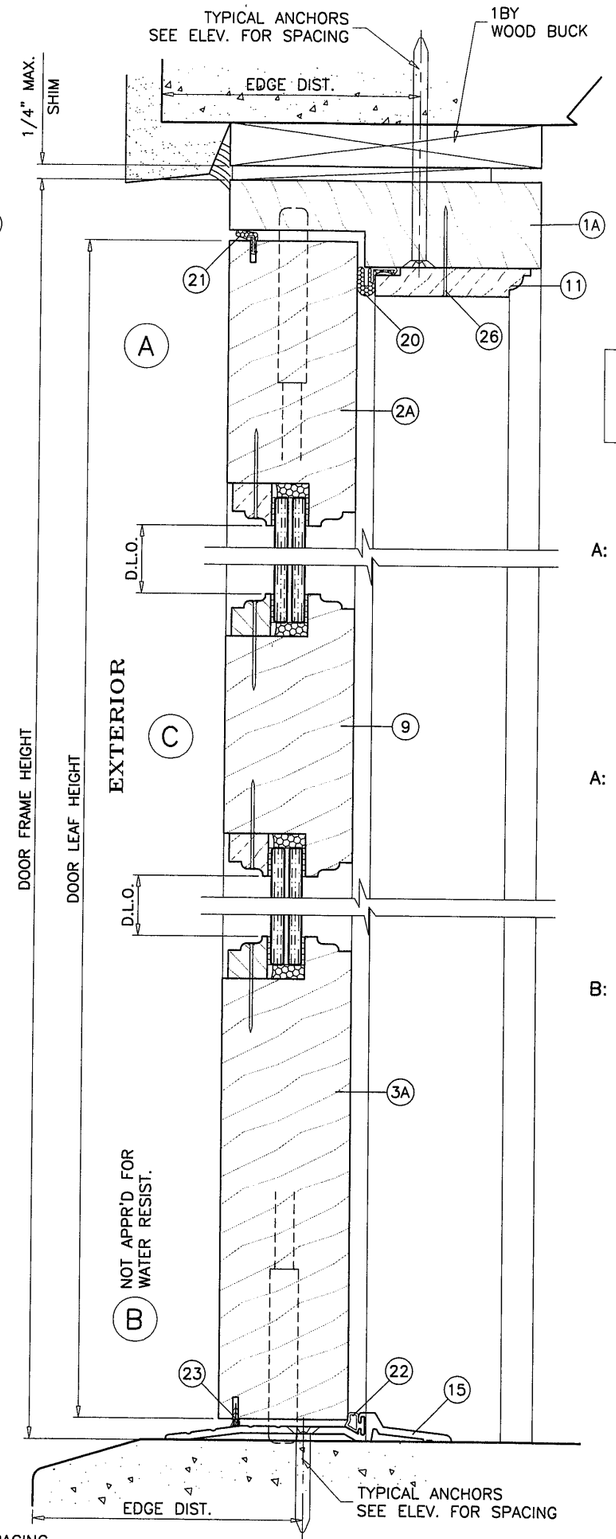

ADA. SILL

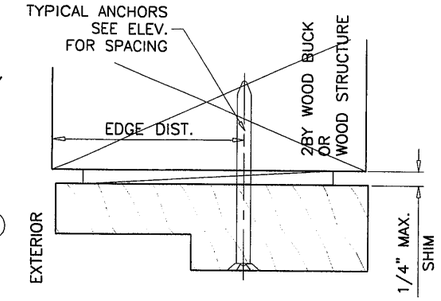

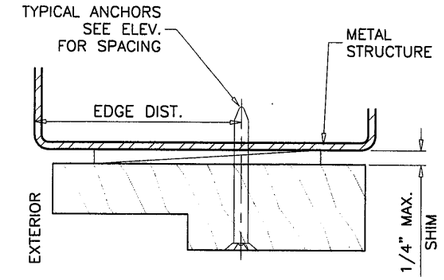

WOOD BUCKS NOT BY HARTMAN WINDOWS, MUST SUSTAIN LOADS IMPOSED BY GLAZING SYSTEM AND TRANSFER THEM TO THE BUILDING STRUCTURE.

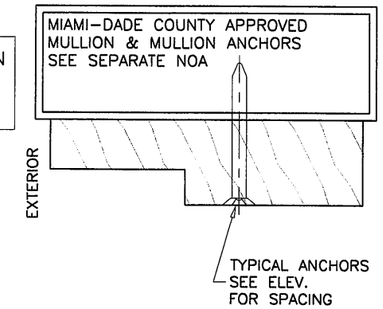

TYPICAL ANCHORS: SEE ELEV. FOR SPACING

ANCHORS THRU DOOR FRAME

A: 1/4" DIA. ULTRACON BY 'ELCO' (Fu=177 KSI, Fy=155 KSI)
INTO 2BY WOOD BUCKS OR WOOD STRUCTURES
1-1/2" MIN. PENETRATION INTO WOOD

THRU 1BY BUCKS INTO CONC. OR MASONRY
1-1/4" MIN. EMBED INTO CONC. OR MASONRY

DIRECTLY INTO CONC. OR MASONRY
1-1/4" MIN. EMBED INTO CONC. OR MASONRY

A: #14 SMS OR SELF DRILLING SCREWS (GRADE 2 CRS)
INTO MIAMI-DADE COUNTY APPROVED MULLIONS (MIN. THK. = 1/8")
INTO METAL STRUCTURES
STEEL : 1/8" THK. MIN. (Fy = 36 KSI MIN.)
ALUMINUM : 1/8" THK. MIN. (6063-T5 MIN.)
(STEEL IN CONTACT WITH ALUMINUM TO BE PLATED OR PAINTED)

ANCHORS THRU STRAP CLIPS & ALUM ANGLE (SEE SHEET 7 FOR DETAILS)

B: #10 SMS OR SELF DRILLING SCREWS (GRADE 2 CRS)
INTO 2BY WOOD BUCKS OR WOOD STRUCTURE
1-3/4" MIN. PENETRATION INTO WOOD

ANCHOR EDGE DISTANCES

INTO CONCRETE AND MASONRY = 2" MIN. (UNLESS SPECIFIED)
INTO WOOD STRUCTURE = 1" MIN. (UNLESS SPECIFIED)
INTO METAL STRUCTURE = 1" MIN.

ANCHORS CL TO CL DISTANCE

INTO CONCRETE AND MASONRY = 3" MIN.
INTO WOOD STRUCTURE = 1" MIN.

CONCRETE AT HEAD, SILL OR JAMBS f'c = 3000 PSI MIN.
C-90 HOLLOW/FILLED BLOCK AT JAMBS f'm = 2000 PSI MIN.

PRODUCT REVISED
in complying with the Florida Building Code
Acceptance No 12-0614.03
Expiration Date 10/23/13
By Miami Dade Product Control

Engr: JAVAD AHMAD
CIVIL
FLA. PE # 70592
C.A.N. 3538

OCT 04 2012

AL-FAROOQ CORPORATION
ENGINEERS & PRODUCT DEVELOPMENT
1235 S.W. 87 AVE
MIAMI, FLORIDA 33174
TEL. (305) 264-8100 FAX. (305) 262-6978
COMP-ANL\W07-93HWD

AMERICAN OUTSWING WOOD PATIO DOOR (L.M.I.)

HARTMAN WINDOWS & DOORS, LLC
531 SOUTHERN BLVD.
WEST PALM BEACH, FL 33405
TEL. (561) 296-9600 FAX. (561) 296-9601

revisions:

no	date	by	description
A	08.28.08		REV. PER BCCO COMMENTS
B	05.16.12		UPDATED TO 2010 FBC
C	09.28.12		REV. PER RER COMMENTS

date: 11-05-07
scale: 3/8" = 1"
dr. by: HAMID
chk. by:

drawing no.
W07-93

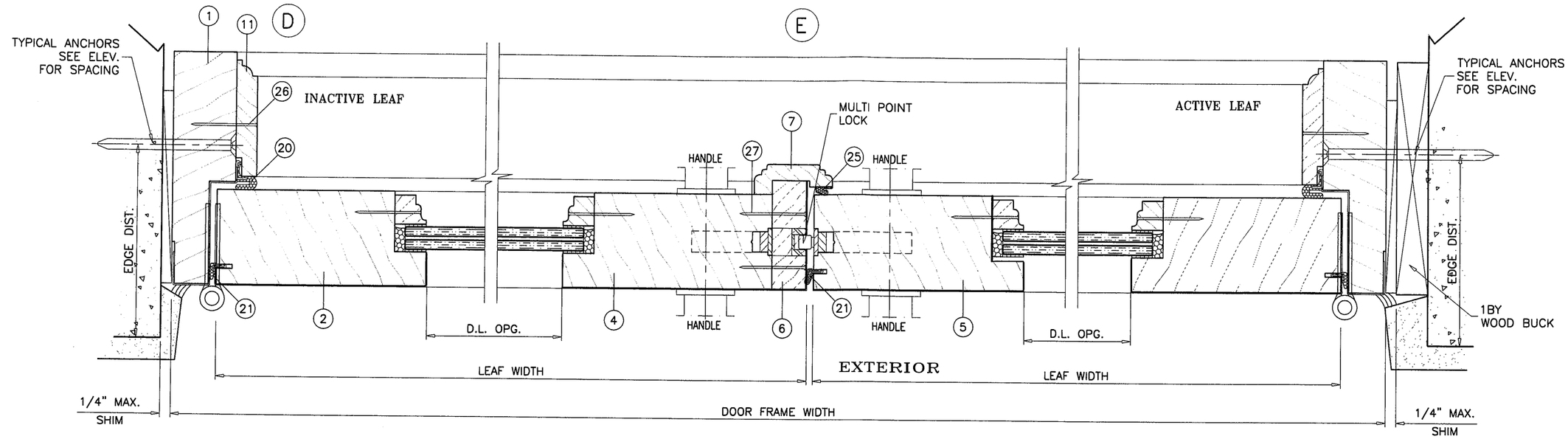

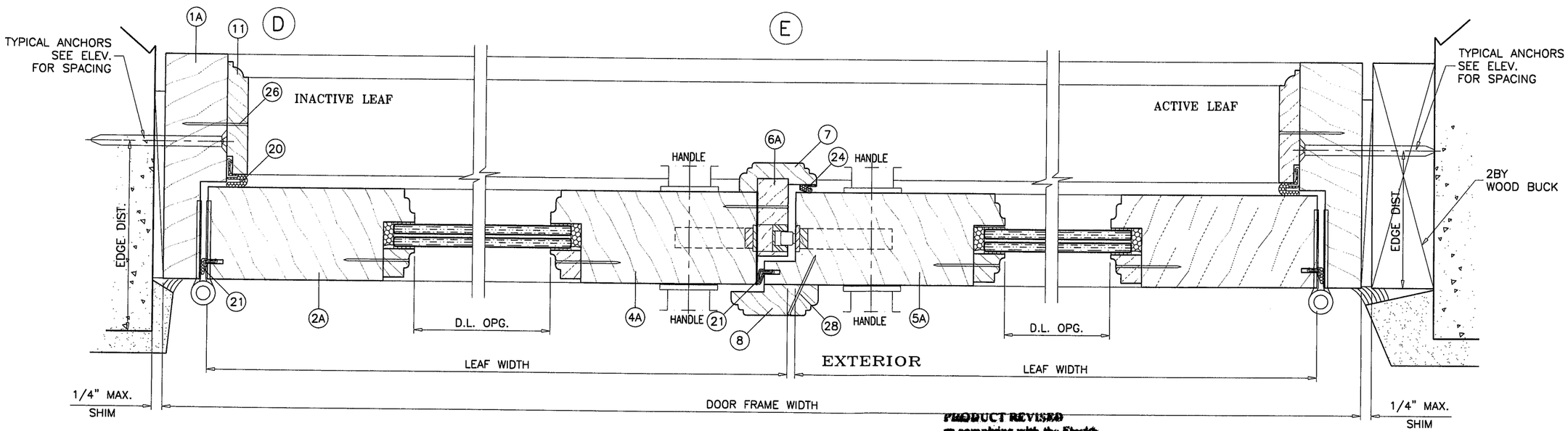

PRODUCT REVISED
as complying with the Florida
Building Code
Acceptance No 12-0614.03
Expiration Date 10/23/13
By Ishar L. Chaudhary
Miami Dade Product Control

FOR DOOR FRAME INSTALLATION WITH STRAP CLIPS OR CONT. ALUM ANGLE SEE SHEET 7 FOR DETAILS.

Engr: JAVAD AHMAD
CIVIL
FLA. PE # 70592
C.A.N. 3538

OCT 04 2012

AL-FAROOQ CORPORATION
ENGINEERS & PRODUCT DEVELOPMENT
1235 S.W. 87 AVE
MIAMI, FLORIDA 33174
TEL. (305) 264-8100 FAX. (305) 262-6978
COMP-ANL\W07-93HWD

AMERICAN OUTSWING WOOD PATIO DOOR (L.M.I.)

HARTMAN WINDOWS & DOORS, LLC
531 SOUTHERN BLVD.
WEST PALM BEACH, FL 33405
TEL. (561) 296-9600 FAX. (561) 296-9601

revisions:

no	date	by	description
A	08.28.08		REV. PER BCCO COMMENTS
B	05.16.12		NO CHANGE THIS SHEET
C	09.28.12		REV. PER RER COMMENTS

date: 11-05-07
scale: 3/8" = 1"
dr. by: HAMID
chk. by:

drawing no.
W07-93

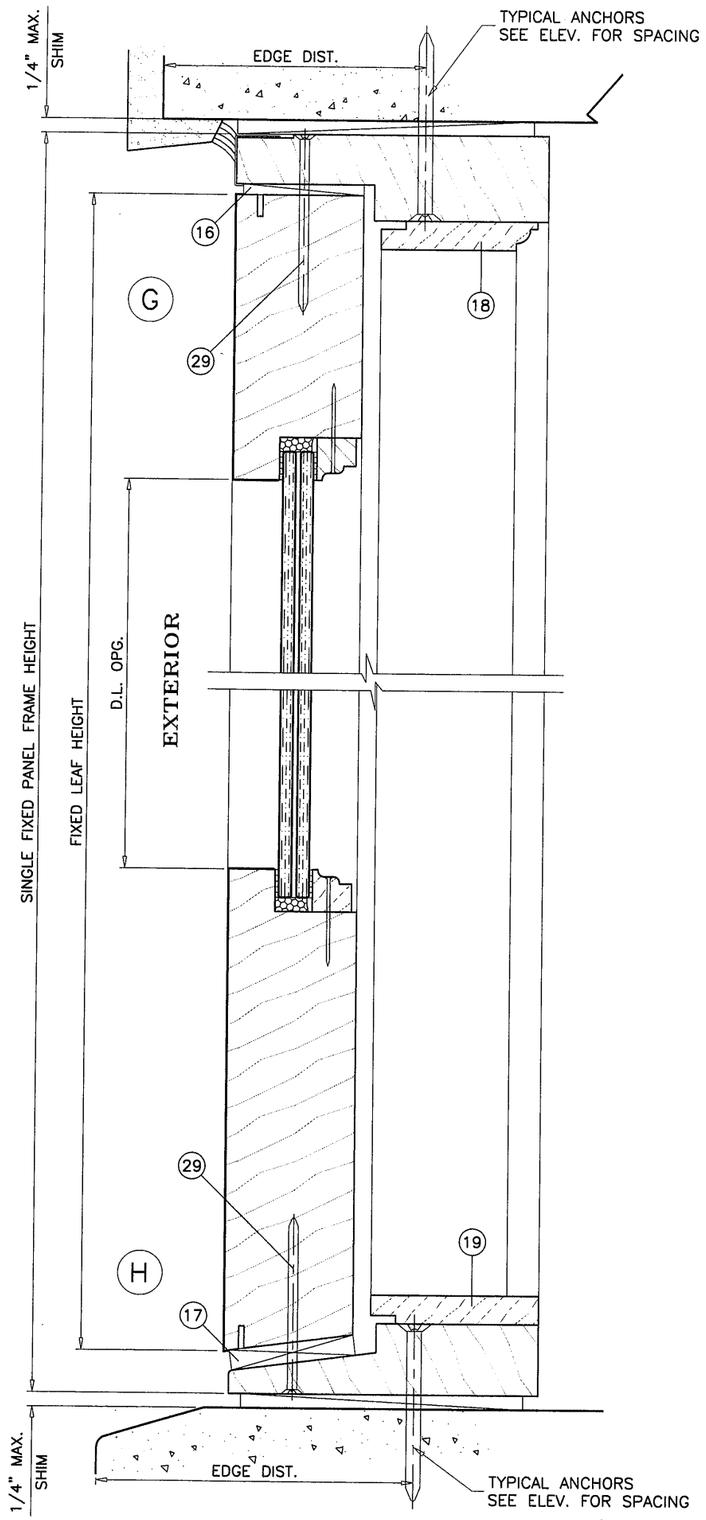

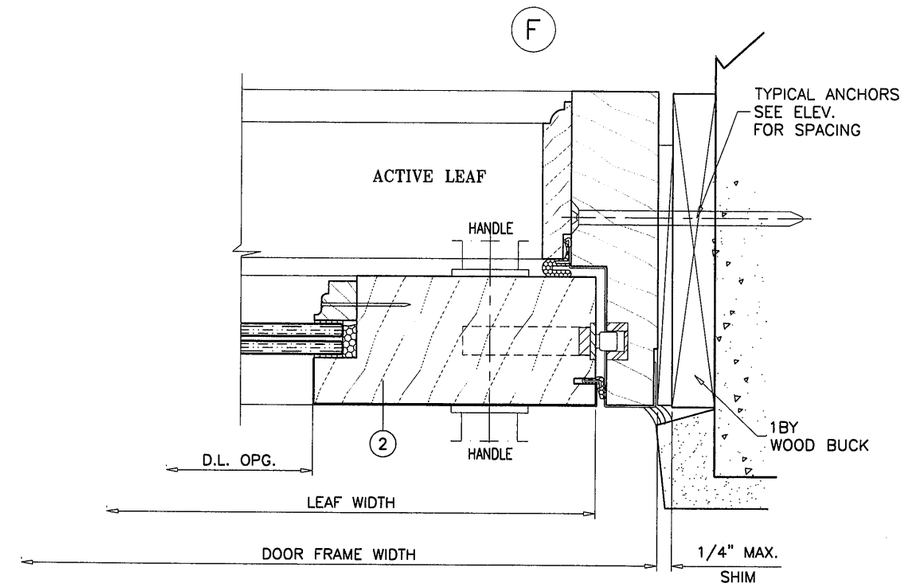

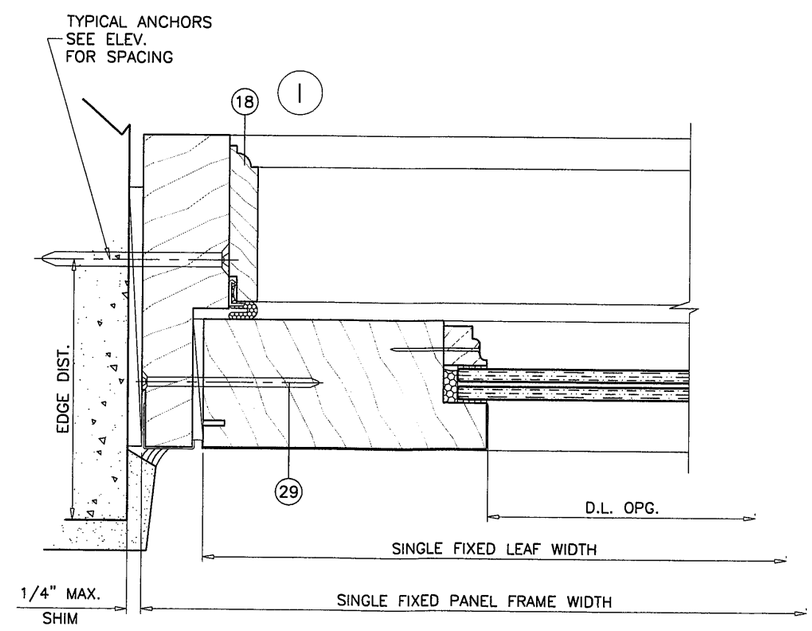

PRODUCT REVISED
in complying with the Florida
Building Code
Acceptance No. 12-0614.03
Expiration Date 10/23/13
Product Control

Engr: JAVAD AHMAD
CIVIL
FLA. PE # 70592
C.A.N. 3538

OCT 04 2012

AL-FAROOQ CORPORATION
ENGINEERS & PRODUCT DEVELOPMENT
1235 S.W. 87 AVE
MIAMI, FLORIDA 33174
TEL. (305) 264-8100 FAX. (305) 262-6978
COMP-ANL\W07-93HWD

AMERICAN OUTSWING WOOD PATIO DOOR (L.M.I.)

HARTMAN WINDOWS & DOORS, LLC
531 SOUTHERN BLVD.
WEST PALM BEACH, FL 33405
TEL. (561) 296-9600 FAX. (561) 296-9601

revisions:

no	date	by	description
A	08.28.08		REV. PER BCCO COMMENTS
B	05.16.12		NO CHANGE THIS SHEET
C	09.28.12		REV. PER RER COMMENTS

date: 11-05-07
scale: 3/8" = 1"
dr. by: HAMID
chk. by:

drawing no.
W07-93

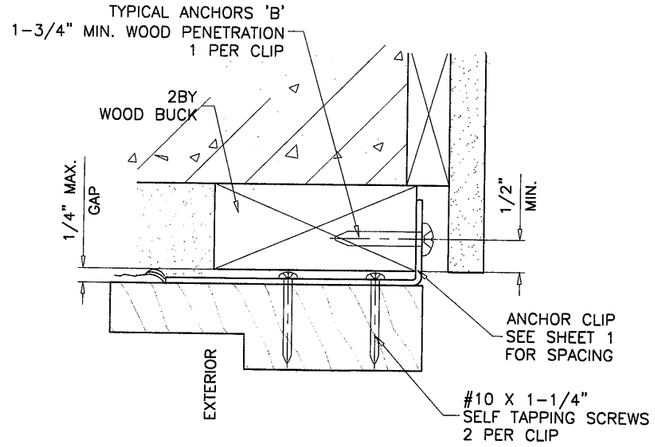

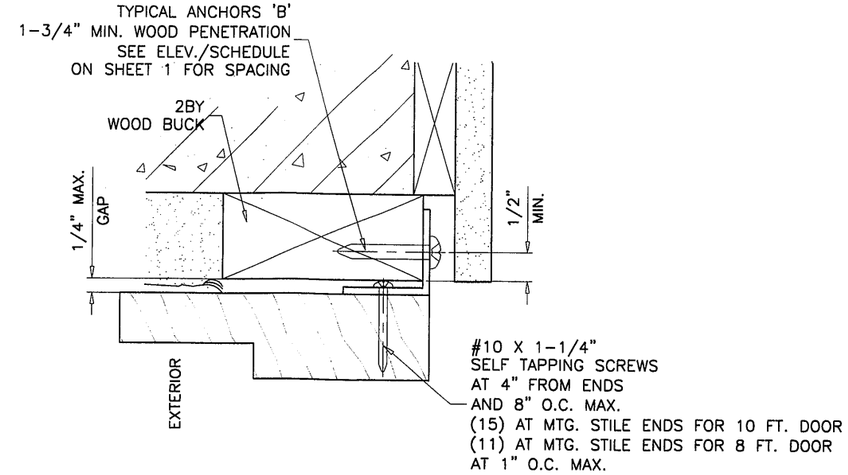

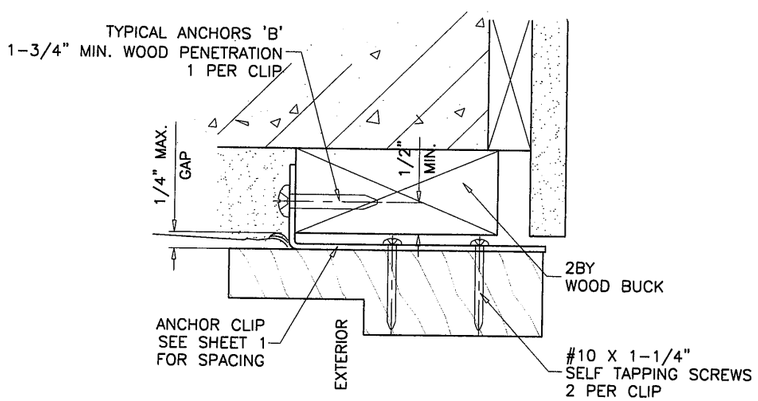

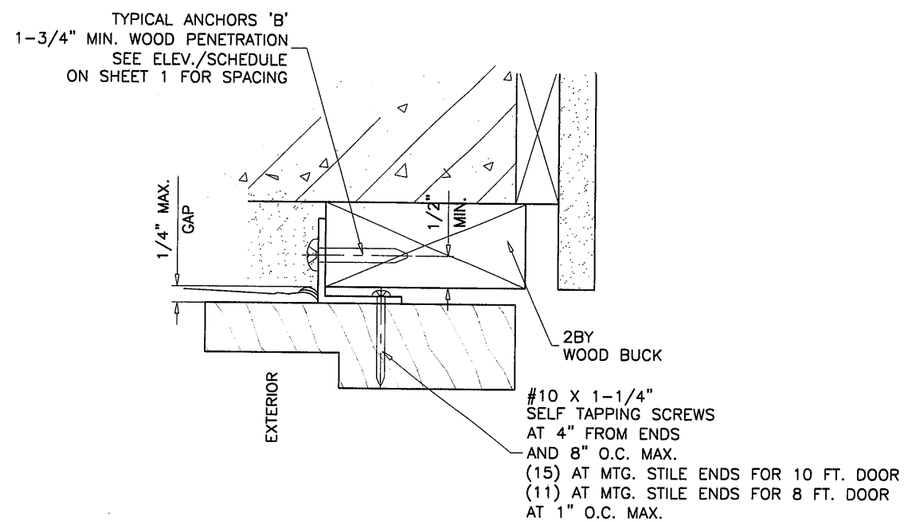

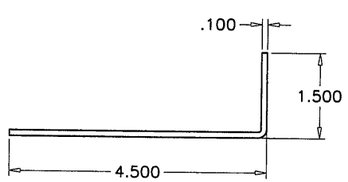

STRAP CLIP, 1-3/8" LONG
GALV. STEEL (Fy = 33000 PSI)

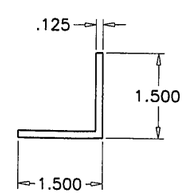

ALUMINUM ANGLE CONT.
(6063-T6)

APPLICATIONS IN WOOD SUBSTRATE OR WOOD STRUCTURE ONLY

PRODUCT REVISED
as complying with the Florida
Building Code
Acceptance No. 12-0614.03
Expiration Date 10/23/13
By [signature]
Miami Dade Product Control

Engr: JAVAD AHMAD
CIVIL
FLA. PE # 70592
C.A.N. 3538

OCT 04 2012

AL-FAROOQ CORPORATION
ENGINEERS & PRODUCT DEVELOPMENT
1235 S.W. 87 AVE
MIAMI, FLORIDA 33174
TEL. (305) 264-8100 FAX. (305) 262-6978

COMP-ANL\W07-93HWD

AMERICAN OUTSWING WOOD PATIO DOOR (L.M.I.)

HARTMAN WINDOWS & DOORS, LLC
531 SOUTHERN BLVD.
WEST PALM BEACH, FL 33405
TEL. (561) 296-9600 FAX. (561) 296-9601

revisions:

no	date	by	description
A	08.28.08		REV. PER BCCO COMMENTS
B	05.16.12		UPDATED TO 2010 FBC
C	09.28.12		REV. PER RER COMMENTS

date: 11-05-07
scale: 3/8" = 1"
dr. by: HAMID
chk. by:

drawing no.
W07-93

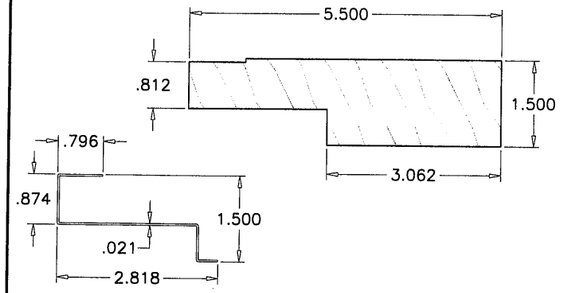

OPTIONAL CLADDING (COPPER)

1 FRAME HEAD/JAMB

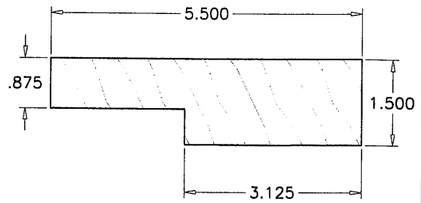

1A FRAME HEAD/JAMB

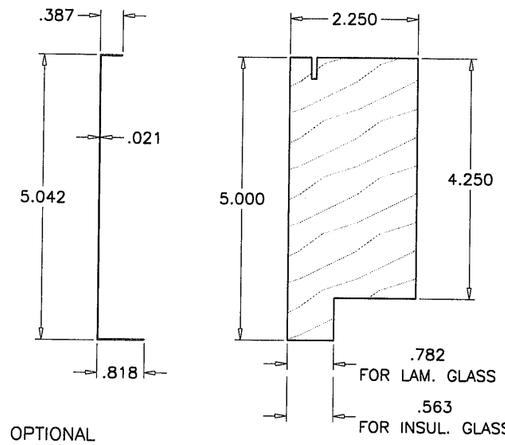

OPTIONAL CLADDING (COPPER)

2 TOP RAIL/HINGE STILE/LOCK STILE

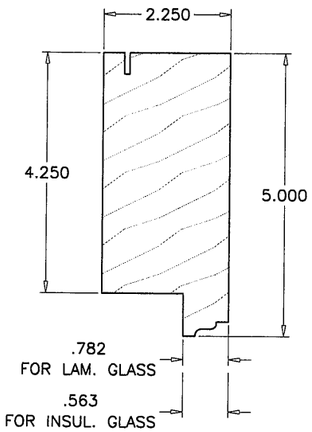

2A TOP RAIL/HINGE STILE/LOCK STILE

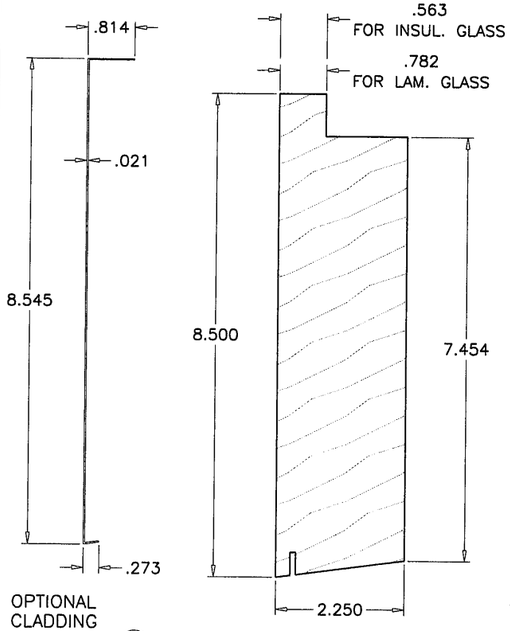

OPTIONAL CLADDING (COPPER)

3 BOTTOM RAIL

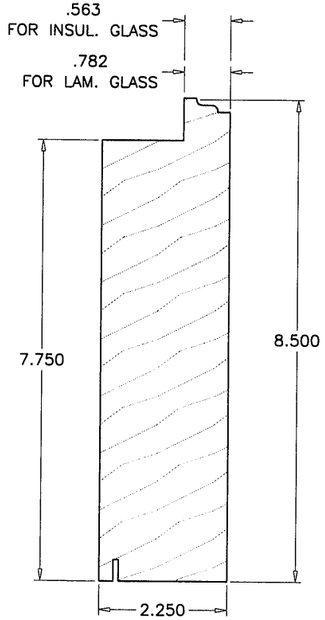

3A BOTTOM RAIL

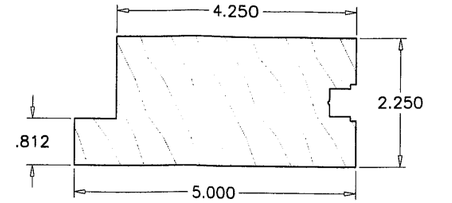

4 INACTIVE LEAF MTG. STILE

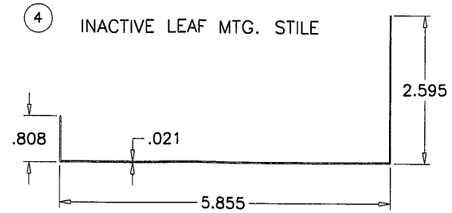

OPTIONAL CLADDING (COPPER)

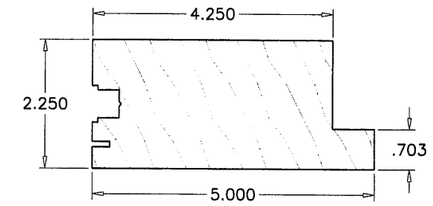

5 ACTIVE LEAF MTG. STILE

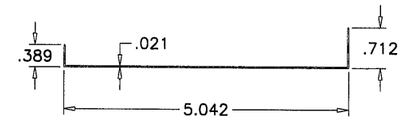

OPTIONAL CLADDING (COPPER)

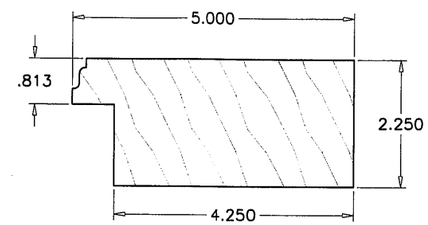

4A INACTIVE LEAF MTG. STILE

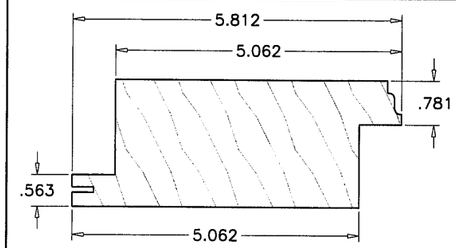

5A ACTIVE LEAF MTG. STILE

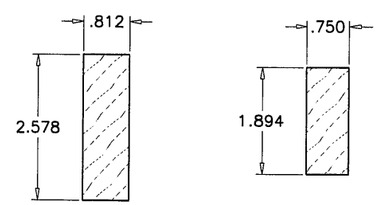

6 ASTRAGAL W/O EXT. COVER

6A ASTRAGAL WITH EXT. COVER

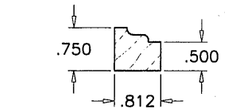

10 GLASS STOP 7/16" GLASS

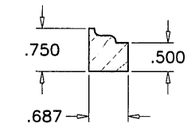

10A GLASS STOP 9/16" GLASS

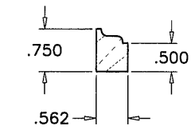

10B GLASS STOP INSUL. GLASS WOOD PANEL

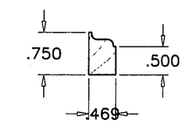

10C GLASS STOP INSUL. GLASS WOOD PANEL

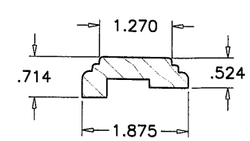

7 ASTRAGAL COVER INTERIOR

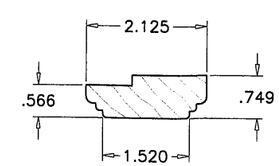

8 ASTRAGAL COVER EXTERIOR

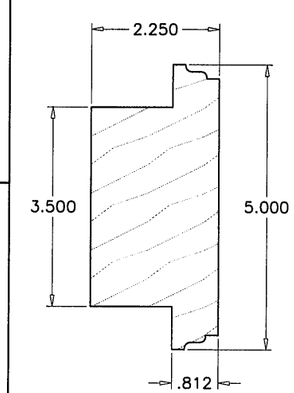

9 MID RAIL/STILE

PRODUCT REVIEWED
as complying with the Florida Building Code
Acceptance No. 12-0614.03
Expiration Date 10/23/13
By Lisa L. Chang
Product Control

Engr: JAVAD AHMAD
CIVIL
FLA. PE # 70592
C.A.N. 3538

OCT 04 2012

AL-FAROOQ CORPORATION
ENGINEERS & PRODUCT DEVELOPMENT
1235 S.W. 87 AVE
MIAMI, FLORIDA 33174
TEL. (305) 264-8100 FAX. (305) 262-6978
COMP-ANL\W07-93HWD

AMERICAN OUTSWING WOOD PATIO DOOR (L.M.I.)

HARTMAN WINDOWS & DOORS, LLC
531 SOUTHERN BLVD.
WEST PALM BEACH, FL 33405
TEL. (561) 296-9600 FAX. (561) 296-9601

revisions:

no	date	by	description
A	08.28.08		REV. PER BCCO COMMENTS
B	05.16.12		NO CHANGE THIS SHEET
C	09.28.12		NO CHANGE THIS SHEET

date: 11-05-07
scale: 3/8" = 1"
dr. by: HAMID
chk. by:

drawing no. W07-93

sheet 8 of 10

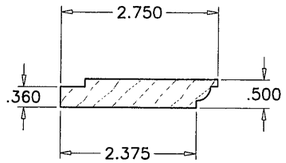

(11) DOOR STOP HEAD/JAMB

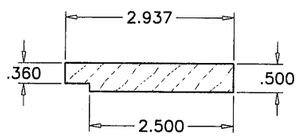

(12) DOOR STOP SILL

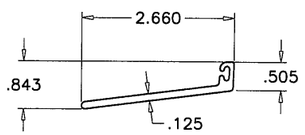

(13) THRESOLD

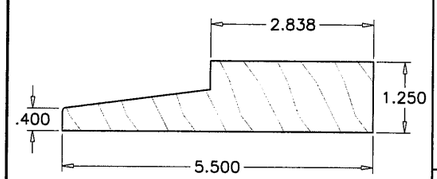

(14) FRAME SILL

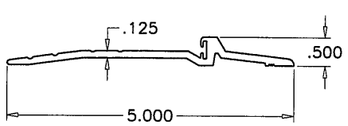

(15) THRESHOLD (ADA DOOR)

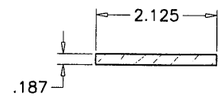

(16) FIX. LEAF FILLER (HEAD)

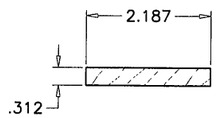

(17) FIX. LEAF FILLER (SILL)

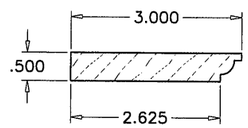

(18) FIX. LEAF STOP (HEAD/JAMB)

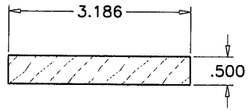

(19) FIX. LEAF STOP (SILL)

ITEM #	PART #	REQD.	DESCRIPTION	MATERIAL	MANF./SUPPLIER/REMARKS
1	–	3/ DOOR	FRAME HEAD/JAMB W/ CLADDING	WOOD	MAHOGANY
1A	–	3/ DOOR	FRAME HEAD/JAMB W/O CLADDING	WOOD	MAHOGANY
2	–	2/ LEAF	TOP RAIL/HINGE STILE/LOCK STILE W/ CLADDING	WOOD	MAHOGANY
2A	–	2/ LEAF	TOP RAIL/HINGE STILE/LOCK STILE W/O CLADDING	WOOD	MAHOGANY
3	–	1/ LEAF	BOTTOM RAIL W/ CLADDING	WOOD	MAHOGANY
3A	–	1/ LEAF	BOTTOM RAIL W/O CLADDING	WOOD	MAHOGANY
4	–	1/ LEAF	INACTIVE LEAF MTG. STILE W/ CLADDING	WOOD	MAHOGANY
4A	–	1/ LEAF	INACTIVE LEAF MTG. STILE W/O CLADDING	WOOD	MAHOGANY
5	–	1/ LEAF	ACTIVE LEAF MTG. STILE W/ CLADDING	WOOD	MAHOGANY
5A	–	1/ LEAF	ACTIVE LEAF MTG. STILE W/O CLADDING	WOOD	MAHOGANY
6	–	1/ LEAF	ASTRAGAL WITHOUT EXT. COVER	WOOD	MAHOGANY
6A	–	1/ LEAF	ASTRAGAL WITH EXT. COVER	WOOD	MAHOGANY
7	–	1	ASTRAGAL COVER INTERIOR	WOOD	MAHOGANY
8	–	AS REQD.	ASTRAGAL COVER EXTERIOR	WOOD	MAHOGANY
9	–	AS REQD.	MID RAIL/STILE	WOOD	MAHOGANY
10	–	AS REQD.	GLASS STOP (7/16" GLASS)	WOOD	MAHOGANY
10A	–	AS REQD.	GLASS STOP (9/16" GLASS)	WOOD	MAHOGANY
10B	–	AS REQD.	GLASS STOP (INSUL. GLASS/WOOD PANEL)	WOOD	MAHOGANY
10C	–	AS REQD.	GLASS STOP (INSUL. GLASS/WOOD PANEL)	WOOD	MAHOGANY
11	–	3/ DOOR	DOOR STOP (HEAD/JAMB)	WOOD	MAHOGANY
12	–	1/ DOOR	DOOR STOP (SILL)	WOOD	MAHOGANY
13	–	1/ DOOR	THRESHOLD	BRONZE	–
14	–	1/ DOOR	FRAME SILL	WOOD	MAHOGANY
15	–	1/ DOOR	THRESHOLD (ADA DOOR)	BRONZE	–
16	–	AS REQD.	FIX. LEAF FILLER (HEAD)	WOOD	MAHOGANY
17	–	AS REQD.	FIX. LEAF FILLER (SILL)	WOOD	MAHOGANY
18	–	AS REQD.	FIX. LEAF STOP (HEAD/JAMB)	WOOD	MAHOGANY
19	–	AS REQD.	FIX. LEAF STOP (SILL)	WOOD	MAHOGANY
20	QDS-650	AS REQD.	Q-LON WEATHERSEAL GASKET	–	SCHLEGEL
21	QDS-320	AS REQD.	Q-LON WEATHERSEAL GASKET	–	SCHLEGEL
22	LRB-097	AS REQD.	THRESHOLD W'STRIPPING	VINYL	–
23	KP-51	AS REQD.	KERF PILE WEATHERSEAL	–	–
24	QDS-375	AS REQD.	Q-LON WEATHERSEAL GASKET	–	SCHLEGEL
25	QDS-500	AS REQD.	Q-LON WEATHERSEAL GASKET	–	SCHLEGEL
26	–	AS REQD.	18 GA. X 1-1/2" BRAD NAILS	–	2" FROM ENDS & 12" O.C.
27	–	AS REQD.	18 GA. X 1-1/2" BRAD NAILS IN DOUBLE ROW	–	3" FROM ENDS & 8" O.C.
28	–	AS REQD.	18 GA. X 1-1/2" BRAD NAILS	–	3" FROM ENDS & 8" O.C.
29	#10 X 3"	AS REQD.	FH WOOD SCREWS	–	3" FROM ENDS & 8" O.C.

SEE SHEET 3 FOR LOCK AND FLUSH BOLT DESCRIPTION

PRODUCT REVISED
as complying with the Florida
Building Code
Acceptance No. 12-0614.03
Expiration Date 10/23/13
By: Istar L. Chavez

Engr: JAVAD AHMAD
CIVIL
FLA. PE # 70592
C.A.N. 3538

OCT 04 2012

AL-FAROOQ CORPORATION
ENGINEERS & PRODUCT DEVELOPMENT
1235 S.W. 87 AVE
MIAMI, FLORIDA 33174
TEL. (305) 264-8100 FAX. (305) 262-6978

COMP-ANL\W07-93HWD

AMERICAN OUTSWING WOOD PATIO DOOR (L.M.I.)

HARTMAN WINDOWS & DOORS, LLC
531 SOUTHERN BLVD.
WEST PALM BEACH, FL 33405
TEL. (561) 296-9600 FAX. (561) 296-9601

revisions:

no	date	by	description
A	08.28.08		REV. PER BCCO COMMENTS
B	05.16.12		NO CHANGE THIS SHEET
C	09.28.12		NO CHANGE THIS SHEET

date: 11-05-07
scale: 3/8" = 1"
dr. by: HAMID
chk. by:

drawing no.
W07-93

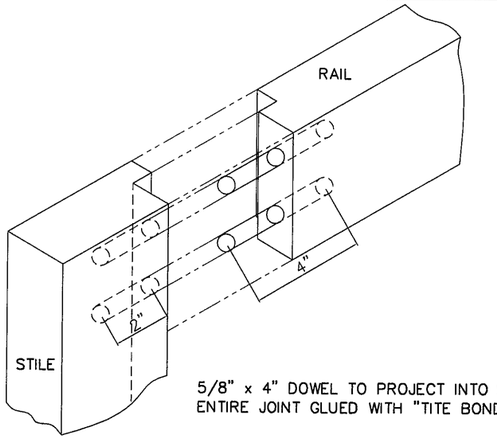

5/8" x 4" DOWEL TO PROJECT INTO STILE.
ENTIRE JOINT GLUED WITH "TITE BOND".

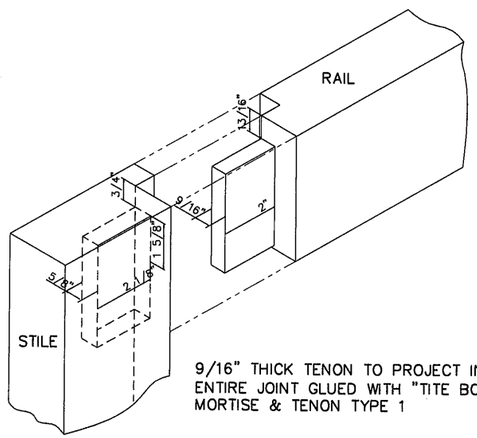

9/16" THICK TENON TO PROJECT INTO STILE.
ENTIRE JOINT GLUED WITH "TITE BOND"
MORTISE & TENON TYPE 1

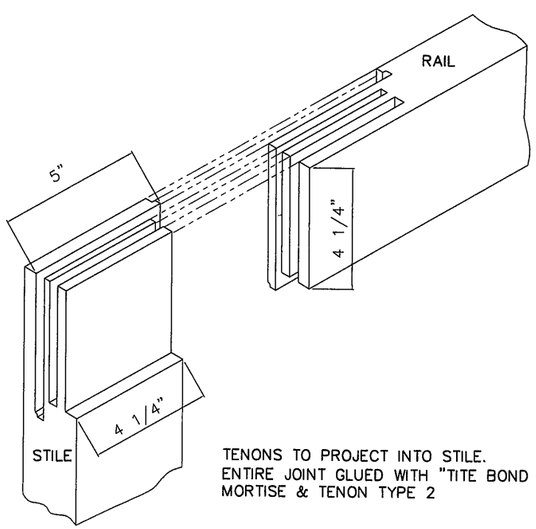

TENONS TO PROJECT INTO STILE.
ENTIRE JOINT GLUED WITH "TITE BOND
MORTISE & TENON TYPE 2

PANEL CORNER DETAILS

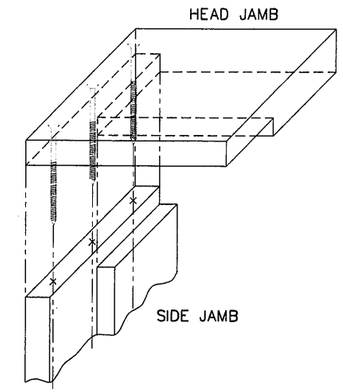

FRAME CORNERS HAVE HALF LAP JOINT
TYPICAL AT HEAD AND SILL
WITH (3) #12 x 3 1/2" SS SCREWS AND
GLUED WITH NP1 POLYURETHANE SEALANT.

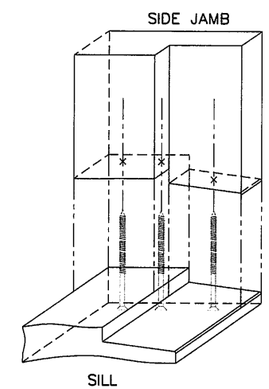

FRAME CORNER DETAILS

PRODUCT REVISED
as complying with the Florida
Building Code
Acceptance No 12-0614.03
Expiration Date 01/23/2013
By Ishaq I. Chaudhary
Miami Dade Product Control

Engr: JAVAD AHMAD
CIVIL
FLA. PE # 70592
C.A.N. 3538

OCT 04 2012

AL-FAROOQ CORPORATION
ENGINEERS & PRODUCT DEVELOPMENT
1235 S.W. 87 AVE
MIAMI, FLORIDA 33174
TEL. (305) 264-8100 FAX. (305) 262-6978
COMP-ANL\W07-93HWD

AMERICAN OUTSWING WOOD PATIO DOOR (L.M.I.)
HARTMAN WINDOWS & DOORS, LLC
531 SOUTHERN BLVD.
WEST PALM BEACH, FL 33405
TEL. (561) 296-9600 FAX. (561) 296-9601

revisions:

no	date	by	description
A	08.28.08		REV. PER BCCO COMMENTS
B	05.16.12		NO CHANGE THIS SHEET
C	09.28.12		NO CHANGE THIS SHEET

date: 11-05-07
scale: 3/8" = 1"
dr. by: HAMID
chk. by:

drawing no.
W07-93

sheet 10 of 10