MIAMI-DADE COUNTY
PRODUCT CONTROL SECTION
11805 SW 26 Street, Room 208
Miami, Florida 33175-2474
T (786) 315-2590 F (786) 315-2599
www.miamidade.gov/economy

DEPARTMENT OF REGULATORY AND ECONOMIC RESOURCES (RER)
BOARD AND CODE ADMINISTRATION DIVISION

NOTICE OF ACCEPTANCE (NOA)

Master Wall Inc.
P.O. Box 397
Fortson, GA 31808

SCOPE:

This NOA is being issued under the applicable rules and regulations governing the use of construction materials. The documentation submitted has been reviewed and accepted by Miami-Dade County RER-Product Control Section to be used in Miami Dade County and other areas where allowed by the Authority Having Jurisdiction (AHJ).

This NOA shall not be valid after the expiration date stated below. The Miami-Dade County Product Control Section (In Miami Dade County) and/or the AHJ (in areas other than Miami Dade County) reserve the right to have this product or material tested for quality assurance purposes. If this product or material fails to perform in the accepted manner, the manufacturer will incur the expense of such testing and the AHJ may immediately revoke, modify, or suspend the use of such product or material within their jurisdiction. RER reserves the right to revoke this acceptance, if it is determined by Miami-Dade County Product Control Section that this product or material fails to meet the requirements of the applicable building code.

This product is approved as described herein, and has been designed to comply with the Florida Building Code, including the High Velocity Hurricane Zone.

DESCRIPTION: Aggre-flex and Rollershield Drainage EIF Systems

APPROVAL DOCUMENT: Drawing **MDC-120921**, titled "Master Wall Aggre-flex and Rollershield Drainage EIFS", Sheets 1 through 5 of 5, dated 03/23/2012, prepared by the manufacturer, signed and sealed by Ray F. Tucker, P.E., bearing the Miami-Dade County Product Control revision stamp with the Notice of Acceptance number and expiration date by the Miami-Dade County Product Control Section.

MISSILE IMPACT RATING: Large and Small Missile Impact Resistant

LABELING: Each unit shall bear a permanent label with the manufacturer's name or logo, city, state and following statement: "Miami-Dade County Product Control Approved", unless otherwise noted herein. Each container (bucket or drum) needs to be labeled. Unit is further defined as each roll of reinforcing mesh.

RENEWAL of this NOA shall be considered after a renewal application has been filed and there has been no change in the applicable building code negatively affecting the performance of this product.

TERMINATION of this NOA will occur after the expiration date or if there has been a revision or change in the materials, use, and/or manufacture of the product or process. Misuse of this NOA as an endorsement of any product, for sales, advertising or any other purposes shall automatically terminate this NOA. Failure to comply with any section of this NOA shall be cause for termination and removal of NOA.

ADVERTISEMENT: The NOA number preceded by the words Miami-Dade County, Florida, and followed by the expiration date may be displayed in advertising literature. If any portion of the NOA is displayed, then it shall be done in its entirety.

INSPECTION: A copy of this entire NOA shall be provided to the user by the manufacturer or its distributors and shall be available for inspection at the job site at the request of the Building Official.

This NOA **renews and revises NOA # 10-0127.01** and consists of this page 1 and evidence page E-1, as well as approval document mentioned above.

The submitted documentation was reviewed by **Carlos M. Utrera, P.E.**

MIAMI-DADE COUNTY APPROVED

11/28/2012

NOTICE OF ACCEPTANCE: EVIDENCE SUBMITTED

A. DRAWINGS

1. Drawing **MDC-120921**, titled "Master Wall Aggre-flex and Rollershield Drainage EIFS", Sheets 1 through 5 of 5, dated 03/23/2012, prepared by the manufacturer, signed and sealed by Ray F. Tucker, P.E.

B. TESTS

1. Test reports on 1) Air Infiltration Test, per FBC, TAS 202-94
   2) Uniform Static Air Pressure Test, Loading per FBC TAS 202-94
   3) Water Resistance Test, per FBC, TAS 202-94
   4) Large Missile Impact Test per FBC, TAS 201-94
   5) Cyclic Wind Pressure Loading per FBC, TAS 203-94

   along with marked-up drawings and installation diagram of Master Wall EIF systems, prepared by Intertek, Test Report No. **G100445013MID-01**, dated 08/30/2011, signed and sealed by Rick Curkeet.

   "Submitted under NOA # 10-0127.01"

2. Test reports on Air Infiltration Test, per FBC, TAS 202-94, Uniform Static Air Pressure Test, Loading per FBC TAS 202-94, Water Resistance Test, per FBC, TAS 202-94, Large Missile Impact Test per FBC, TAS 201-94, Cyclic Wind Pressure Loading per FBC, TAS 203-94 of Master Wall EIF systems, prepared by Intertek, Test Report No. **3186812MID-01**, dated 08/24/2009, signed and sealed by Rick Curkeet.

   "Submitted under NOA # 01-0404.06"

3.

Laboratory	Test	Date	Signature
CTLA-620W	PA202 & 203	03/27/01	Ramesh C. Patel, P.E

C. CALCULATIONS

1. None.

D. QUALITY ASSURANCE

1. Miami-Dade Department of Regulatory and Economic Resources (RER)

E. MATERIAL CERTIFICATIONS

1. Notice of Acceptance No. **11-0926.07**, issued to Dyplast Products LLC, for their Expanded Polystyrene Block Type Insulation, approved on 11/10/2011 and expiring on 01/11/2017.

F. STATEMENTS

1. Drawing No. **MDC-120921** statement of code conformance to 2010 FBC issued by the manufacturer, signed and sealed by Ray F. Tucker, P.E.

   "Submitted under NOA # 01-0404.06"

2. No financial letter issued by Master Wall, Inc, dated 12/08/2002, signed by Dennis Deppner.

11/28/2012

Carlos M. Utrera, P.E.
Product Control Examiner
NOA No. 12-0619.12
Expiration Date: May 30, 2017
Approval Date: December 6, 2012

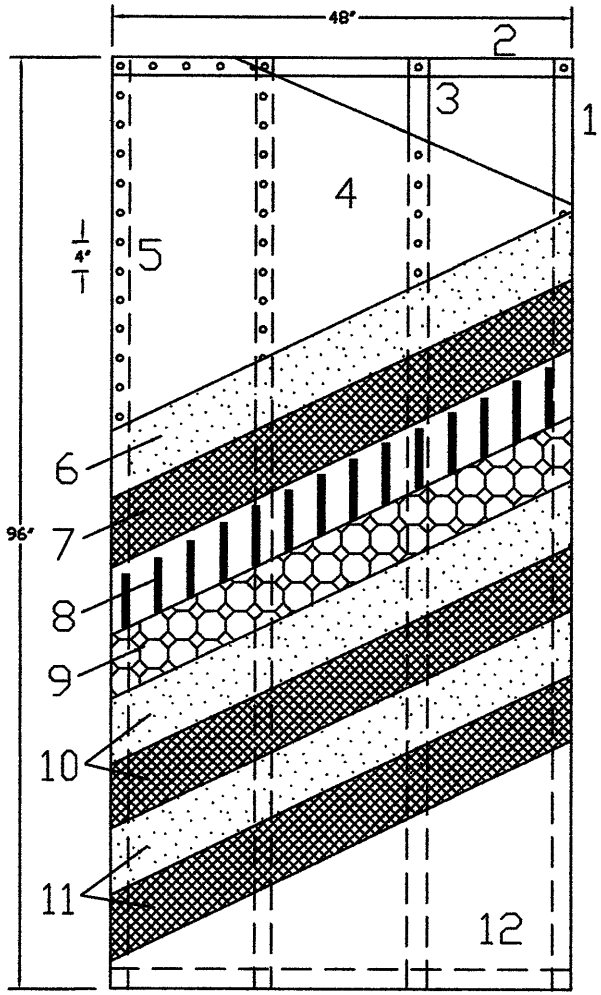

Material List

1. 6" x 16 gage (54 mil) steel studs at 16" o.c.
2. 6" x 16 gage (54 mil) steel track
3. Fastened to steel studs with #8 x ½" self drilling pan head screw
4. 5/8" Dens Glass Gold sheathing meeting ASTM C1177
5. Minimum #6 x 1-1/4" bugle head screws spaced at 4" o.c. along framing members
6. Master Wall F&M base coat mixed 1:1 by weight with Portland cement and water.
7. Master Wall Hi-Tech 6.0 oz/sy fiberglass reinforcing mesh embedded in the Master Wall base coat. Lap Hi-Tech mesh a minimum of 2-1/2" at all edges.
8. Adhere the expanded polystyrene (EPS) insulation board with Master Wall F&M Mixture. The adhesive is applied with a 3/8" x ½" notched trowel with notches spaced a maximum of 1-1/2" o.c. The adhesive shall be applied to the back side of the EPS in a vertical orientation.
9. Minimum 1" thick insulation board meeting Master Wall specifications. Insulation board shall possess a current NOA with Miami Dade County.
10. Master Wall Ultra Mesh, 21.0 oz/sy fiberglass reinforcing mesh embedded into the F&M base coat. Butt mesh tightly, do not overlap
11. Master Wall Standard reinforcing mesh, 4.5 oz/sy embedded into the F&M base coat. Lap mesh a minimum of 2-1/2" at all edges.
12. Master Wall Superior Finish, 100% acrylic based dirt pickup resistant (DPR) finish.

General Notes

1. The system has been designed in accordance with the Florida Building Code 2010 Edition and its latest supplements.
2. This system has been tested in accordance with Miami Dade County Protocols TAS 201, TAS 202 and TAS 203; Impact, structural and cyclic testing.
3. This system shall be applied by a licensed plastering contractor following this notice of acceptance, the recommendations of Master Wall Inc. and the applicable sections of the Florida Building Code.
4. The Engineer and/or Architect of record for each project using this system shall size all stud framing to ensure conformance with stud deflection and stress limitations as required by all governing codes and this document.
5. Insulation boards shall be positioned in a running bond pattern.
6. All steel studs shall be structural with 1-5/8" minimum flange width and have a minimum yield strength of 33000 psi.
7. Details on sheets 4 and 5 are typical and show intent to prevent water infiltration into and behind this system. Alternative details and specific conditions not covered by the typical details are the responsibility of the licensed design professionals.

DESIGN PRESSURE +/- 110psf

Assembly H110F1EIFS

PRODUCT REVISED
as complying with the Florida Building Code
Acceptance No 12-0619.12
Expiration Date 05/30/2017
By _____
Miami Dade Product Control

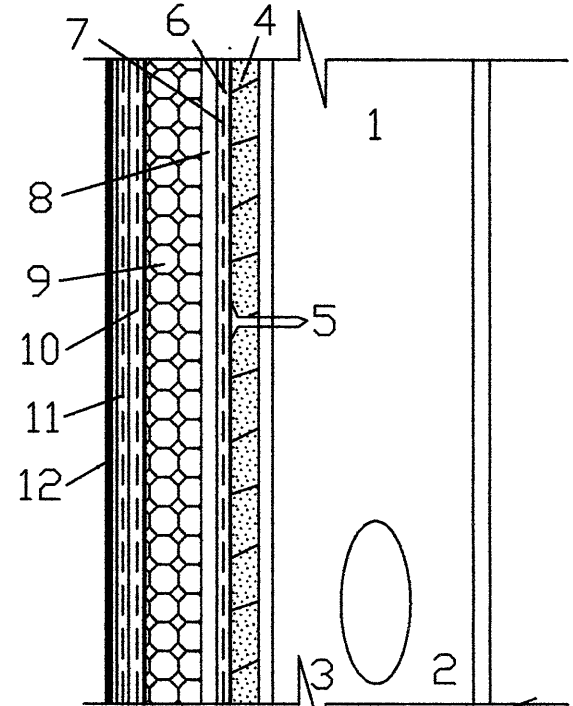

R.F. TUCKER
LICENSED
No. 15896
STATE OF
FLORIDA
PROFESSIONAL ENGINEER

SEP 25 2017

R.F. Tucker, P.E. Registration Number 15896

Sheet 1 of 5 Date Issued: 03/23/12	Master Wall Aggre-flex EIFS Large Scale Missile Dens Glass Gold Substrate
Drawing Number: MDC-120921	

Master Wall Inc.
Building a Culture of Excellence
P.O. Box 397 Fortson, GA 31808 800-755-0825 FAX 706-569-0092
masterwall.com

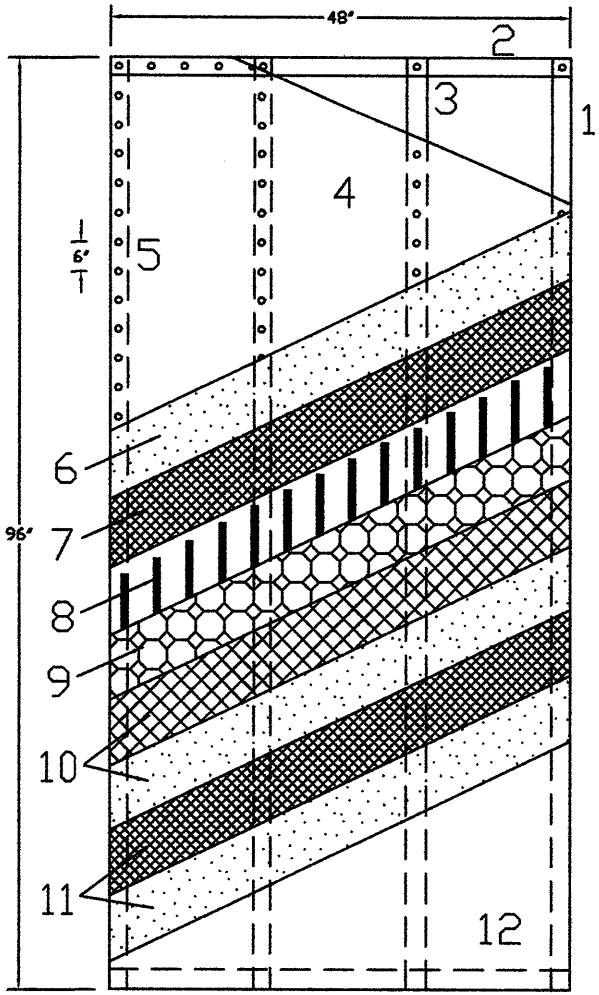

Material List
1. 3-5/8" x 18 gage (43 mil) steel studs at 16" o.c.
2. 3-5/8" x 18 gage (43 mil) steel track
3. Fastened to steel studs with #8 x ¾" self drilling pan head screw
4. 5/8" Dens Glass Gold sheathing
5. Minimum #6 x 1-1/4" bugle head screws spaced at 6" o.c. along framing members
6. Master Wall Rollershield Air/Water Barrier.
7. Master Wall Hi-Tech 6.0 oz/sy fiberglass reinforcing mesh embedded in the Rollershield Air/Water Barrier. Lap Hi-Tech mesh a minimum of 2-1/2" at all edges.
8. Adhere the expanded polystyrene (EPS) insulation board with Master Wall F&M Mixture, mixed 1:1 with Portland cement. The adhesive is applied with a 3/8" x 1/2" notched trowel with notches spaced a maximum of 1-1/2" o.c. The adhesive shall be applied to the back side of the EPS in a vertical orientation.
9. Minimum 1" thick insulation board meeting Master Wall specifications. Insulation board shall possess a current NOA with Miami Dade County.
10. Master Wall Ultra Mesh, 21.0 oz/sy fiberglass reinforcing mesh embedded into the F&M base coat. Butt mesh tightly, do not overlap
11. Master Wall Standard reinforcing mesh, 4.5 oz/sy embedded into the F&M base coat. Lap mesh a minimum of 2-1/2" at all edges.
12. Master Wall Superior Finish, 100% acrylic based dirt pickup resistant (DPR) finish.

General Notes
1. The system has been designed in accordance with the Florida Building Code 2010 Edition and its latest supplements.
2. This system has been tested in accordance with Miami Dade County Protocols TAS 201, TAS 202 and TAS 203; Impact, structural and cyclic testing.
3. This system shall be applied by a licensed plastering contractor following this notice of acceptance, the recommendations of Master Wall Inc. and the applicable sections of the Florida Building Code.
4. The Engineer and/or Architect of record for each project using this system shall size all stud framing to ensure conformance with stud deflection and stress limitations as required by all governing codes and this document.
5. Insulation boards shall be positioned in a running bond pattern.
6. All steel studs shall be structural with 1-5/8" minimum flange width and have a minimum yield strength of 33000 psi.

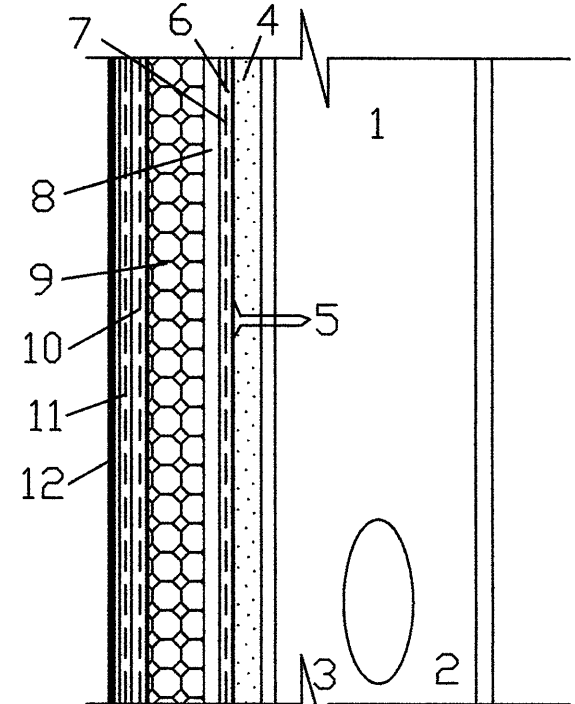

PRODUCT REVISED
as complying with the Florida Building Code
Acceptance No 12-0619.12
Expiration Date 05/30/2017
By
Miami Dade Product Control

SEP 25 2012

R.F. TUCKER
LICENSED
No. 15896
STATE OF FLORIDA
PROFESSIONAL ENGINEER

Design Pressure +/- 70 psf

Assembly H070F2EIFS

R.F. Tucker, P.E. Registration Number 15896

Sheet 2 of 5
Date Issued: 03/23/12
Drawing Number:
MDC-120921

Master Wall Rollershield Drainage EIFS
Installed over an Dens Glass Gold Substrate

Master Wall Inc.
Building a Culture of Excellence
P.O. Box 397 Fortson, GA 31808 800-755-0825 FAX 706-569-0092
masterwall.com

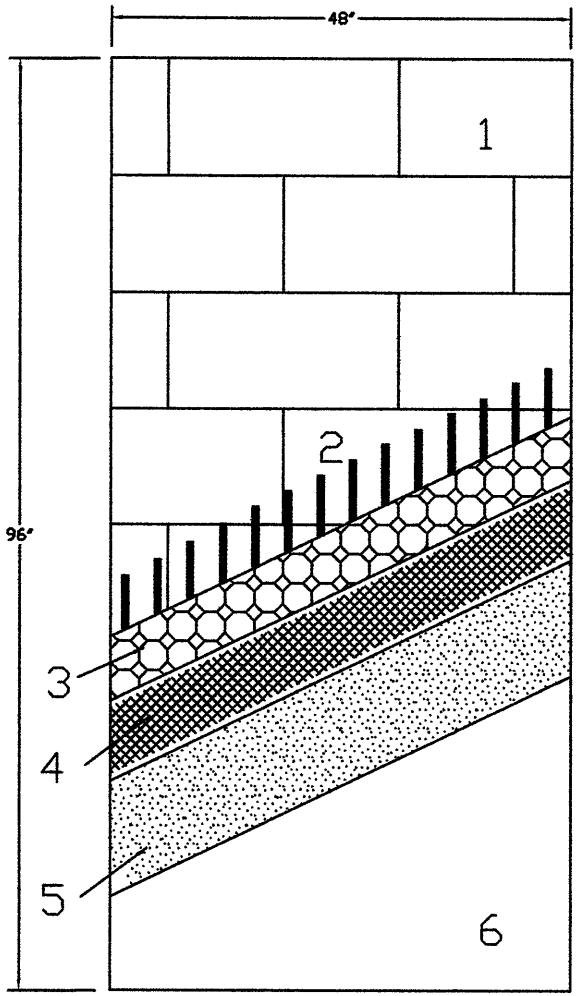

Material List

1. C.B.S (CMU) Wall
2. Adhere the expanded polystyrene (EPS) insulation board to a clean, dry unpainted CMU with with Master Wall F&M adhesive. The adhesive is applied with a 3/8" x ½" notched trowel with notches spaced a maximum of 1-1/2" o.c. The adhesive shall be applied to the back side of the EPS in a vertical orientation.
3. Minimum 3/4" thick insulation board meeting Master Wall specifications. Insulation board shall possess a current NOA with Miami Dade County.
4. Master Wall Standard Mesh, 4.5 oz/sy fiberglass reinforcing mesh embedded into base coat. Lap mesh a minimum of 2-1/2" at all edges.
5. Master Wall F&M base coat.
6. Master Wall Superior Finish, 100% acrylic based dirt pickup resistant (DPR) finish.

General Notes

1. The system has been designed in accordance with the Florida Building Code 2010 Edition and its latest supplements.
2. This system has been tested in accordance with Miami Dade County Protocols TAS 202 and TAS 203; structural and cyclic testing.
3. This system shall be applied by a licensed plastering contractor following this notice of acceptance, the recommendations of Master Wall Inc. and the applicable sections of the Florida Building Code.
4. The Engineer and/or Architect of record for each project using this system shall size the substrate to ensure conformance with stud deflection and stress limitations as required by all governing codes and this document.
5. Insulation boards shall be positioned in a running bond pattern.
6. Details on sheets 4 and 5 are typical and show intent to prevent water infiltration into and behind this system. Alternative details and specific conditions not covered by the typical details are the responsibility of the licensed design professionals.

DESIGN PRESSURE +/- 140psf

PRODUCT REVISED
as complying with the Florida Building Code
Acceptance No 12-0619.12
Expiration Date 05/30/2017
By
Miami Dade Product Control

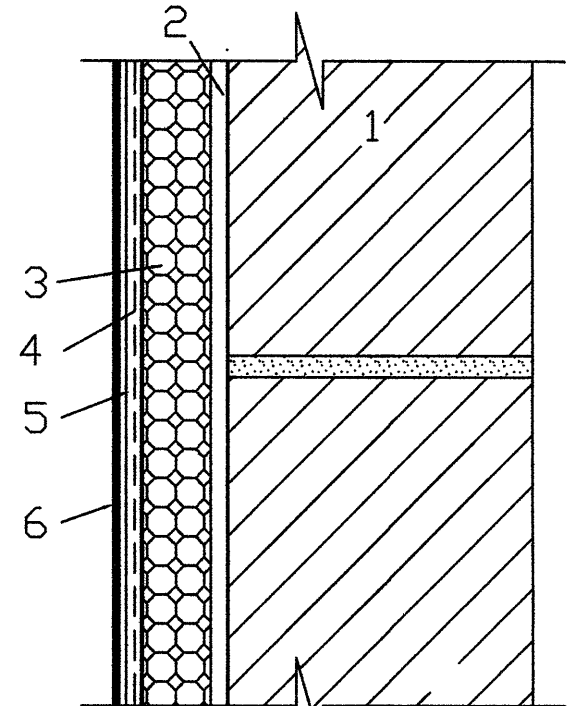

R. F. TUCKER
LICENSED
No. 15896
STATE OF
FLORIDA
PROFESSIONAL ENGINEER

SEP 25 2012

Assembly H140C1EIFS

R.F. Tucker, P.E. Registration Number 15896

Sheet 3 of 5 Date Issued: 03/23/12	Master Wall Aggre-flex EIFS Installed over an Impact-Resistant Substrate CMU Substrate
Drawing Number: MDC-120921	

Master Wall Inc.
Building a Culture of Excellence
P.O. Box 397 Fortson, GA 31808 800-795-0825 FAX 706-569-0092
masterwall.com

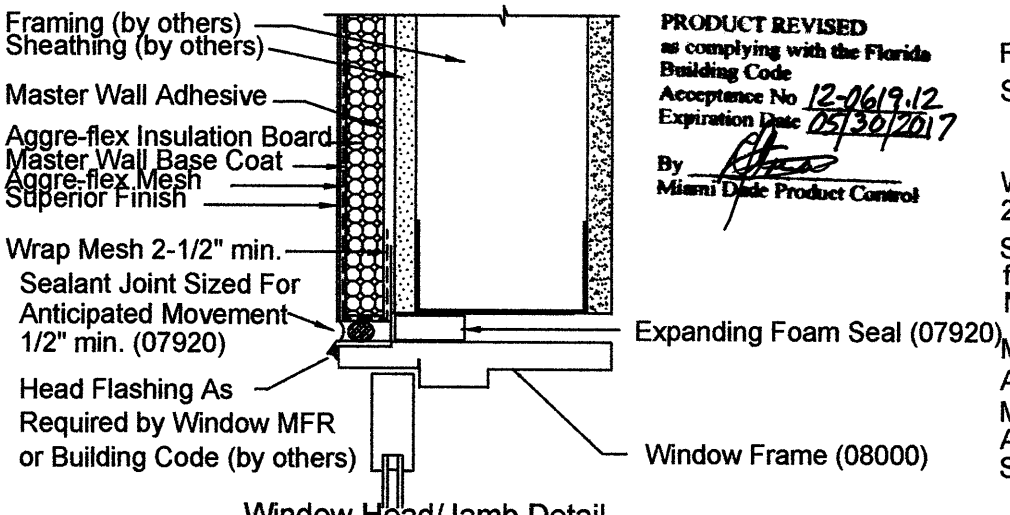

Window Head/Jamb Detail

PRODUCT REVISED
as complying with the Florida Building Code
Acceptance No 12-0619.12
Expiration Date 05/30/2017
By
Miami Dade Product Control

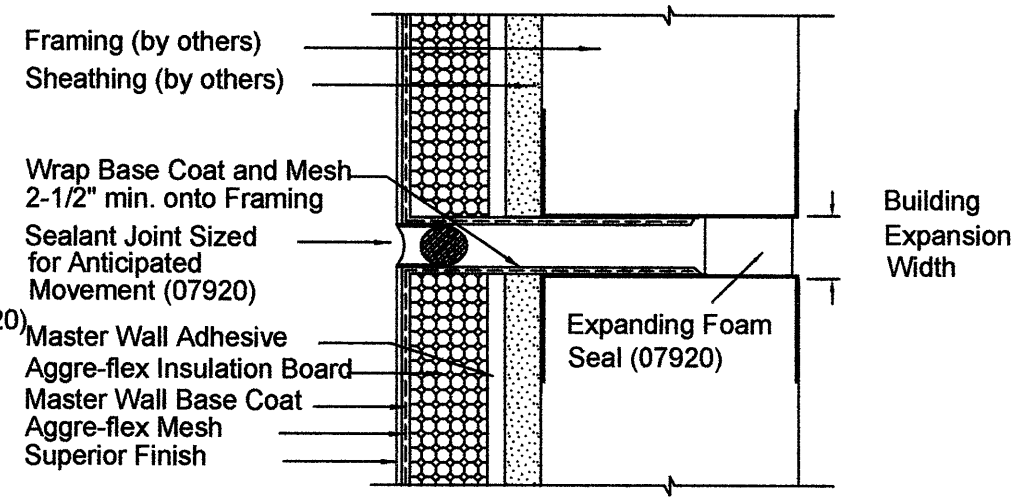

Typical Vertical Expansion Joint

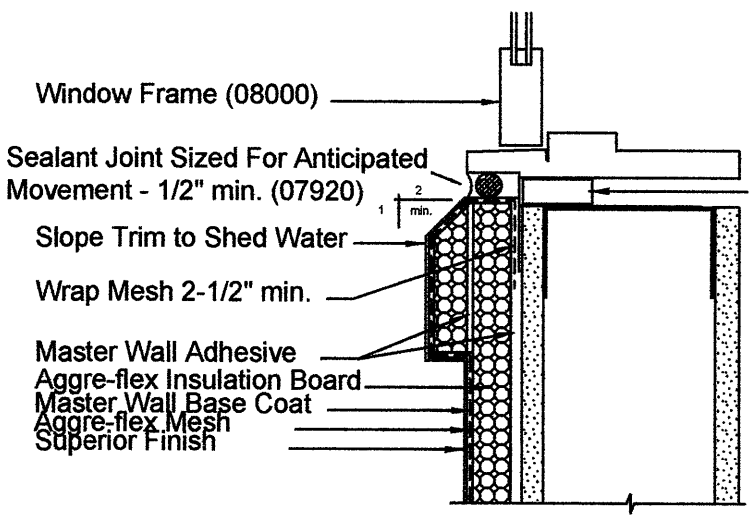

Window Sill Detail

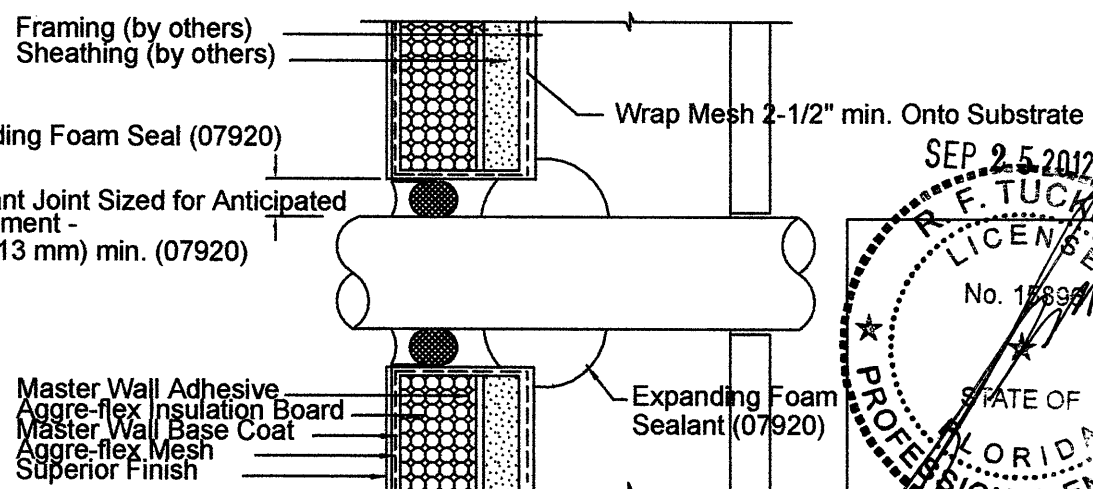

Pipe Penetration Detail

SEP 25 2012
R. F. TUCKER
LICENSE
No. 15896
STATE OF
FLORIDA
PROFESSIONAL ENGINEER

R.F. Tucker, P.E. Registration Number 15896

Sheet 4 of 5 Date Issued: 03/23/12	Master Wall Aggre-flex EIFS Assembly Details
Drawing Number: MDC-120921	

Master Wall Inc.
Building a Culture of Excellence
P.O. Box 397 Fortson, GA 31808 800-755-0825 FAX 706-569-0092
masterwall.com

PRODUCT REVISED
as complying with the Florida Building Code
Acceptance No 12-0619.12
Expiration Date 05/30/2017
By
Miami Dade Product Control

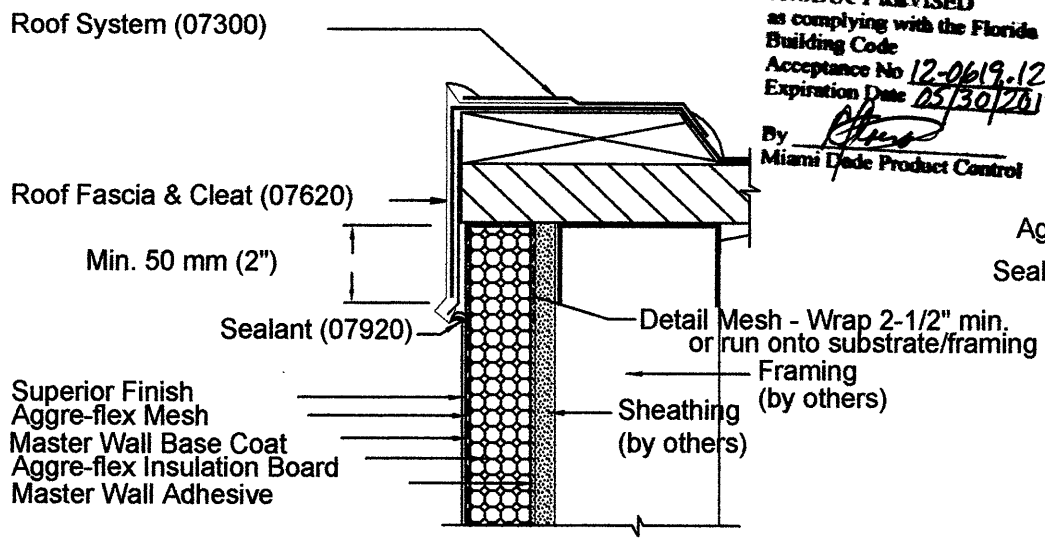

Cap Detail

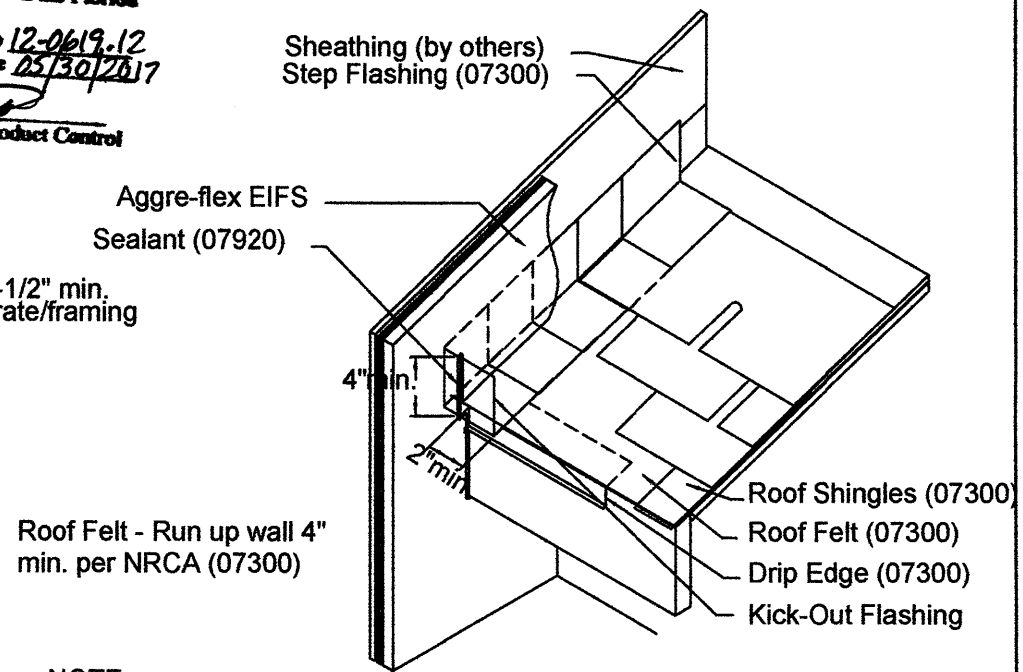

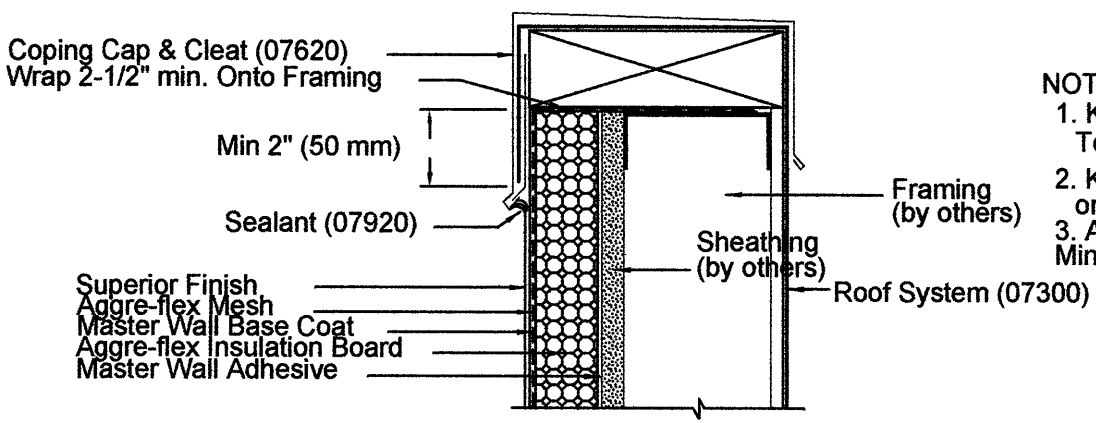

Cap Detail

NOTE:
1. Kickout Flashing Must Be Angled 100 Degrees min. To Allow For Proper Drainage
2. Kick Out Flashing Seams Must Be Soldered or Sealed with Appropriate Sealant.
3. Aggre-flex System Should Cover the Flashing a Minimum of 2" and should end about 1-2" (25-50 mm) Above Roof or in Accordance With Local Requirements

Typical Roof/Wall Intersection

SEP 25 2012
R.F. TUCKER
LICENSE
No. 15896
STATE OF
FLORIDA
PROFESSIONAL ENGINEER

R.F. Tucker, P.E. Registration Number 15896

Sheet 5 of 5 Date Issued: 03/23/12	Master Wall Aggre-flex EIFS Assembly Details
Drawing Number: MDC-120921	

Master Wall Inc.
Building a Culture of Excellence
P.O. Box 397 Fortson, GA 31808 800-755-0825 FAX 706-569-0092
masterwall.com