MIAMI-DADE COUNTY
DEPARTMENT OF REGULATORY AND ECONOMIC RESOURCES (RER)
BOARD AND CODE ADMINISTRATION DIVISION

MIAMI-DADE COUNTY
PRODUCT CONTROL SECTION
11805 SW 26 Street, Room 208
Miami, Florida 33175-2474
T (786) 315-2590 F (786) 315-2599
www.miamidade.gov/economy

NOTICE OF ACCEPTANCE (NOA)

Mitsubishi Plastics Composites America, Inc.
401 Volvo Parkway
Chesapeake, VA 23320

SCOPE:
This NOA is being issued under the applicable rules and regulations governing the use of construction materials. The documentation submitted has been reviewed and accepted by Miami-Dade County RER-Product Control Section to be used in Miami Dade County and other areas where allowed by the Authority Having Jurisdiction (AHJ).

This NOA shall not be valid after the expiration date stated below. The Miami-Dade County Product Control Section (In Miami Dade County) and/or the AHJ (in areas other than Miami Dade County) reserve the right to have this product or material tested for quality assurance purposes. If this product or material fails to perform in the accepted manner, the manufacturer will incur the expense of such testing and the AHJ may immediately revoke, modify, or suspend the use of such product or material within their jurisdiction. RER reserves the right to revoke this acceptance, if it is determined by Miami-Dade County Product Control Section that this product or material fails to meet the requirements of the applicable building code.

This product is approved as described herein, and has been designed to comply with the High Velocity Hurricane Zone of the Florida Building Code.

DESCRIPTION: "Alpolic and Alpolic/FR " Composite Wall Panel Systems

APPROVAL DOCUMENT: Drawing No. MPCA0002, titled "Alpolic and Alpolic/fr Composite Wall Panel Systems", sheets 1 through 11 of 11, prepared by Mitsubishi Plastic Composites America, Inc., dated November 11, 2002, last revision #4, dated June 10, 2012, signed & sealed by Robert James Amoruso, P.E., on November 08, 2012 bearing the Miami-Dade County Product Control Revision stamp with the Notice of Acceptance number and the expiration date by the Miami-Dade County Product Control Section.

MISSILE IMPACT RATING: Small Missile Impact Resistant

LABELING: Each panel shall bear a permanent label with the manufacturer's name or logo, city, state and the following statement: "Miami-Dade County Product Control Approved", unless otherwise noted herein.

RENEWAL of this NOA shall be considered after a renewal application has been filed and there has been no change in the applicable building code negatively affecting the performance of this product.

TERMINATION of this NOA will occur after the expiration date or if there has been a revision or change in the materials, use, and/or manufacture of the product or process. Misuse of this NOA as an endorsement of any product, for sales, advertising or any other purposes shall automatically terminate this NOA. Failure to comply with any section of this NOA shall be cause for termination and removal of NOA.

ADVERTISEMENT: The NOA number preceded by the words Miami-Dade County, Florida, and followed by the expiration date may be displayed in advertising literature. If any portion of the NOA is displayed, then it shall be done in its entirety.

INSPECTION: A copy of this entire NOA shall be provided to the user by the manufacturer or its distributors and shall be available for inspection at the job site at the request of the Building Official.

This NOA **revises & renews NOA # 11-0421.08** and consists of this page 1, evidence submitted pages E-1, E-2, & E-3 as well as approval document mentioned above.

The submitted documentation was reviewed by **Helmy A. Makar, P.E., M.S.**

MIAMI-DADE COUNTY APPROVED

Helmy A. Makar
11/15/2012

NOA No. 12-0625.12
Expiration Date: 08/09/2017
Approval Date: 11/15/2012

Mitsubishi Plastics Composites America, Inc.

NOTICE OF ACCEPTANCE: EVIDENCE SUBMITTED

1. EVIDENCE SUBMITTED UNDER PREVIOUS APPROVAL # 00-0315.07

A. DRAWINGS

1. *Drawing No. 2, titled "Alpolic and Alpolic/FR Composite Wall Panel Systems", prepared by C. W. Stater, P.E., dated April 16, 1999, last revision #1 dated February 13, 2001, sheets 1 through 5 of 5, signed and sealed by C. W. Stater, P.E.*

B. TESTS

1. *Test report on **Small Missile Impact** Test, Cyclic Wind Pressure Test, and Uniform Static Air Pressure Test on Alpolic and Alpolic/FR Composite Wall Panel Systems, prepared by Architectural Testing Inc., Report No. 01-35789.02, dated 05/31/00, signed and sealed by Allen Reeves, P.E.*
2. *Test report on Ignition Properties, prepared by Southwest Research Institute, Report No. 01-8361-038, dated 10/28/96, signed by Betty J. Covey and Alex B. Wenzel.*
3. *Test report on Flame Spread Index and Smoke Developed Index, prepared by Southwest Research Institute, Report No. 01-7520-359a, dated 09/26/96, signed by Anthony L. Sauceda and Alex B. Wenzel.*

C. CALCULATIONS

1. *Calculations titled "Structural Calculations for Composite Panel System", pages 1 through 22 of 22, dated April 13, 2000, prepared by C. W. Stater, P.E., signed and sealed by C. W. Stater, P.E.*

D. MATERIAL CERTIFICATIONS

1. *Spec. Data issued by Alcoa Mill Products, dated November 08, 2000, with chemical composition and mechanical properties of Aluminum Alloy 3105-H14.*
2. *Tensile Test Report No 01-35789.03, prepared by Architectural Testing, dated July 07, 2000, signed and sealed by Allen N. Reeves, P.E.*

2. EVIDENCE SUBMITTED UNDER PREVIOUS APPROVAL #03-0130.06

A. DRAWINGS

1. *Drawing No. 1, titled " Alpolic and Alpolic/fr Composite Wall Panel Systems ", sheets 1 through 10 of 10, prepared by Mitsubishi Chemical America, Inc., signed and sealed by Christopher W. Stater, P.E., dated November 11, 2002.*

B. TESTS

1. *Test report on **Small Missile Impact** Test, Cyclic Wind Pressure Test, and Uniform Static Air Pressure Test on Alpolic and Alpolic/FR Composite Wall Panel Systems, prepared by Architectural Testing Inc., Report No. 01-43055.01, dated January 07, 2003, signed and sealed by Joseph A. Reed, P.E.*

Helmy A. Makar, P.E., M.S.
Product Control Unit Supervisor
NOA No. 12-0625.12
Expiration Date: 08/09/2017
Approval Date: 11/15/2012

C. CALCULATIONS

1. None.

D. MATERIAL CERTIFICATIONS

1. Tensile Test Report No 01-43055.02, prepared by Architectural Testing, dated March 04, 2003, signed and sealed by Joseph A. Reed, P.E.

3. EVIDENCE SUBMITTED UNDER PREVIOUS APPROVAL #06-0531.12

A. DRAWINGS

1. None.

B. TESTS

1. None.

C. CALCULATIONS

1. None.

D. QUALITY ASSURANCE

1. By Miami-Dade County Building Code Compliance Office.

E. MATERIAL CERTIFICATIONS

1. None.

4. EVIDENCE SUBMITTED UNDER PREVIOUS APPROVAL # 09-0923.05

A. DRAWINGS

1. Drawing No. 1, titled " Alpolic and Alpolic/fr Composite Wall Panel Systems ", sheets 1 through 10 of 10, prepared by Mitsubishi Chemical America, Inc., dated 11/11/02, last revision #1 dated 09/01/09, signed and sealed by Robert A. Walz, P.E.

B. TESTS

1. None.

C. CALCULATIONS

1. None.

D. QUALITY ASSURANCE

1. By Miami-Dade County Building Code Compliance Office.

E. MATERIAL CERTIFICATIONS

1. None.

Helmy A. Makar, P.E., M.S.
Product Control Unit Supervisor
NOA No. 12-0625.12
Expiration Date: 08/09/2017
Approval Date: 11/15/2012

NOTICE OF ACCEPTANCE: EVIDENCE SUBMITTED

5. EVIDENCE SUBMITTED UNDER PREVIOUS APPROVAL # 11-0421.08

A. DRAWINGS

1. *None.*

B. TESTS

1. *None.*

C. CALCULATIONS

1. *None.*

D. QUALITY ASSURANCE

1. *By Miami-Dade County Building and Neighborhood Compliance Department.*

E. MATERIAL CERTIFICATIONS

1. *None.*

6. NEW EVIDENCE SUBMITTED

A. DRAWINGS

1. *Drawing No. MPCA0002, titled "Alpolic and Alpolic/fr Composite Wall Panel Systems", sheets 1 through 11 of 11, prepared by Mitsubishi Plastic Composites America, Inc., dated November 11, 2002, last revision #4, dated June 10, 2012, signed & sealed by Robert James Amoruso, P.E., on November 08, 2012.*

B. TESTS

1. *Test report on **Small Missile Impact** Test, Cyclic Wind Pressure Test, and Uniform Static Air Pressure Test on Alpolic and Alpolic/FR Composite Wall Panel Systems, prepared by Architectural Testing Inc., Report No. 67392.01-109-18, dated October 27, 2006, signed and sealed by Joseph A. Reed, P.E., on May 30, 2012.*

C. CALCULATIONS

1. *Calculations titled "Installation Anchorage Analysis", pages 1 through 10 of 10, dated May 31, 2012, prepared by Robert James Amoruso, P.E., signed and sealed by Robert James Amoruso, P.E.*

D. QUALITY ASSURANCE

1. *By Miami-Dade County Department of Regulatory and Economic Resources.*

E. MATERIAL CERTIFICATIONS

1. *None.*

Helmy A. Makar, P.E., M.S.
Product Control Unit Supervisor
NOA No. 12-0625.12
Expiration Date: 08/09/2017
Approval Date: 11/15/2012

ALPOLIC and ALPOLIC/FR (FIRE RESISTIVE) COMPOSITE WALL PANEL SYSTEMS FOR SMALL MISSILE IMPACT

GENERAL NOTES

1. THESE ALPOLIC AND ALPOLIC/FR COMPOSITE PANELS SHALL BE USED FOR WALL CONSTRUCTION, SOFITS, AND OTHER EXTERIOR DETAILS WHOSE REQUIREMENTS FOR POSITIVE AND NEGATIVE PRESSURES ARE WITHIN THEN VALUES STATED IN NOTE 2 OF THIS DRAWING. EACH ACTUAL WALL PROJECT SHALL BE CONSTRUCTED USING THE DETAILS SHOWN ON THESE DRAWINGS AS MINIMUM REQUIRED SPECIFICATIONS
2. THE WALL DESIGN ALLOWABLE PRESSURES FOR THESE WALL PANEL SYSTEMS ARE:
   - 2.1. KISTLER McDOUGALL EXTRUSIONS: + 153 PSF/ -153 PSF
   - 2.2. SAF METAL FABRICATION EXTRUSIONS: + 70 PSF/ -90 PSF.
3. THESE ALPOLIC and ALPOLIC/fr COMPOSITE WALL PANEL SYSTEMS ARE TESTED IN ACCORDANCE WITH THE FOLLOWING PROTOCOLS PER THE 2010 FLORIDA BUILDING CODE:

   TAS-201-94, IMPACT TEST, SMALL MISSILE
   TAS-202-94, UNIFORM STATIC AIR PRESSURE TEST
   TAS-203-94, CYCLIC WIND PRESSURE TEST

   AND THEY SHALL BE INSTALLED AS SHOWN IN THESE APPROVED DRAWINGS.

MATERIAL SPECIFICATIONS:

ALUMINUM EXTRUSIONS

1. MATERIAL: M2, F2, A2, HS, and HR ARE EXTRUDED ALUMINUM ALLOY 6063 WITH A T6 TEMPER By Kistler McDougall.
2. MATERIAL: 37893 (CAY-1009) TEE, 37894 (CAY-1010) FEMALE, 37899 (CAY-1011) MALE, 38500B (CAY-1012) STIFFENER AND 38499A (CAY-1013) RETAINER ARE EXTRUDED ALUMINUM ALLOY 6063 WITH A T6 TEMPER By SAF Metal Fabication (FORMALLY CAY ARCHITECTURAL PRODUCTS).
3. FINISH: MILL FINISH

COMPOSITE PANEL

1. ALPOLIC AND ALPOLIC/FR ALUMINUM COMPOSITE METAL PANEL 4MM THICK (0.157") AND 6MM THICK (0.236") AS MANUFACTURED BY MITSUBISHI PLASTICS COMPOSITES AMERICA, INC., CHESAPEAKE, VA
2. CORE: THERMOPLASTIC MATERIAL WHICH IN COMPOSITE ASSEMBLY MEETS PERFORMANCE CHARACTERISTICS SPECIFIED.
3. FACE SHEET: 0.020" ALUMINUM 3105-H14 ALLOY
4. FINISH: FLUROPOLYMER RESIN COATING.
5. MAXIMUM DIMENSIONS: 62" WIDE X 288" LONG
7. TECHNICAL DATA

DESCRIPTION	TEST	4MM ALPOLIC	4MM ALPOLIC/fr	6MM ALPOLIC
SPECIFIC GRAVITY		1.38	1.90	1.23
WEIGHT		1.12 LB/SQ.FT	1.56 LB/SQ.FT	1.50 LB/SQ.FT
TENSILE STRENGTH	ASTM E-8	7452 PSI	5693 PSI	5399 PSI
YIELD STRENGTH	ASTM E-8	NDY	NDY	NDY
ELONGATION	ASTM E-8	16%	8%	13%
PUNCHING SHEAR RESISTANCE (1"DIA.)	ASTM D-732	4025 PSI	4637 PSI	2816 PSI
PUNCHING SHEAR MAX LOAD	ASTM D-732	1920 PSI	2259 PSI	2121 LBS
BOND INTEGRITY VERTICAL PULL	ASTM C-297	1806 PSI	427 PSI	1664 PSI
DRUM PEEL	ASTM D-1781-76	33.6 IN-LB/IN	27.6 IN-LB/IN	33.6 IN-LB/IN
FLATWISE SHEAR	ASTM C-273	1225 PSI	949 PSI	1195 PSI
RATE OF BURNING	ASTM D-635	CC1	--	--
FLAME SPREAD INDEX	ASTM E-84	00	00	00
SMOKE DEVELOPED INDEX	ASTM E-84	00	10	10
SELF IGNITION TEMPERATURE	ASTM D-1929	752°F	837°F	752°F
FLASH IGNITION TEMPERATURE	ASTM D-1929	716°F	811°F	716°F
SURFACE FLAMMABILITY	ASTM E-108-88	PASSED	PASSED	PASSED
SOUND TRANSMISSION	ASTM E-413	STC-26	--	STC-26

FRAMING & ACCESSORIES

1. STEEL STUDS AND TRACKS: 16 GA. MIN. GALVANIZED STEEL WITH MIN. PROPERTIES OF 50 KSI YIELD, 65 KSI ULTIMATE.
2. STUD & TRACK FASTENERS: #12 x 1-1/2" HEX WASHER HEAD HEAVY DUTY TEKS 4, 4.5, OR 5 BY ITW BUILDEX SCREW OR STUD & TRACK FASTENERS: #12 x 1-1/2" HEX WASHER HEAD TEKS SELECT BY ITW BUILDEX SCREW.
3. PANEL FASTENERS: #10 x 1" HEX WASHER HEAD ITW BUILDEX TEK SCREWS SPACED AT 16" O.C.
4. STIFFENER FASTENERS: #10 x 1" HEX WASHER HEAD ITW BUILDEX TEK SCREWS.
5. JOINT SILICONE: DOW CORNING #795 SILICONE SEALANT.
6. STRUCTURAL SILICONE: DOW CORNING #1199 SILICONE SEALANT.
7. BACKER ROD: 3/4" DIA. DENVER FOAM OPEN CELL BACKER ROD.
8. THE STRUCTURAL ADEQUACY OF THE 16 GA. GALVANIZED STEEL STUDS AND THE REST OF THE STRUCTURAL FRAMING SUPPORTING THE METAL PANELS IS NOT PART OF THIS PRODUCT CONTROL APPROVAL AND IT SHALL BE REVIEWED BY THE STRUCTURAL PLANS EXAMINER OF THE CORRESPONDING BUILDING DEPARTMENT.

ROBERT JAMES AMORUSO
LICENSE
No 49752
STATE OF FLORIDA
PROFESSIONAL ENGINEER
11/9/12

PRODUCT REVISED
as complying with the Florida Building Code
Acceptance No 12-0625.12
Expiration Date 08/09/2017
By
Miami Dade Product Control

Robert J. Amoruso, P.E.
FL P.E. No. 49752

REV.	BY	DATE	CHANGE
4	RJA	6/10/12	UPDATE TO 2010 FBC
3	TH	1/10/12	EXTRUSION AND PANEL NOTE CHANGES
1	TH	9/01/09	SEN NOTE 1 WAS WALL CONSTRUCTION ONLY

UNLESS OTHERWISE SPECIFIED DIMENSIONS ARE IN INCHES
TOLERANCES ARE:
FRACTIONS ± 1/32 DECIMALS .XX ± .01 .XXX ± .005 ANGLES ± 1/2

MATERIAL

FINISH

DO NOT SCALE DRAWING

CONTRACT NO.

APPROVALS	DATE
DRAWN	
ENGINEERING MS	11/11/02
PROJ MGMT	
PRODUCTION	

PTC PRODUCT DESIGN GROUP, LLC
PO BOX 520775
LONGWOOD, FLORIDA 32752
FBPE C.A. NO. 28935
Phone: 321.690.1788, Fax: 321.690.1789
Email: info@ptc-corp.com

MITSUBISHI PLASTICS COMPOSITES AMERICA, INC.

ALPOLIC and ALPOLIC/fr COMPOSITE WALL PANEL SYSTEMS

SIZE B | CAGE CODE | DWG NO. MPCA0002 | REV 4

SCALE SHOWN | SHEET 1 OF 11

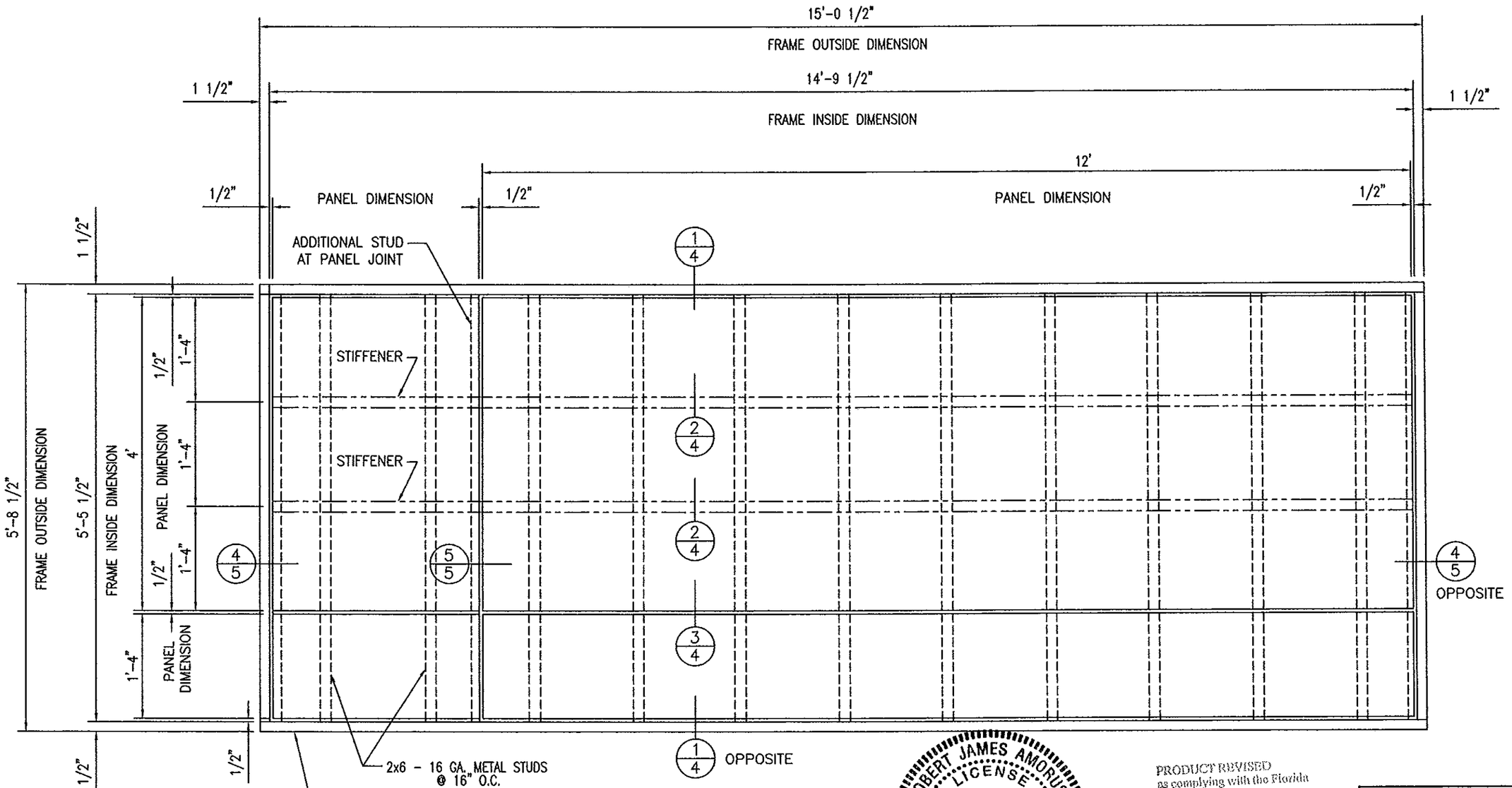

THE WOOD BUCK FRAME DETAILED IN THIS DRAWING IS FOR TEST PURPOSES ONLY AND IS NOT INTENDED AS A RECOMMENDATION FOR ACTUAL CONSTRUCTION.

PANEL ELEVATION

3/4" = 1'-0"

ROBERT JAMES AMORUSO
LICENSE
No 49752
11/9/12
STATE OF FLORIDA
PROFESSIONAL ENGINEER

Robert J. Amoruso, P.E.
FL P.E. No. 49752

PRODUCT REVISED
as complying with the Florida Building Code
Acceptance No 12-0625.12
Expiration Date 08/09/2017
By
Miami Dade Product Control

REV.	BY	DATE	CHANGE
4	RJA	6/10/12	[illegible]
3	TH	1/10/12	[illegible]

UNLESS OTHERWISE SPECIFIED DIMENSIONS ARE IN INCHES
TOLERANCES ARE:
FRACTIONS ± 1/32 DECIMALS .XX ± .01 .XXX ± .005 ANGLES ± 1/2

MATERIAL

FINISH

DO NOT SCALE DRAWING

CONTRACT NO.

APPROVALS	DATE
DRAWN	
ENGINEERING MS	11/11/02
PROJ MGMT	
PRODUCTION	

PTC PRODUCT DESIGN GROUP, LLC
PO BOX 520775
LONGWOOD, FLORIDA 32752
FBPE C.A. NO. 25935
Phone: 321.690.1783 Fax: 321.690.1789
Email: info@ptc-corp.com

Kistler McDougall

MITSUBISHI PLASTICS COMPOSITES AMERICA, INC.

ALPOLIC and ALPOLIC/fr COMPOSITE WALL PANEL SYSTEMS

SIZE B | CAGE CODE | DWG NO. MPCA0002 | REV 4

SCALE SHOWN | SHEET 2 OF 11

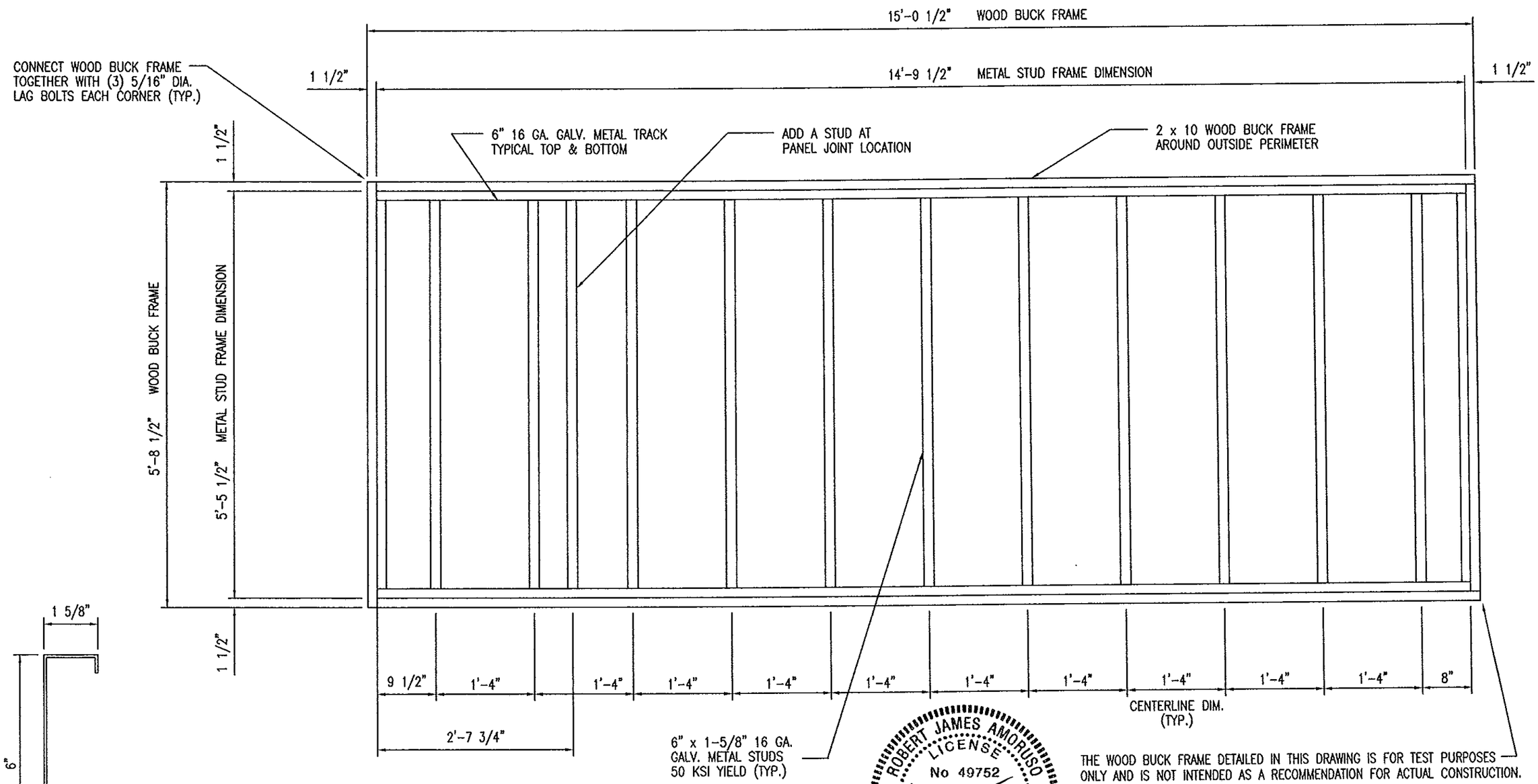

THE WOOD BUCK FRAME DETAILED IN THIS DRAWING IS FOR TEST PURPOSES ONLY AND IS NOT INTENDED AS A RECOMMENDATION FOR ACTUAL CONSTRUCTION.

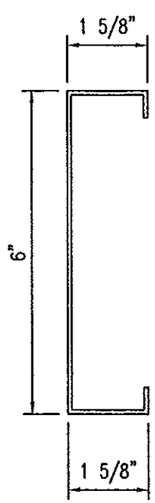

METAL STUD

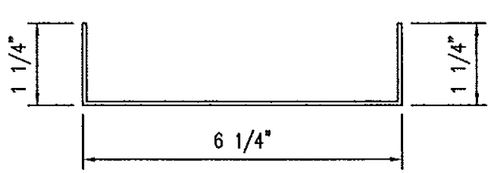

STEEL TRACK

STUD FRAMING ELEVATION

3/4" = 1'-0"

ROBERT JAMES AMORUSO LICENSE No 49752 STATE OF FLORIDA PROFESSIONAL ENGINEER 11/8/12

Robert J. Amoruso, P.E.
FL P.E. No. 49752

PRODUCT REVISED
as complying with the Florida Building Code
Acceptance No 12-0625.12
Expiration Date 08/09/2017
By
Miami Dade Product Control

REV.	BY	DATE	CHANGE
4	RJA	6/10/12	[illegible]
3	TH	1/18/12	[illegible]

UNLESS OTHERWISE SPECIFIED DIMENSIONS ARE IN INCHES
TOLERANCES ARE:
FRACTIONS ± 1/32 DECIMALS .XX ± .01 .XXX ± .005 ANGLES ± 1/2

MATERIAL

FINISH

DO NOT SCALE DRAWING

CONTRACT NO.

APPROVALS		DATE
DRAWN		
ENGINEERING	MS	11/11/02
PROJ MGMT		
PRODUCTION		

PTC PRODUCT DESIGN GROUP, LLC
PO BOX 520775
LONGWOOD, FLORIDA 32752
FBPE C.A. NO. 25935
Phone: 321.690.1788 Fax: 321.690.1789
Email: info@ptc-corp.com

Kistler McDougall

MITSUBISHI PLASTICS COMPOSITES AMERICA, INC.

ALPOLIC and ALPOLIC/fr COMPOSITE WALL PANEL SYSTEMS

SIZE	CAGE CODE	DWG NO.	REV
B		MPCA0002	4

SCALE SHOWN SHEET 3 OF 11

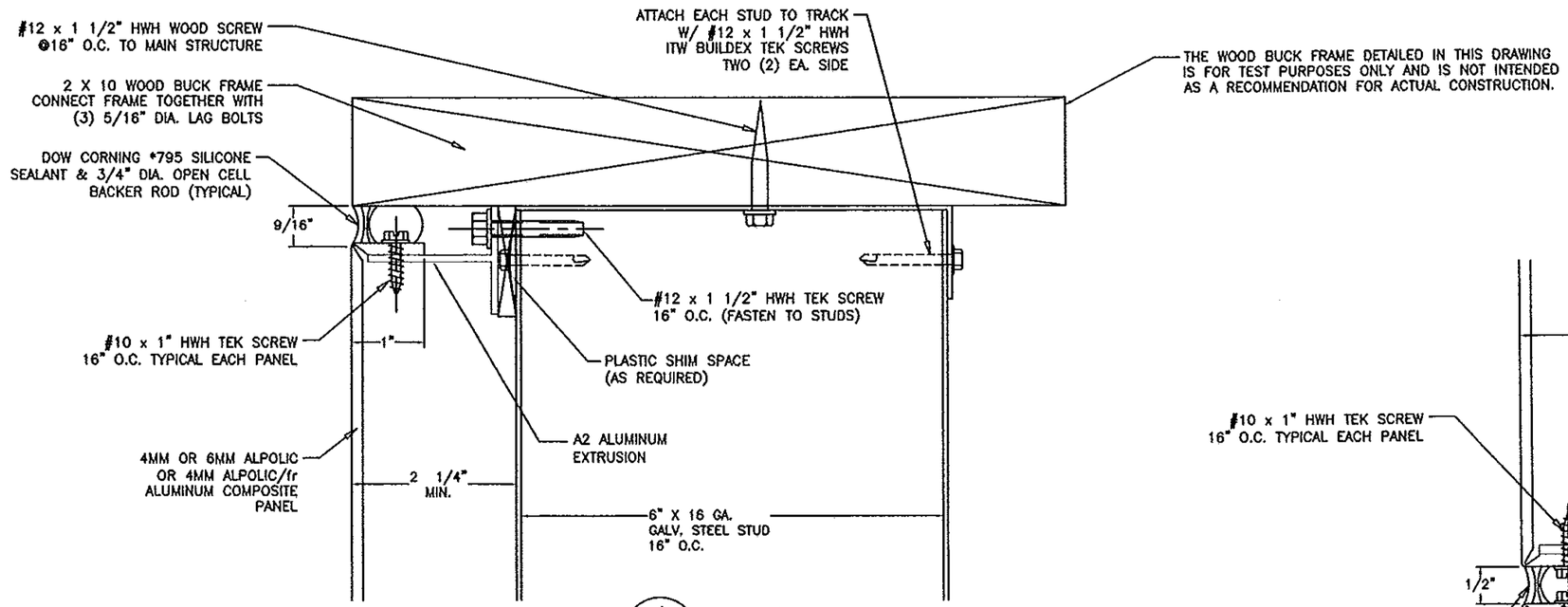

THE WOOD BUCK FRAME DETAILED IN THIS DRAWING IS FOR TEST PURPOSES ONLY AND IS NOT INTENDED AS A RECOMMENDATION FOR ACTUAL CONSTRUCTION.

1/4 DETAIL
SCALE: 6" = 1'

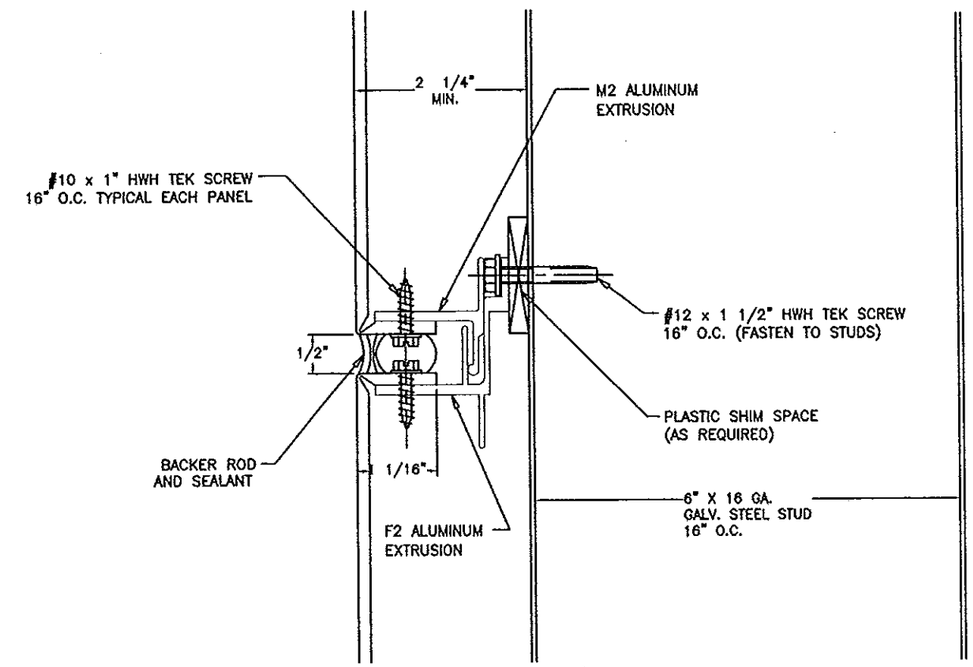

3/4 JOINT DETAIL
SCALE: 6" = 1'

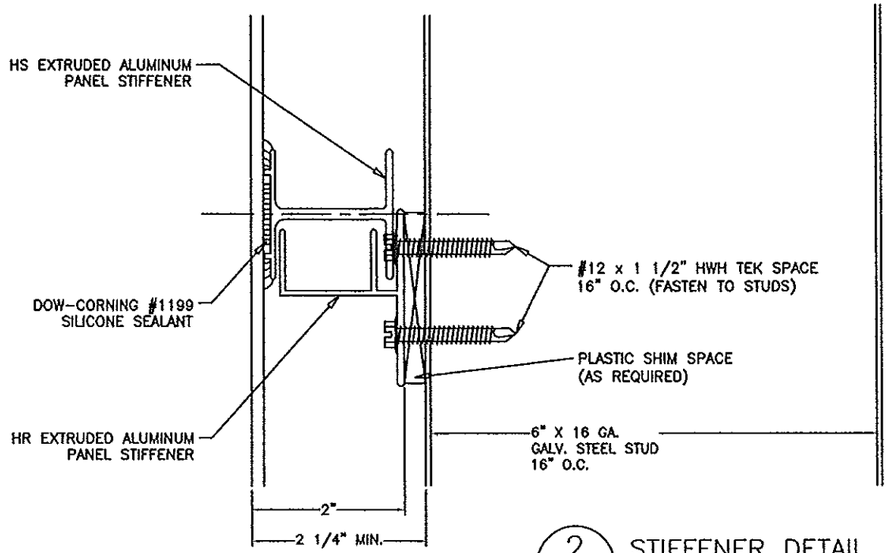

2/4 STIFFENER DETAIL
SCALE: 6" = 1'

ROBERT JAMES AMORUSO
LICENSE
No 49752
11/8/12
STATE OF FLORIDA
PROFESSIONAL ENGINEER

Robert J. Amoruso, P.E.
FL P.E. No. 49752

PRODUCT REVISED
as complying with the Florida Building Code
Acceptance No 12-0625.12
Expiration Date 08/09/2017
By
Miami Dade Product Control

REV.	BY	DATE	CHANGE
5	RJA	6/10/12	[illegible]
4	TH	1/09/12	[illegible]
3	TH	8/01/11	[illegible]
2	TH	9/04/09	[illegible]

UNLESS OTHERWISE SPECIFIED DIMENSIONS ARE IN INCHES
TOLERANCES ARE:
FRACTIONS ± 1/32 DECIMALS .XX ± .01 .XXX ± .005 ANGLES ± 1/2

MATERIAL
FINISH
DO NOT SCALE DRAWING

CONTRACT NO.

APPROVALS	DATE
DRAWN	
ENGINEERING MS	11/11/02
PROJ MGMT	
PRODUCTION	

PTC PRODUCT DESIGN GROUP, LLC
PO BOX 520776
LONGWOOD, FLORIDA 32752
FBPE C.A. NO. 25935
Phone: 321.690.1788, Fax: 321.690.1789
Email: info@ptc-corp.com

Kistler McDougall

MITSUBISHI PLASTICS COMPOSITES AMERICA, INC.

ALPOLIC and ALPOLIC/fr COMPOSITE WALL PANEL SYSTEMS

SIZE B | CAGE CODE | DWG NO. MPCA0002 | REV 5
SCALE SHOWN | SHEET 4 OF 11

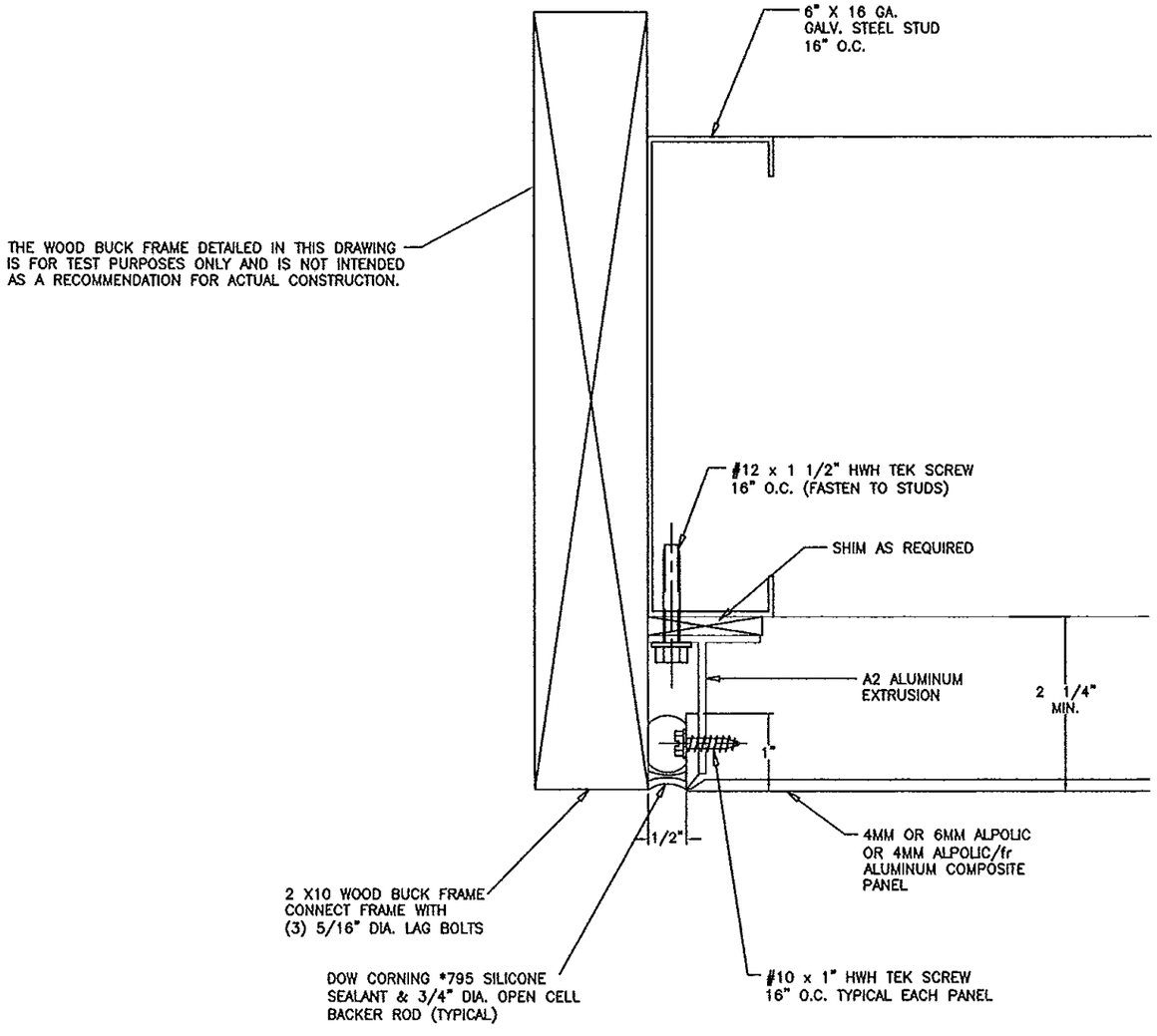

4/5 DETAIL
SCALE: 6" = 1'

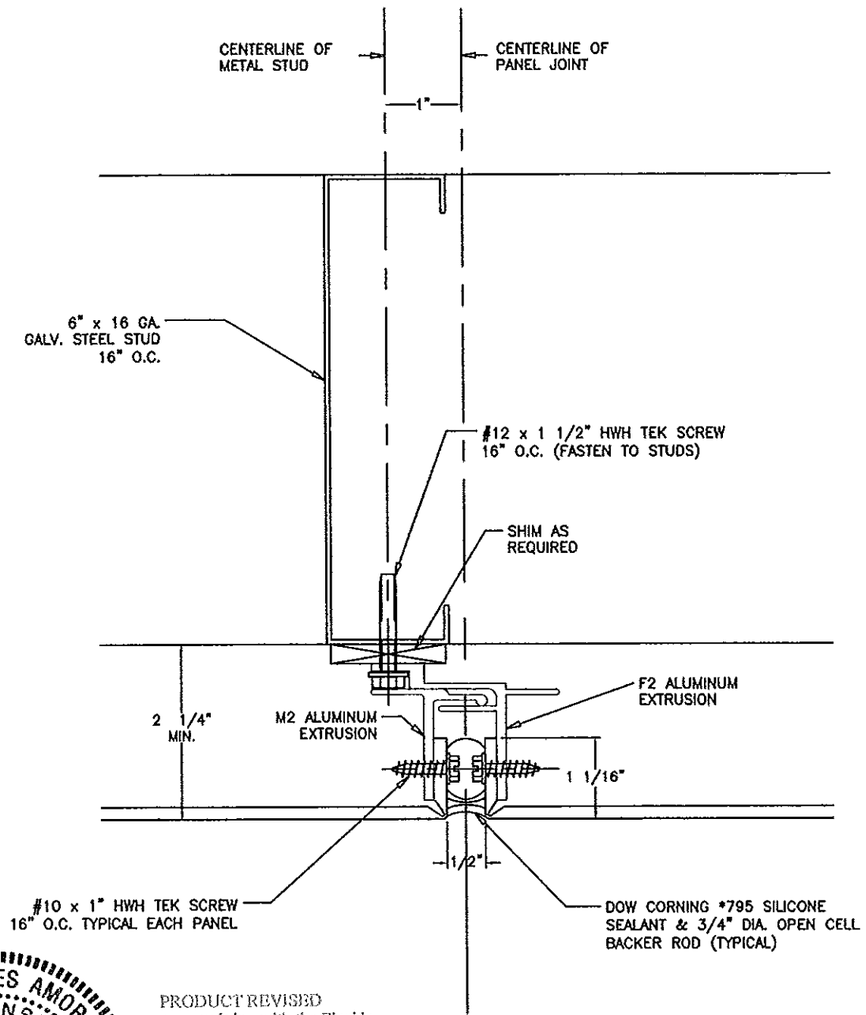

5/5 DETAIL
SCALE: 6" = 1'

ROBERT JAMES AMORUSO
LICENSE
No 49752
STATE OF
FLORIDA
PROFESSIONAL ENGINEER
11/8/12

Robert J. Amoruso, P.E.
FL P.E. No. 49752

PRODUCT REVISED
as complying with the Florida
Building Code
Acceptance No 12-0625.12
Expiration Date 08/09/2017
By
Miami Dade Product Control

PTC PRODUCT DESIGN GROUP, LLC
PO BOX 620775
LONGWOOD, FLORIDA 32752
FBPE C.A. NO. 25935
Phone: 321.690.1788, Fax: 321.690.1789
Email: info@ptc-corp.com

Kistler McDougall

REV.	BY	DATE	CHANGE
4	RJA	6/10/12	[illegible]
3	TH	1/16/12	[illegible]
2	TH	9/04/09	[illegible]

UNLESS OTHERWISE SPECIFIED DIMENSIONS ARE IN INCHES
TOLERANCES ARE:
FRACTIONS ± 1/32 DECIMALS .XX ± .01 .XXX ± .005 ANGLES ± 1/2

MATERIAL

FINISH

DO NOT SCALE DRAWING

CONTRACT NO.

APPROVALS	DATE
DRAWN	
ENGINEERING MS	11/11/02
PROJ MGMT	
PRODUCTION	

MITSUBISHI PLASTICS COMPOSITES AMERICA, INC.

ALPOLIC and ALPOLIC/fr
COMPOSITE WALL PANEL SYSTEMS

SIZE B | CAGE CODE | DWG NO. MPCA0002 | REV 4

SCALE SHOWN | SHEET 5 OF 11

HS

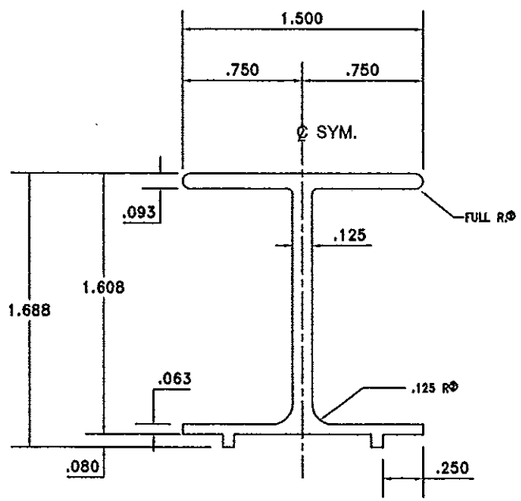

BREAK CORNERS .015 R

EXCEPT AS NOTED

ACTUAL SIZE

DIE DATA

EST. AREA: .430	DIE SIZE: 6
EST. WEIGHT: .516	NO. HOLES: 1
EST. PERI.:	EXT. LENGTH: 5 1/8" = 1 @ 35'
FACTOR:	R/R:

HR

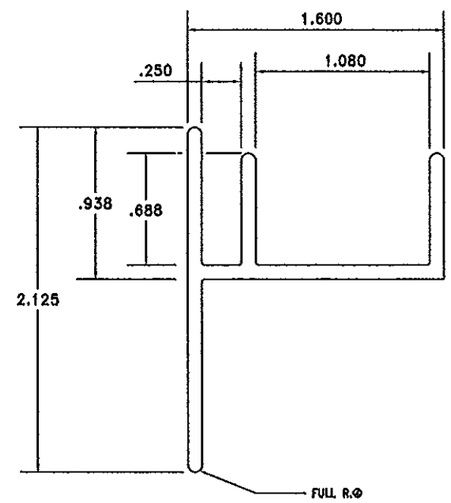

BREAK CORNERS .015 R

.090 TYPICAL METAL THICKNESS

ACTUAL SIZE

DIE DATA

EST. AREA: .465	DIE SIZE: 6
EST. WEIGHT: .558	NO. HOLES: 1
EST. PERI.:	EXT. LENGTH: 5 1/8 = 1 @ 36'
FACTOR:	R/R

A2

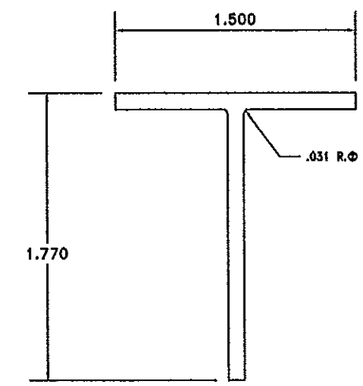

BREAK CORNERS .010 R

.100 WALL THICK TYPICAL

ACTUAL SIZE

DIE DATA

EST. AREA: .317	DIE SIZE: 6
EST. WEIGHT: .380	NO. HOLES: 1
EST. PERI.: 6.54	EXT. LENGTH:
FACTOR: 17	R/R: 5 1/8 = 1 @ 53'

ROBERT JAMES AMORUSO
LICENSE
No 49752
STATE OF
FLORIDA
PROFESSIONAL ENGINEER

Robert J. Amoruso, P.E.
FL P.E. No. 49752

PRODUCT REVISED
as complying with the Florida
Building Code
Acceptance No 12-0625.12
Expiration Date 08/09/2017
By
Miami Dade Product Control

REV.	BY	DATE	CHANGE
4	RJA	6/10/12	UPDATE TO 2009 FBC
3	TH	9/04/09	MITSUBISHI PLASTICS WAS MITSUBISHI CHEMICAL
2	TH	6/01/11	REMOVED PE SIGNATURE BLOCK
1	TH	9/04/09	ADDED PE SIGNATURE BLOCK

UNLESS OTHERWISE SPECIFIED DIMENSIONS ARE IN INCHES
TOLERANCES ARE:
FRACTIONS ± 1/32 DECIMALS .XX ± .01 .XXX ± .005 ANGLES ± 1/2

MATERIAL

FINISH

DO NOT SCALE DRAWING

CONTRACT NO.

APPROVALS	DATE
DRAWN	
ENGINEERING I/S	11/11/02
PROJ MGMT	
PRODUCTION	

PTC PRODUCT DESIGN GROUP, LLC
PO BOX 520775
LONGWOOD, FLORIDA 32752
FBPE C.A. NO. 26935
Phone: 321.690.1788 Fax: 321.690.1789
Email: info@ptc-corp.com

Kistler McDougall

MITSUBISHI PLASTICS COMPOSITES AMERICA, INC.

ALPOLIC and ALPOLIC/fr
COMPOSITE WALL PANEL SYSTEMS

SIZE	CAGE CODE	DWG NO.	REV
B		MPCA0002	4

SCALE SHOWN | SHEET 6 OF 11

M2

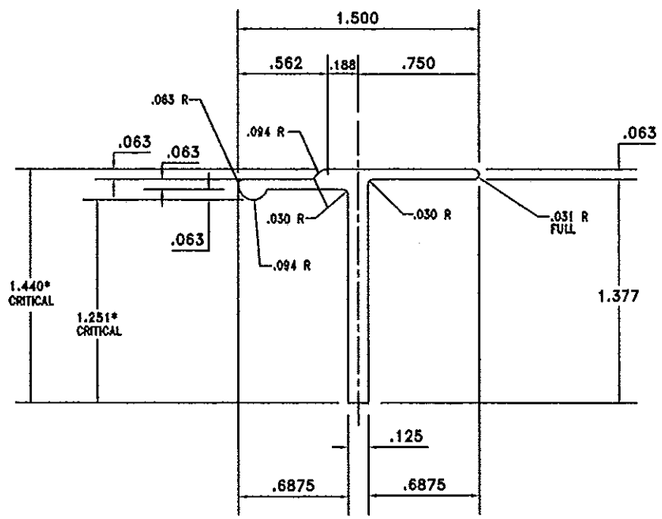

ACTUAL SIZE

BREAK SHARP CORNERS .005 R

DIE DATA

EST. AREA: .275	DIE SIZE: 6
EST. WEIGHT: .330	NO. HOLES: 1
EST. PERI.: 5.831	EXT. LENGTH: 4 1/2 = 1- 46'
FACTOR: 18	R/R: 5 1/8" = 1- 62'

F2

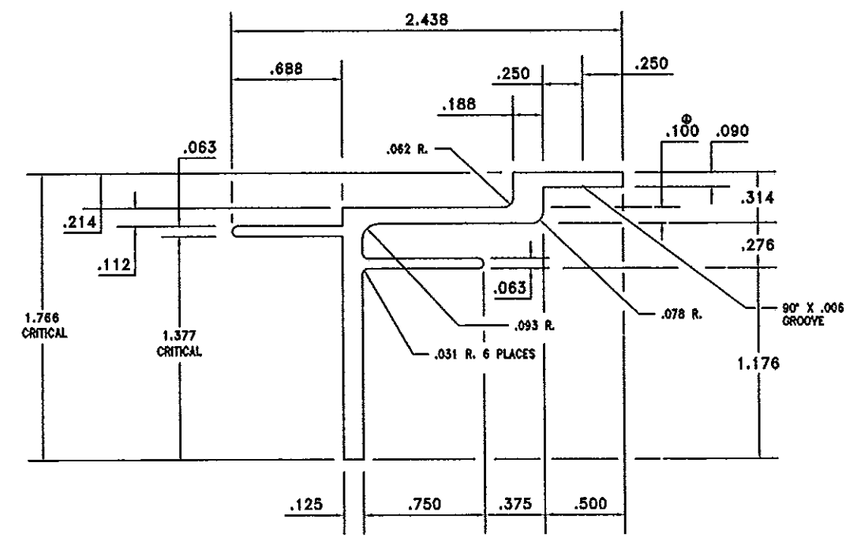

ACTUAL SIZE

BREAK SHARP CORNERS .010R

DIE DATA

EST. AREA: .484	DIE SIZE: 6
EST. WEIGHT: .581	NO. HOLES: 1
EST. PERI.: 9.900	EXT. LENGTH: 5 1/8 = 1@34'
FACTOR: 17	R/R

ROBERT JAMES AMORUSO
LICENSE
No 49752
STATE OF FLORIDA
PROFESSIONAL ENGINEER
11/8/12

Robert J. Amoruso, P.E.
FL P.E. No. 49752

PRODUCT REVISED
as complying with the Florida
Building Code
Acceptance No 12-0625.12
Expiration Date 08/09/2017
By
Miami Dade Product Control

REV.	BY	DATE	CHANGE
3	RJA	6/10/12	UPDATE TO 2006 FTC
2	TH	1/16/12	MITSUBISHI PLASTICS VAS MITSUBISHI CHEMICAL
1	TH	9/04/09	ADDED PE SIGNATURE BLOCK

UNLESS OTHERWISE SPECIFIED DIMENSIONS ARE IN INCHES TOLERANCES ARE:
FRACTIONS ± 1/32 DECIMALS .XX ± .01 .XXX ± .005 ANGLES ± 1/2

MATERIAL

FINISH

DO NOT SCALE DRAWING

CONTRACT NO.

APPROVALS	DATE
DRAWN	
ENGINEERING MS	11/11/02
PROJ MGMT	
PRODUCTION	

PTC PRODUCT DESIGN GROUP, LLC
PO BOX 520775
LONGWOOD, FLORIDA 32752
FBPE C.A. NO. 25935
Phone: 321.690.1783, Fax: 321.690.1789
Email: info@ptc-corp.com

Kistler McDougall

MITSUBISHI PLASTICS COMPOSITES AMERICA, INC.

ALPOLIC and ALPOLIC/fr COMPOSITE WALL PANEL SYSTEMS

SIZE B | CAGE CODE | DWG NO. MPCA0002 | REV 3

SCALE SHOWN | SHEET 7 OF 11

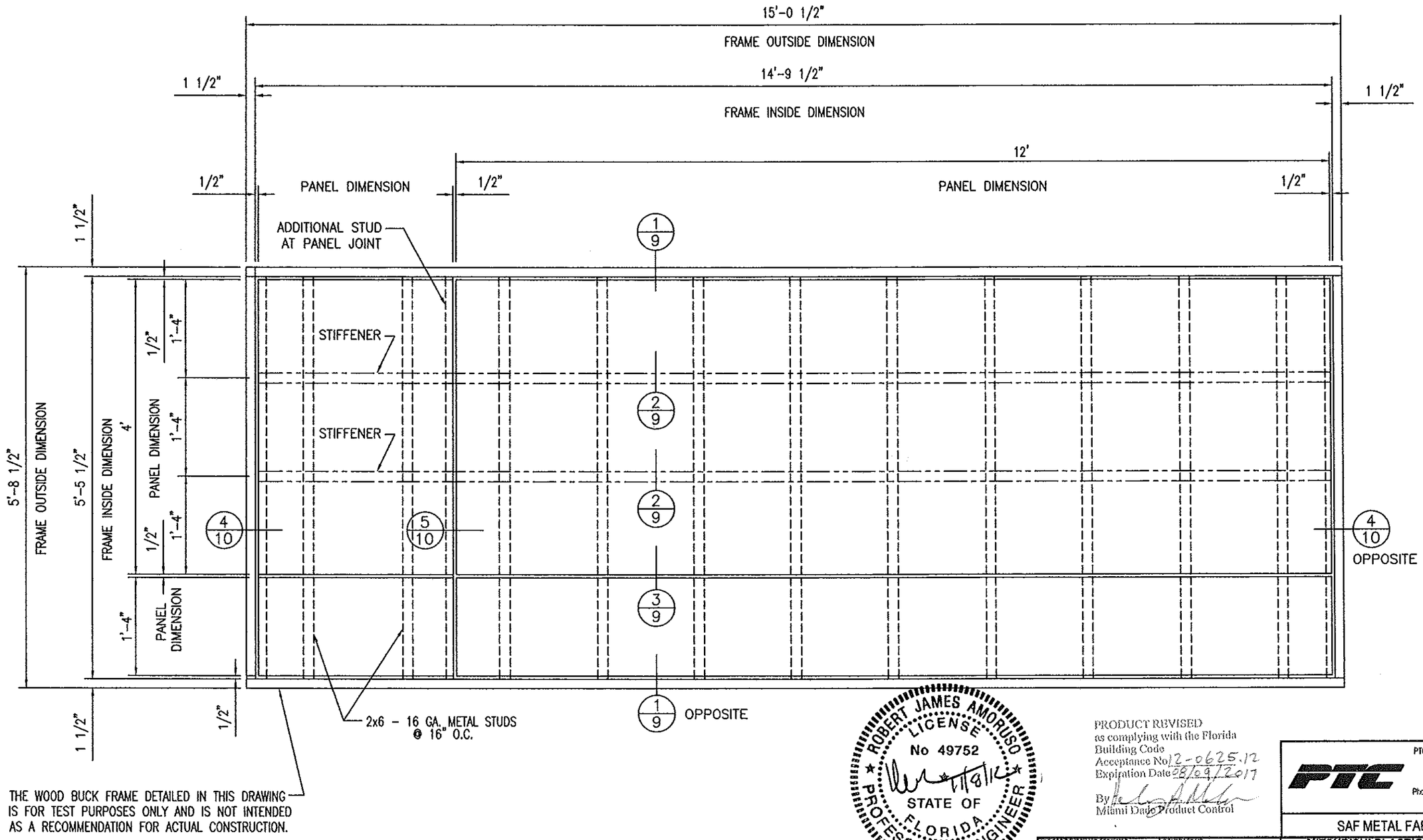

THE WOOD BUCK FRAME DETAILED IN THIS DRAWING IS FOR TEST PURPOSES ONLY AND IS NOT INTENDED AS A RECOMMENDATION FOR ACTUAL CONSTRUCTION.

PANEL ELEVATION

3/4" = 1'-0"

ROBERT JAMES AMORUSO
LICENSE
No 49752
STATE OF
FLORIDA
PROFESSIONAL ENGINEER

Robert J. Amoruso, P.E.
FL P.E. No. 49752

PRODUCT REVISED
as complying with the Florida
Building Code
Acceptance No 12-0625.12
Expiration Date 08/09/2017
By
Miami Dade Product Control

REV.	BY	DATE	CHANGE
4	RJA	6/10/12	[illegible]
3	TH	1/16/12	[illegible]
2	TH	9/04/09	[illegible]

UNLESS OTHERWISE SPECIFIED DIMENSIONS ARE IN INCHES
TOLERANCES ARE:
FRACTIONS ± 1/32 DECIMALS .XX ± .01 .XXX ± .005 ANGLES ± 1/2

MATERIAL

FINISH

DO NOT SCALE DRAWING

CONTRACT NO.

APPROVALS	DATE
DRAWN	
ENGINEERING MS	11/11/02
PROJ MGMT	
PRODUCTION	

PTC PRODUCT DESIGN GROUP, LLC
PO BOX 520775
LONGWOOD, FLORIDA 32752
FBPE C.A. NO. 25935
Phone: 321.690.1768, Fax: 321.690.1769
Email: info@ptc-corp.com

SAF METAL FABRICATION

MITSUBISHI PLASTICS COMPOSITES AMERICA, INC.

ALPOLIC and ALPOLIC/fr
COMPOSITE WALL PANEL SYSTEMS

SIZE	CAGE CODE	DWG NO.	REV
B		MPCA0002	4

SCALE SHOWN | SHEET 8 OF 11

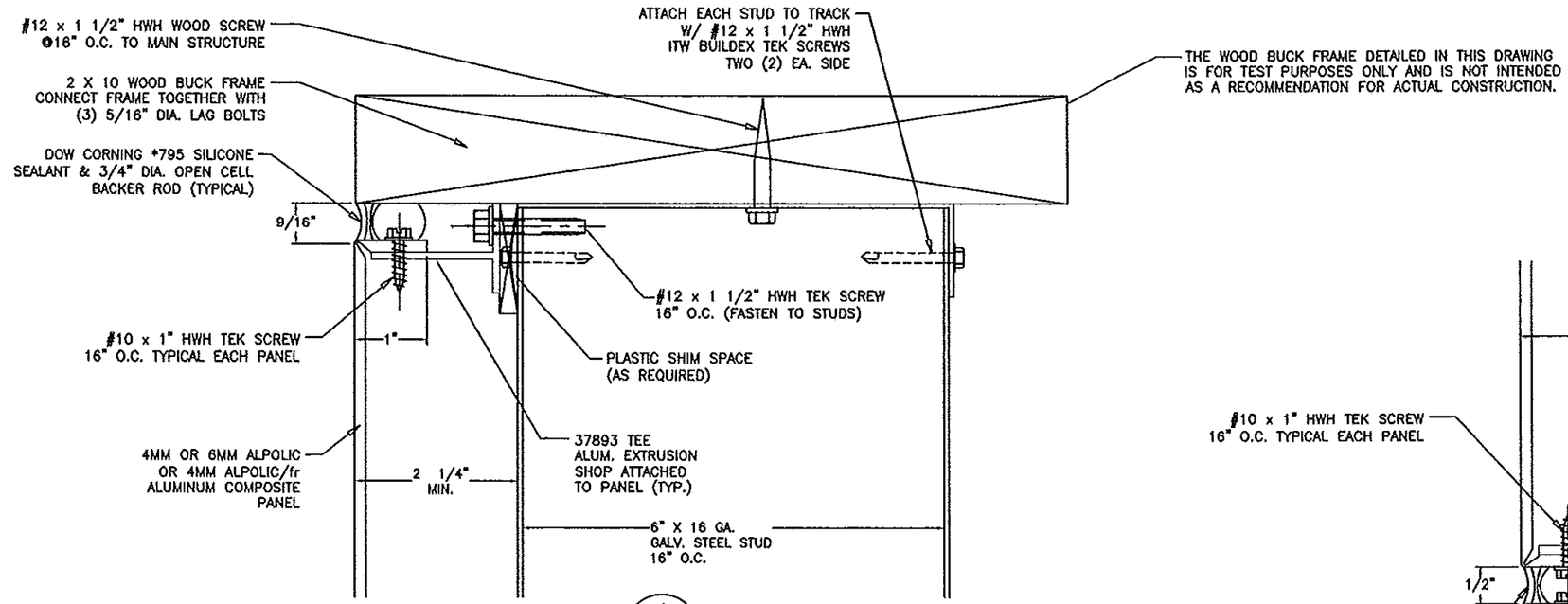

THE WOOD BUCK FRAME DETAILED IN THIS DRAWING IS FOR TEST PURPOSES ONLY AND IS NOT INTENDED AS A RECOMMENDATION FOR ACTUAL CONSTRUCTION.

1/9 DETAIL
SCALE: 6" = 1'

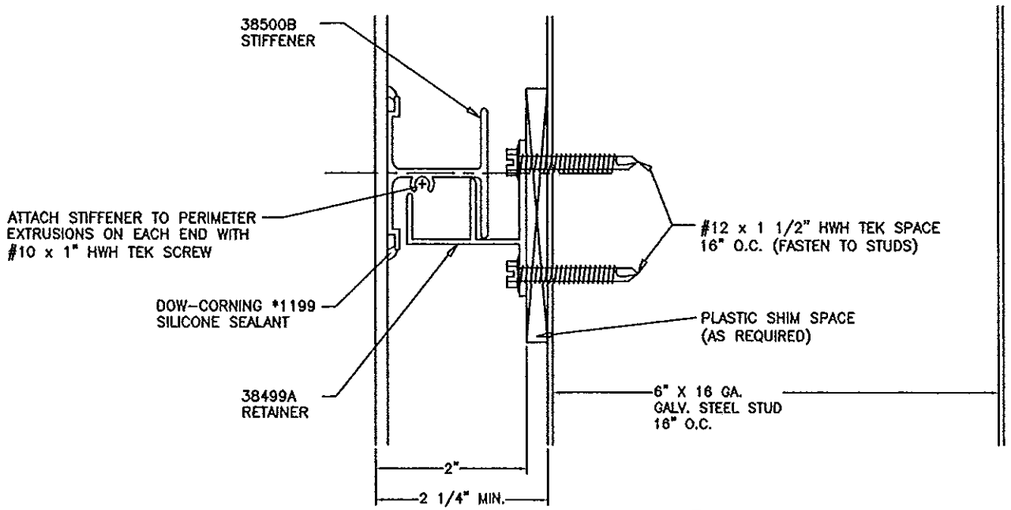

2/9 STIFFENER DETAIL
SCALE: 6" = 1'

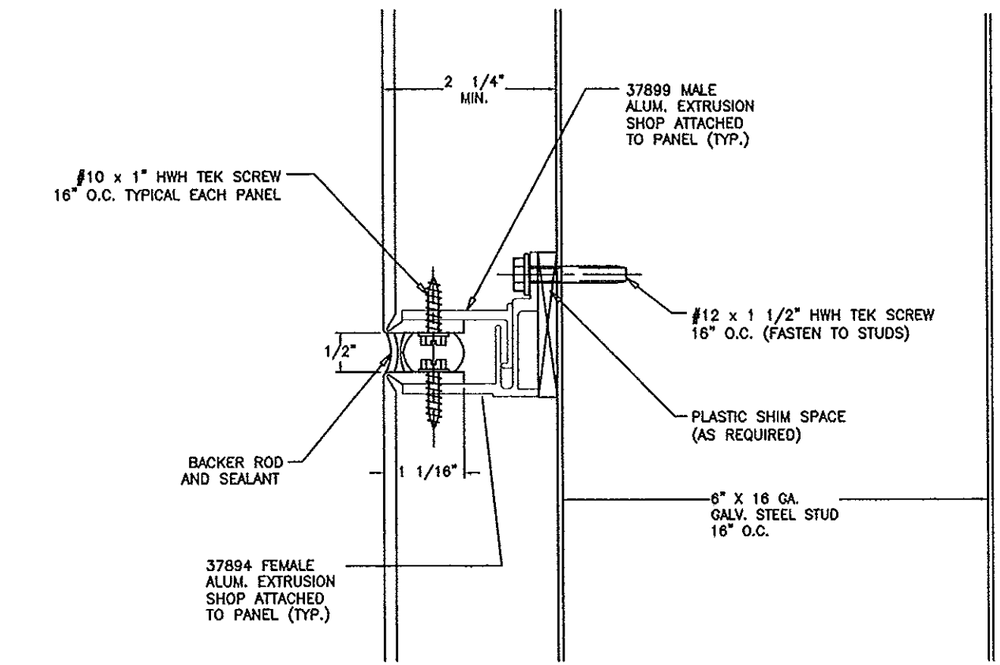

3/9 JOINT DETAIL
SCALE: 6" = 1'

ROBERT JAMES AMORUSO
LICENSE
No 49752
11/8/12
STATE OF FLORIDA
PROFESSIONAL ENGINEER

PRODUCT REVISED
as complying with the Florida
Building Code
Acceptance No 12-0625.12
Expiration Date 08/09/2017
By
Miami Dade Product Control

Robert J. Amoruso, P.E.
FL P.E. No. 49752

REV.	BY	DATE	CHANGE
4	RJA	8/10/12	UPDATE TO 2014 FBC
3	TH	1/18/12	[illegible]
2	TH	9/04/09	[illegible]

UNLESS OTHERWISE SPECIFIED DIMENSIONS ARE IN INCHES
TOLERANCES ARE:
FRACTIONS ± 1/32 DECIMALS .XX ± .01 .XXX ± .005 ANGLES ± 1/2

MATERIAL
FINISH
DO NOT SCALE DRAWING

CONTRACT NO.

APPROVALS	DATE
DRAWN	
ENGINEERING MS	11/11/02
PROJ MGMT	
PRODUCTION	

PTC PRODUCT DESIGN GROUP, LLC
PO BOX 520775
LONGWOOD, FLORIDA 32752
FBPE C.A. NO. 25935
Phone: 321.690.1768, Fax: 321.690.1769
Email: info@ptc-corp.com

SAF METAL FABRICATION

MITSUBISHI PLASTICS COMPOSITES AMERICA, INC.

ALPOLIC and ALPOLIC/fr COMPOSITE WALL PANEL SYSTEMS

SIZE B | CAGE CODE | DWG NO. MPCA0002 | REV 4
SCALE SHOWN | SHEET 9 OF 11

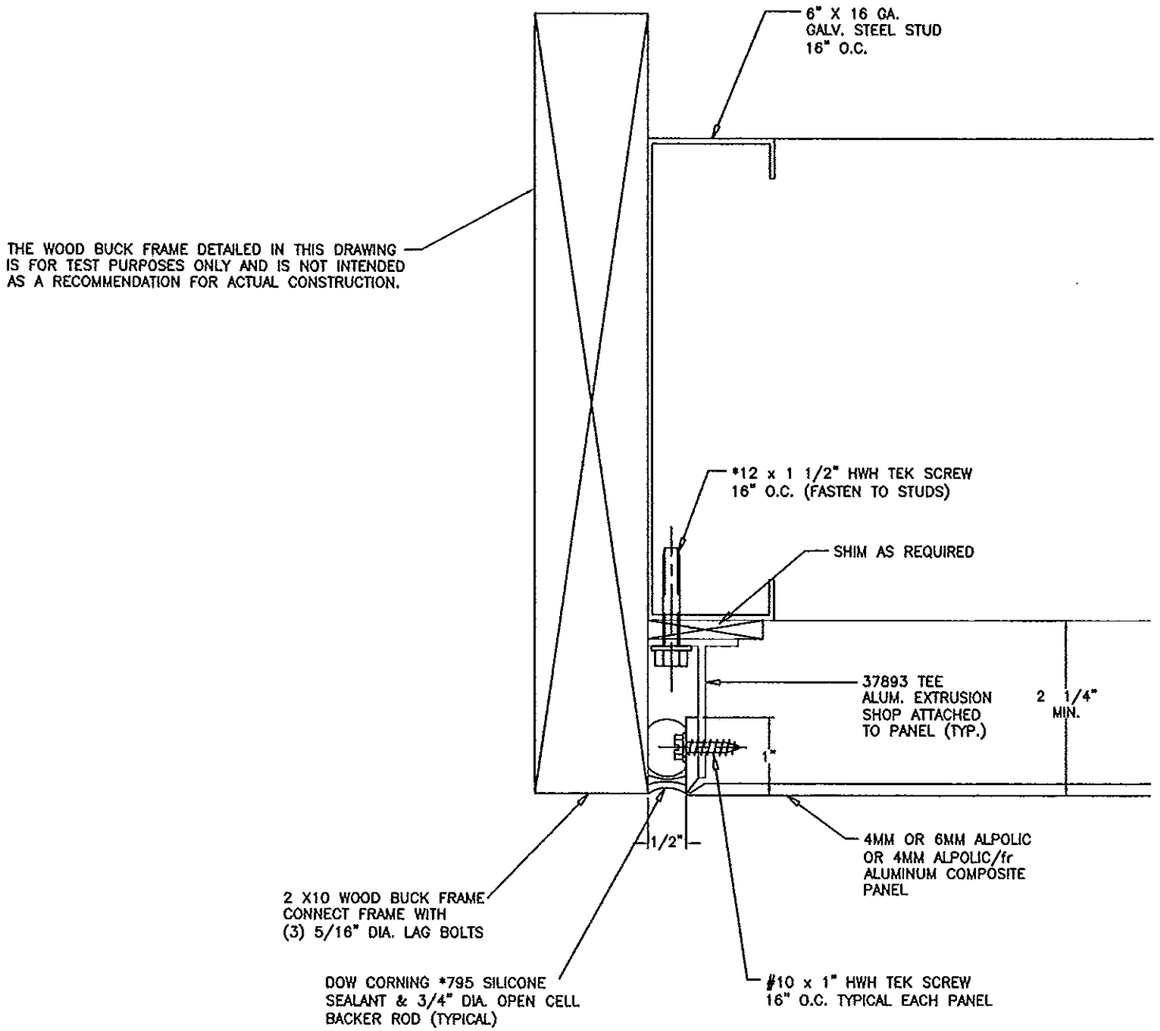

4 / 10 DETAIL
SCALE: 6" = 1'

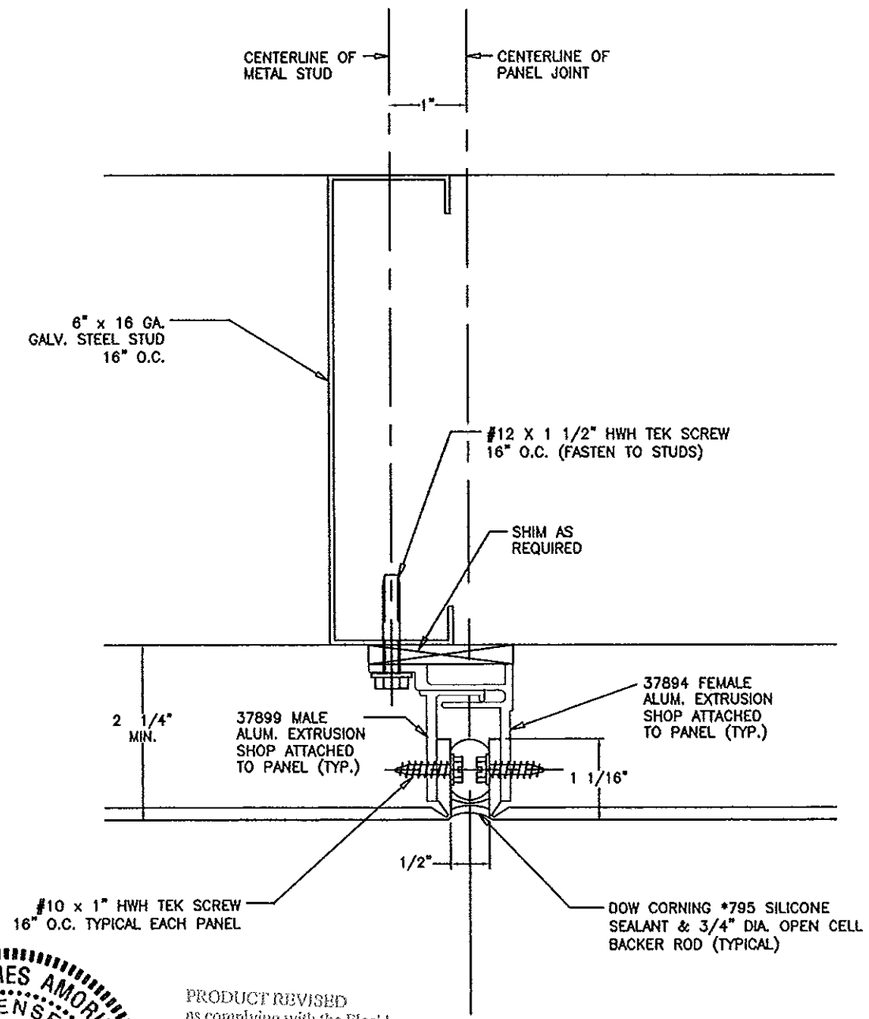

5 / 10 DETAIL
SCALE: 6" = 1'

ROBERT JAMES AMORUSO
LICENSE
No 49752
STATE OF
FLORIDA
PROFESSIONAL ENGINEER

Robert J. Amoruso, P.E.
FL P.E. No. 49752

PRODUCT REVISED
as complying with the Florida
Building Code
Acceptance No 12-0625.12
Expiration Date 08/09/2017
By
Miami Dade Product Control

REV.	BY	DATE	CHANGE
4	R.JA	6/10/12	UPDATE TO 2010 FBC
3	TH	1/18/12	REVISED PLACING THE SHIM-BOX DETAIL
2	TH	9/04/09	ADDED 2X BOARDS BLOCK

UNLESS OTHERWISE SPECIFIED DIMENSIONS ARE IN INCHES
TOLERANCES ARE:
FRACTIONS ± 1/32 DECIMALS .XX ± .01 .XXX ± .005 ANGLES ± 1/2

MATERIAL

FINISH

DO NOT SCALE DRAWING

CONTRACT NO.

APPROVALS	DATE
DRAWN	
ENGINEERING MS	11/11/02
PROJ MGMT	
PRODUCTION	

PTC PRODUCT DESIGN GROUP, LLC
PO BOX 520775
LONGWOOD, FLORIDA 32752
FBPE C.A. NO. 25935
Phone: 321.690.1788, Fax: 321.690.1789
Email: info@ptc-corp.com

SAF METAL FABRICATION

MITSUBISHI PLASTICS COMPOSITES AMERICA, INC.

ALPOLIC and ALPOLIC/fr
COMPOSITE WALL PANEL SYSTEMS

SIZE B | CAGE CODE | DWG NO. MPCA0002 | REV 4
SCALE SHOWN | SHEET 10 OF 11

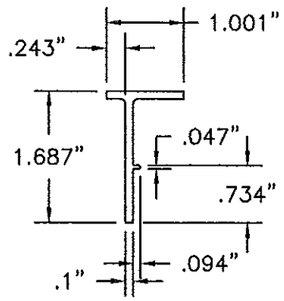

ACM TERMINATOR

EXTRUDED ALUMINUM 6063-T6

Die Data: #SAF-37893
Area = .265
Wt./Ft. = .318
Perim. = 5.483
Circle Size = 0-3

Ix = .078, Iy = .011
Sx = .070, Sy = .018
Cgy = 1.116, Cgx = .628

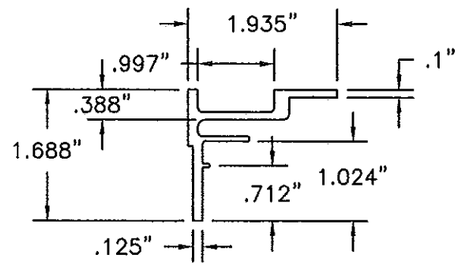

ACM FEMALE

EXTRUDED ALUMINUM 6063-T6

Die Data: #SAF-37894
Area = .499
Wt./Ft. = .599
Perim. = 9.154
Circle Size = 0-3

Ix = .100, Iy = .161
Sx = .086, Sy = .120
Cgy = 1.160, Cgx = 1.348

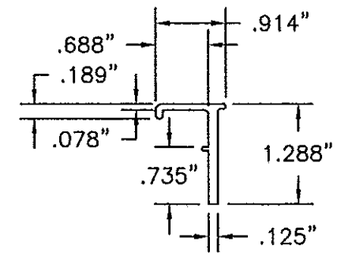

ACM MALE

EXTRUDED ALUMINUM 6063-T6

Die Data: #SAF-37899
Area = .234
Wt./Ft. = .281
Perim. = 4.646
Circle Size = 0-3

Ix = .039, Iy = .012
Sx = .048, Sy = .019
Cgy = .819, Cgx = .633

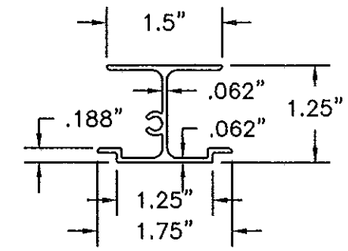

PANEL STIFFENER

EXTRUDED ALUMINUM 6063-T6

Die Data: #SAF-38500B
Area = .325
Wt./Ft. = .390
Perim. = 9.749
Circle Size = 0-3

Ix = .081, Iy = .049
Sx = .120, Sy = .056
Cgy = .676, Cgx = .886

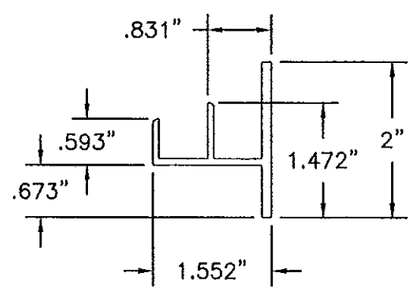

RETAINER

EXTRUDED ALUMINUM 6063-T6

Die Data: #SAF-38499A
Area = .4610
Wt./Ft. = .542
Perim. = 9.4387
Circle Size = 0-3

Ix = .095, Iy = .1262
Sx = .09, Sy = .117

ROBERT JAMES AMORUSO
LICENSE
No 49752
STATE OF
FLORIDA
PROFESSIONAL ENGINEER

Robert J. Amoruso, P.E.
FL P.E. No. 49752

PRODUCT REVISED
as complying with the Florida
Building Code
Acceptance No 12-0625.12
Expiration Date 08/09/2017
By
Miami Dade Product Control

REV.	BY	DATE	CHANGE
1	RJA	6/10/12	[illegible]

UNLESS OTHERWISE SPECIFIED DIMENSIONS ARE IN INCHES
TOLERANCES ARE:
FRACTIONS ± 1/32 DECIMALS .XX ± .01 .XXX ± .005 ANGLES ± 1/2

MATERIAL 4MM & 6MM ALPOLIC & 4MM ALPOLIC/fr
FINISH
DO NOT SCALE DRAWING

CONTRACT NO.

APPROVALS	DATE
DRAWN	
ENGINEERING MS	11/11/02
PROJ MGMT	
PRODUCTION	

PTC PRODUCT DESIGN GROUP, LLC
PO BOX 520775
LONGWOOD, FLORIDA 32752
FBPE C.A. NO. 25935
Phone: 321.690.1788 Fax: 321.690.1789
Email: info@ptc-corp.com

SAF METAL FABRICATION

MITSUBISHI PLASTICS COMPOSITES AMERICA, INC.

ALPOLIC and ALPOLIC/fr
COMPOSITE WALL PANEL SYSTEMS

SIZE B | CAGE CODE | DWG NO. MPCA0002 | REV 1

SCALE SHOWN | SHEET 11 OF 11