MIAMI-DADE COUNTY
PRODUCT CONTROL SECTION
11805 SW 26 Street, Room 208
Miami, Florida 33175-2474
T (786) 315-2590 F (786) 315-2599
www.miamidade.gov/economy

DEPARTMENT OF REGULATORY AND ECONOMIC RESOURCES (RER)
BOARD AND CODE ADMINISTRATION DIVISION

NOTICE OF ACCEPTANCE (NOA)

WinDoor, Incorporated
7500 Amsterdam drive
Orlando, Florida, 32832

SCOPE:

This NOA is being issued under the applicable rules and regulations governing the use of construction materials. The documentation submitted has been reviewed and accepted by Miami-Dade County RER -Product Control Section to be used in Miami Dade County and other areas where allowed by the Authority Having Jurisdiction (AHJ).

This NOA shall not be valid after the expiration date stated below. The Miami-Dade County Product Control Section (In Miami Dade County) and/or the AHJ (in areas other than Miami Dade County) reserve the right to have this product or material tested for quality assurance purposes. If this product or material fails to perform in the accepted manner, the manufacturer will incur the expense of such testing and the AHJ may immediately revoke, modify, or suspend the use of such product or material within their jurisdiction. RER reserves the right to revoke this acceptance, if it is determined by Miami-Dade County Product Control Section that this product or material fails to meet the requirements of the applicable building code.

This product is approved as described herein, and has been designed to comply with the Florida Building Code, including the High Velocity Hurricane Zone.

DESCRIPTION: Series "9050" Single Aluminum Inswing Terrace Door-LMI

APPROVAL DOCUMENT: Drawing No. **08-01175** Rev **D,** titled "Series 9050 Thermally Broken Aluminum Inswing Terrace Door", sheets 1 through 15 of 15, prepared by manufacturer, dated 11/09/10 and last revised on 03/18/13, signed and sealed by Luis R. Lomas, P.E., bearing the Miami-Dade County Product Control Revision stamp with the Notice of Acceptance number and expiration date by the Miami-Dade County Product Control Section.

MISSILE IMPACT RATING: Large and Small Missile Impact Resistant

Limitations:

1. See Design Pressures tables Vs sill types in sheets 1 and 2. Max. Positive Design pressure above **+80** PSF requires canopy or overhang complying w/FBC requirements.
2. See multi-locking points Vs. Door sizes in sheets 10 & 11 for Giesse and for HLS 9000 Hoppe in sheet 12. The Hoppe hardware shoot bolts at head & sill must engage min 1" beyond the door frame into specified substrate.
3. Standard Door sill to be set with 3/16" continuous full width construction sealant, compatible to the substrate with min 18 #/in (PLI) durable shear strength. The ADA sill to be secured with min three screws & optional construction sealant.

LABELING: Each unit shall bear a permanent label with the manufacturer's name or logo, city, state and series and following statement: "Miami-Dade County Product Control Approved", as noted herein.

RENEWAL of this NOA shall be considered after a renewal application has been filed and there has been no change in the applicable building code negatively affecting the performance of this product.

TERMINATION of this NOA will occur after the expiration date or if there has been a revision or change in the materials, use, and/or manufacture of the product or process. Misuse of this NOA as an endorsement of any product, for sales, advertising or any other purposes shall automatically terminate this NOA. Failure to comply with any section of this NOA shall be cause for termination and removal of NOA.

ADVERTISEMENT: The NOA number preceded by the words Miami-Dade County, Florida, and followed by the expiration date may be displayed in advertising literature. If any portion of the NOA is displayed, then it shall be done in its entirety.

INSPECTION: A copy of this entire NOA shall be provided to the user by the manufacturer or its distributors and shall be available for inspection at the job site at the request of the Building Official.

This NOA **revises NOA # 12-0130.11 (11-0124.05)** and consists of this page 1 and evidence pages E-1, as well as approval document mentioned above.

The submitted documentation was reviewed by **Ishaq I. Chanda, P.E.**

MIAMI-DADE COUNTY APPROVED

6/7/13

NOA No. 12-0628.03
Expiration Date: August 25, 2016
Approval Date: June 13, 2013

NOTICE OF ACCEPTANCE: EVIDENCE SUBMITTED

A. DRAWINGS

1. Manufacturer's die drawings and sections (submitted under file # **12-0130.11**)
2. Drawing No. **08-01175** Rev **D,** titled "Series 9050 Thermally Broken Aluminum Inswing Terrace Door", sheets 1 through 15 of 15, prepared by manufacturer, dated 11/09/10 and last revised on 03/18/13, signed and sealed by Luis R. Lomas, P.E.

Note: This revision consists of additions of Hoppe Hardware and monolithic laminated glass.

B. TESTS

1. Test reports on: 1) Air Infiltration Test, per FBC, TAS 202-94
   2) Uniform Static Air Pressure Test, Loading per FBC TAS 202-94
   3) Water Resistance Test, per FBC, TAS 202-94
   4) Large Missile Impact Test per FBC, TAS 201-94
   5) Cyclic Wind Pressure Loading per FBC, TAS 203-94
   6) Forced Entry Test, per FBC 2411 3.2.1, TAS 202-94

   Along with marked-up drawings and installation diagram of Aluminum outswing/Inswing Doors, prepared by National Certified Testing Laboratories Inc, Test Report No. **NCTL-210-3653-1** dated 10/15/10 and **revised** on 08/13/12 and 02/28/13, signed & sealed by Gerald J, Ferrara, P.E. (Note: This test reports have addendum letters dated 03/04/13, issued by National Certified Testing Laboratories Inc., signed & sealed by Gerald J, Ferrara, P.E.)
2. Test reports on: 1) Air Infiltration Test, per FBC, TAS 202-94
   2) Uniform Static Air Pressure Test, Loading per FBC TAS 202-94
   3) Water Resistance Test, per FBC, TAS 202-94
   4) Large Missile Impact Test per FBC, TAS 201-94
   5) Cyclic Wind Pressure Loading per FBC, TAS 203-94
   6) Forced Entry Test, per FBC 2411 3.2.1, TAS 202-94

   Along with marked-up drawings and installation diagram of Aluminum outswing/Inswing Doors, prepared by National Certified Testing Laboratories Inc, Test Report No. **NCTL-210-3653-1** dated 10/15/10, signed & sealed by Gerald J, Ferrara, P.E.
   (Note: This test reports have addendum letters dated 03/28/11, issued by National Certified Testing Laboratories Inc., signed & sealed by Gerald J, Ferrara, P.E.
   (Test report submitted under files # **12-0130.11 /# 11-0124.05).**

C. CALCULATIONS

1. Anchor verification calculations, structural & comparative analysis, complying with FBC-2007, dated 05/18/2011 and last revised on 06/21/2011, prepared, signed and sealed by Luis R. Lomas, P.E. (Submitted under files # **12-0130.11 /# 11-0124.05**).
2. Glazing complies with ASTME-1300-02 &-04.

D. QUALITY ASSURANCE

1. Miami Dade Department of Regulatory and Economic Resources (RER).

Ishaq I. Chanda

Ishaq I. Chanda, P.E.
Product Control Examiner
NOA No. 12-0628.03
Expiration Date: August 15, 2016
Approval Date: June 13, 2013

NOTICE OF ACCEPTANCE: EVIDENCE SUBMITTED

E. MATERIAL CERTIFICATIONS (Submitted under files # **12-0130.11//# 11-0124.05**)

1. Notice of Acceptance No. **11-0624.02** issued to E.I. DuPont DeNemours & Co., Inc. for their "**DuPont Sentry Glass ®**", expiring on 01/14/17.
2. Test report No. **ETC-07-1043-19094-0** per **ASTMG-26-95** (4500 Xenon Arc) & ASTMD-638 dated 02/18/08, issued by ETC Laboratories, issued to Technoform for Polymide plastic strut.
3. Test report No. **ATI-61261.01-106-18** per **ASTMD-2843-99** (Smoke density) & ASTMD-635(Rate of burning) dated 12/14/05, issued by Architect Testing, issued to Technoform for Polymide plastic strut.

F. STATEMENTS

1. Statement letter of conformance to FBC 2010 and "No financial interest", dated 12/19/12, prepared, signed and sealed by Luis R. Lomas, P.E.
2. Statement letters of conformance to FBC 2007 and "No financial interest", dated Nov 09, 2010, signed and sealed by Luis R. Lomas, P.E. (Submitted under file # **11-0124.04**)
3. Test lab compliance statement, part of the above referenced reports.
4. Statement addendum letters dated 03/28/11, issued by National Certified Testing Laboratories Inc., signed & sealed by Gerald J, Ferrara, P.E.

G. OTHER

1. This NOA **revises** NOA # **12-0130.11**, expiring on August 25, 2016.
2. Previous NOA(s) associated with this file is **#11-0124.05**
3. Test Proposals **#12-0368** dated March 14, 2012 approved by PERA and # **09-1509** approved by BCCO.

Ishaq I. Chanda

Ishaq I. Chanda, P.E.
Product Control Examiner
NOA No. 12-0628.03
Expiration Date: August 15, 2016
Approval Date: June 13, 2013

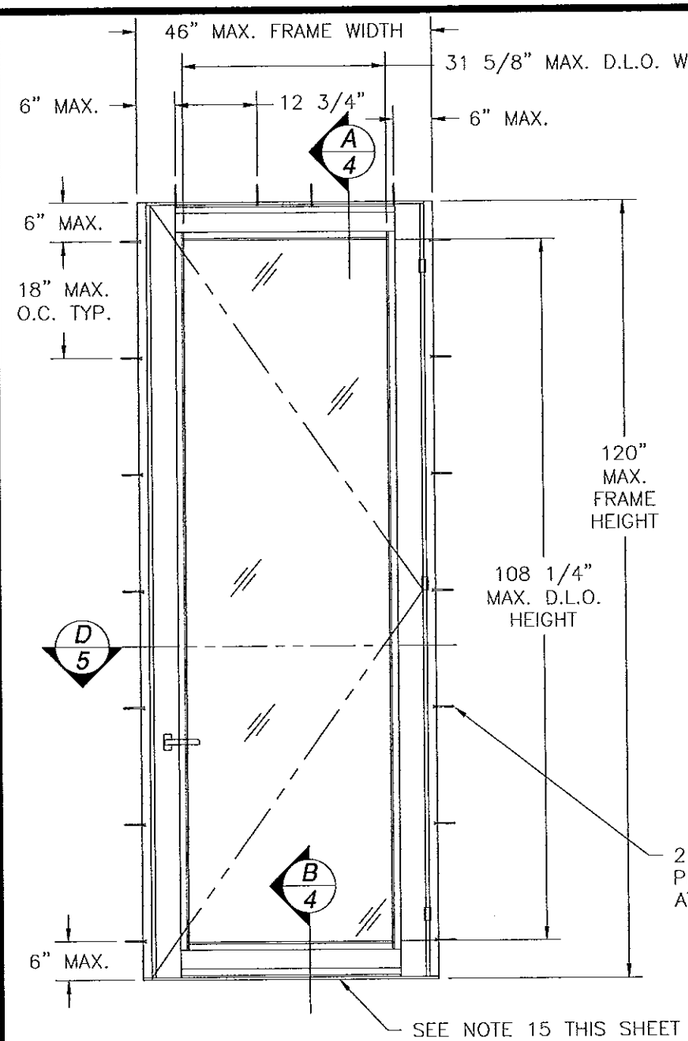

SERIES 9050 THERMALLY BROKEN ALUMINUM INSWING TERRACE DOOR WITH STANDARD SILL

STANDARD BOTTOM RAIL SHOWN, TALL BOTTOM RAIL IS OPTIONAL

EXTERIOR VIEW

TABLE #1

Maximum design pressure capacity chart (psf)

Series 9050 Terrace IS Door with Standard Sill

Frame Height (in)	Frame Panel width (in)							
	28.0		34.0		40.0		46.0	
	Pos	Neg	Pos	Neg	Pos	Neg	Pos	Neg
80.0	100.0	150.0	100.0	150.0	100.0	138.0	100.0	120.0
84.0	100.0	150.0	100.0	150.0	100.0	138.0	100.0	120.0
96.0	100.0	150.0	100.0	150.0	100.0	138.0	100.0	120.0
108.0	100.0	150.0	100.0	150.0	100.0	136.9	100.0	120.0
120.0	100.0	150.0	100.0	150.0	100.0	133.9	100.0	120.0

MAXIMUM PANEL WIDTH
FOR EGRESS APPLICATION PER FBC
TO BE REVIEWED
BY AUTHORITY HAVING JURISDICTION.

TABLE #1

Number of anchors locations required.

Frame Height (in)	Frame Panel width (in)							
	28.0		34.0		40.0		46.0	
	Head	Jamb	Head	Jamb	Head	Jamb	Head	Jamb
80.0	3	5	3	5	4	5	4	5
84.0	3	5	3	5	4	5	4	5
96.0	3	6	3	6	4	6	4	6
108.0	3	7	3	7	4	7	4	7
120.0	3	7	3	7	4	7	4	7

JAMBS USE (2) ANCHORS PER LOCATON.

PANEL SIZE FORMULA:
PANEL HEIGHT = FRAME HEIGHT – 1.5"
PANEL WIDTH = FRAME WIDTH – 4.0"

D.L.O. FORMULA WITH STANDARD BOTTOM RAIL:
D.L.O. HEIGHT = FRAME HEIGHT – 11.75"
D.L.O. WIDTH = FRAME WIDTH – 14.375"

REVISIONS			
REV	DESCRIPTION	DATE	APPROVED
A	REVISED PER MD COMMENTS	06/13/2011	R.L.
B	ADDED GLAZING C & HOPPE HARDWARE	12/16/12	R.L.
C	REVISED PER MD COMMENTS	03/18/13	R.L.

NOTES:

1) THE PRODUCT SHOWN HEREIN IS DESIGNED AND MANUFACTURED TO COMPLY WITH REQUIREMENTS OF THE FLORIDA BUILDING CODE INCLUDING THE HVHZ.
2) WOOD FRAMING AND MASONRY OPENING TO BE DESIGNED AND ANCHORED TO PROPERLY TRANSFER ALL LOADS TO STRUCTURE. FRAMING AND MASONRY OPENING IS THE RESPONSIBILITY OF THE ARCHITECT OR ENGINEER OF RECORD.
3) 1X BUCK OVER MASONRY/CONCRETE IS OPTIONAL. WHERE 1X BUCK IS NOT USED DISSIMILAR MATERIALS MUST BE SEPARATED WITH APPROVED COATING OR MEMBRANE. SELECTION OF COATING OR MEMBRANE IS THE RESPONSIBILITY OF THE ARCHITECT OR ENGINEER OF RECORD.
4) ALLOWABLE STRESS INCREASE OF 1/3 WAS NOT USED IN THE DESIGN OF THE PRODUCT SHOWN HEREIN. WIND LOAD DURATION FACTOR Cd=1.6 WAS USED FOR WOOD ANCHOR CALCULATIONS.
5) FRAME AND PANEL MATERIAL: EXTRUDED THERMALLY BROKEN ALUMINUM 6063–T6.
6) UNITS MUST BE GLAZED PER ASTM E1300. SEE SHEET 3 FOR GLAZING OPTIONS.
7) APPROVED IMPACT PROTECTIVE SYSTEM IS NOT REQUIRED FOR THIS PRODUCT IN WIND BORNE DEBRIS REGIONS.
8) SHIM AS REQUIRED AT EACH INSTALLATION ANCHOR WITH LOAD BEARING SHIM. SHIM WHERE SPACE OF 1/16" OR GREATER OCCURS. MAXIMUM ALLOWABLE SHIM STACK UP TO 1/4".
9) FOR ANCHORING INTO CONCRETE/MASONRY USE 1/4" ITW TAPCONS WITH SUFFICIENT LENGTH TO ACHIEVE A 1 1/4" MINIMUM EMBEDMENT INTO SUBSTRATE WITH 2 1/2" MINIMUM EDGE DISTANCE. LOCATE ANCHORS AS SHOWN IN ELEVATIONS AND INSTALLATION DETAILS, IN THIS DRAWING SET.
10) FOR ANCHORING INTO WOOD FRAMING, 2X BUCK OR 2X BACKED 20GA. STEEL FRAMING USE #14 WOOD SCREW WITH SUFFICIENT LENGTH TO ACHIEVE A 1 3/4" MINIMUM EMBEDMENT INTO SUBSTRATE WITH 1" MINIMUM EDGE DISTANCE. LOCATE ANCHORS AS SHOWN IN ELEVATIONS AND INSTALLATION DETAILS, IN THIS DRAWING SET.
11) ALL FASTENERS TO BE CORROSION RESISTANT.
12) INSTALLATION ANCHORS SHALL BE INSTALLED IN ACCORDANCE WITH ANCHOR MANUFACTURER'S INSTALLATION INSTRUCTIONS, AND ANCHORS SHALL NOT BE USED IN SUBSTRATES WITH STRENGTHS LESS THAN THE MINIMUM STRENGTH SPECIFIED BELOW:
    A. WOOD – MINIMUM SPECIFIC GRAVITY OF G=0.42
    B. CONCRETE – MINIMUM COMPRESSIVE STRENGTH OF 2,000 PSI.
    C. MASONRY – STRENGTH CONFORMANCE TO ASTM C–90, GRADE N, TYPE 1 (OR GREATER).
    D. STEEL FRAMING – 2X BACKED 20GA., .039" MINIMUM.
13) MAXIMUM PANEL SIZE: 42" x 118 1/2"
14) RIGHT HAND SHOWN. LEFT HAND MODELS ALSO APPROVED.
15) DOOR SILL TO BE SET IN A FULL WIDTH, CONTINUOUS 3/16" THICK BED OF CONSTRUCTION SEALANT EQUAL TO OR BETTER THAN C.R. LAURENCE M64 POLYURETHANE CONSTRUCTION SEALANT HAVING 18 #/IN. (PLI) SHEAR STRENGTH. COMPATIBILITY OF ALUMINUM DOOR SILL, SEALANT AND ADJACENT SUBSTRATE TO BE DETERMINED BY ARCHITECT OF RECORD.

SIGNED: 03/18/2013

TABLE OF CONTENTS

PRODUCT REVISED
as complying with the Florida Building Code
Acceptance No. 12-0628.03
Expiration Date Aug 25, 2016
By Ishwar Chander
Miami Dade Product Control

WinDoor INCORPORATED
7500 AMSTERDAM DRIVE
ORLANDO, FL 32832
Phone: 407.481.8400
Fax: 407.481.0505
www.windoorinc.com

SERIES 9050 THERMALLY BROKEN ALUMINUM
INSWING TERRACE DOOR – LMI
ELEVATION, ANCHORING LAYOUT AND NOTES

DRAWN:	DWG NO.	REV
TJH	08–01175	C
SCALE NTS	DATE 11/09/10	SHEET 1 OF 15

LUIS R. LOMAS
LICENSE
No. 6251
STATE OF FLORIDA
PROFESSIONAL ENGINEER

REVISIONS			
REV	DESCRIPTION	DATE	APPROVED
A	REVISED PER MD COMMENTS	06/13/2011	R.L.
B	ADDED GLAZING C & HOPPE HARDWARE	12/16/12	R.L.
C	REVISED PER MD COMMENTS	03/18/13	R.L.

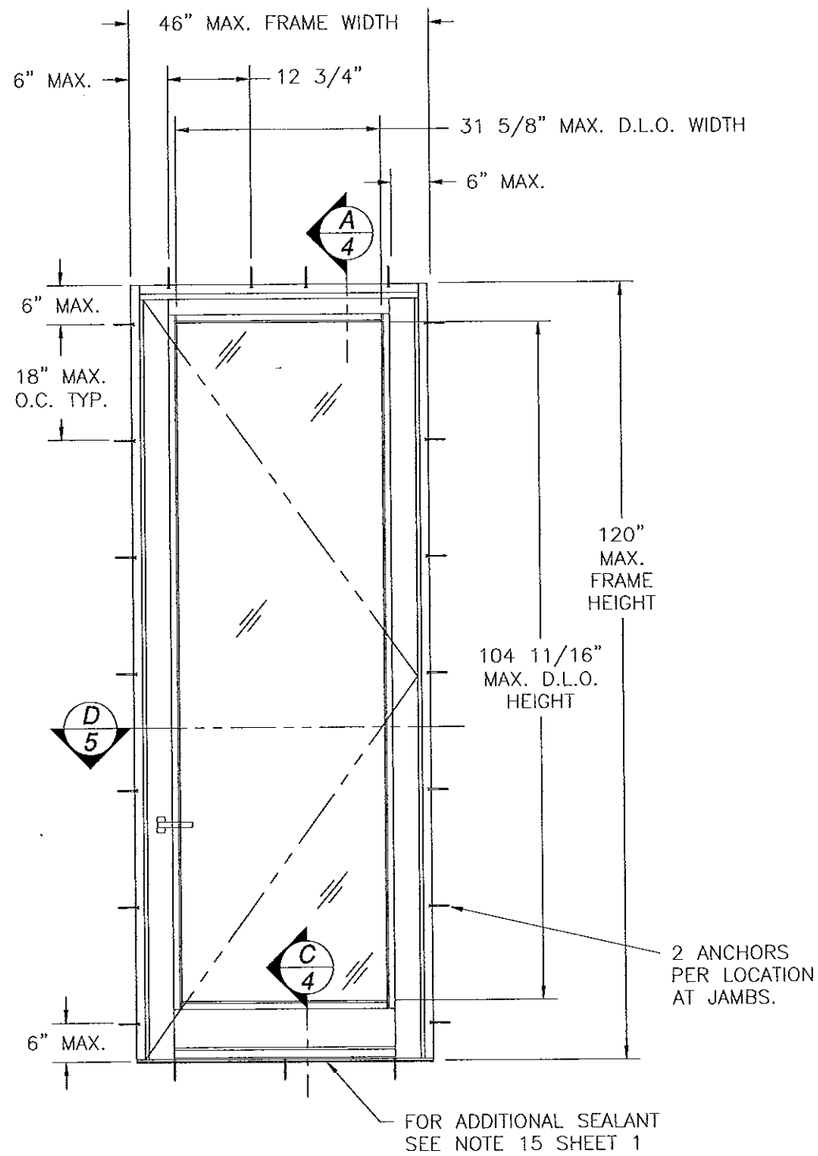

SERIES 9050 THERMALLY BROKEN ALUMINUM
INSWING TERRACE DOOR
WITH ADA SILL AND TALL BOTTOM RAIL
EXTERIOR VIEW

TABLE #2

Maximum design pressure capacity chart (psf)
Series 9050 Terrace IS Door with ADA Sill

Frame Height (in)	Frame Panel width (in)							
	28.0		34.0		40.0		46.0	
	Pos	Neg	Pos	Neg	Pos	Neg	Pos	Neg
80.0	80.0	150.0	80.0	149.0	80.0	126.0	80.0	110.0
84.0	80.0	150.0	80.0	149.0	80.0	126.0	80.0	110.0
96.0	80.0	150.0	80.0	146.2	80.0	126.0	80.0	110.0
108.0	80.0	150.0	80.0	142.8	80.0	125.5	80.0	110.0
120.0	80.0	150.0	80.0	140.2	80.0	122.7	80.0	110.0

MAXIMUM PANEL WIDTH FOR EGRESS APPLICATION PER FBC
TO BE REVIEWED BY AUTHORITY HAVING JURISDICTION.

TABLE #2

Number of anchor locations required.

Frame Height (in)	Frame Panel width (in)							
	28.0		34.0		40.0		46.0	
	H&S	Jamb	H&S	Jamb	H&S	Jamb	H&S	Jamb
80.0	3	5	3	5	4	5	4	5
84.0	3	5	3	5	4	5	4	5
96.0	3	6	3	6	4	6	4	6
108.0	3	7	3	7	4	7	4	7
120.0	3	7	3	7	4	7	4	7

JAMBS USE (2) ANCHORS PER LOCATION.

PANEL SIZE FORMULA:
PANEL HEIGHT = FRAME HEIGHT – 1.5"
PANEL WIDTH = FRAME WIDTH – 4.0"

D.L.O. FORMULA WITH STANDARD BOTTOM RAIL:
D.L.O. HEIGHT = FRAME HEIGHT – 15.375"
D.L.O. WIDTH = FRAME WIDTH – 14.375"

D.L.O. FORMULA WITH TALL BOTTOM RAIL:
D.L.O. HEIGHT = FRAME HEIGHT – 11.812"
D.L.O. WIDTH = FRAME WIDTH – 14.375"

SIGNED: 03/18/2013

PRODUCT REVISED
as complying with the Florida
Building Code
Acceptance No. 12-0628.03
Expiration Date 8/25/16
By Ishay I. Yamin
Miami Dade Product Control

WinDoor INCORPORATED
7500 AMSTERDAM DRIVE
ORLANDO, FL 32832
Phone: 407.481.8400
Fax: 407.481.0505
www.windoorinc.com

SERIES 9050 THERMALLY BROKEN ALUMINUM
INSWING TERRACE DOOR – LMI
ELEVATIONS AND ANCHORING LAYOUTS

LUIS R. LOMAS LICENSE No. 6251 STATE OF FLORIDA PROFESSIONAL ENGINEER

DRAWN:	DWG NO.	REV
TJH	08-01175	C
SCALE NTS	DATE 11/09/10	SHEET 2 OF 15

PARTS LIST				
NO.	PART NUMBER	DESCRIPTION	MANUFACTURER	MATERIAL
1	905A11	FRAME JAMB ASS'Y INSWING	KEYMARK	ALUMINUM 6063-T6
2	905A12	FRAME HEAD & STANDARD SILL ASS'Y	KEYMARK	ALUMINUM 6063-T6
3	S46079	ADA SILL ASS'Y W/URITHANE BREAK	KEYMARK	ALUMINUM 6063-T6
4	S46083	GLASS STOP 1.625	KEYMARK	ALUMINUM 6063-T6
5	905A04	STILE ASS'Y INSWING	KEYMARK	ALUMINUM 6063-T6
6	S46082	GLASS STOP .5625	KEYMARK	ALUMINUM 6063-T6
7	905A06	TOP & BOTTOM RAIL ASS'Y INSWING	KEYMARK	ALUMINUM 6063-T6
8		20mm STRUT	TECHNOFORM US	POLYMIDE 66-GF25
9	905A08	TALL BOTTOM RAIL ASS'Y INSWING	KEYMARK	ALUMINUM 6063-T6
10	905A09	ADA BOTTOM RAIL ADAPTER ASS'Y	KEYMARK	ALUMINUM 6063-T6
11	S46080	EURO FRAME GROOVE COVER	KEYMARK	ALUMINUM 6063-T6
12	S46085	JAMB & HEAD COVER PLATE	KEYMARK	ALUMINUM 6063-T6
13	S46086	STANDARD SILL COVER PLATE	KEYMARK	ALUMINUM 6063-T6
14	S46084	GLASS STOP 1.25	KEYMARK	ALUMINUM 6063-T6
15	52105	SPONGE WITH ADHESIVE BACK		EDPM
16	00598N	FLASH XXL DOOR HINGE	GIESSE	
17	00599	HINGE COVER	GIESSE	
18	04650	LEVER ACTIVATED GEAR BOX - 45MM	GIESSE	
19	4637	6131 W/KEY & THUMB TURN	GIESSE	
20	4636	3161 W/ KEY & THUMB TURN	GIESSE	
21	02472	PRIMA COUPLE DOOR HANDLE	GIESSE	
22	1315-MC2	LOCKING PLATES	ADVANTAGE MFG.	
23	1335-1	EUROGROOVE KEEPERS	ADVANTAGE MFG.	
24	04019	CORNER DRIVE	GIESSE	
25	04655	STRIKE PLATE	GIESSE	
26	01362N	ADJUSTABLE STRIKER	GIESSE	
27	03524	CONNECTING ROD	GIESSE	
28	1445	SNUBBER DRIVE	ADVANTAGE MFG.	
29		14mm STRUT	TECHNOFORM US	POLYMIDE 66-GF25
30	TP1046	#7 GLAZING VINYL		VINYL
31		#8 x 1" PH SQ. DR. L-POINT		STAINLESS STEEL
32		#8 x 1" PFH SMS SCREW		STAINLESS STEEL
33	131022	#10 x 1 1/4" PH SQ. DR. L-POINT	CORNER CONSTRC.	STAINLESS STEEL
34		#10 x1 1/4" PFH SELF DRILLING		STAINLESS STEEL
35	5-3820-RB-1	STILE & RAIL FLANGE WEATHERSTRIP	LAUREN MFG.	
36	4-2709	TOP & BOTTOM RAIL WEATHERSTRIP	LAUREN MFG.	
37	905VP-22-SEAL	SPONGE SEAL	LAUREN MFG.	EDPM
38	905VX-19	STRUT COVER IS	LAUREN MFG.	EDPM
39		#10 x 2" FH TEK SCREW		STAINLESS STEEL
40	8303-01-00	FLEX COEX BOTTOM SWEEP	TRELLBORG	RIGID PVC

REVISIONS			
REV	DESCRIPTION	DATE	APPROVED
A	REVISED PER MD COMMENTS	06/13/2011	R.L.
B	ADDED GLAZING C & HOPPE HARDWARE	12/16/12	R.L.
C	REVISED PER MD COMMENTS	03/18/13	R.L.

PARTS LIST				
NO.	PART NUMBER	DESCRIPTION	MANUFACTURER	MATERIAL
41	TP-448	FILLER STRIP	TEAM PLASTICS	PVC 92 DUROMETER
42	SETTING BLOCK	GLASS SHIM 1/4" x 3/4" x 1"		NEOPRENE 80D
43	FG0015011	#3 S OR EQUIVALENT JOINT SEALANT	C.R. LAWRENCE	SILICONE
44	SIKAFAST552	GLAZING COMPOUND	SIKA CORP.	URETHANE
45		#10 x 3/4" PPH SCREW		STAINLESS STEEL
46		#10 x 1 1/2" PPH SCREW		STAINLESS STEEL

ITEMS 4, 6, 8, 29, AND 39 ARE NOT USED.

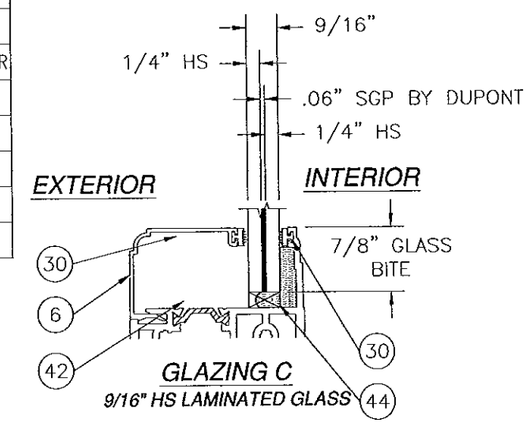

GLAZING C
9/16" HS LAMINATED GLASS

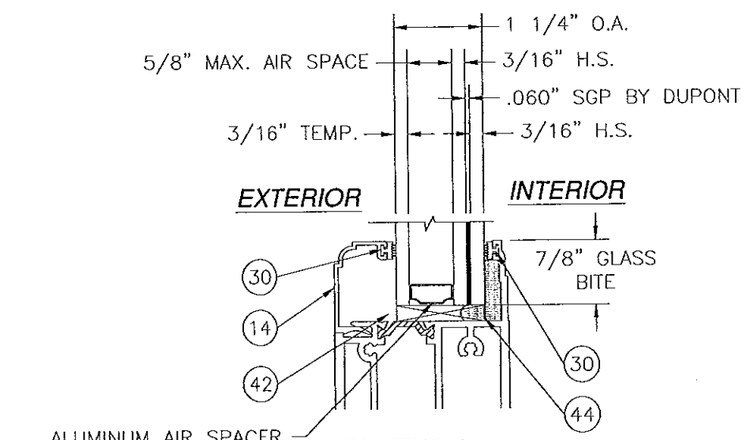

ALUMINUM AIR SPACER
5/8"W X 1/4"H X .015"T
BY HELMA

GLAZING A
1 1/4" INSULATED
HS LAMINATED GLASS

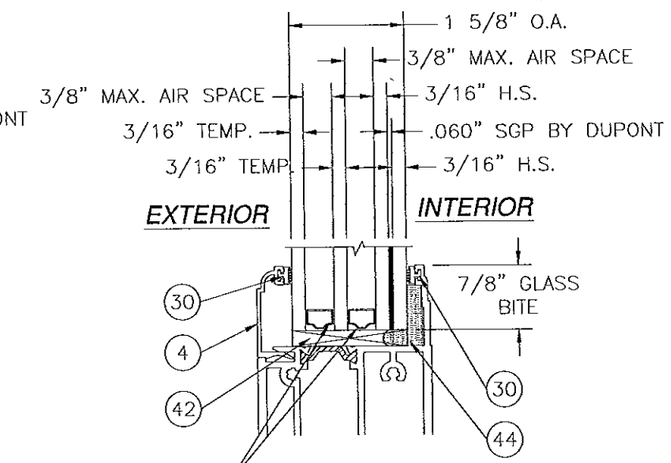

ALUMINUM AIR SPACER
3/8"W X 1/4"H X .015"T
BY HELMA

GLAZING B
1 5/8" INSULATED
HS LAMINATED GLASS

SIGNED: 03/18/2013

PRODUCT REVISED
In complying with the Florida Building Code
Acceptance No. 12-0628.03
Expiration Date 8/25/16
By Ishay I. Hanuel
Miami Dade Product Control

WinDoor INCORPORATED
7500 AMSTERDAM DRIVE
ORLANDO, FL 32832
Phone: 407.481.8400
Fax: 407.481.0505
www.windoorinc.com

SERIES 9050 THERMALLY BROKEN ALUMINUM
INSWING TERRACE DOOR - LMI
BILL OF MATERIALS AND GLAZING OPTIONS

DRAWN:	DWG NO.	REV
TJH	08-01175	C
SCALE NTS	DATE 11/09/10	SHEET 3 OF 15

LUIS R. LOMAS
LICENSE
No. 6251
STATE OF FLORIDA
PROFESSIONAL ENGINEER

REVISIONS			
REV	DESCRIPTION	DATE	APPROVED
A	REVISED PER MD COMMENTS	06/13/2011	R.L.
B	ADDED GLAZING C & HOPPE HARDWARE	12/16/12	R.L.
C	REVISED PER MD COMMENTS	03/18/13	R.L.

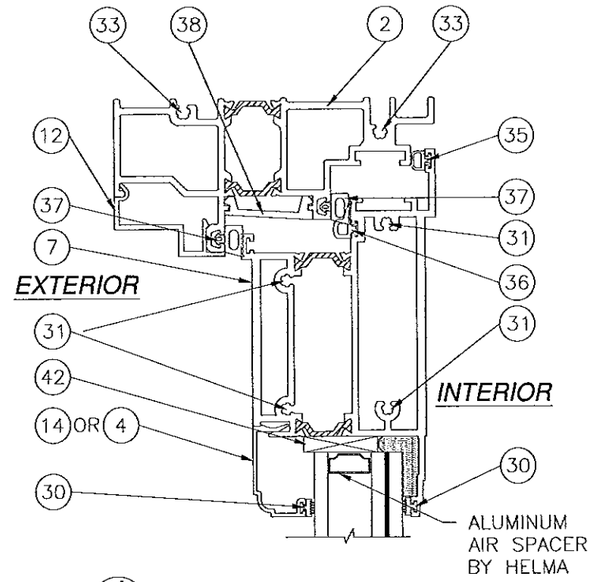

A/4 VERTICAL CROSS SECTION

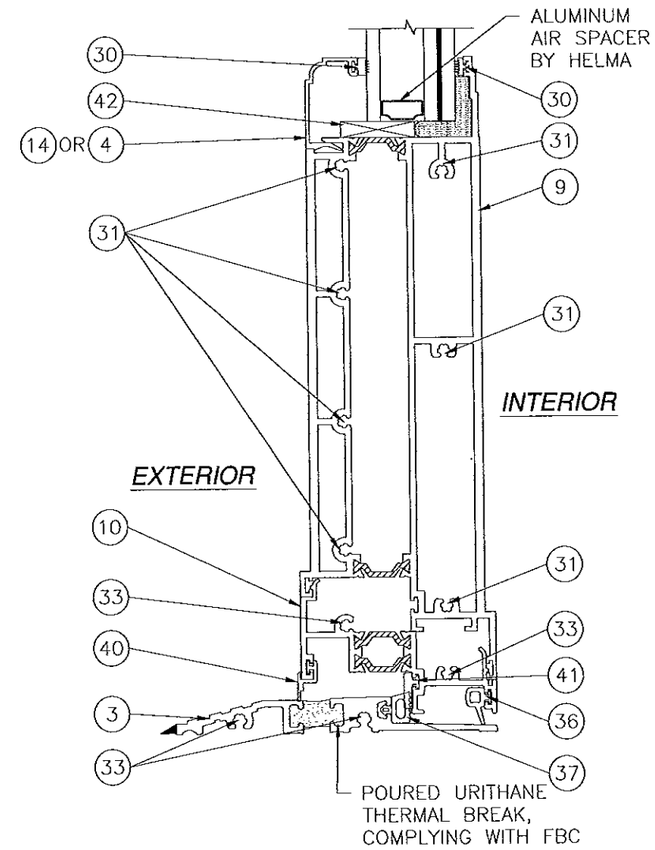

C/4 VERTICAL CROSS SECTION
DOOR W/ADA SILL

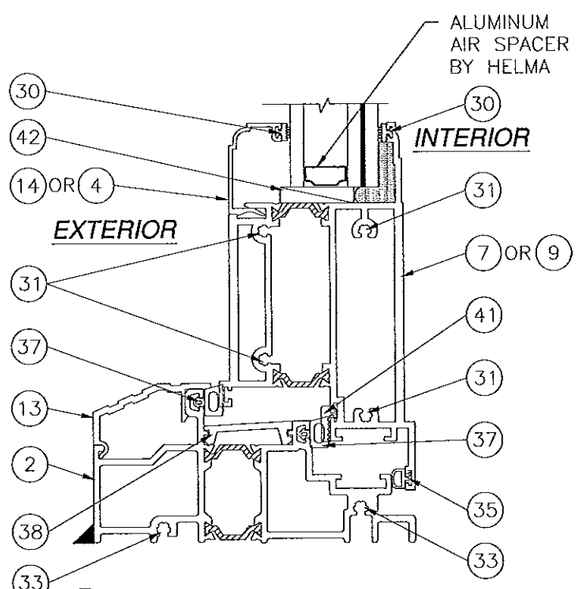

B/4 VERTICAL CROSS SECTION
DOOR W/STANDARD SILL
STANDARD BOTTOM RAIL SHOWN,
TALL BOTTOM RAIL OPTIONAL

SIGNED: 03/18/2013

PRODUCT REVISED
as complying with the Florida
Building Code
Acceptance No. 12-0628.03
Expiration Date 8/25/16
By [illegible]
Miami Dade Product Control

WinDoor INCORPORATED
7500 AMSTERDAM DRIVE
ORLANDO, FL 32832
Phone: 407.481.8400
Fax: 407.481.0505
www.windoorinc.com

SERIES 9050 THERMALLY BROKEN ALUMINUM
INSWING TERRACE DOOR – LMI
VERTICAL CROSS SECTIONS

DRAWN:	DWG NO.	REV
TJH	08-01175	C
SCALE NTS	DATE 11/09/10	SHEET 4 OF 15

LUIS R. LOMAS
LICENSE
No. 62514
STATE OF
FLORIDA
PROFESSIONAL ENGINEER

REVISIONS			
REV	DESCRIPTION	DATE	APPROVED
A	REVISED PER MD COMMENTS	06/13/2011	R.L.
B	ADDED GLAZING C & HOPPE HARDWARE	12/16/12	R.L.
C	REVISED PER MD COMMENTS	03/18/13	R.L.

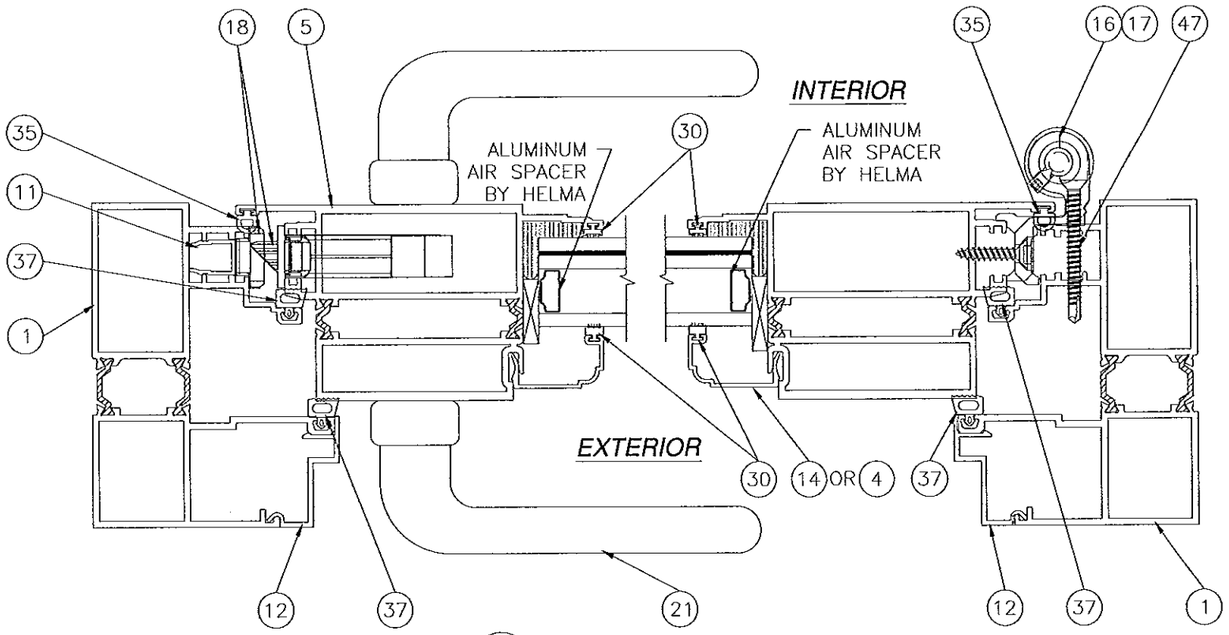

D/5 HORIZONTAL CROSS SECTION

FRAME CONSTRUCTION:
FRAME CORNERS ARE COPED AND BUTTED. JAMBS ARE ATTACHED TO HEAD, STANDARD SILL AND ADA SILL USING (2) #10 x 1 1/4" PH SQUARE DRIVE LEAD POINT SS SCREWS, ITEM #33, AT EACH CORNER.

PANEL CONSTRUCTION:
STANDARD BOTTOM RAIL IS ATTACHED TO STILES WITH (4) #8 x 1" PH SQUARE DRIVE LEAD POINT SS SCREWS, (2) AT INTERIOR EXTRUSION AND (2) AT EXTERIOR EXTRUSION.

TALL BOTTOM RAIL IS ATTACHED TO STILES WITH (7) #8 x 1" PH SQUARE DRIVE LEAD POINT SS SCREWS, (4) AT INTERIOR EXTRUSION AND (3) AT EXTERIOR EXTRUSION.

TOP RAIL IS ATTACHED TO STILES WITH (4) #8 x 1" PH SQUARE DRIVE LEAD POINT SS SCREWS, (2) AT INTERIOR EXTRUSION AND (2) AT EXTERIOR EXTRUSION.

WHEN ADA SILL IS USED BOTTOM RAIL IS FITTED WITH ADA BOTTOM RAIL ADAPTER ASSEMBLY, ITEM #10. ADA BOTTOM RAIL ADAPTER IS SNAP FIT TO BOTTOM RAIL AND ATTACHED TO STILES WITH (2) #8 x 1" PH SQUARE DRIVE LEAD POINT SS SCREWS.

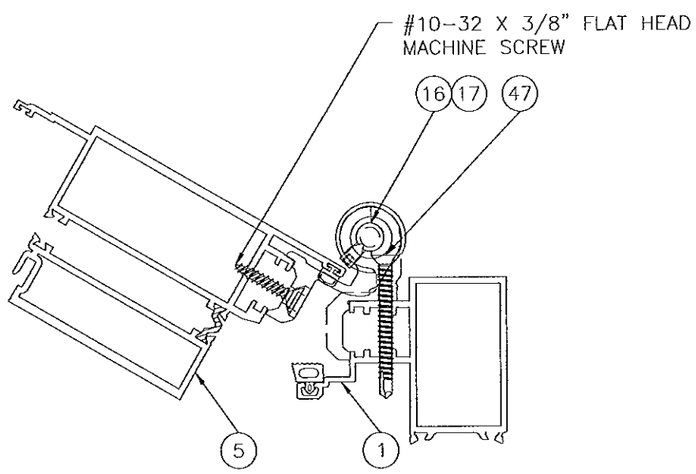

HINGE DETAIL

SIGNED: 03/18/2013

PRODUCT REVISED
as complying with the Florida Building Code
Acceptance No. 12-0628.03
Expiration Date 8/25/16
By
Miami Dade Product Control

WinDoor INCORPORATED
7500 AMSTERDAM DRIVE
ORLANDO, FL 32832
Phone: 407.481.8400
Fax: 407.481.0505
www.windoorinc.com

SERIES 9050 THERMALLY BROKEN ALUMINUM
INSWING TERRACE DOOR – LMI
HORIZONTAL CROSS SECTIONS

DRAWN:	DWG NO.	REV
TJH	08-01175	C
SCALE NTS	DATE 11/09/10	SHEET 5 OF 15

LUIS R. LOMAS
LICENSE
No. 62514
STATE OF FLORIDA
PROFESSIONAL ENGINEER

REVISIONS			
REV	DESCRIPTION	DATE	APPROVED
A	REVISED PER MD COMMENTS	06/13/2011	R.L.
B	ADDED GLAZING C & HOPPE HARDWARE	12/16/12	R.L.
C	REVISED PER MD COMMENTS	03/18/13	R.L.

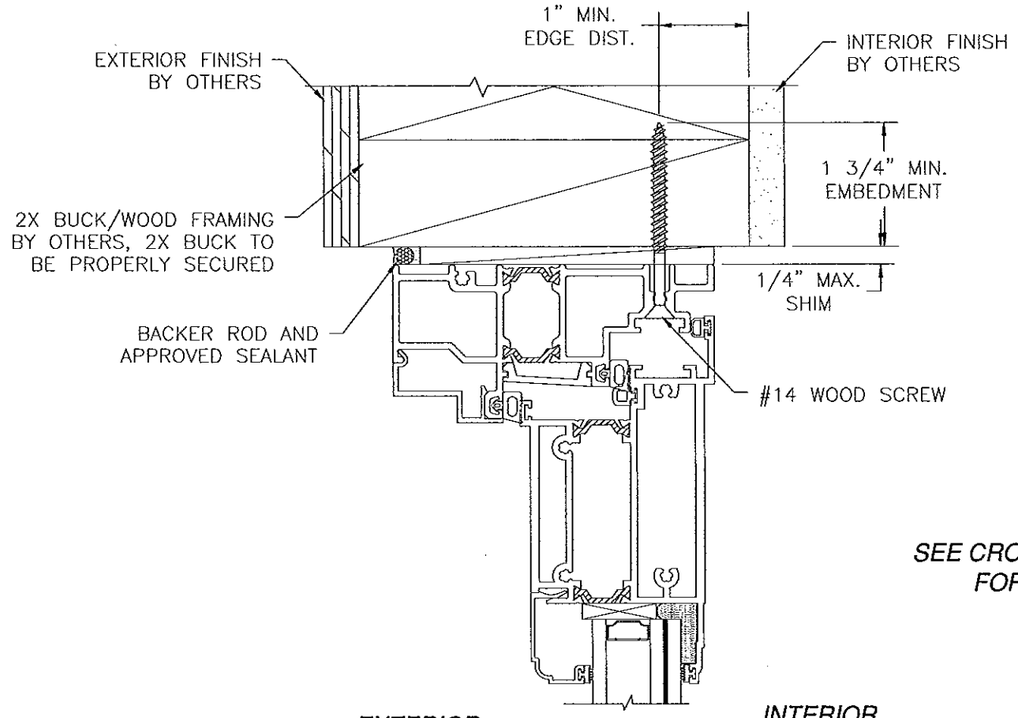

SEE CROSS SECTIONS SHEETS 4 AND 5 FOR COMPONENT CALLOUTS.

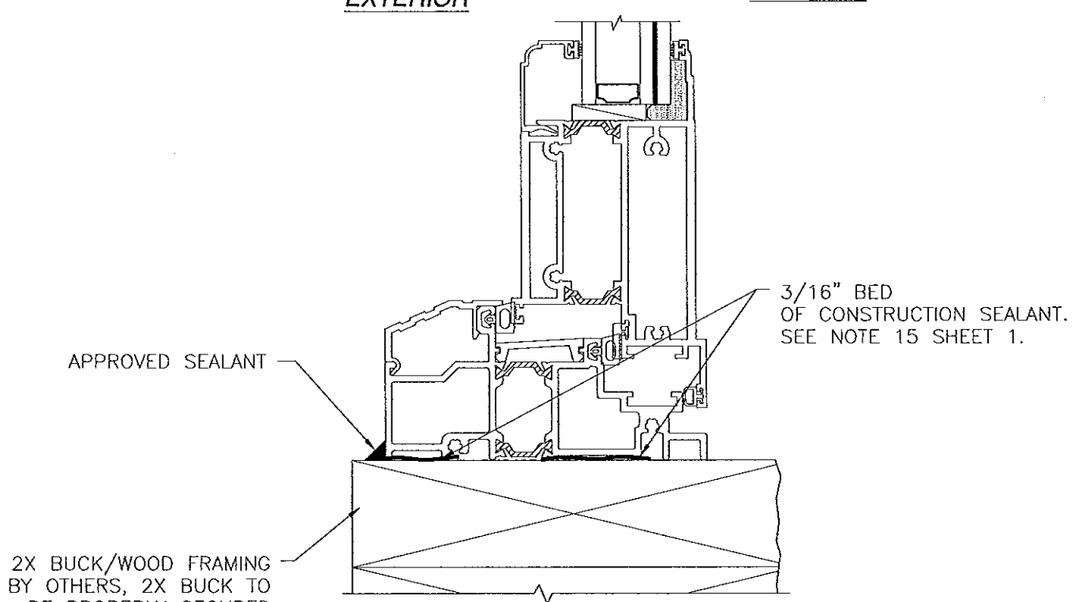

VERTICAL CROSS SECTION
2X BUCK/WOOD FRAMING INSTALLATION
STANDARD SILL WITH
STANDARD BOTTOM RAIL SHOWN,
TALL BOTTOM ALSO APPROVED

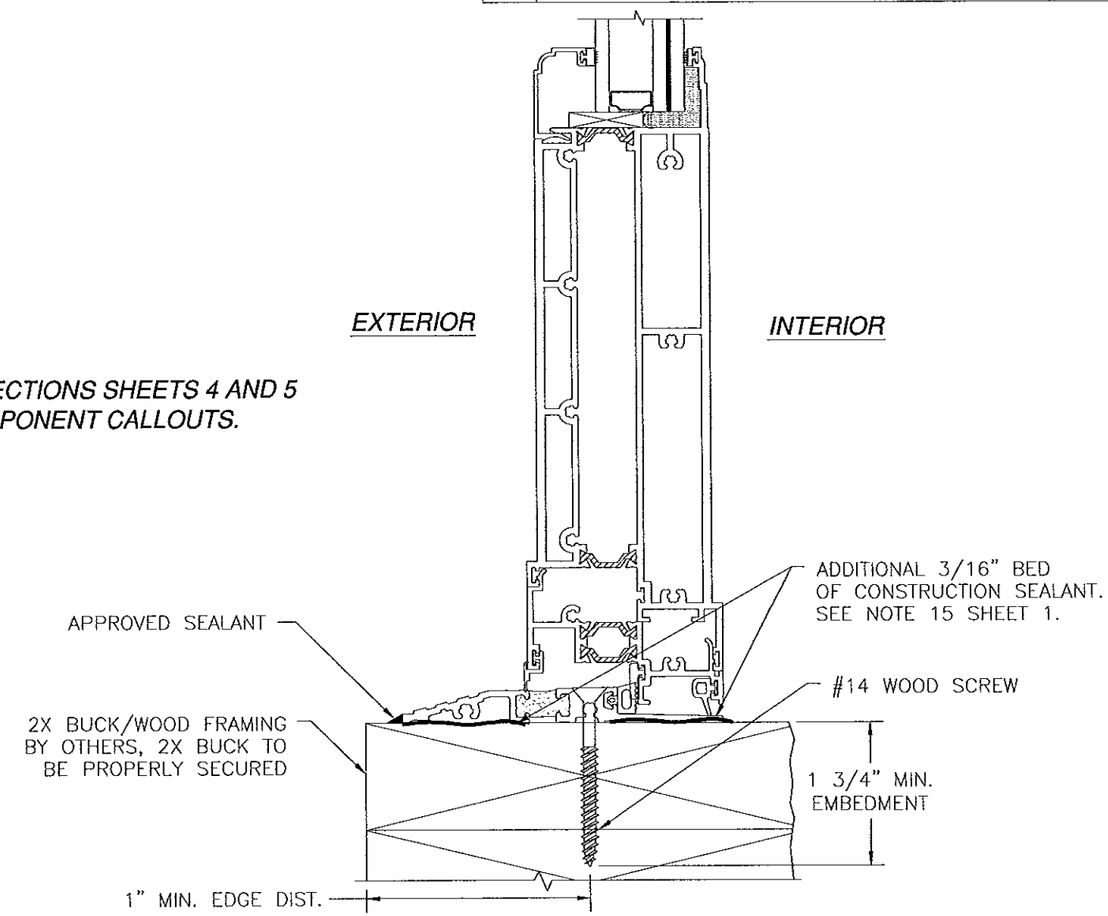

VERTICAL CROSS SECTION
2X BUCK/WOOD FRAMING INSTALLATION
ADA SILL WITH
TALL BOTTOM RAIL

SIGNED: 03/18/2013

PRODUCT REVISED
as complying with the Florida Building Code
Acceptance No. 12-0622-01
Expiration Date 3/25/16
By [illegible]
Miami-Dade Product Control

WinDoor INCORPORATED
7500 AMSTERDAM DRIVE
ORLANDO, FL 32832
Phone: 407.481.8400
Fax: 407.481.0505
www.windoorinc.com

SERIES 9050 THERMALLY BROKEN ALUMINUM
INSWING TERRACE DOOR – LMI
INSTALLATION DETAILS

DRAWN:	DWG NO.	REV
TJH	08-01175	C
SCALE NTS	DATE 11/09/10	SHEET 6 OF 15

LUIS R. LOMAS
LICENSE No. 62514
STATE OF FLORIDA
PROFESSIONAL ENGINEER

REVISIONS			
REV	DESCRIPTION	DATE	APPROVED
A	REVISED PER MD COMMENTS	06/13/2011	R.L.
B	ADDED GLAZING C & HOPPE HARDWARE	12/16/12	R.L.
C	REVISED PER MD COMMENTS	03/18/13	R.L.

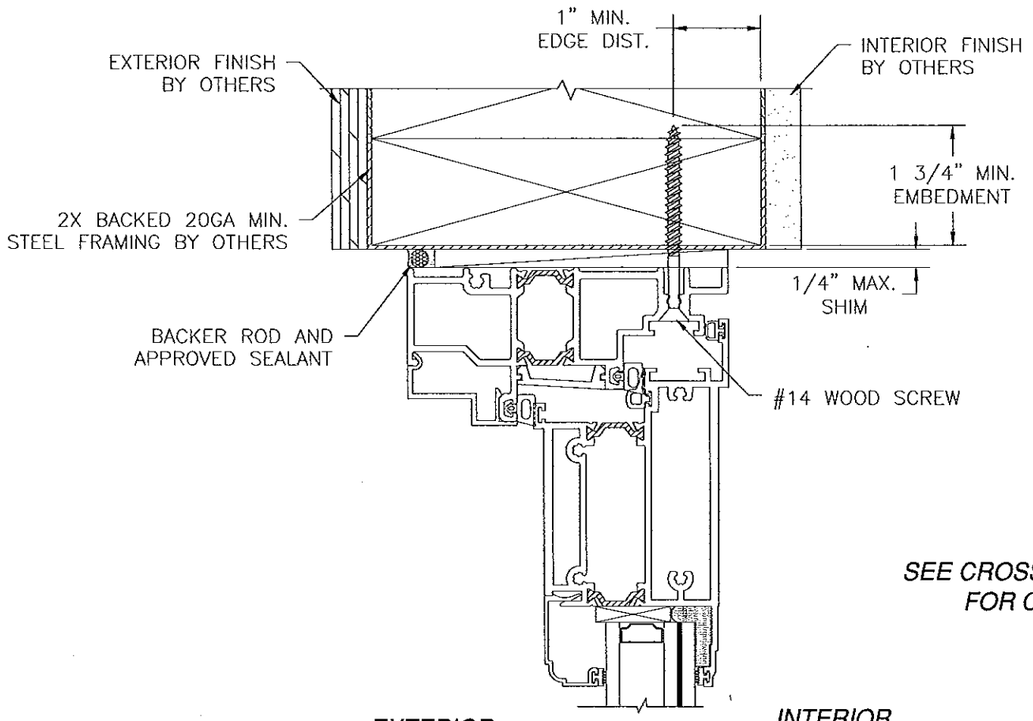

SEE CROSS SECTIONS SHEETS 4 AND 5 FOR COMPONENT CALLOUTS.

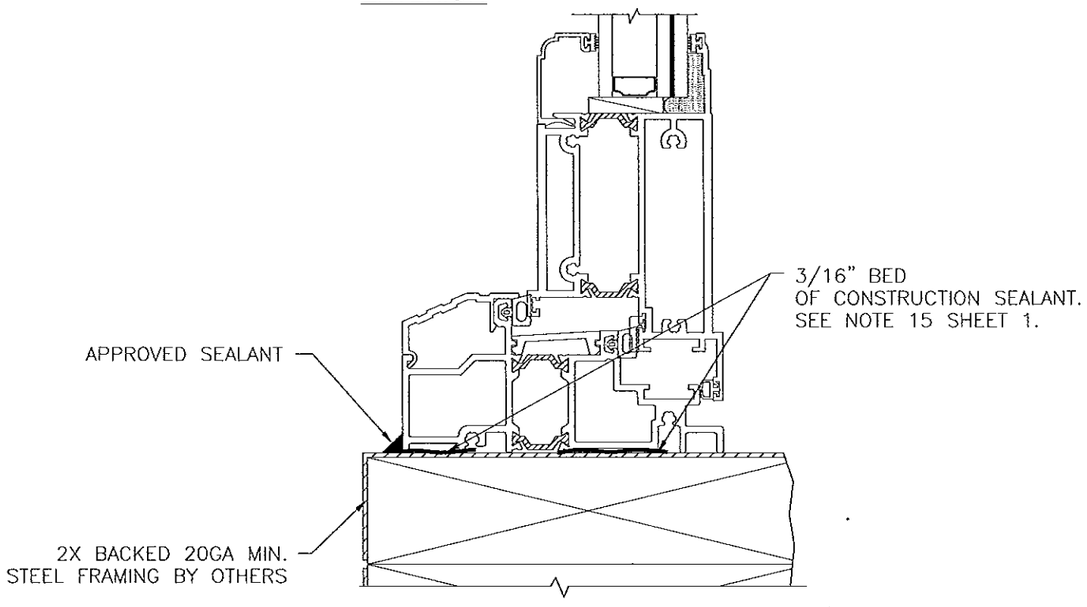

VERTICAL CROSS SECTION
2X BACKED STEEL FRAMING INSTALLATION
STANDARD SILL WITH
STANDARD BOTTOM RAIL SHOWN,
TALL BOTTOM ALSO APPROVED

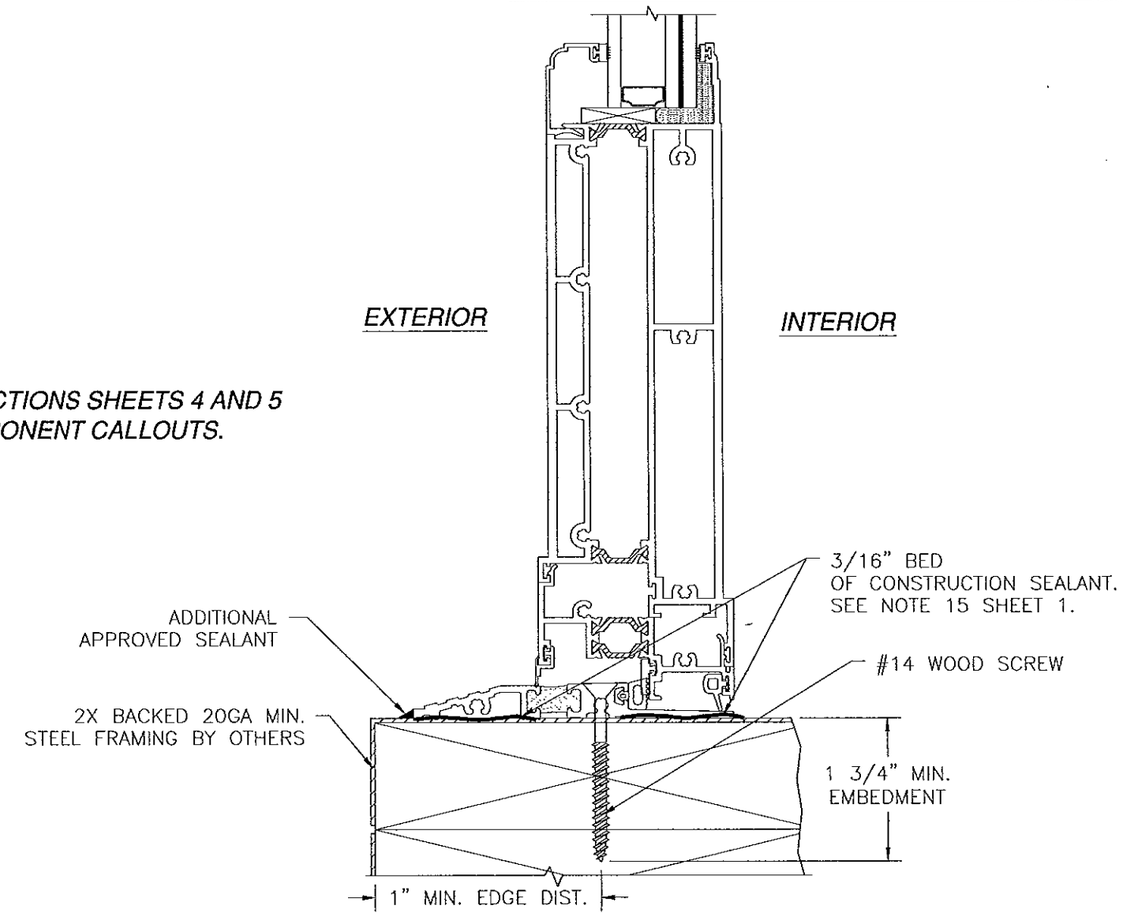

VERTICAL CROSS SECTION
2X BACKED STEEL FRAMING INSTALLATION
ADA SILL, ADAPTER WITH
TALL BOTTOM RAIL

SIGNED: 03/18/2013

PRODUCT REVISED
In complying with the Florida Building Code
Acceptance No. 12-0628.03
Expiration Date 8/25/16
By Miami Dade Product Control

WinDoor INCORPORATED
7500 AMSTERDAM DRIVE
ORLANDO, FL 32832
Phone: 407.481.8400
Fax: 407.481.0505
www.windoorinc.com

SERIES 9050 THERMALLY BROKEN ALUMINUM
INSWING TERRACE DOOR – LMI
INSTALLATION DETAILS

DRAWN:	DWG NO.	REV
TJH	08-01175	C
SCALE NTS	DATE 11/09/10	SHEET 7 OF 15

LUIS R. LOMAS
LICENSE No. 62514
STATE OF FLORIDA
PROFESSIONAL ENGINEER

REVISIONS			
REV	DESCRIPTION	DATE	APPROVED
A	REVISED PER MD COMMENTS	06/13/2011	R.L.
B	ADDED GLAZING C & HOPPE HARDWARE	12/16/12	R.L.
C	REVISED PER MD COMMENTS	03/18/13	R.L.

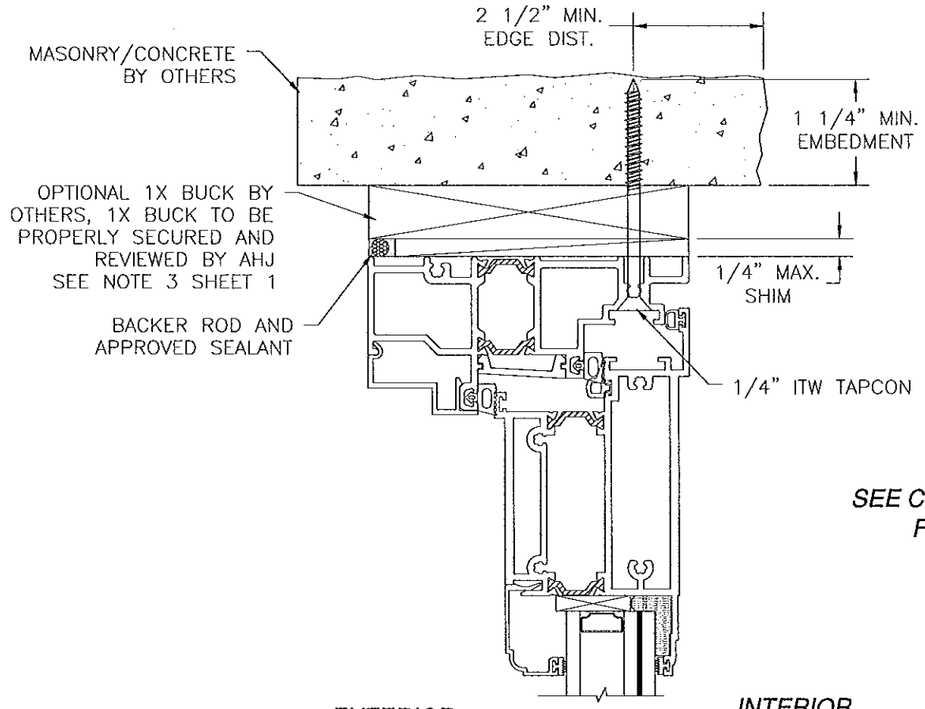

SEE CROSS SECTIONS SHEETS 4 AND 5 FOR COMPONENT CALLOUTS.

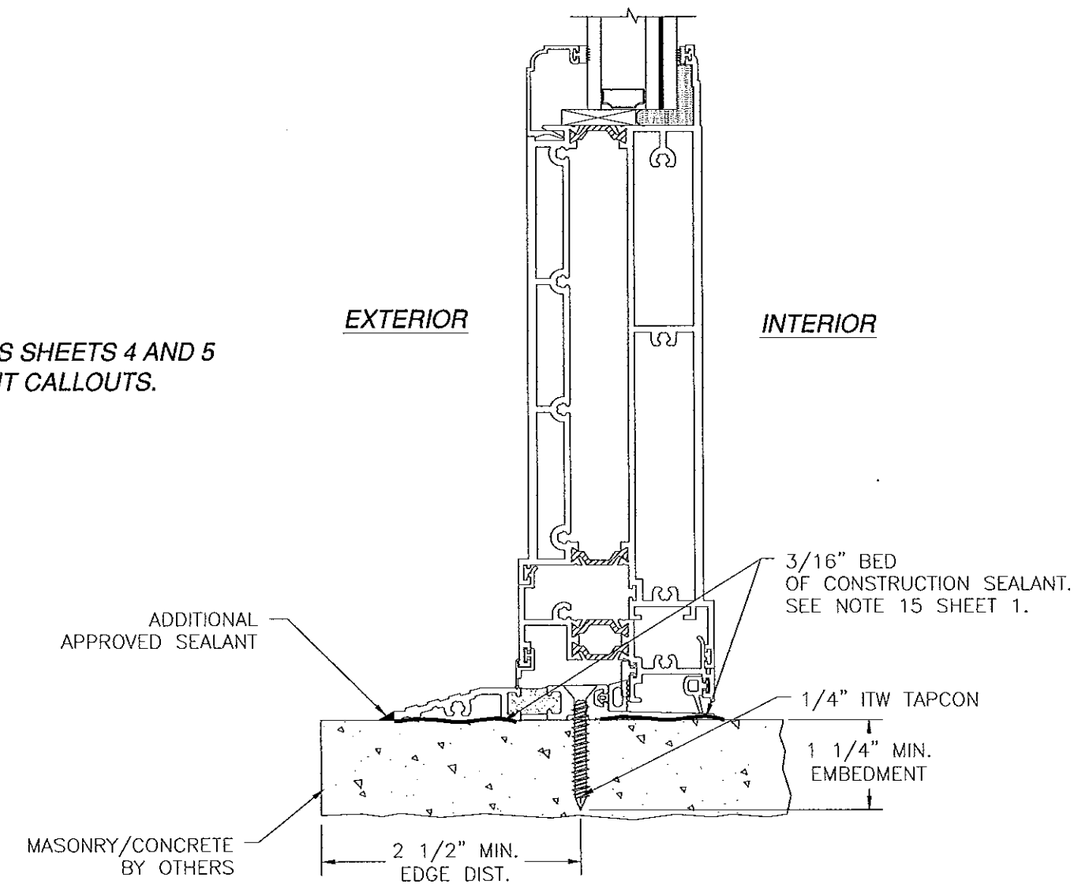

VERTICAL CROSS SECTION
MASONRY/CONCRETE INSTALLATION
ADA SILL, ADAPTER WITH
TALL BOTTOM RAIL

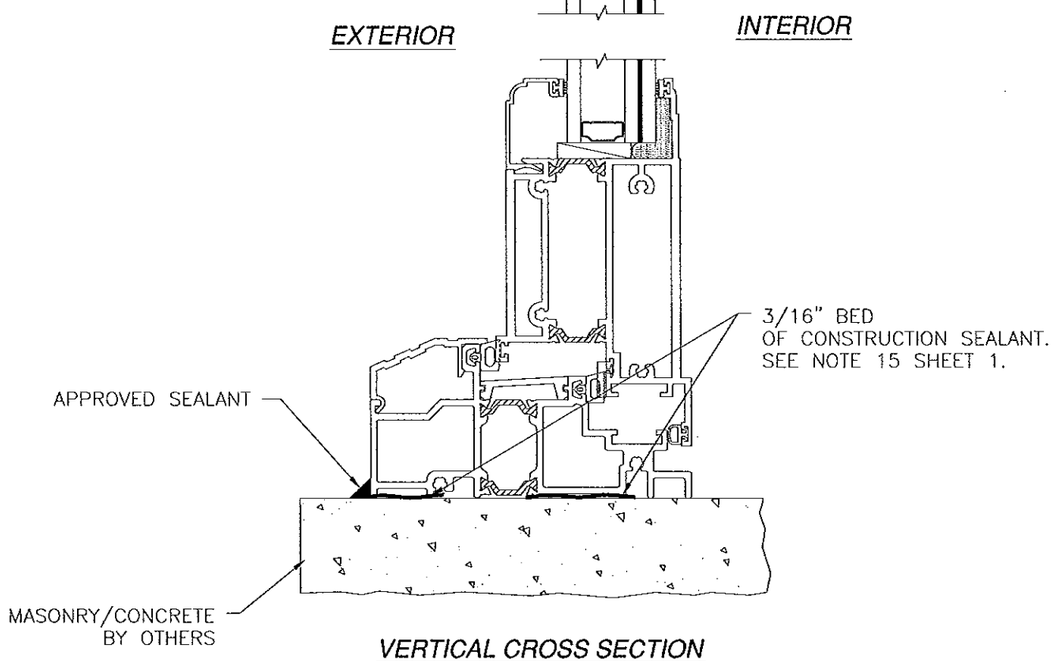

VERTICAL CROSS SECTION
MASONRY/CONCRETE INSTALLATION
STANDARD SILL WITH
STANDARD BOTTOM RAIL SHOWN,
TALL BOTTOM ALSO APPROVED

SIGNED: 03/18/2013

PRODUCT REVIEWED
as complying with the Florida
Building Code
Acceptance No. 12-0628.03
Expiration Date 8/25/16
By
Miami Dade Product Control

WinDoor INCORPORATED
7500 AMSTERDAM DRIVE
ORLANDO, FL 32832
Phone: 407.481.8400
Fax: 407.481.0505
www.windoorinc.com

SERIES 9050 THERMALLY BROKEN ALUMINUM
INSWING TERRACE DOOR – LMI
INSTALLATION DETAILS

DRAWN:	DWG NO.	REV
TJH	08-01175	C
SCALE NTS / DATE 11/09/10	SHEET 8 OF 15	

LUIS R. LOMAS
LICENSE
No. 62514
STATE OF FLORIDA
PROFESSIONAL ENGINEER

REVISIONS			
REV	DESCRIPTION	DATE	APPROVED
A	REVISED PER MD COMMENTS	06/13/2011	R.L.
B	ADDED GLAZING C & HOPPE HARDWARE	12/16/12	R.L.
C	REVISED PER MD COMMENTS	03/18/13	R.L.

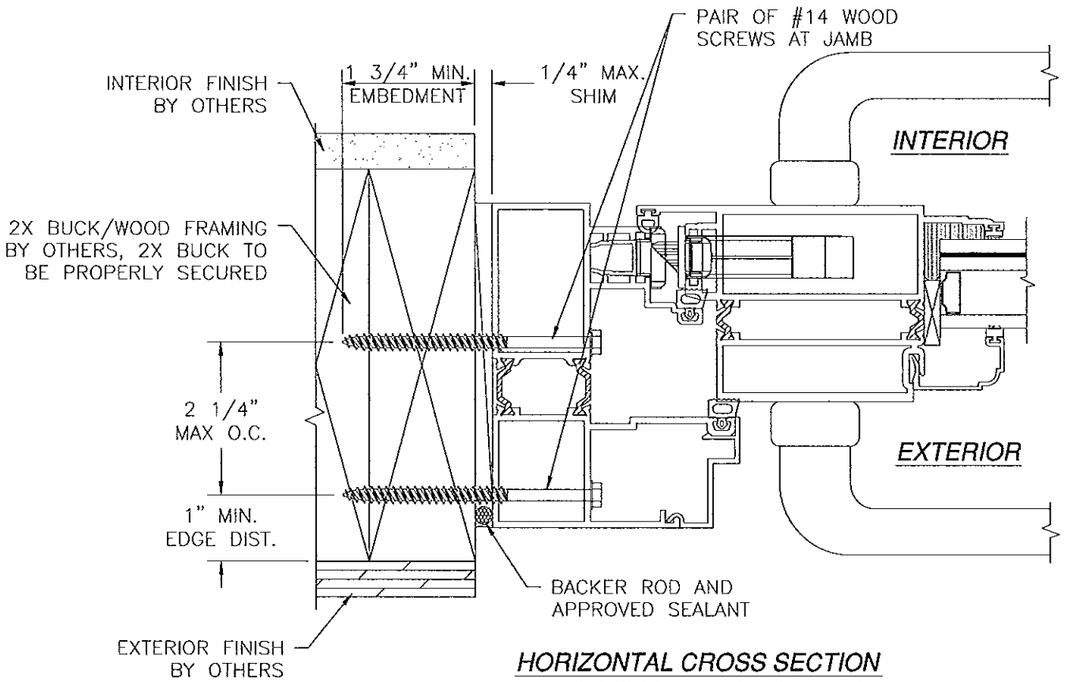

HORIZONTAL CROSS SECTION
2X BUCK/WOOD FRAMING INSTALLATION
STRIKE JAMB SHOWN
HINGE JAMB SIMILAR

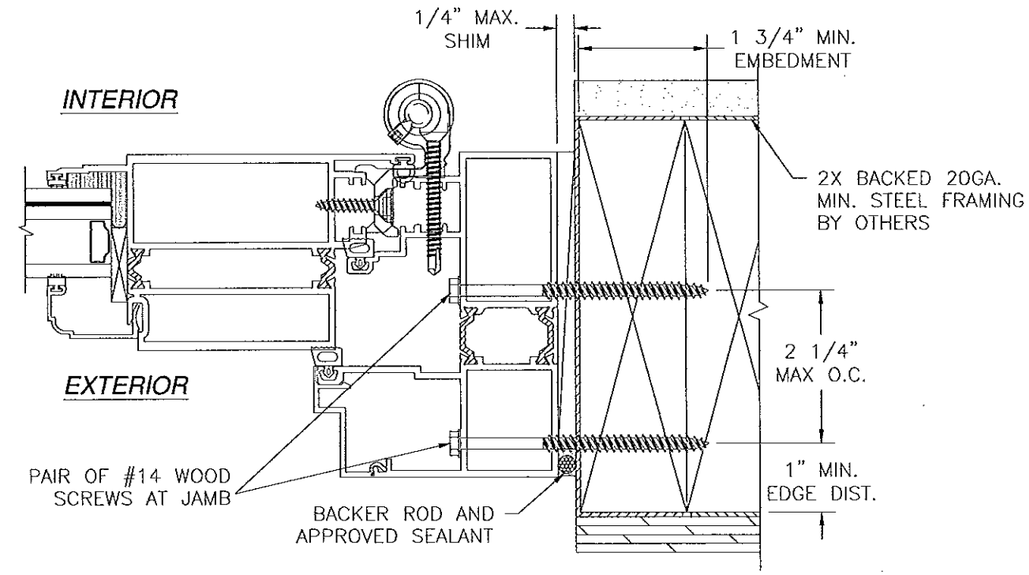

HORIZONTAL CROSS SECTION
2X BACKED STEEL FRAMING INSTALLATION
HINGE JAMB SHOWN
STRIKE JAMB SIMILAR

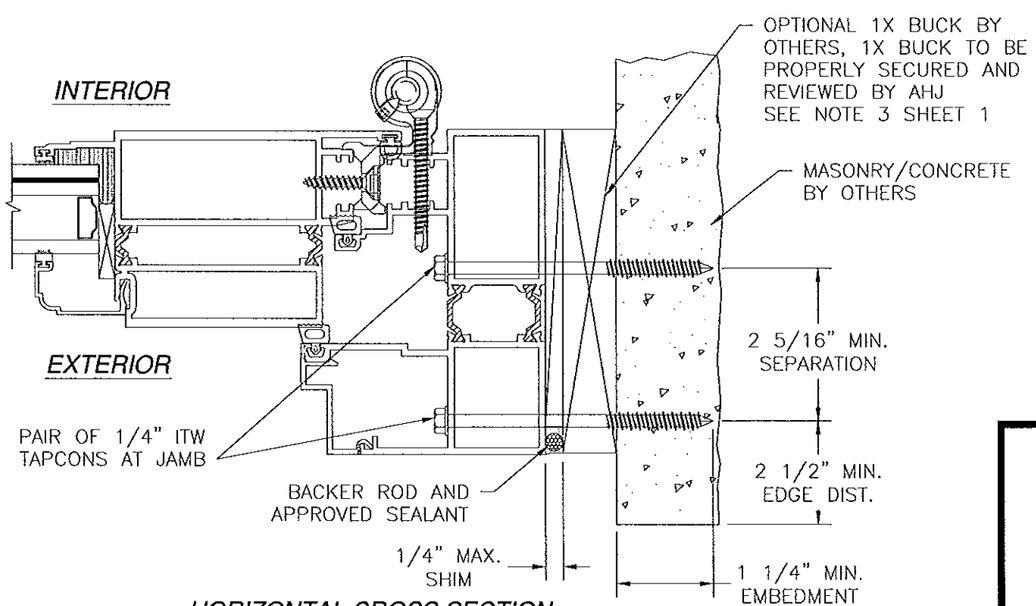

HORIZONTAL CROSS SECTION
MASONRY/CONCRETE INSTALLATION
HINGE JAMB SHOWN
STRIKE JAMB SIMILAR

SEE CROSS SECTIONS SHEETS 4 AND 5 FOR COMPONENT CALLOUTS.

SIGNED: 03/18/2013

PRODUCT REVISED
on complying with the Florida Building Code
Acceptance No 12-0622.03
Expiration Date 8/25/16
By
Miami Dade Product Control

WinDoor INCORPORATED
7500 AMSTERDAM DRIVE
ORLANDO, FL 32832
Phone: 407.481.8400
Fax: 407.481.0505
www.windoorinc.com

SERIES 9050 THERMALLY BROKEN ALUMINUM INSWING TERRACE DOOR – LMI INSTALLATION DETAILS

DRAWN:	DWG NO.	REV
TJH	08-01175	C
SCALE NTS	DATE 11/09/10	SHEET 9 OF 15

LUIS R. LOMAS LICENSE No. 62514 STATE OF FLORIDA PROFESSIONAL ENGINEER

REVISIONS			
REV	DESCRIPTION	DATE	APPROVED
A	REVISED PER MD COMMENTS	06/13/2011	R.L.
B	ADDED GLAZING C & HOPPE HARDWARE	12/16/12	R.L.
C	REVISED PER MD COMMENTS	03/18/13	R.L.

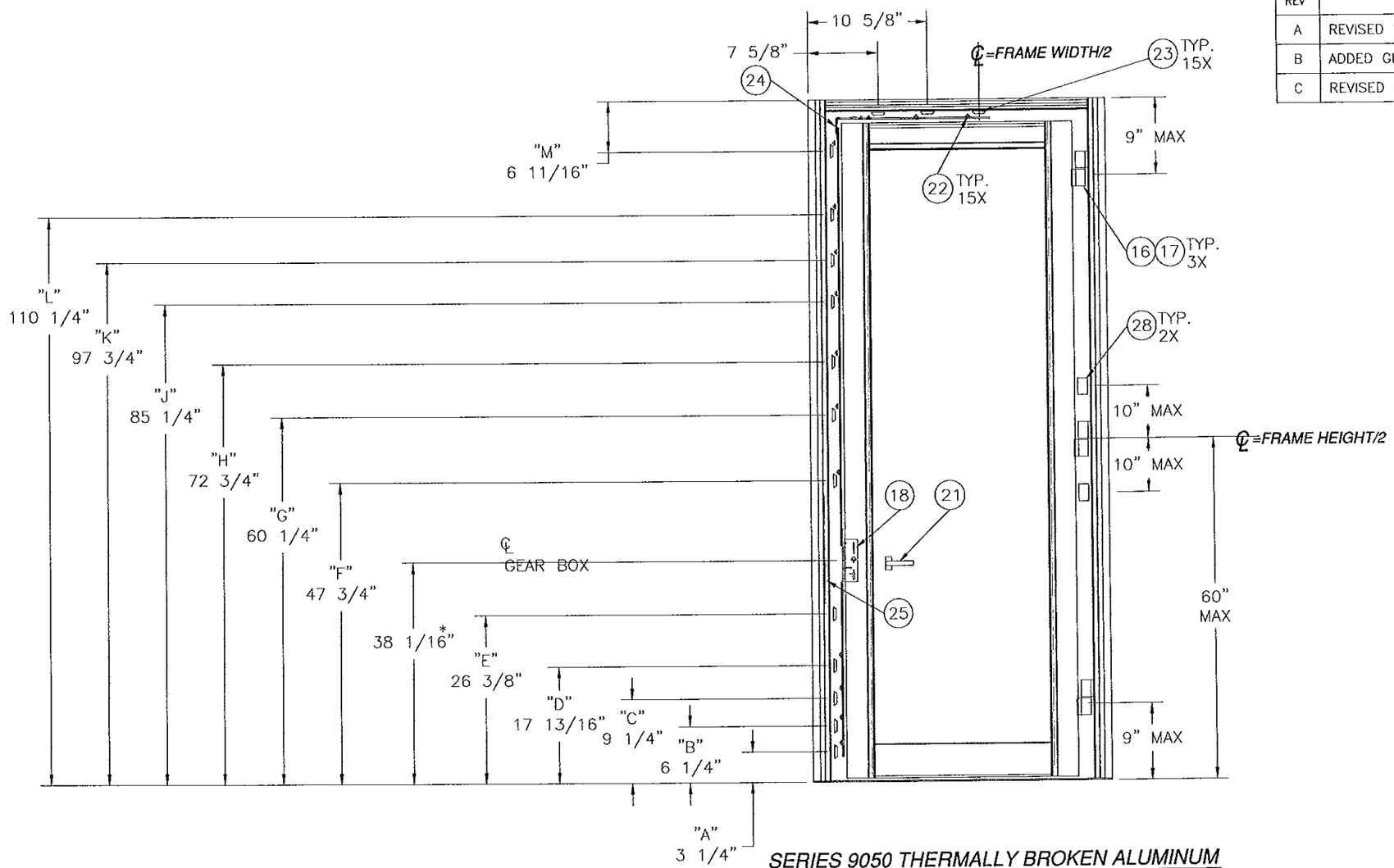

SERIES 9050 THERMALLY BROKEN ALUMINUM
INSWING TERRACE DOOR WITH ADA SILL AND GIESSE HARDWARE
EXTERIOR VIEW

NOTE:
DIMENSIONS MARKED WITH * ARE CENTER OF LEVER ACTIVATED GEAR BOX. ALL OTHER DIMENSIONS ARE CENTER OF KEEPERS.

REQUIRED EUROGROOVE KEEPER LOCATIONS PER DOOR HEIGHT WITH ADA SILL:

80" HIGH = A THRU H AND M
84" HIGH = A THRU H AND M
96" HIGH = A THRU J AND M
108" HIGH = A THRU K AND M
120" HIGH = A THRU M

SIGNED: 03/18/2013

PRODUCT REVISED
as complying with the Florida Building Code
Acceptance No. 12-0628.03
Expiration Date 8/25/16
By
Miami Dade Product Control

WinDoor INCORPORATED
7500 AMSTERDAM DRIVE
ORLANDO, FL 32832
Phone: 407.481.8400
Fax: 407.481.0505
www.windoorinc.com

SERIES 9050 THERMALLY BROKEN ALUMINUM
INSWING TERRACE DOOR – LMI
HARDWARE LAYOUT

DRAWN:	DWG NO.	REV
TJH	08-01175	C
SCALE NTS	DATE 11/09/10	SHEET 10 OF 15

LUIS R. LOMAS
LICENSE No. 62514
STATE OF FLORIDA
PROFESSIONAL ENGINEER

REVISIONS			
REV	DESCRIPTION	DATE	APPROVED
A	REVISED PER MD COMMENTS	06/13/2011	R.L.
B	ADDED GLAZING C & HOPPE HARDWARE	12/16/12	R.L.
C	REVISED PER MD COMMENTS	03/18/13	R.L.

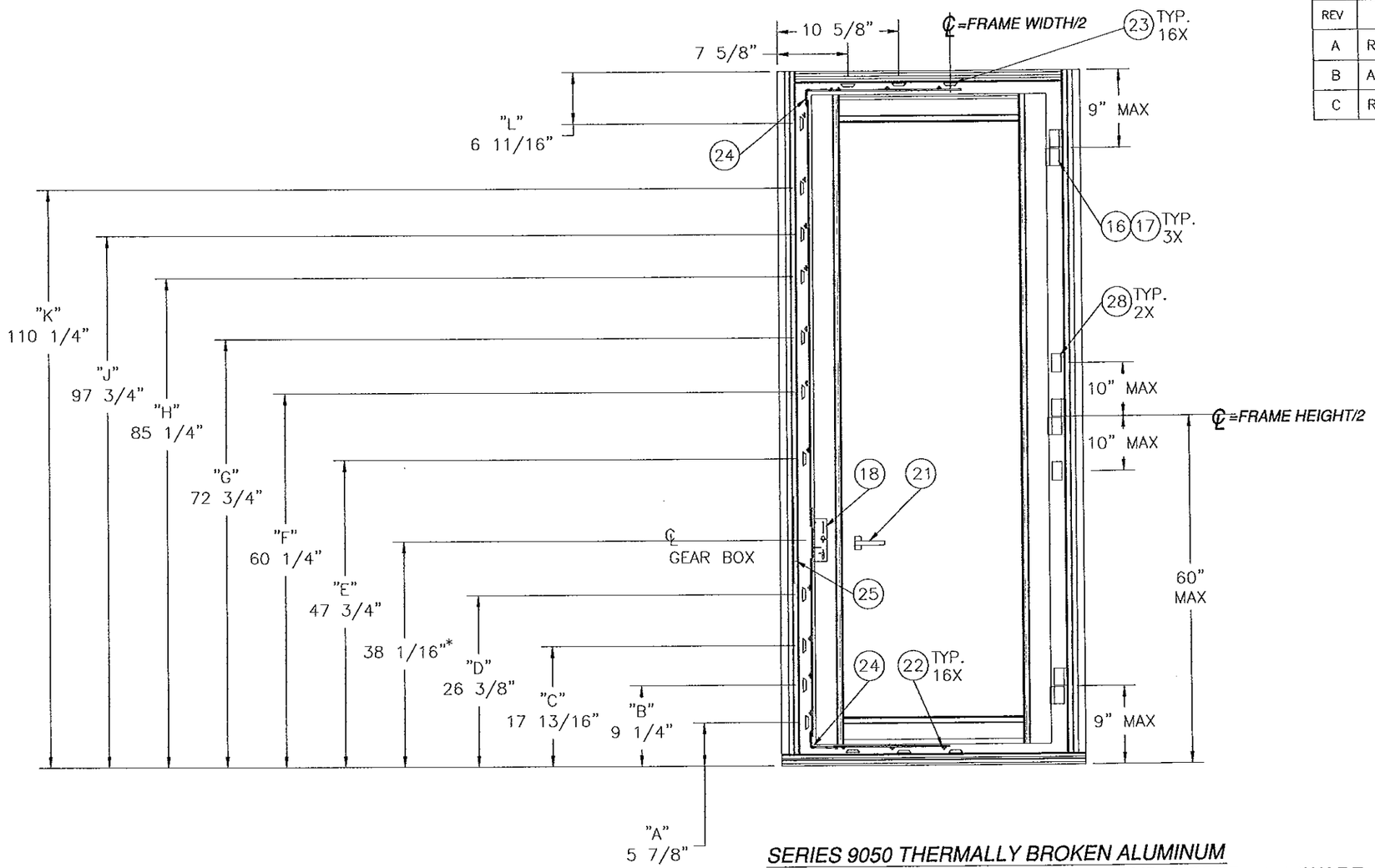

NOTE:
DIMENSIONS MARKED WITH * ARE CENTER OF LEVER ACTIVATED GEAR BOX. ALL OTHER DIMENSIONS ARE CENTER OF KEEPERS.

REQUIRED EUROGROOVE KEEPER LOCATION PER DOOR HEIGHT WITH STANDARD SILL:

80" HIGH = A THRU G AND L
84" HIGH = A THRU G AND L
96" HIGH = A THRU H AND L
108" HIGH = A THRU J AND L
120" HIGH = A THRU L

SERIES 9050 THERMALLY BROKEN ALUMINUM
INSWING TERRACE DOOR WITH STANDARD SILL AND GIESSE HARDWARE
EXTERIOR VIEW

SIGNED: 03/18/2013

PRODUCT REVISED
as complying with the Florida Building Code
Acceptance No 12-0628.03
Expiration Date 8/25/16
By [illegible]
Miami Dade Product Control

WinDoor INCORPORATED
7500 AMSTERDAM DRIVE
ORLANDO, FL 32832
Phone: 407.481.8400
Fax: 407.481.0505
www.windoorinc.com

SERIES 9050 THERMALLY BROKEN ALUMINUM
INSWING TERRACE DOOR - LMI
HARDWARE LAYOUT

DRAWN:	DWG NO.	REV
TJH	08-01175	C
SCALE NTS / DATE 11/09/10	SHEET 11 OF 15	

LUIS R. LOMAS LICENSE No. 62514 STATE OF FLORIDA PROFESSIONAL ENGINEER

REVISIONS			
REV	DESCRIPTION	DATE	APPROVED
A	REVISED PER MD COMMENTS	06/13/2011	R.L.
B	ADDED GLAZING C & HOPPE HARDWARE	12/16/12	R.L.
C	REVISED PER MD COMMENTS	03/18/13	R.L.

REQUIRED HOPPE HOOK LOCATION PER DOOR HEIGHT WITH STANDARD SILL:

80" HIGH = A AND B
84" HIGH = A AND B
96" HIGH = A, B AND C
108" HIGH = A, B AND C
120" HIGH = A, B AND C

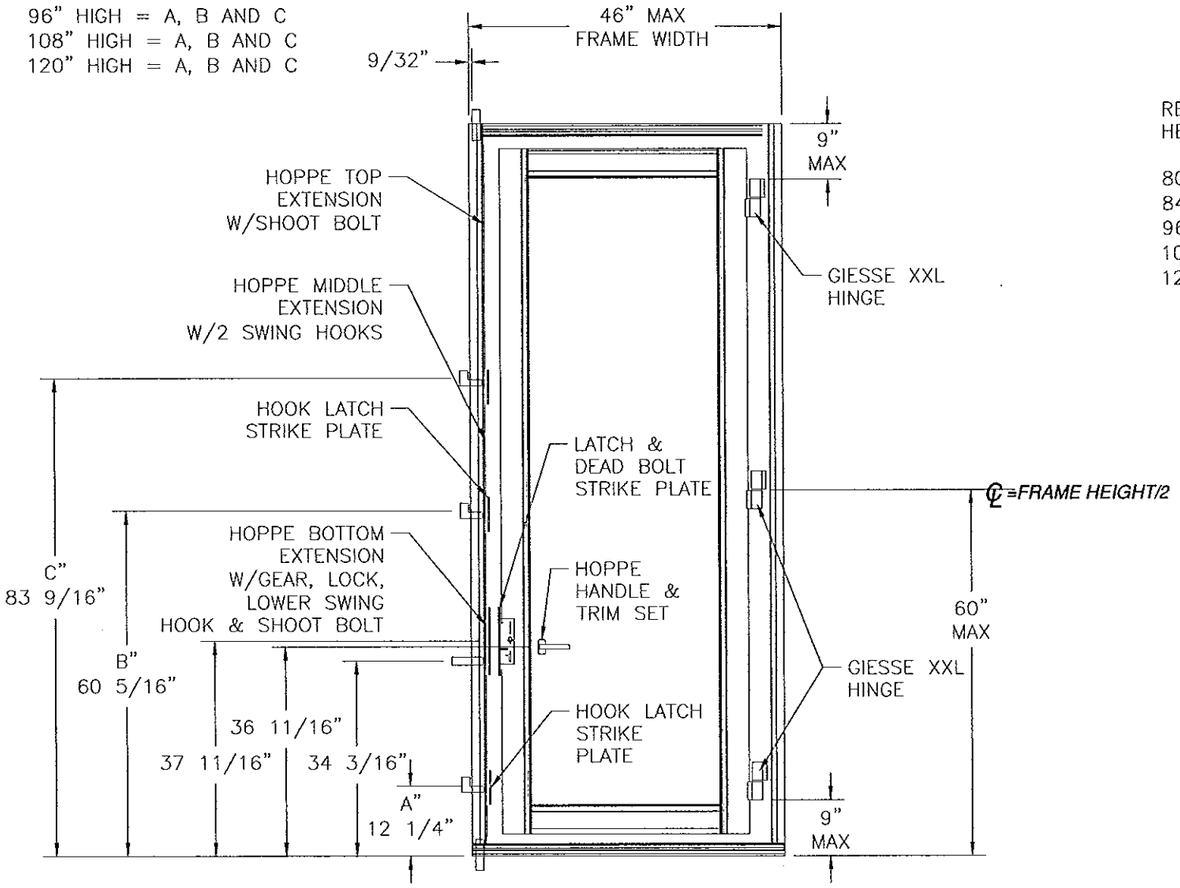

SERIES 9050 THERMALLY BROKEN ALUMINUM
INSWING TERRACE DOOR WITH STANDARD SILL AND HOPPE HARDWARE
EXTERIOR VIEW

REQUIRED HOPPE HOOK LOCATIONS PER DOOR HEIGHT WITH ADA SILL:

80" HIGH = A AND B
84" HIGH = A AND B
96" HIGH = A, B AND C
108" HIGH = A, B AND C
120" HIGH = A, B AND C

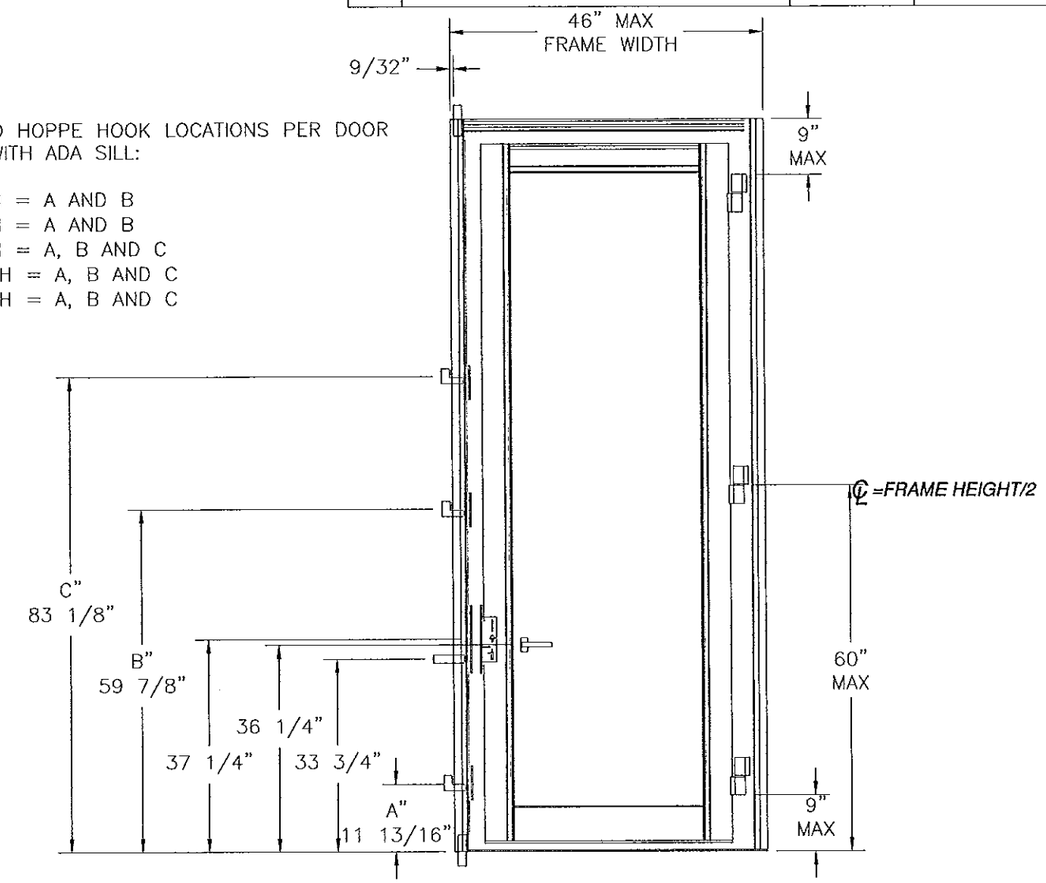

SERIES 9050 THERMALLY BROKEN ALUMINUM
INSWING TERRACE DOOR WITH ADA SILL AND HOPPE HARDWARE
EXTERIOR VIEW

SIGNED: 03/18/2013

PRODUCT REVIEWED
as complying with the Florida Building Code
Acceptance No. 12-0628.03
Expiration Date 8/25/16
By [illegible]
Miami Dade Product Control

WinDoor INCORPORATED
7500 AMSTERDAM DRIVE
ORLANDO, FL 32832
Phone: 407.481.8400
Fax: 407.481.0505
www.windoorinc.com

SERIES 9050 THERMALLY BROKEN ALUMINUM
INSWING TERRACE DOOR – LMI
HARDWARE LAYOUTS

DRAWN:	DWG NO.	REV
TJH	08-01175	C
SCALE NTS	DATE 11/09/10	SHEET 12 OF 15

LUIS R. LOMAS
LICENSE
No. 6251
STATE OF FLORIDA
PROFESSIONAL ENGINEER

REVISIONS			
REV	DESCRIPTION	DATE	APPROVED
A	REVISED PER MD COMMENTS	06/13/2011	R.L.
B	ADDED GLAZING C & HOPPE HARDWARE	12/16/12	R.L.
C	REVISED PER MD COMMENTS	03/18/13	R.L.

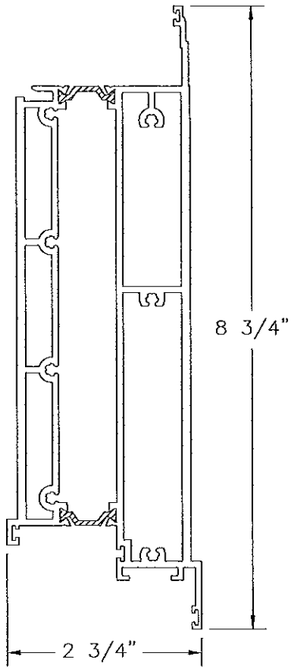

(9) TALL BOTTOM RAIL ASSEMBLY
EXTRUDED ALUMINUM 6063-T6 .090" THICK

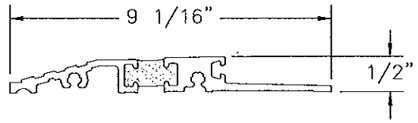

(3) ADA SILL ASSEMBLY
EXTRUDED ALUMINUM 6063-T6 .090" THICK
WITH POUR AND DEBRIDGE THERMAL BREAK

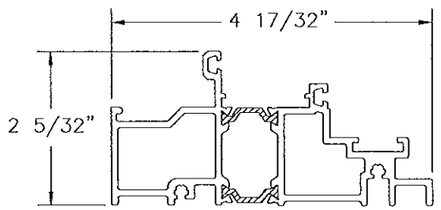

(2) FRAME HEAD & STANDARD SILL ASSEMBLY
EXTRUDED ALUMINUM 6063-T6 .090" THICK

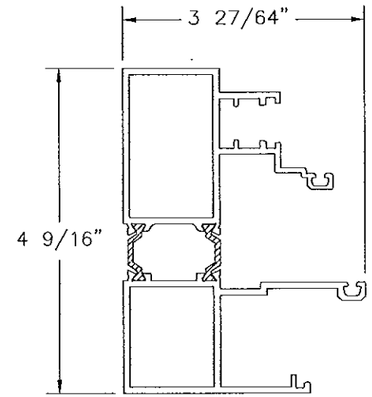

(1) FRAME JAMB ASSEMBLY
EXTRUDED ALUMINUM 6063-T6 .090" THICK

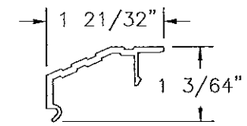

(13) STANDARD SILL COVER PLATE
EXTRUDED ALUMINUM 6063-T6 .090" THICK

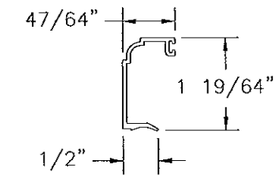

(14) GLASS STOP 1.25"
EXTRUDED ALUMINUM 6063-T6 .050" THICK

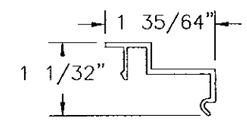

(12) JAMB & HEAD COVER PLATE
EXTRUDED ALUMINUM 6063-T6 .070" THICK

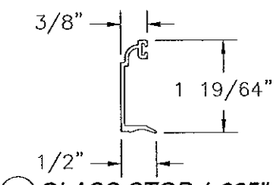

(4) GLASS STOP 1.625"
EXTRUDED ALUMINUM 6063-T6 .050" THICK
(TRIPLE GLAZED UNITS)

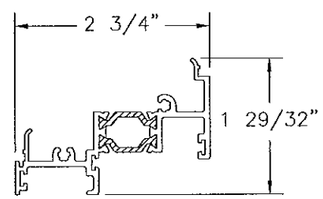

(10) ADA BOTTOM RAIL ADAPTER ASSEMBLY
EXTRUDED ALUMINUM 6063-T6 .080" THICK

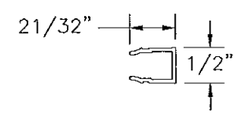

(11) EURO FRAME GROOVE COVER
EXTRUDED ALUMINUM 6063-T6 .050" THICK

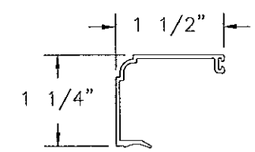

(6) GLAZING STOP 9/16"
ALUMINUM 6063-T6 .050" THICK

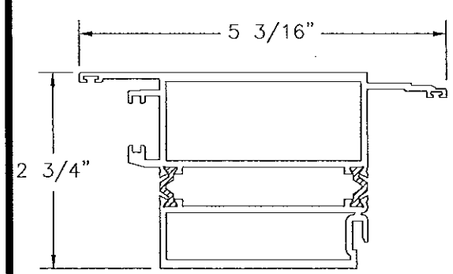

(5) STILE ASSEMBLY
EXTRUDED ALUMINUM 6063-T6 .090" THICK

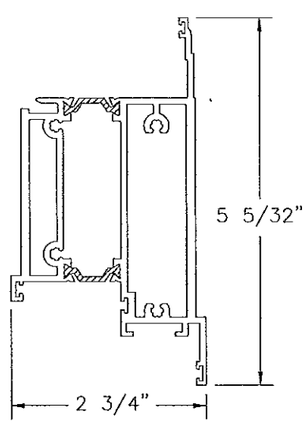

(7) TOP & BOTTOM RAIL ASSEMBLY
EXTRUDED ALUMINUM 6063-T6 .090" THICK

SIGNED: 03/18/2013

PRODUCT REVISED
as complying with the Florida
Building Code
Acceptance No. 12-0622.03
Expiration Date 8/25/14
By Ishaq I. Chand
Miami Dade Product Control

WinDoor INCORPORATED
7500 AMSTERDAM DRIVE
ORLANDO, FL 32832
Phone: 407.481.8400
Fax: 407.481.0505
www.windoorinc.com

SERIES 9050 THERMALLY BROKEN ALUMINUM
INSWING TERRACE DOOR – LMI
COMPONENTS

DRAWN:	DWG NO.	REV
TJH	08-01175	C
SCALE NTS	DATE 11/09/10	SHEET 13 OF 15

LUIS R. LOMAS
LICENSE
No. 6251
STATE OF FLORIDA
PROFESSIONAL ENGINEER

REVISIONS			
REV	DESCRIPTION	DATE	APPROVED
A	REVISED PER MD COMMENTS	06/13/2011	R.L.
B	ADDED GLAZING C & HOPPE HARDWARE	12/16/12	R.L.
C	REVISED PER MD COMMENTS	03/18/13	R.L.

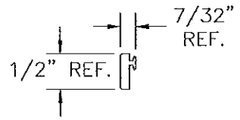

(41) FILLER STRIP
PVC 92 DUROMETER

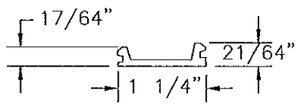

(38) STRUT COVER IS
EXTRUDED ALUMINUM 6063-T6 .090" THICK

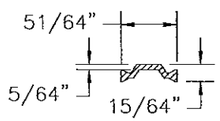

(8) 20mm STRUT
POLYMIDE 66
TENSILE STRENGTH 10,390 PSI

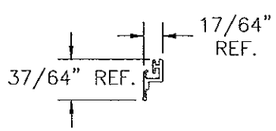

(40) FLEX COEX
BOTTOM SWEEP
RIGID PVC .050" THICK

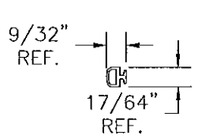

(35) STILE & RAIL FLANGE
WEATHERSTRIP

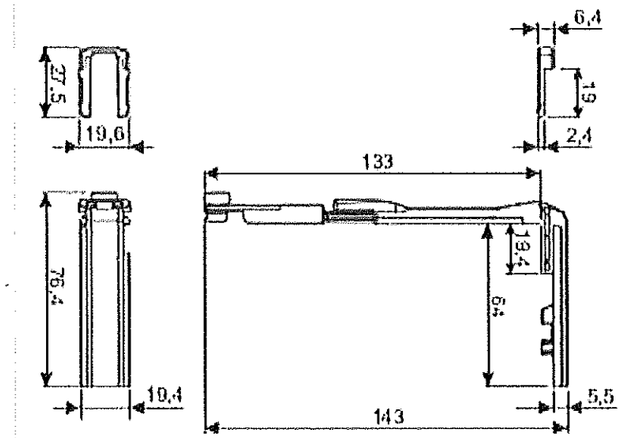

(24) CORNER DRIVE

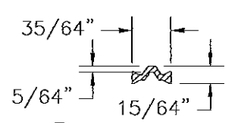

(29) 14mm STRUT
POLYMIDE 66
TENSILE STRENGTH MIN.: 10,390 PSI

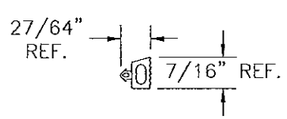

(37) SPONGE SEAL
EDPM

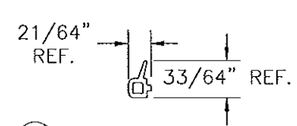

(36) TOP & BOTTOM
RAIL WEATHERSTRIP

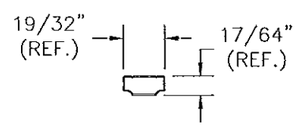

SINGLE IGU AIR SPACER
ALUMINUM ALLOY .015" THICK
BY HELMA

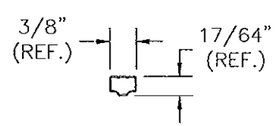

DOUBLE IGU AIR SPACER
ALUMINUM ALLOY .015" THICK
BY HELMA

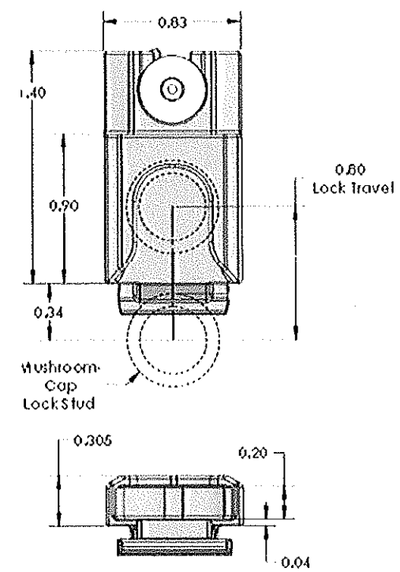

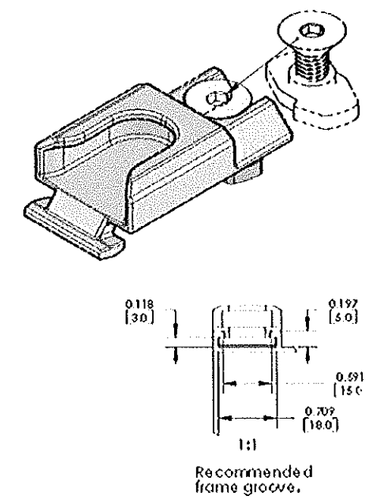

(23) EUROGROOVE KEEPERS

SIGNED: 03/18/2013

PRODUCT REVISED
as complying with the Florida
Building Code
Acceptance No. 12-0628.03
Expiration Date 8/25/16
By Shag L. Lomas
Miami Dade Product Control

WinDoor INCORPORATED
7500 AMSTERDAM DRIVE
ORLANDO, FL 32832
Phone: 407.481.8400
Fax: 407.481.0505
www.windoorinc.com

SERIES 9050 THERMALLY BROKEN ALUMINUM
INSWING TERRACE DOOR – LMI
COMPONENTS

DRAWN:	DWG NO.	REV
TJH	08-01175	C
SCALE NTS / DATE 11/09/10	SHEET 14 OF 15	

LUIS R. LOMAS
LICENSE
No. 62514
STATE OF
FLORIDA
PROFESSIONAL ENGINEER

REVISIONS			
REV	DESCRIPTION	DATE	APPROVED
A	REVISED PER MD COMMENTS	06/13/2011	R.L.
B	ADDED GLAZING C & HOPPE HARDWARE	12/16/12	R.L.
C	REVISED PER MD COMMENTS	03/18/13	R.L.

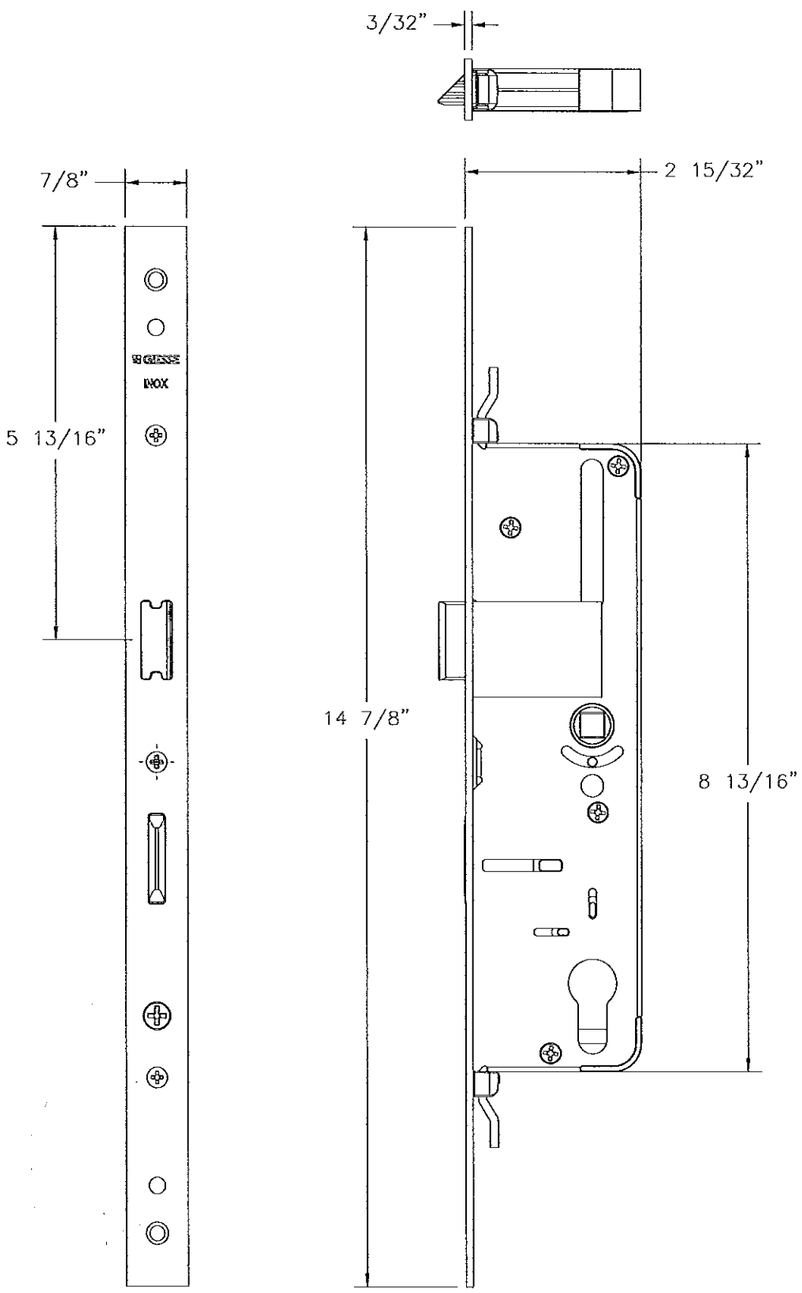

(18) LEVEL ACTIVATED GEAR BOX

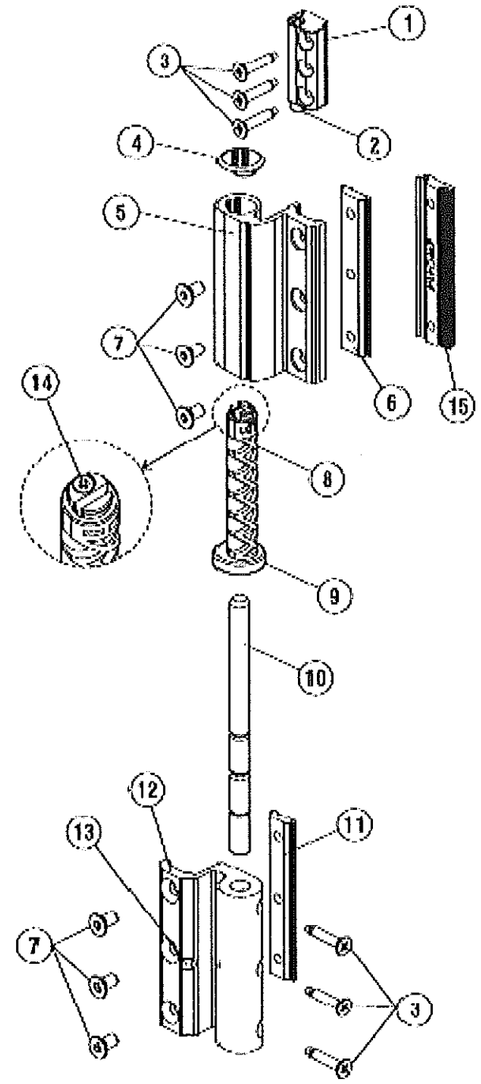

(16) FLASH XXL GIESSE DOOR HINGE

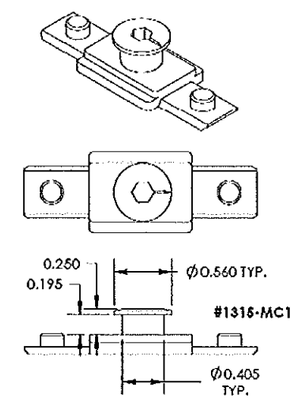

(22) LOCKING PLATES

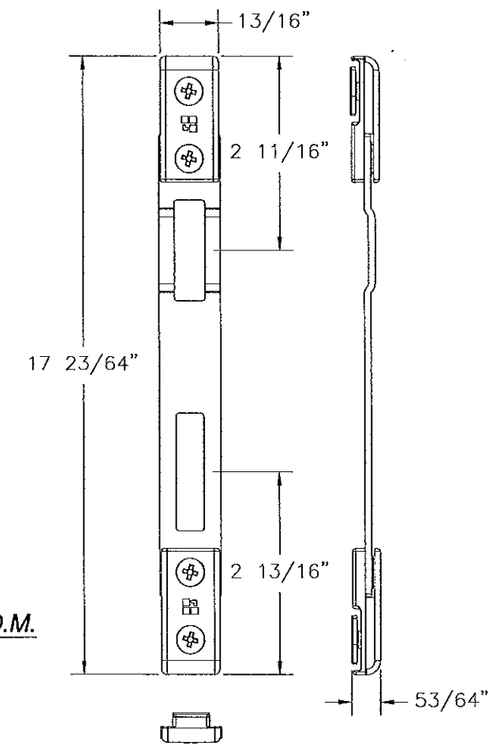

(18) STRIKE PLATE

INSWING DOOR GIESSE HINGE B.O.M.

1. HEIGHT ADJUSTMENT PLATE
2. GRUB SCREW FOR WING RAISING
3. #10 x 2" TEK SCREW
4. CAP
5. FM HINGE PART
6. FIXING PLATE FOR FM HINGE
7. FIXING SCREWS M6 x 12
8. ECCENTRIC BUSHING
9. BEARING
10. PIN
11. PLATE FOR MX HINGE FIXING
12. MX HINGE PART
13. GRUB SCREW FOR PIN LOCKING
14. GRUB SCREW FOR BUSHING BLOCKING
15. PRELOAD PLATE

SIGNED: 03/18/2013

PRODUCT REVISED
as complying with the Florida
Building Code
Acceptance No. 12-0628.03
Expiration Date Aug 25, 2016
By Ishan L. Chand
Related Date Product Control

WinDoor INCORPORATED
7500 AMSTERDAM DRIVE
ORLANDO, FL 32832
Phone: 407.481.8400
Fax: 407.481.0505
www.windoorinc.com

SERIES 9050 THERMALLY BROKEN ALUMINUM
INSWING TERRACE DOOR – LMI
COMPONENTS

DRAWN:	DWG NO.	REV
TJH	08-01175	C
SCALE NTS	DATE 11/09/10	SHEET 15 OF 15

LUIS R. LOMAS
LICENSE
No. 6251
STATE OF FLORIDA
PROFESSIONAL ENGINEER