MIAMI-DADE COUNTY

DEPARTMENT OF REGULATORY AND ECONOMIC RESOURCES (RER)
BOARD AND CODE ADMINISTRATION DIVISION

MIAMI-DADE COUNTY
PRODUCT CONTROL SECTION
11805 SW 26 Street, Room 208
Miami, Florida 33175-2474
T (786) 315-2590 F (786) 315-2599

NOTICE OF ACCEPTANCE (NOA)

Just Shutter It, Inc.
1608 SW Taurus Lane
Port Saint Lucie, Florida 34984

SCOPE:
This NOA is being issued under the applicable rules and regulations governing the use of construction materials. The documentation submitted has been reviewed and accepted by Miami-Dade County RER- Product Control Section to be used in Miami Dade County and other areas where allowed by the Authority Having Jurisdiction (AHJ).

This NOA shall not be valid after the expiration date stated below. The Miami-Dade County Product Control Section (In Miami Dade County) and/or the AHJ (in areas other than Miami Dade County) reserve the right to have this product or material tested for quality assurance purposes. If this product or material fails to perform in the accepted manner, the manufacturer will incur the expense of such testing and the AHJ may immediately revoke, modify, or suspend the use of such product or material within their jurisdiction. RER reserves the right to revoke this acceptance, if it is determined by Miami-Dade County Product Control Section that this product or material fails to meet the requirements of the applicable building code.

This product is approved as described herein, and has been designed to comply with the High Velocity Hurricane Zone of the Florida Building Code.

DESCRIPTION: Accordion Shutter with Aluminum or Polycarbonate Blades

APPROVAL DOCUMENT: Drawing No. 12-JUSTS-01, titled "Accordion Shutter with Aluminum or Polycarbonate Blades", sheets 1 through 11 of 11, prepared by Engineering Express, dated May 25, 2012, last revised on December 18, 2012, signed and sealed by Frank L. Bennardo, P.E., bearing the Miami-Dade County Product Control Approval stamp with the Notice of Acceptance number and the approval date by the Miami-Dade County Product Control Section.

MISSILE IMPACT RATING: Large and Small Missile Impact Resistant

LABELING: Each unit shall bear a permanent label with the manufacturer's name or logo, city, state, the following statement: "Miami-Dade County Product Control Approved", and NOA number, per TAS-201, TAS-202, and TAS-203, unless otherwise noted herein.

RENEWAL of this NOA shall be considered after a renewal application has been filed and there has been no change in the applicable building code negatively affecting the performance of this product.

TERMINATION of this NOA will occur after the expiration date or if there has been a revision or change in the materials, use, and/or manufacture of the product or process. Misuse of this NOA as an endorsement of any product, for sales, advertising or any other purposes shall automatically terminate this NOA. Failure to comply with any section of this NOA shall be cause for termination and removal of NOA.

ADVERTISEMENT: The NOA number preceded by the words Miami-Dade County, Florida, and followed by the expiration date may be displayed in advertising literature. If any portion of the NOA is displayed, then it shall be done in its entirety.

INSPECTION: A copy of this entire NOA shall be provided to the user by the manufacturer or its distributors and shall be available for inspection at the job site at the request of the Building Official.

This NOA consists of this page 1, evidence submitted page E-1 as well as approval document mentioned above. The submitted documentation was reviewed by **Helmy A. Makar, P.E., M.S.**

MIAMI-DADE COUNTY APPROVED

01/17/2013

NOA No. 12-0629.08
Expiration Date: 01/17/2018
Approval Date: 01/17/2013

Just Shutter It, Inc.

NOTICE OF ACCEPTANCE: EVIDENCE SUBMITTED

A. DRAWINGS

1. *Drawing No. 12-JUSTS-01, titled "Accordion Shutter with Aluminum or Polycarbonate Blades", sheets 1 through 11 of 11, prepared by Engineering Express, dated May 25, 2012, last revised on December 18, 2012, signed and sealed by Frank L. Bennardo, P.E.,.*

B. TESTS

1. *See Association's generic approval under 12-1528.*

C. CALCULATIONS

1. *See Association's generic approval under 12-1528.*

D. MATERIAL CERTIFICATIONS

1. *See Association's generic approval under 12-1528.*

E. STATEMENTS

1. *Release letter issued by Impact Technology, Inc., dated July 15, 2011, certifying this product to meet the criteria of product tested and approved, and allowing Just Shutter It, Inc. to use the test results approved under Miami-Dade County Approval No. 12-1528, signed by Nick Tarantino.*
2. *Acknowledgment letter by Just Shutter It, Inc., dated July 15, 2011, signed by Sam Zaza.*
3. *Letter by Engineering Express, dated May 25, 2012, certifying that the drawing (No. 12-JUSTS-01) prepared for Just Shutter It, Inc., signed and sealed by Frank L. Bennardo, P.E., is engineering wise identical to Impact Technology, Inc. Association generic drawing (No. 08-ITI-0001).*

Helmy A. Makar, P.E., M.S.
Product Control Unit Supervisor
NOA No. 12-0629.08
Expiration Date: 01/17/2018
Approval Date: 01/17/2013

ACCORDION SHUTTER
WITH ALUMINUM OR POLYCARBONATE BLADES

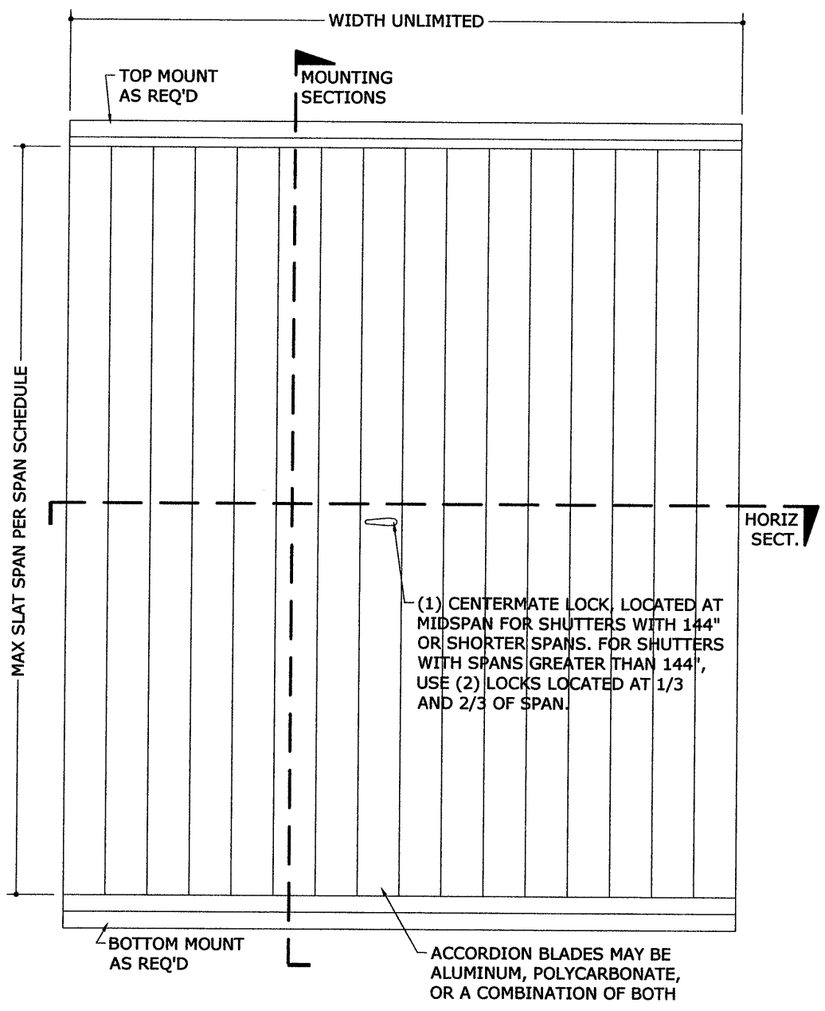

1 / 1 TYPICAL ELEVATION
N.T.S. EXTERIOR ELEV

ALLOWABLE SPAN SCHEDULE

SLAT SPAN	MAXIMUM ALLOWABLE DESIGN PRESSURES							
	STANDARD BLADES ONLY		LIGHTWEIGHT BLADES OR LIGHTWEIGHT/WINDOW BLADE COMBINATION*		WINDOW BLADES OR STANDARD/ WINDOW BLADE COMBINATION*		SHUTTER WITH STANDARD BLADES AND ONE SINGLE WINDOW BLADE**	
72"	+ 152.5 PSF	- 152.5 PSF	+ 75.0 PSF	- 75.0 PSF	+ 93.6 PSF	- 93.6 PSF	+ 93.6 PSF	- 93.6 PSF
90"	+ 117.8 PSF	- 117.8 PSF	+ 75.0 PSF	- 75.0 PSF	+ 93.6 PSF	- 93.6 PSF	+ 93.6 PSF	- 93.6 PSF
108"	+ 100.5 PSF	- 100.5 PSF	+ 75.0 PSF	- 75.0 PSF	+ 93.6 PSF	- 93.6 PSF	+ 93.6 PSF	- 93.6 PSF
126"	+ 61.2 PSF	- 76.2 PSF					+ 42.4 PSF	- 62.4 PSF
144"	+ 42.4 PSF	- 62.4 PSF					+ 42.4 PSF	- 62.4 PSF
162"	+ 25.5 PSF	- 41.6 PSF					+ 25.5 PSF	- 41.6 PSF

SPAN SCHEDULE NOTES:

1. PRESSURES SHOWN IN "ALLOWABLE SPAN SCHEDULE" ARE MAXIMUM ALLOWABLE DESIGN PRESSURES AT EACH RESPECTIVE SHUTTER SPAN.
2. * APPLICABLE FOR INSTALLATIONS UTILIZING ONE OR MORE WINDOW BLADES.
3. ** ONLY APPLICABLE FOR INSTALLATIONS WITH ONE SINGLE WINDOW BLADE SLAT, AND THE REMAINDER OF BLADES STANDARD.

MINIMUM GLASS SEPARATION

SPAN LESS THAN:	STANDARD BLADES ONLY		LIGHTWEIGHT BLADES OR LIGHTWEIGHT/WINDOW BLADE COMBINATION*		WINDOW BLADES OR STANDARD/ WINDOW BLADE COMBINATION*		SHUTTER WITH STANDARD BLADES AND ONE SINGLE WINDOW BLADE**	
	INSTALLATIONS 30' ABOVE GRADE OR LESS	INSTALLATIONS MORE THAN 30' ABOVE GRADE	INSTALLATIONS 30' ABOVE GRADE OR LESS	INSTALLATIONS MORE THAN 30' ABOVE GRADE	INSTALLATIONS 30' ABOVE GRADE OR LESS	INSTALLATIONS MORE THAN 30' ABOVE GRADE	INSTALLATIONS 30' ABOVE GRADE OR LESS	INSTALLATIONS MORE THAN 30' ABOVE GRADE
72"	1.88"	1.88"	2.60"	2.50"	2.63"	2.63"	4.50"	3.00"
90"	2.13"	2.13"	2.60"	2.50"	2.63"	2.63"	4.50"	3.00"
108"	2.88"	2.78"	2.60"	2.50"	2.63"	2.63"	4.50"	3.00"
126"	3.63"	3.00"					4.50"	3.00"
144"	4.50"	3.00"					4.50"	3.25"
162"	4.50"	3.00"					4.50"	3.25"

GLASS SEPARATION SCHEDULE NOTES:

1. SEPARATION FROM GLAZING SHALL BE MEASURED FROM THE PROTECTED FENESTRATION PRODUCT TO THE NEAREST POINT ON THE INTERIOR SIDE OF THE SHUTTER, WHICH MAY BE THE BLADE, CENTERMATE, OR LOCKING DEVICE.
2. * APPLICABLE FOR INSTALLATIONS UTILIZING ONE OR MORE WINDOW BLADES.
3. ** ONLY APPLICABLE FOR INSTALLATIONS WITH ONE SINGLE WINDOW BLADE SLAT, AND THE REMAINDER OF BLADES ALUMINUM.

GENERAL NOTES

1. THE SYSTEM DESCRIBED HEREIN HAS BEEN DESIGNED AND TESTED IN ACCORDANCE WITH THE 2010 EDITION OF THE FLORIDA BUILDING CODE, FOR USE WITHIN AND OUTSIDE THE HIGH VELOCITY HURRICANE ZONE, PER TAS 201 / 202 / 203.
2. NO 33-1/3% INCREASE IN ALLOWABLE STRESS HAS BEEN USED IN THE DESIGN OF THIS SYSTEM. WIND LOAD DURATION FACTOR Cd=1.6 HAS BEEN USED FOR WOOD ANCHOR DESIGN.
3. POSITIVE AND NEGATIVE DESIGN PRESSURES CALCULATED FOR USE WITH THIS SYSTEM SHALL BE DETERMINED PER SEPARATE ENGINEERING IN ACCORDANCE WITH THE GOVERNING CODE. PRESSURE REQUIREMENTS AS DETERMINED IN ACCORDANCE WITH ASCE 7-10 AND CHAPTER 1609 OF THE 2010 FLORIDA BUILDING CODE SHALL BE LESS THAN OR EQUAL TO THE POSITIVE OR NEGATIVE DESIGN PRESSURE CAPACITY VALUES LISTED HEREIN FOR ANY ASSEMBLY AS SHOWN.
4. DESIGN PRESSURES NOTED HEREIN ARE BASED ON MAXIMUM TESTED PRESSURES DIVIDED BY A 1.5 SAFETY FACTOR.
5. ALL POLYCARBONATE PANELS SHALL BE EXTRUDED WITH THICKNESS t=0.090" AND SHALL BE FABRICATED FROM 100% SABIC INNOVATIVE PLASTICS THERMOPLASTIC POLYMER LEXAN SHEET #XL10 2UV (UV STABILIZED), AS APPROVED UNDER MIAMI-DADE COUNTY NOTICE OF ACCEPTANCE #08-0305.02.
6. THE SYSTEM DETAILED HEREIN IS GENERIC AND DOES NOT PROVIDE INFORMATION FOR A SPECIFIC SITE. FOR SITE CONDITIONS DIFFERENT FROM THE CONDITIONS DETAILED HEREIN, A LICENSED ENGINEER OR REGISTERED ARCHITECT SHALL PREPARE SITE SPECIFIC DOCUMENTS FOR USE IN CONJUNCTION WITH THIS DOCUMENT.
7. PERMIT HOLDER SHALL VERIFY THE ADEQUACY OF THE EXISTING STRUCTURE TO WITHSTAND SUPERIMPOSED LOADS. WOOD BUCKS (BY OTHERS) SHALL BE ANCHORED PROPERLY TO TRANSFER LOADS TO THE EXISTING STRUCTURE.
8. ALL EXTRUSIONS SHALL BE 6063-T6 ALUMINUM ALLOY, UNLESS NOTED OTHERWISE. EACH SHUTTER ASSEMBLY SHALL BE PERMANENTLY LABELED WITH THE FOLLOWING MINIMUM INFORMATION:
   JUST SHUTTER IT INC.
   PORT SAINT LUCIE, FL
   TAS 201, 202, 203
   MIAMI-DADE NOA NUMBER
   THIS IS THE MINIMUM LABEL INFORMATION, ACTUAL PRODUCT LABELS SHALL COMPLY WITH ALL REQUIREMENTS OF THE FLORIDA BUILDING CODE, INCLUDING THE PROVISIONS FOR THE HIGH VELOCITY HURRICANE ZONE (HVHZ).
9. TOP & BOTTOM DETAILS SHOWN MAY BE INTERCHANGED AS FIELD CONDITIONS DICTATE.
10. ALL BOLTS & WASHERS SHALL BE ZINC COATED STEEL, GALVANIZED STEEL, OR STAINLESS STEEL WITH A MINIMUM TENSILE YIELD STRENGTH OF 60 KSI. ALL 3/16"Ø OR 1/4"Ø POP RIVETS SHALL BE 5056-H32 ALUMINUM ALLOY OR STRONGER.
11. ALL STEEL IN CONTACT WITH ALUMINUM SHALL BE PAINTED OR PLATED.
12. WALL HEADERS #10, 13, 38 AND 39 AS SHOWN HEREIN MAY BE MOUNTED ON THE INTERIOR OR EXTERIOR OF AN OPENING.

Approved as complying with the Florida Building Code
Date 01/17/2013
NOA#12-0629.08
Miami Dade Product Control
By

FRANK L. BENNARDO
LICENSE
No. 56779
STATE OF FLORIDA
PROFESSIONAL ENGINEER
12/18/2012

FRANK L. BENNARDO, P.E.
PE0056779
ENGINEERING EXPRESS
160 SW 12th AVENUE #206
DEERFIELD BEACH, FL 33442
Ph: (954) 354-0660 FAX: (954) 354-0673
WWW.ENGEXP.COM
CERT OF AUTH #8986
A. FRANK L. BENNARDO, P.E., INC. INNOVATION ENGINEERED

JUST SHUTTER IT INC.
1608 SW TAURUS LANE
PORT SAINT LUCIE, FL 34984

ACCORDION SHUTTER
WITH ALUMINUM OR POLYCARBONATE BLADES
MIAMI-DADE NOTICE OF ACCEPTANCE

REMARKS	DRWN	CHKD	DATE
INIT ISSUE	KL	FLB	06/25/12
REV. PER COMMENTS	KL	FLB	12/18/12

12-JUSTS-01
SCALE: - 01
PAGE DESCRIPTION:
-
-

11

1

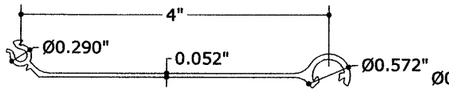

1 STANDARD BLADE
N.T.S. 6063-T6

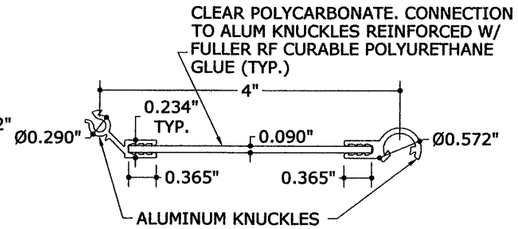

2 WINDOW BLADE
N.T.S. 6063-T6/POLYCARBONATE

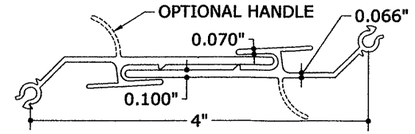

3 HERMAPHRODITIC CENTERMATE
N.T.S. 6063-T6

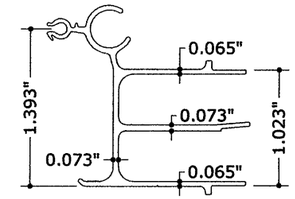

4 MALE CENTERMATE
N.T.S. 6063-T6

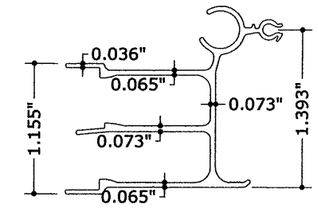

5 FEMALE CENTERMATE
N.T.S. 6063-T6

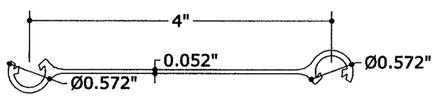

6 BLADE ADAPTER
N.T.S. 6063-T6

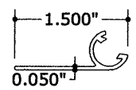

8 FLAT STARTER BLADE
N.T.S. 6063-T6

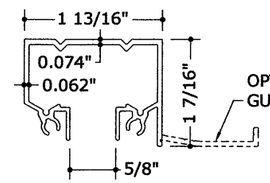

9 CEILING HEADER
N.T.S. 6063-T6

Approved as complying with the Florida Building Code
Date 01/17/2013
NOA# 12-0629.08
Miami Dade Product Control
By

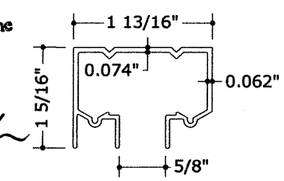

37 ALT. CEILING HEADER
N.T.S. 6063-T6

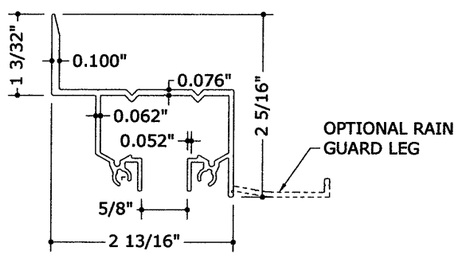

10 WALL HEADER
N.T.S. 6063-T6

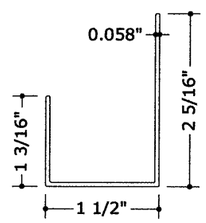

11 ADJUSTABLE SILL TRACK BOTTOM
N.T.S. 6063-T6

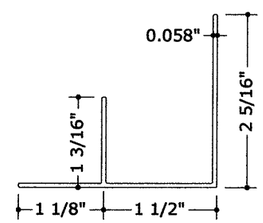

12 ALT. ADJUSTABLE SILL TRACK BOTTOM
N.T.S. 6063-T6

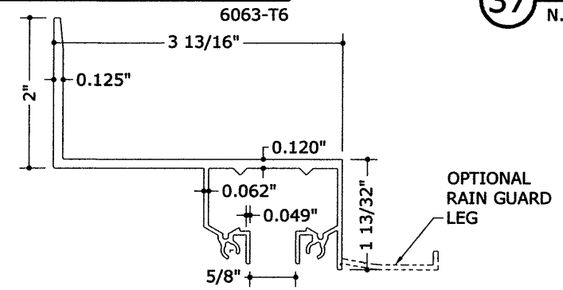

13 BUILD-OUT WALL HEADER
N.T.S. 6063-T6

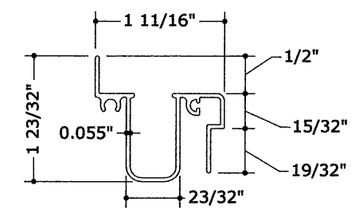

14 ADJUSTABLE SILL TRACK TOP
N.T.S. 6063-T6

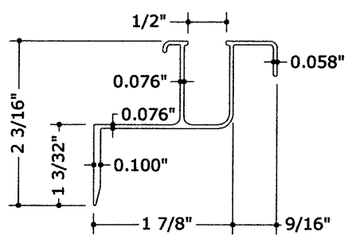

15 WALL SILL TRACK
N.T.S. 6063-T6

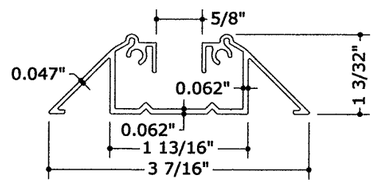

16 WALKOVER TRACK
N.T.S. 6063-T6

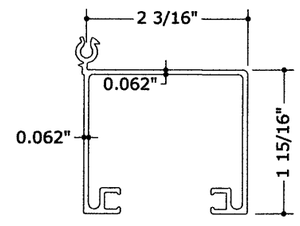

29 HIGH IMPACT CENTERMATE
N.T.S. 6063-T6

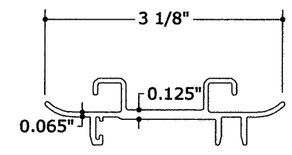

30 HIGH IMPACT CENTERMATE INSERT
N.T.S. 6063-T6

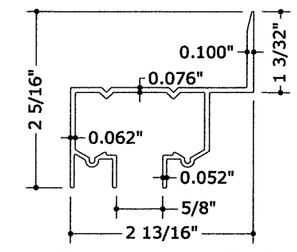

38 ALT. WALL HEADER
N.T.S. 6063-T6

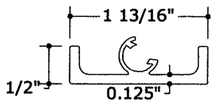

31 CEILING SIDE MOUNT
N.T.S. 6063-T6

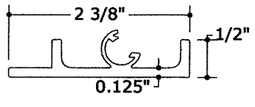

32 HEADER SIDE MOUNT
N.T.S. 6063-T6

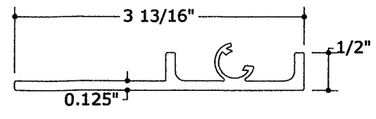

33 BUILD-OUT HEADER SIDE MOUNT
N.T.S. 6063-T6

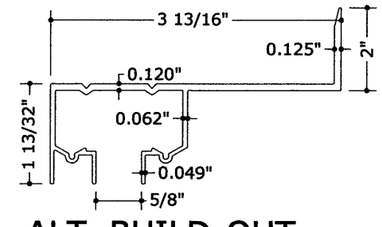

39 ALT. BUILD-OUT WALL HEADER
N.T.S. 6063-T6

FRANK L. BENNARDO, P.E.
46649
12/18/2012
STATE OF FLORIDA
PROFESSIONAL ENGINEER

ENGINEERING EXPRESS
160 SW 12th AVENUE, #304
DEERFIELD BEACH, FL 33442
Ph: (954) 354-0660 Fax: (954) 354-0673
WWW.ENGEXP.COM
CERT OF AUTH #9985
A. FRANK L. BENNARDO, P.E., INC. INNOVATION

JUST SHUTTER IT INC.
1608 SW TAURUS LANE
PORT SAINT LUCIE, FL 34984

ACCORDION SHUTTER
WITH ALUMINUM OR POLYCARBONATE BLADES
MIAMI-DADE NOTICE OF ACCEPTANCE

REMARKS	DRWN	CHKD	DATE
INIT ISSUE	KL	FLB	05/25/12
REV. PER COMMENTS	KL	FLB	12/18/12

12-JUSTS-01
SCALE: - 01
PAGE DESCRIPTION:
-
-

11

2

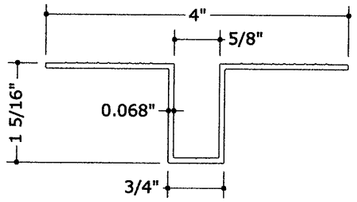

17 RECESSED TRACK
N.T.S. 6063-T5

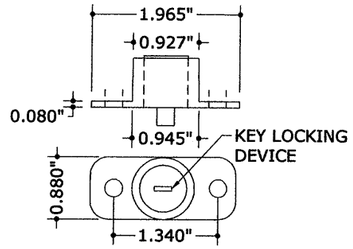

18 PUSH-BUTTON LOCK
N.T.S. 6063-T5

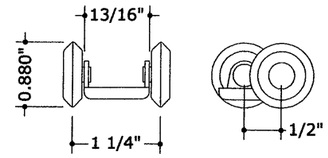

19 WHEEL CARRIAGE
N.T.S. NYLON/STAINLESS STEEL

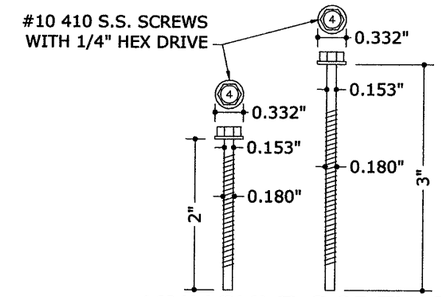

20 KNUCKLE SCREWS
N.T.S. STAINLESS STEEL

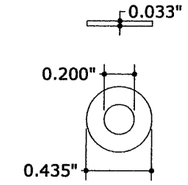

21 WASHER
N.T.S. STAINLESS STEEL

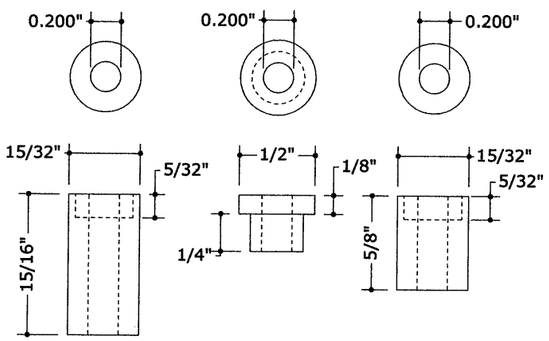

22 NYLON BUSHINGS
N.T.S. NYLON

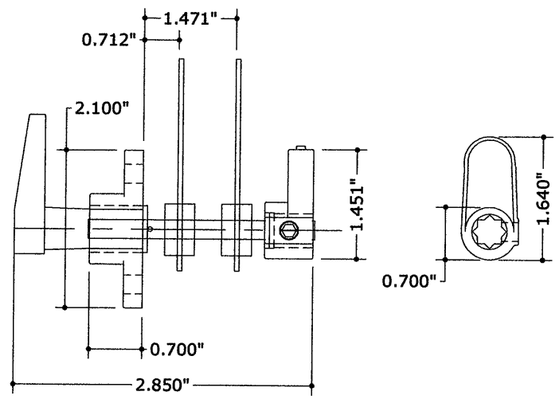

23 LOCK ASSEMBLY
N.T.S. ZINC ALOXY/STAINLESS STEEL

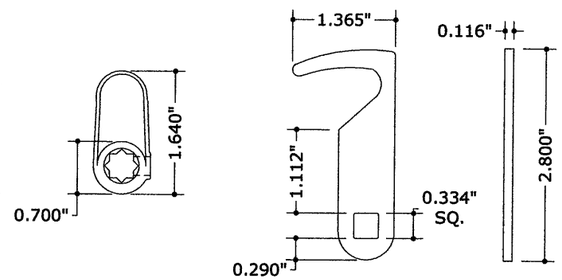

24 LOCKING ARM
N.T.S. 410 STAINLESS STEEL

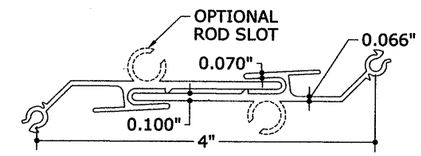

40 ALT. HERMAPHRODITIC CENTERMATE
N.T.S. 6063-T6

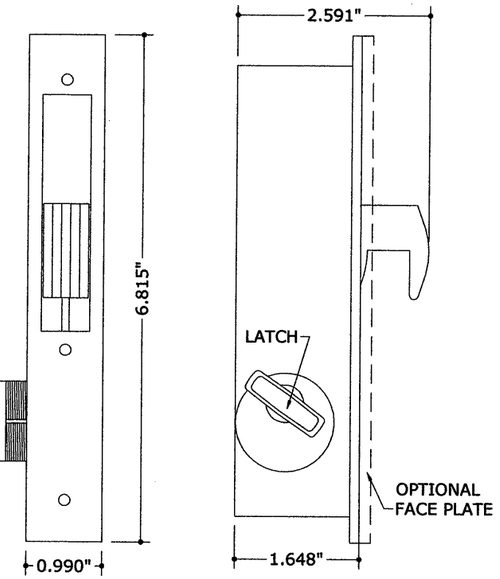

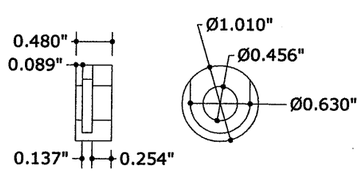

25 LEFT LOCKING ARM BUSHING
N.T.S. NYLON

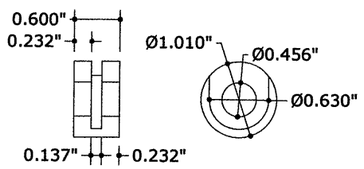

26 RIGHT LOCKING ARM BUSHING
N.T.S. NYLON

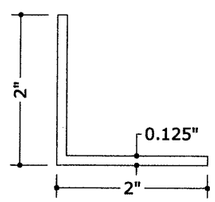

35 2"x2"x0.125" ANGLE
N.T.S. 6063-T6

Approved as complying with the Florida Building Code
Date 01/17/2013
NOA# 12-0629.08
Miami Dade Product Control
By

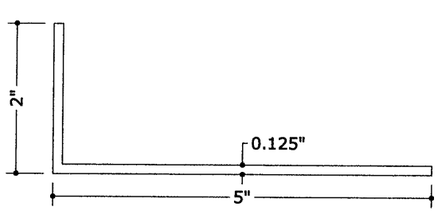

27 2"x5"x0.125" ANGLE
N.T.S. 6063-T6

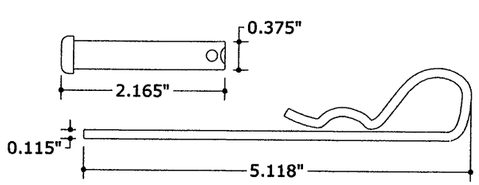

28 CLEVIS AND PIN
N.T.S. CADMIUM PLATED STEEL

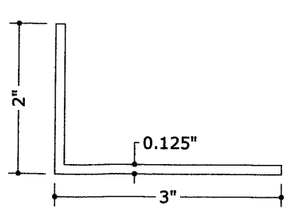

36 2"x3"x0.125" ANGLE
N.T.S. 6063-T6

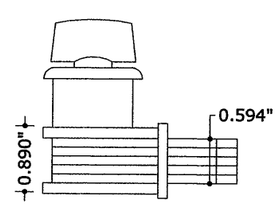

34 HOOK BOLT DEAD LOCK
N.T.S. ALUMINUM

FRANK L. BENNARDO, P.E.
#P50006549
No. 46549
12/18/2012
STATE OF FLORIDA
PROFESSIONAL ENGINEER

ENGINEERING EXPRESS
160 SW 12th AVENUE, #1
DEERFIELD BEACH, FL 34
Ph: (954) 354-0660 Fax: (954) 354-0
WWW.ENGEXP.COM
CERT OF AUTH #9886
A FRANK L. BENNARDO, P.E., INC. INNOVATION

JUST SHUTTER IT INC.
1608 SW TAURUS LANE
PORT SAINT LUCIE, FL 34984

ACCORDION SHUTTER
WITH ALUMINUM OR POLYCARBONATE BLADES
MIAMI-DADE NOTICE OF ACCEPTANCE

REMARKS	DRWN	CHKD	DATE
INIT ISSUE	KL	FLB	05/25/12
REV. PER COMMENTS	KL	FLB	12/18/12

12-JUSTS-01
SCALE: - 01
PAGE DESCRIPTION:
-
-

11

3

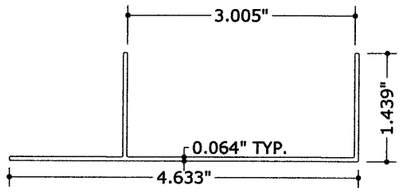

41 ALT. ADJUSTABLE SILL TRACK BOTTOM

N.T.S. 6063-T6

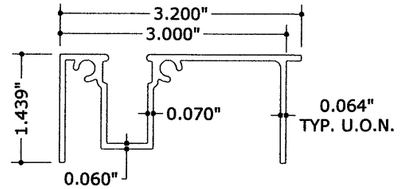

42 ALT. ADJUSTABLE SILL TRACK TOP

N.T.S. 6063-T6

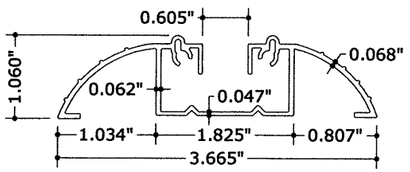

43 ALT. WALKOVER TRACK

N.T.S. 6063-T6

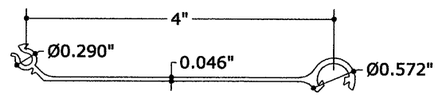

44 LIGHTWEIGHT BLADE

N.T.S. 6063-T6

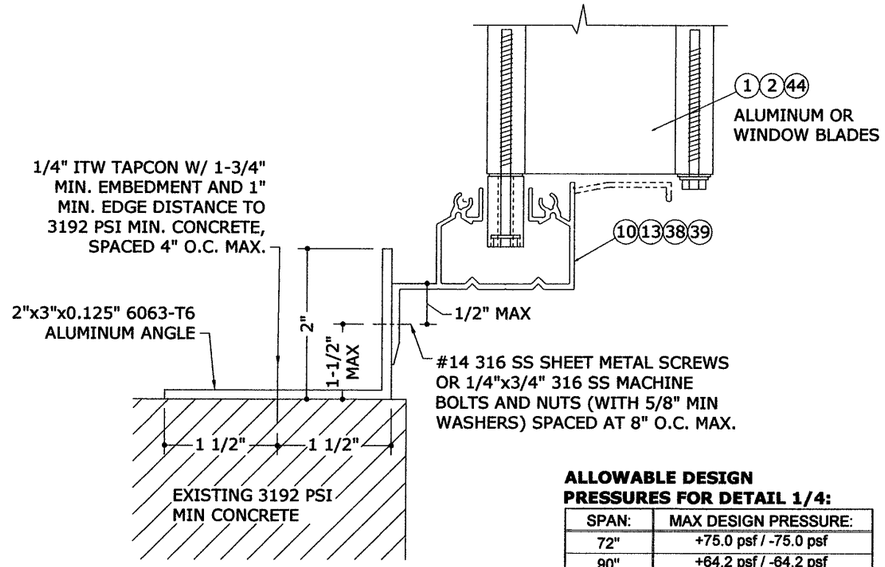

NOTE: MAXIMUM ALLOWABLE SPANS AND DESIGN PRESSURES FOR THIS MOUNTING CONDITION PER TABLE BELOW.

ALLOWABLE DESIGN PRESSURES FOR DETAIL 1/4:

SPAN:	MAX DESIGN PRESSURE:
72"	+75.0 psf / -75.0 psf
90"	+64.2 psf / -64.2 psf
108"	+53.5 psf / -53.5 psf
126"	+42.4 psf / -45.9 psf
144"	+40.1 psf / -40.1 psf

1/4 BUILD-UP WALL MOUNT

N.T.S. VERT SECTION

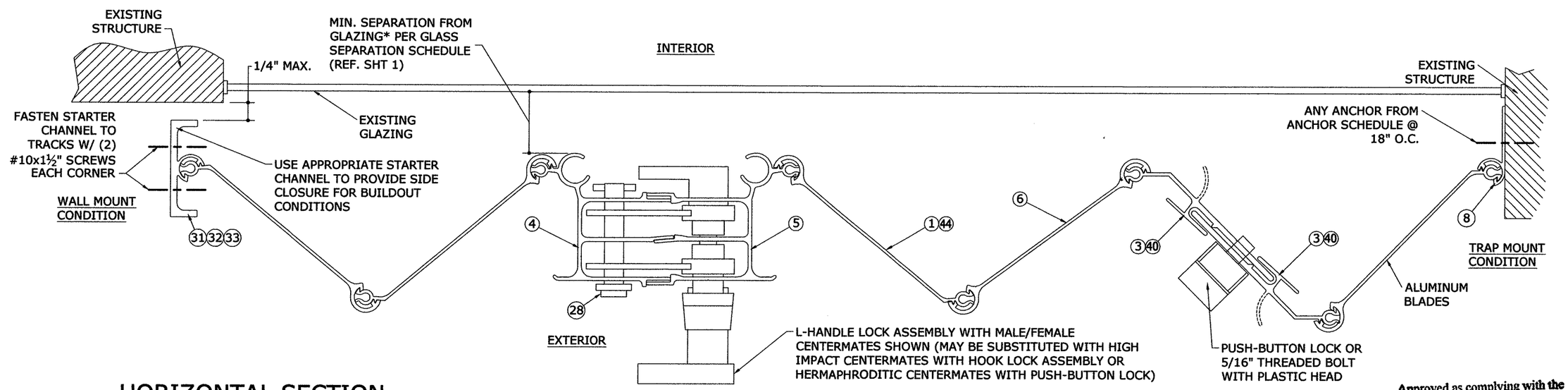

2/4 HORIZONTAL SECTION W/ FLOATING STACK

N.T.S. HORIZ SECTION

***NOTE**: SEPARATION FROM GLAZING SHALL BE MEASURED FROM THE PROTECTED FENESTRATION PRODUCT TO THE NEAREST POINT ON THE INTERIOR SIDE OF THE SHUTTER, WHICH MAY BE THE BLADE, CENTERMATE, OR LOCKING DEVICE.

Approved as complying with the Florida Building Code
Date 01/17/2013
NOA# 12-0629.08
Miami Dade Product Control
By

FRANK L. BENNARDO, P.E.
FE0046949
STATE OF FLORIDA
12/18/2012
ENGINEERING EXPRESS
160 SW 12th AVENUE, #340
DEERFIELD BEACH, FL 33442
PH: (954) 354-0660 FAX: (954) 354-0673
WWW.ENGEXP.COM
CERT OF AUTH #9885
A. FRANK L. BENNARDO, P.E., INC. INNOVATION ENGINEER

JUST SHUTTER IT INC.
1608 SW TAURUS LANE
PORT SAINT LUCIE, FL 34984

ACCORDION SHUTTER
WITH ALUMINUM OR POLYCARBONATE BLADES
MIAMI-DADE NOTICE OF ACCEPTANCE

REMARKS	DRWN	CHKD	DATE
INIT ISSUE	KL	FLB	05/25/12
REV. PER COMMENTS	KL	FLB	12/18/12

12-JUSTS-01

SCALE: - 01

PAGE DESCRIPTION:
-
-

11

4

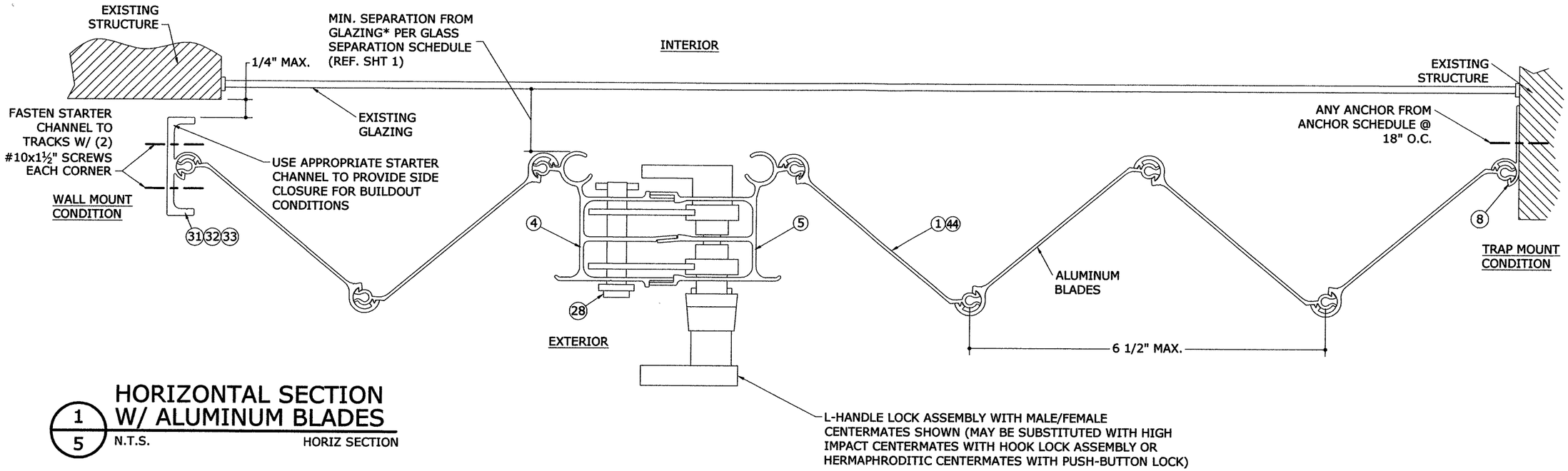

1/5 HORIZONTAL SECTION W/ ALUMINUM BLADES

N.T.S. HORIZ SECTION

***NOTE**: SEPARATION FROM GLAZING SHALL BE MEASURED FROM THE PROTECTED FENESTRATION PRODUCT TO THE NEAREST POINT ON THE INTERIOR SIDE OF THE SHUTTER, WHICH MAY BE THE BLADE, CENTERMATE, OR LOCKING DEVICE.

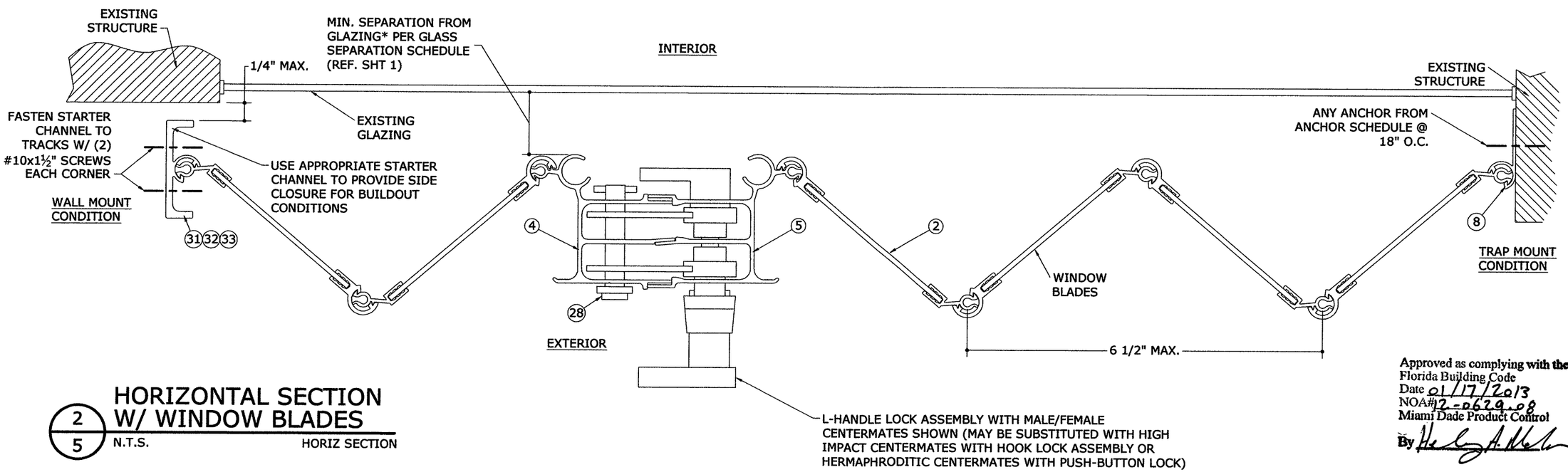

2/5 HORIZONTAL SECTION W/ WINDOW BLADES

N.T.S. HORIZ SECTION

Approved as complying with the Florida Building Code
Date 01/17/2013
NOA# 12-0629.08
Miami Dade Product Control
By

FRANK L. BENNARDO, P.E.
LIC # RE0046549
No. 46549
12/18/2012
STATE OF FLORIDA
PROFESSIONAL ENGINEER

ENGINEER EXPRESS
160 SW 12th AVENUE, #104
DEERFIELD BEACH, FL 33442
Ph: (954) 354-0660 Fax: (954) 354-0504
WWW.ENGEXP.COM
CERT OF AUTH #9885
A FRANK L. BENNARDO, P.E., INC. INNOVATION

JUST SHUTTER IT INC.
1608 SW TAURUS LANE
PORT SAINT LUCIE, FL 34984

ACCORDION SHUTTER
WITH ALUMINUM OR POLYCARBONATE BLADES
MIAMI-DADE NOTICE OF ACCEPTANCE

REMARKS	DRWN	CHKD	DATE
INIT ISSUE	KL	FLB	05/25/12
REV. PER COMMENTS	KL	FLB	12/18/12

12-JUSTS-01

SCALE: - 01

PAGE DESCRIPTION:
-
-

11

5

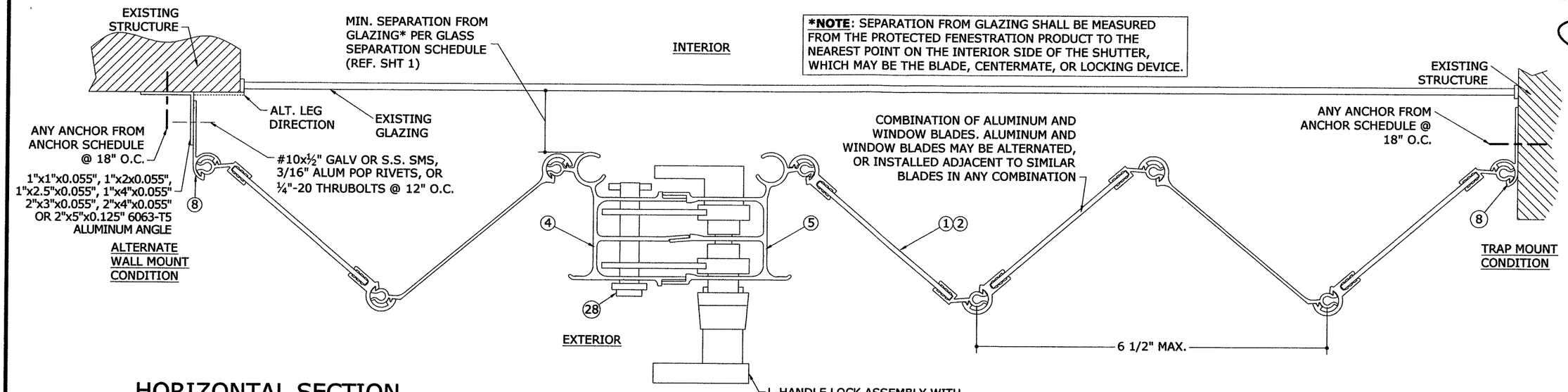

1/6 HORIZONTAL SECTION W/ COMBINATION BLADES

N.T.S. HORIZ SECTION

NOTE: LOCKS MAY BE MOUNTED ON INTERIOR OR EXTERIOR SIDE OF SHUTTER.

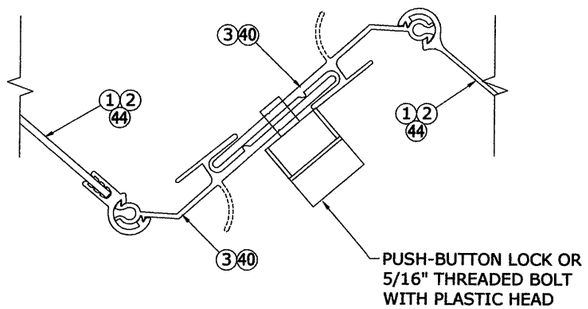

2/6 ALT. HERMAPHRODITIC CENTERMATE

N.T.S. HORIZ SECTION

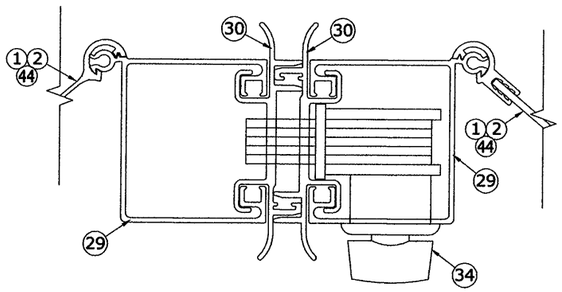

3/6 ALT. HIGH IMPACT CENTERMATE

N.T.S. HORIZ SECTION

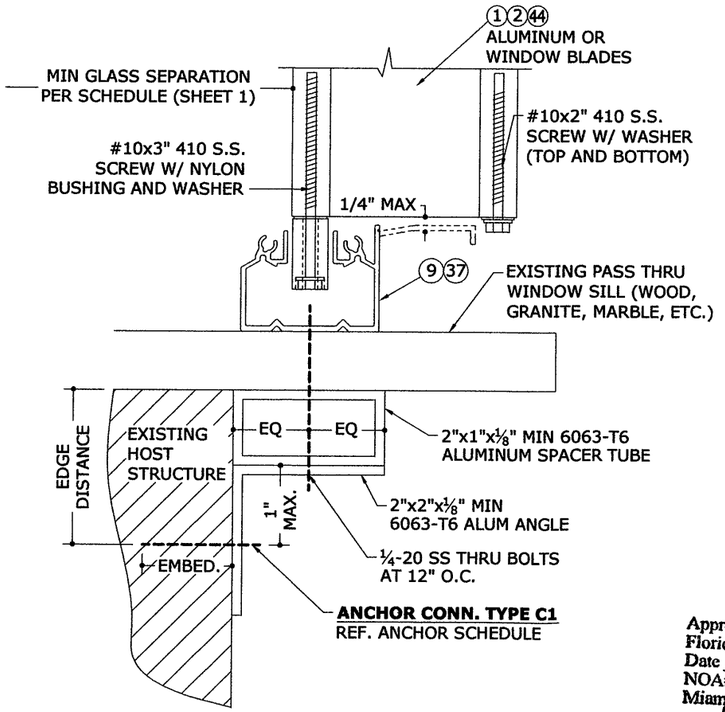

4/6 PASS THRU WINDOW DETAIL

N.T.S. VERT SECTION

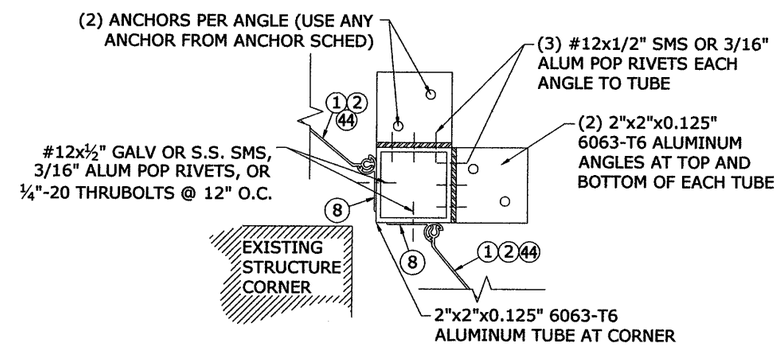

5/6 STANDARD CORNER CLOSURE

N.T.S. HORIZ SECTION

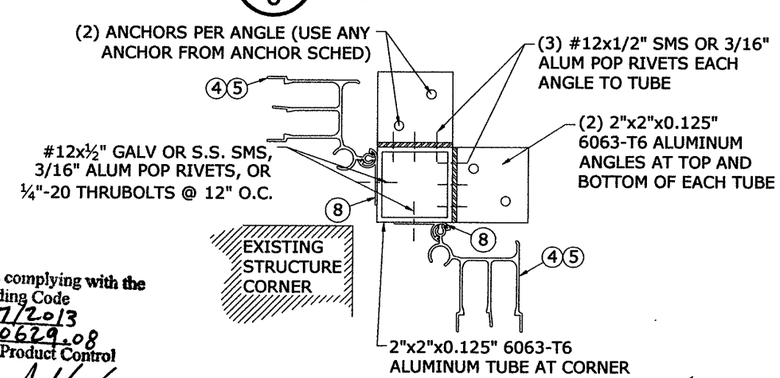

6/6 ALTERNATE CORNER CLOSURE

N.T.S. HORIZ SECTION

Approved as complying with the Florida Building Code
Date 01/17/2013
NOA# 12-0629.08
Miami Dade Product Control
By

FRANK L. BENNARDO, P.E. #46649
STATE OF FLORIDA
12/18/2012
ENGINEERING EXPRESS, INC.
160 SW 12th AVENUE
DEERFIELD BEACH, FL 33442
Ph: (954) 354-0660 Fax: (954) 354-0448
WWW.ENGEXP.COM
CERT OF AUTH #9885
A. FRANK L. BENNARDO, P.E., INC. INNOVATIONS ENGINEER

JUST SHUTTER IT INC.
1608 SW TAURUS LANE
PORT SAINT LUCIE, FL 34984

ACCORDION SHUTTER WITH ALUMINUM OR POLYCARBONATE BLADES
MIAMI-DADE NOTICE OF ACCEPTANCE

REMARKS	DRWN	CHKD	DATE
INIT ISSUE	KL	FLB	05/25/12
REV. PER COMMENTS	KL	FLB	12/18/12

12-JUSTS-01
SCALE: - 01
PAGE DESCRIPTION:
-
-

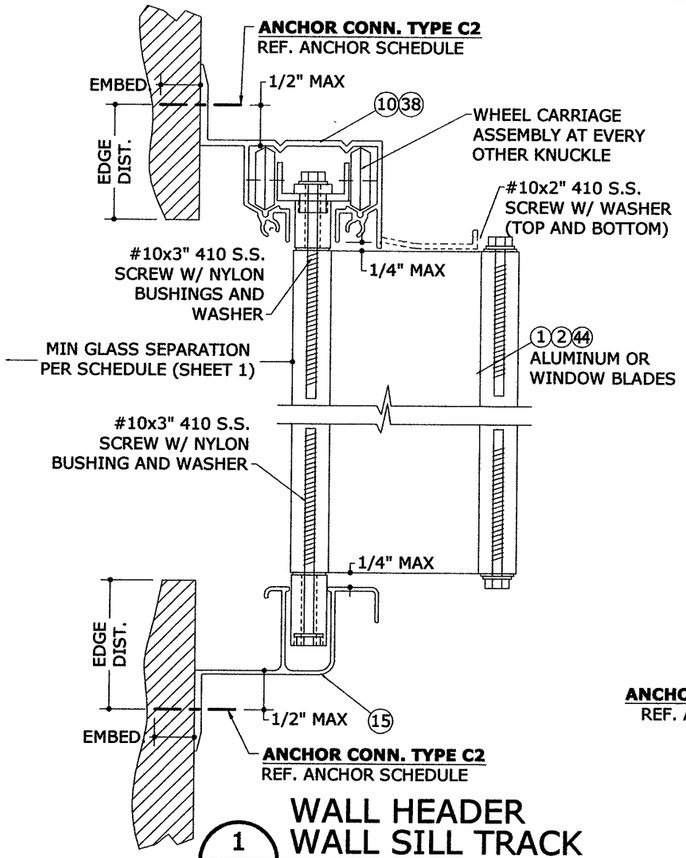

1/7 WALL HEADER WALL SILL TRACK

N.T.S. VERT SECTION

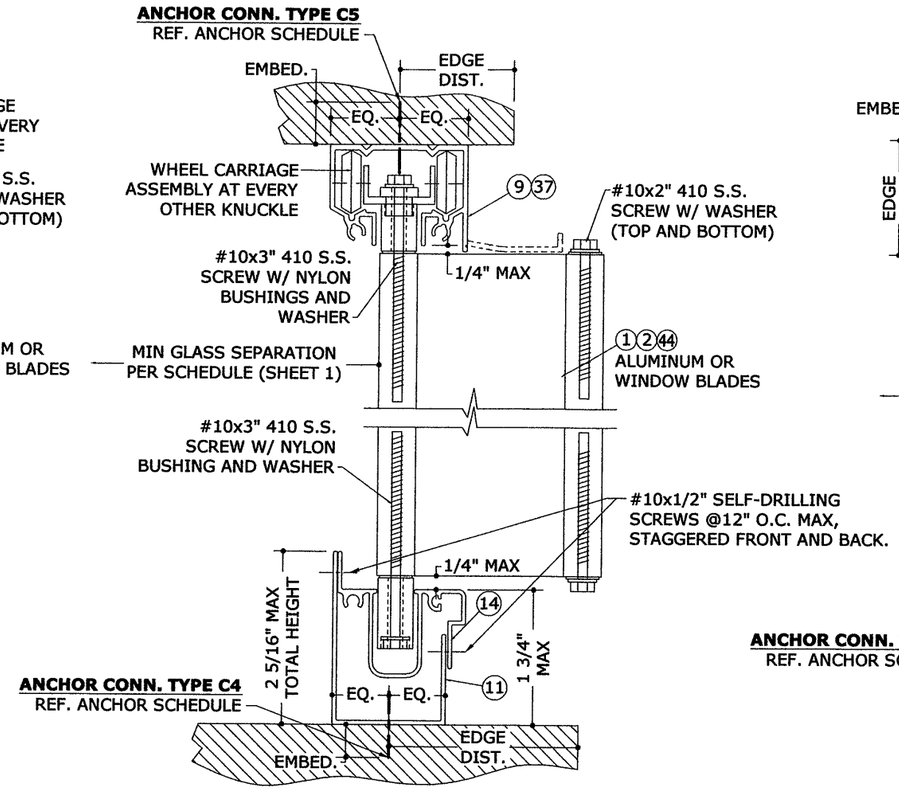

2/7 CEILING HEADER ADJUSTABLE SILL TRACK

N.T.S. VERT SECTION

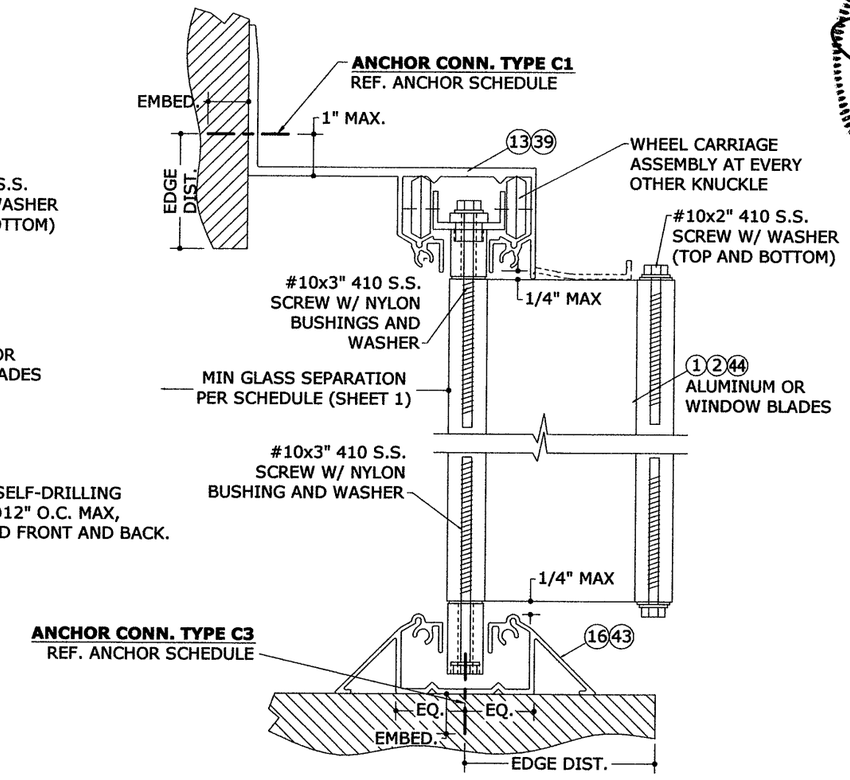

3/7 B.O. WALL HEADER WALKOVER TRACK

N.T.S. VERT SECTION

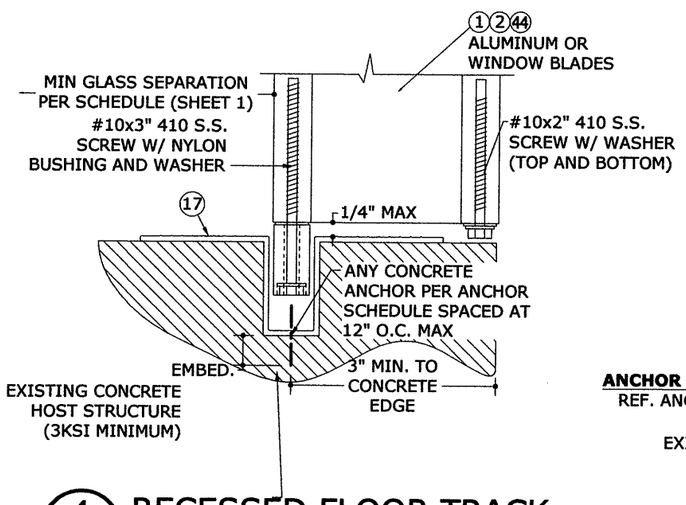

4/7 RECESSED FLOOR TRACK

N.T.S. VERT SECTION

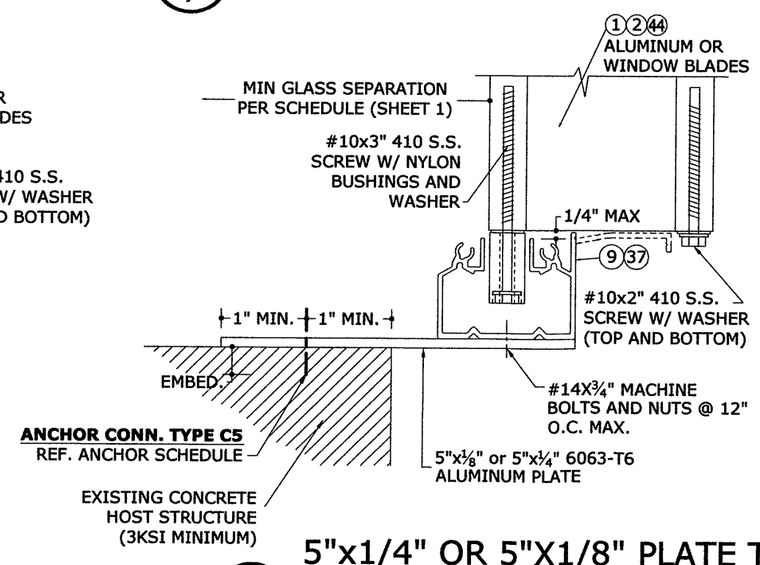

5/7 5"x1/4" OR 5"X1/8" PLATE TO EXISTING HOST STRUCTURE

N.T.S. VERT SECTION

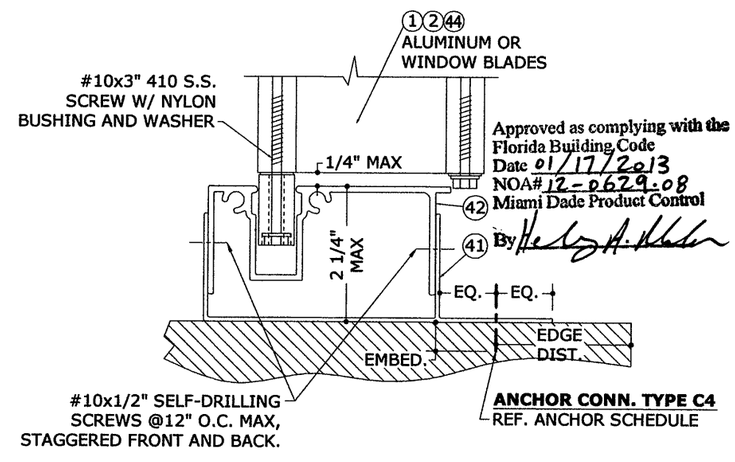

Approved as complying with the Florida Building Code
Date 01/17/2013
NOA# 12-0629.08
Miami Dade Product Control
By

6/7 ALT. ADJUSTABLE SILL TRACK THRU-FLANGE INSTALLATION

N.T.S. VERT SECTION

FRANK L. BENNARDO, P.E.
PE0046549
STATE OF FLORIDA
PROFESSIONAL ENGINEER
ENGINEERING EXPRESS
160 SW 12th AVENUE, #104
DEERFIELD BEACH, FL 33442
Ph: (954) 354-0660 Fax: (954) 354-0948
WWW.ENGEXP.COM
CERT OF AUTH #9885
A FRANK L. BENNARDO, P.E., INC. INNOVATION

JUST SHUTTER IT INC.
1608 SW TAURUS LANE
PORT SAINT LUCIE, FL 34984

ACCORDION SHUTTER
WITH ALUMINUM OR POLYCARBONATE BLADES
MIAMI-DADE NOTICE OF ACCEPTANCE

REMARKS	DRWN	CHKD	DATE
INIT ISSUE	KL	FLB	05/25/12
REV. PER COMMENTS	KL	FLB	12/18/12

12-JUSTS-01

SCALE: - 01

PAGE DESCRIPTION:

11

7

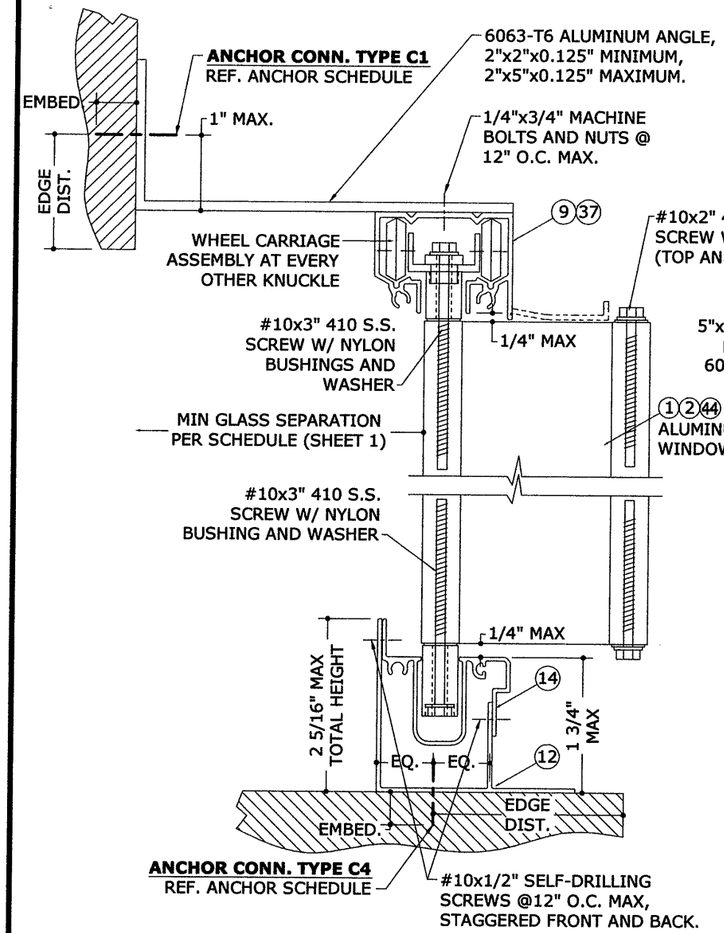

2"x5" ANGLE W/ CEILING HEADER ALT. ADJUSTABLE SILL TRACK

1/8 — N.T.S. — VERT SECTION

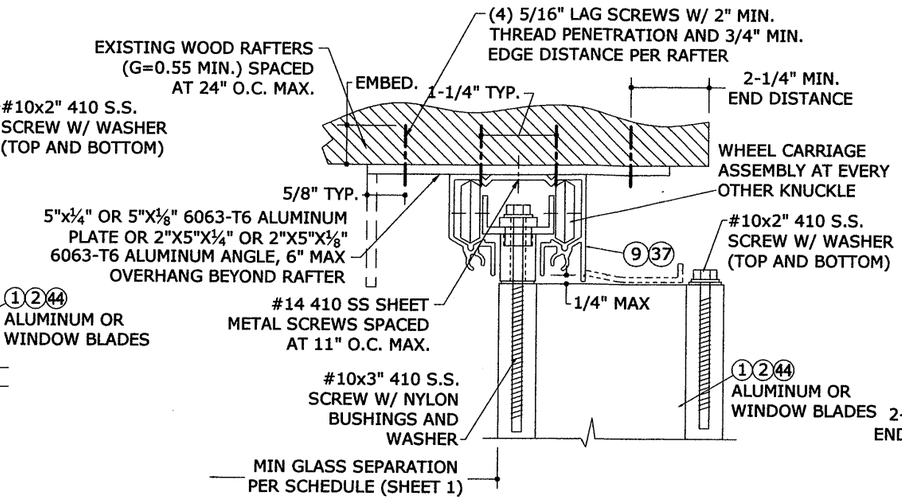

NOTE: MAXIMUM ALLOWABLE SPANS AND DESIGN PRESSURES FOR THIS MOUNTING CONDITION PER TABLE BELOW.

ALLOWABLE DESIGN PRESSURES FOR DETAIL 2/8 WITH ¼" ALUMINUM PLATE/ANGLE:

SPAN:	MAX DESIGN PRESSURE:
72"	+124.8 psf / -124.8 psf
90"	+99.8 psf / -99.8 psf
108"	+83.2 psf / -83.2 psf
126"	+61.2 psf / -71.3 psf
144"	+42.4 psf / -62.4 psf

ALLOWABLE DESIGN PRESSURES FOR DETAIL 2/8 WITH ⅛" ALUMINUM PLATE/ANGLE:

SPAN:	MAX DESIGN PRESSURE:
72"	+71.7 psf / -71.7 psf
90"	+57.3 psf / -57.3 psf
108"	+47.8 psf / -47.8 psf
126"	+40.9 psf / -40.9 psf
144"	+35.8 psf / -35.8 psf

5"x1/4" OR 5"X1/8" PLATE TO EXISTING RAFTERS

2/8 — N.T.S. — VERT SECTION

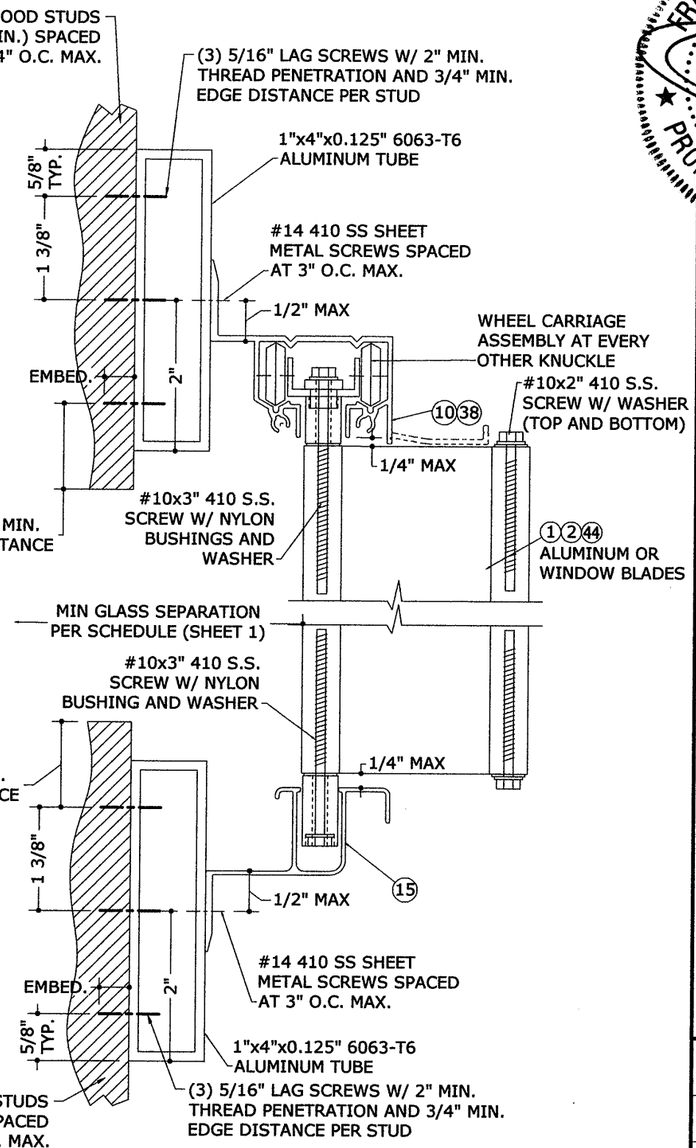

NOTE: MAXIMUM ALLOWABLE SPANS AND DESIGN PRESSURES FOR THIS MOUNTING CONDITION PER TABLE BELOW.

ALLOWABLE DESIGN PRESSURES FOR DETAIL 3/8:

SPAN:	MAX DESIGN PRESSURE:
72"	+111.5 psf / -111.5 psf
90"	+89.2 psf / -89.2 psf
108"	+74.3 psf / -74.3 psf
126"	+61.2 psf / -63.7 psf
144"	+42.4 psf / -55.7 psf

1"x4"x0.125" TUBE TO EXISTING WALL STUDS

3/8 — N.T.S. — VERT SECTION

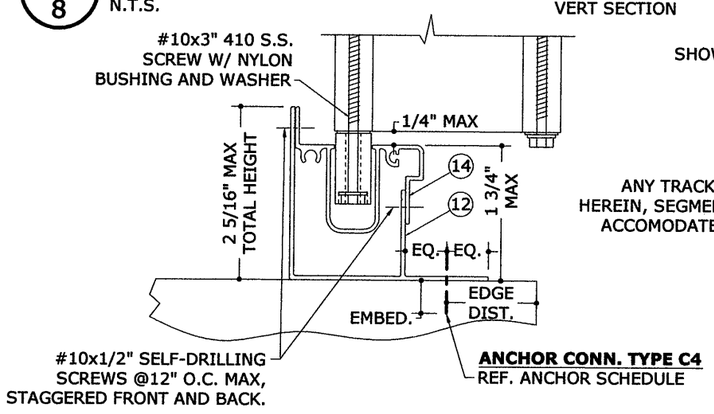

ALT. ADJUSTABLE SILL TRACK THRU-FLANGE INSTALLATION

4/8 — N.T.S. — VERT SECTION

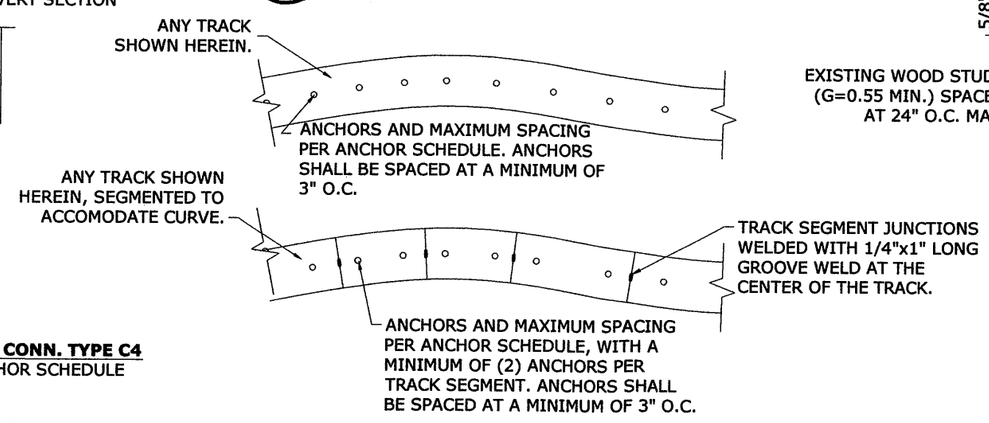

OPTIONAL CURVED TRACK W/ & W/O SEGMENTED SECTIONS

5/8 — N.T.S. — PLAN VIEW

Approved as complying with the Florida Building Code
Date 01/17/2013
NOA# 12-0629.08
Miami Dade Product Control
By

FRANK L. BENNARDO, P.E.
#PE0046549
STATE OF FLORIDA
12/18/2012
ENGINEER EXPRESS®
160 SW 12th AVENUE, #142
DEERFIELD BEACH, FL 33442
Ph: (954) 354-0660 Fax: (954) 354-0443
WWW.ENGEXP.COM
CERT OF AUTH #9885
A. FRANK L. BENNARDO, P.E., INC. INNOVATION

JUST SHUTTER IT INC.
1608 SW TAURUS LANE
PORT SAINT LUCIE, FL 34984

ACCORDION SHUTTER WITH ALUMINUM OR POLYCARBONATE BLADES
MIAMI-DADE NOTICE OF ACCEPTANCE

REMARKS	DRWN	CHKD	DATE
INIT ISSUE	KL	FLB	06/25/12
REV. PER COMMENTS	KL	FLB	12/18/12

12-JUSTS-01
SCALE: - 01
PAGE DESCRIPTION:
-
-

11

8

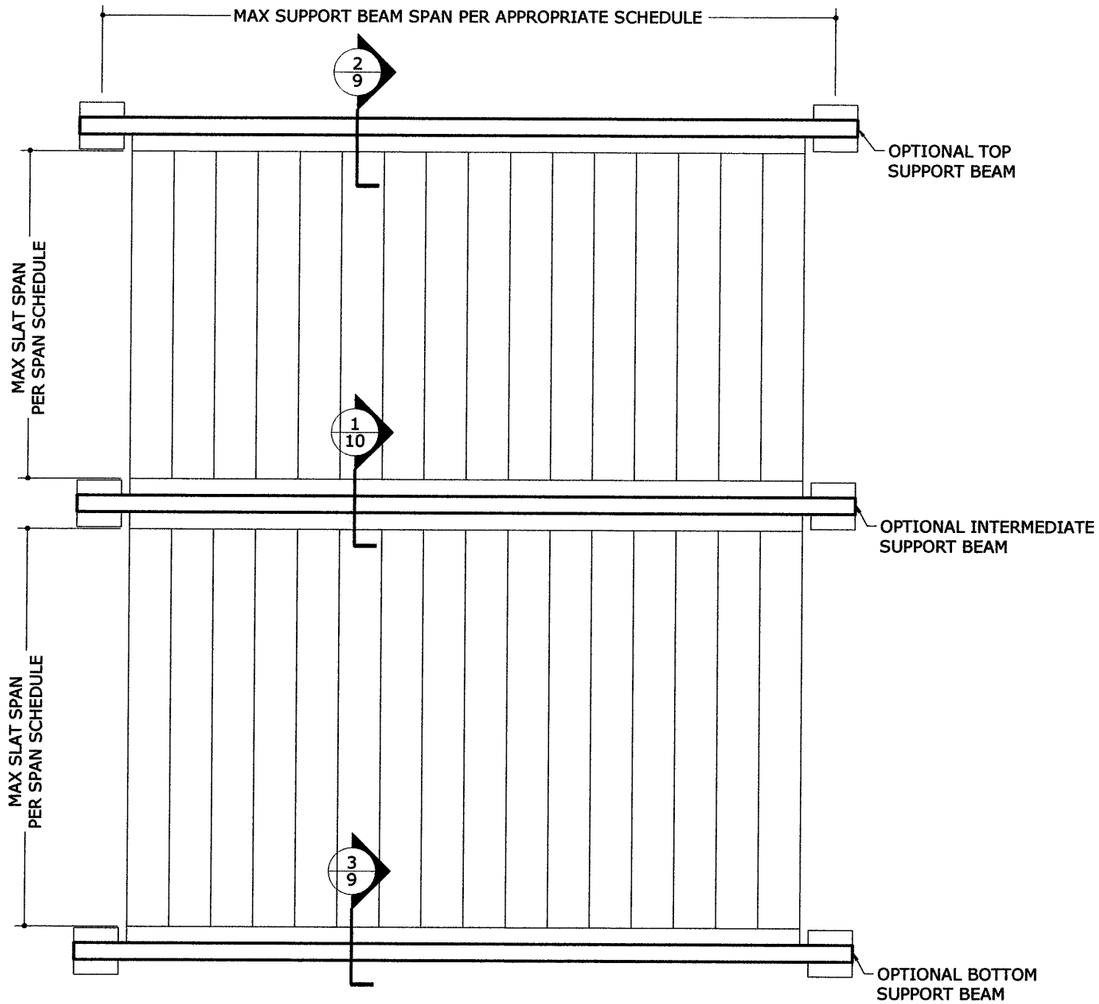

1/9 ELEVATION WITH STORM BARS

N.T.S. EXTERIOR ELEV

BEAM DESIGN SCHEDULE					
BEAM SIZE	SHUTTER SPAN	BEAM SPAN	ALLOWABLE DESIGN PRESSURE		
			TOP BEAM	BOTTOM BEAM	INTERMEDIATE BEAM
2"x5"x0.125"	5'-0"	9'-5"	73.0 PSF	73.0 PSF	37.0 PSF
	8'-0"	8'-1"	73.0 PSF	73.0 PSF	36.0 PSF
	10'-0"	7'-6"	73.0 PSF	73.0 PSF	36.0 PSF
2"x8"x0.072"/0.224"	5'-0"	14'-0"	68.4 PSF	73.0 PSF	34.2 PSF
	8'-0"	11'-6"	61.8 PSF	73.0 PSF	30.9 PSF
	10'-0"	10'-4"	61.1 PSF	73.0 PSF	30.5 PSF
2"x9"x0.072"/0.224"	5'-0"	15'-5"	59.4 PSF	73.0 PSF	29.7 PSF
	8'-0"	12'-5"	56.3 PSF	73.0 PSF	28.2 PSF
	10'-0"	11'-2"	55.5 PSF	73.0 PSF	27.7 PSF

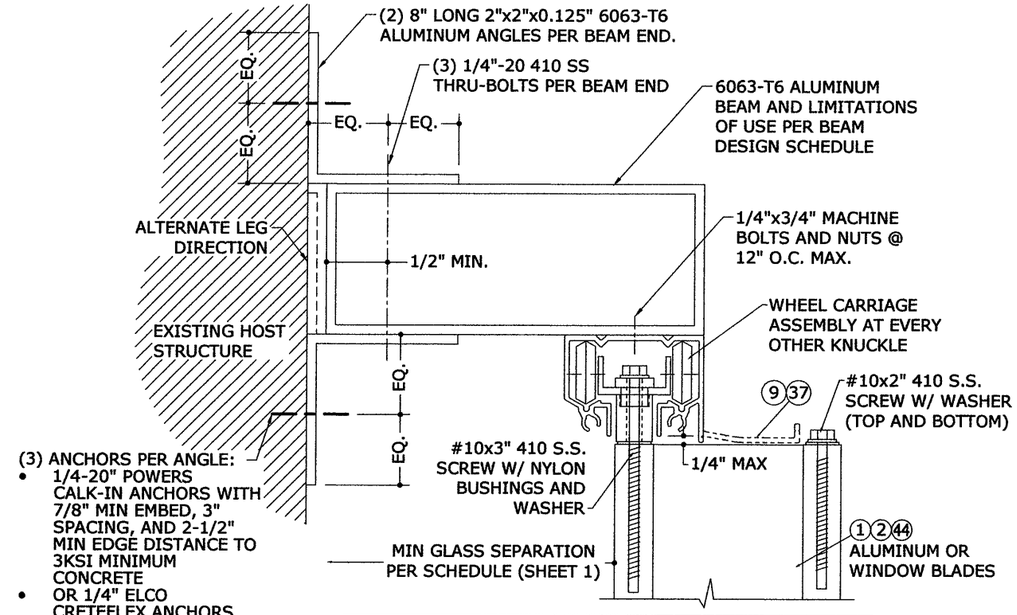

NOTE: MAX DESIGN PRESSURE AND MAX SHUTTER SPAN THE LESSER OF VALUES IN BEAM DESIGN SCHEDULE ON THIS SHEET OR IN 'ALLOWABLE SPAN SCHEDULE' ON SHEET 1.

2/9 TOP SUPPORT BEAM

N.T.S. VERT SECTION

Approved as complying with the Florida Building Code
Date 01/17/2013
NOA# 12-0629.08
Miami Dade Product Control
By

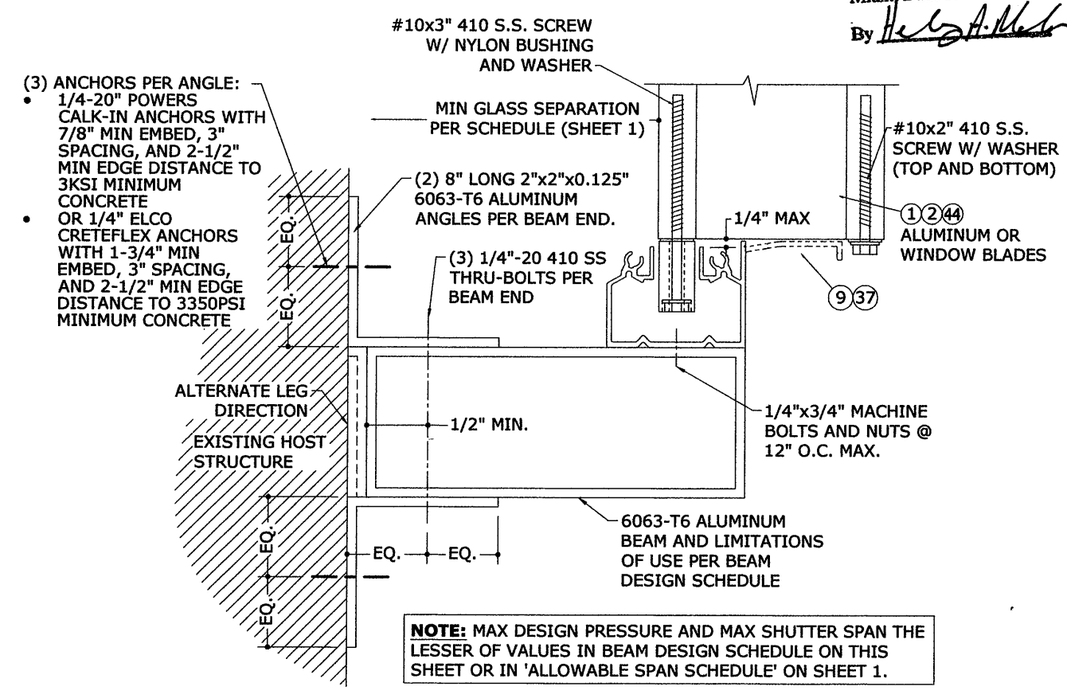

NOTE: MAX DESIGN PRESSURE AND MAX SHUTTER SPAN THE LESSER OF VALUES IN BEAM DESIGN SCHEDULE ON THIS SHEET OR IN 'ALLOWABLE SPAN SCHEDULE' ON SHEET 1.

3/9 BOTTOM SUPPORT BEAM

N.T.S. VERT SECTION

FRANK L. BENNARDO, P.E.
LICENSE NO. 46540
12/18/2012
STATE OF FLORIDA
PROFESSIONAL ENGINEER
ENGINEERS EXPRESS, INC.
160 SW 12th AVENUE, 106
DEERFIELD BEACH, FL 33442
PH: (954) 354-0660 FAX: (954) 354-0673
WWW.ENGEXP.COM
CERT OF AUTH #9886
A FRANK L. BENNARDO, P.E., INC. INNOVATION

JUST SHUTTER IT INC.
1608 SW TAURUS LANE
PORT SAINT LUCIE, FL 34984

ACCORDION SHUTTER WITH ALUMINUM OR POLYCARBONATE BLADES
MIAMI-DADE NOTICE OF ACCEPTANCE

REMARKS	DRWN	CHKD	DATE
INIT ISSUE	KL	FLB	05/25/12
REV. PER COMMENTS	KL	FLB	12/18/12

12-JUSTS-01
SCALE: - 01
PAGE DESCRIPTION:
-
-

11

9

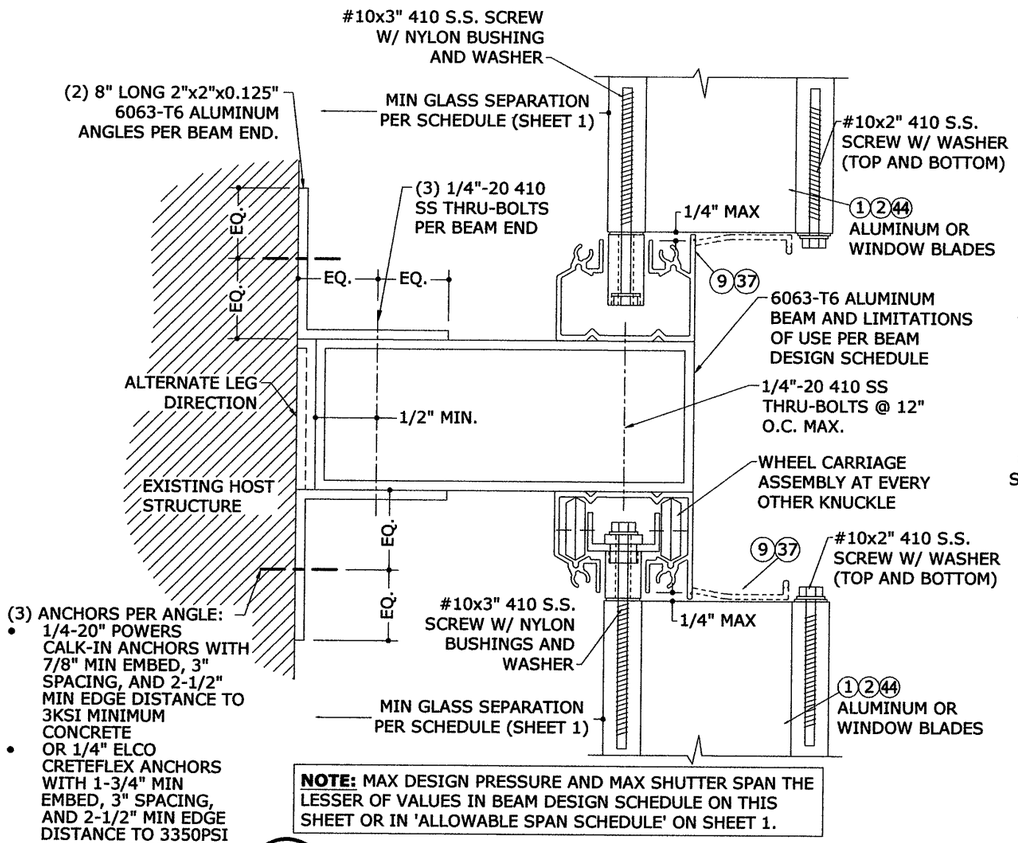

NOTE: MAX DESIGN PRESSURE AND MAX SHUTTER SPAN THE LESSER OF VALUES IN BEAM DESIGN SCHEDULE ON THIS SHEET OR IN 'ALLOWABLE SPAN SCHEDULE' ON SHEET 1.

1/10 INTERMEDIATE SUPPORT BEAM

N.T.S. VERT SECTION

BEAM DESIGN SCHEDULE

BEAM SIZE	SHUTTER SPAN	BEAM SPAN	ALLOWABLE DESIGN PRESSURE		
			TOP BEAM	BOTTOM BEAM	INTERMEDIATE BEAM
2"x5"x0.125"	5'-0"	9'-5"	73.0 PSF	73.0 PSF	37.0 PSF
	8'-0"	8'-1"	73.0 PSF	73.0 PSF	36.0 PSF
	10'-0"	7'-6"	73.0 PSF	73.0 PSF	36.0 PSF
2"x8"x0.072"/0.224"	5'-0"	14'-0"	68.4 PSF	73.0 PSF	34.2 PSF
	8'-0"	11'-6"	61.8 PSF	73.0 PSF	30.9 PSF
	10'-0"	10'-4"	61.1 PSF	73.0 PSF	30.5 PSF
2"x9"x0.072"/0.224"	5'-0"	15'-5"	59.4 PSF	73.0 PSF	29.7 PSF
	8'-0"	12'-5"	56.3 PSF	73.0 PSF	28.2 PSF
	10'-0"	11'-2"	55.5 PSF	73.0 PSF	27.7 PSF

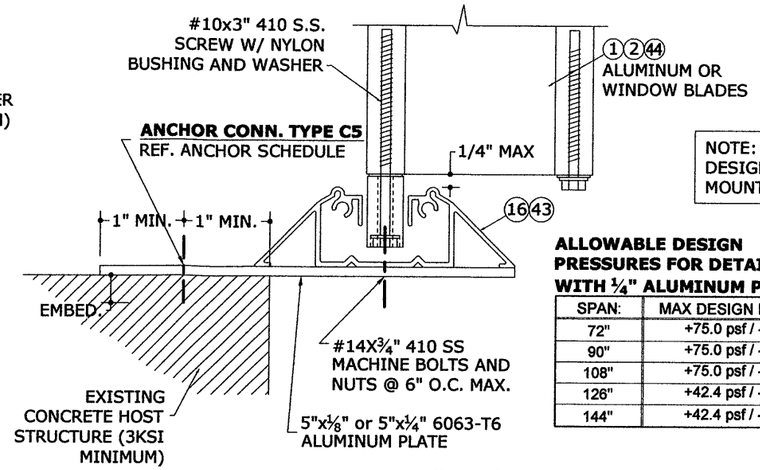

NOTE: MAXIMUM ALLOWABLE SPANS AND DESIGN PRESSURES FOR ALUMINUM PLATE MOUNTING CONDITION PER TABLES BELOW.

ALLOWABLE DESIGN PRESSURES FOR DETAIL 2/10 WITH ¼" ALUMINUM PLATE:

SPAN:	MAX DESIGN PRESSURE:
72"	+75.0 psf / -75.0 psf
90"	+75.0 psf / -75.0 psf
108"	+75.0 psf / -75.0 psf
126"	+42.4 psf / -62.4 psf
144"	+42.4 psf / -62.4 psf

ALLOWABLE DESIGN PRESSURES FOR DETAIL 2/10 WITH ⅛" ALUMINUM PLATE:

SPAN:	MAX DESIGN PRESSURE:
72"	+65.7psf / -65.7 psf
90"	+52.5 psf / -52.5 psf
108"	+43.8 psf / -43.8 psf
126"	+37.5 psf / -37.5 psf
144"	+32.8 psf / -32.8 psf

2/10 5"x1/4" OR 5"X1/8" PLATE TO EXISTING HOST STRUCTURE

N.T.S. VERT SECTION

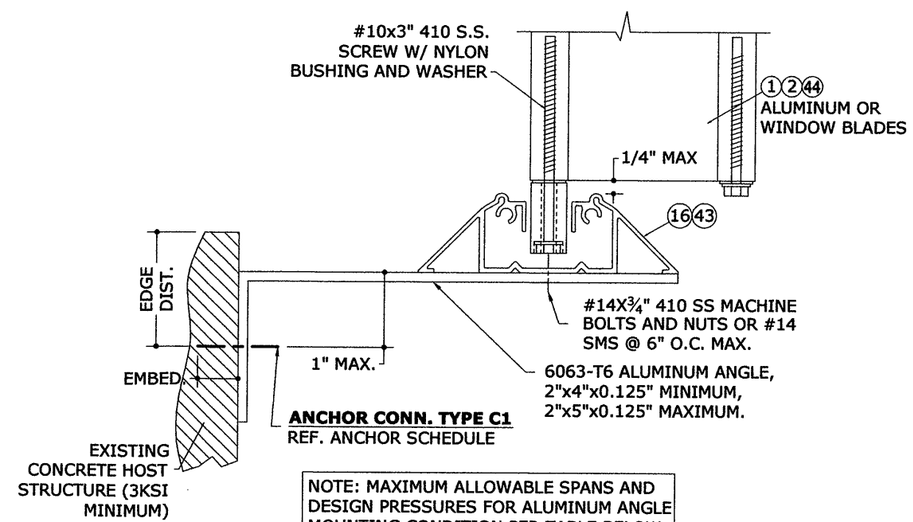

NOTE: MAXIMUM ALLOWABLE SPANS AND DESIGN PRESSURES FOR ALUMINUM ANGLE MOUNTING CONDITION PER TABLE BELOW.

ALLOWABLE DESIGN PRESSURES FOR DETAIL 3/10 WITH ⅛" ALUMINUM ANGLE:

SPAN:	MAX DESIGN PRESSURE:
72"	+75.0 psf / -75.0 psf
90"	+61.7 psf / -61.7 psf
108"	+53.4 psf / -53.4 psf
126"	+42.4 psf / -44.0 psf
144"	+25.5 psf / -41.6 psf

3/10 2"x5" ANGLE W/ WALKOVER TRACK

N.T.S. VERT SECTION

Approved as complying with the Florida Building Code
Date 01/17/2013
NOA# 12-0629.08
Miami Dade Product Control
By

FRANK L. BENNARDO, P.E. #PE0046849 — NO. 46849 — 12/18/2012 — STATE OF FLORIDA — PROFESSIONAL ENGINEER

ENGINEER EXPRESS
160 SW 12th AVENUE, #106
DEERFIELD BEACH, FL 33442
Ph: (954) 354-0660 FAX: (954) 354-0443
WWW.ENGEXP.COM
CERT OF AUTH #9885
A. FRANK L. BENNARDO, P.E., INC. INNOVATION

JUST SHUTTER IT INC.
1608 SW TAURUS LANE
PORT SAINT LUCIE, FL 34984

ACCORDION SHUTTER WITH ALUMINUM OR POLYCARBONATE BLADES
MIAMI-DADE NOTICE OF ACCEPTANCE

REMARKS	DRWN	CHKD	DATE
INIT ISSUE	KL	FLB	05/25/12
REV. PER COMMENTS	KL	FLB	12/18/12

12-JUSTS-01

SCALE: - 01

PAGE DESCRIPTION:
-
-

11

10

ANCHOR SCHEDULE

HOST STRUCT.	ANCHOR	LOAD (psf)	2.5" MIN EDGE DISTANCE — Spans Up To 6'-0" CONN TYPE C1	C2	C3	C4	C5	Spans Up To 9'-0" CONN TYPE C1	C2	C3	C4	C5	Spans Up To 12'-0" CONN TYPE C1	C2	C3	C4	C5	Spans Up To 13'-6" CONN TYPE C1	C2	C3	C4	C5
CONCRETE	1/4" ITW TAPCON WITH 1-3/4" EMBED (3192psi MIN CONC)	47	12.0"	12.0"	12.0"	11.7"	12.0"	12.0"	12.0"	12.0"	7.4"	12.0"	11.2"	8.9"	11.8"	5.5"	9.0"	9.5"	7.6"	10.6"	4.8"	8.0"
		60	12.0"	12.0"	12.0"	8.9"	12.0"	12.0"	9.5"	12.0"	5.7"	9.4"	7.9"	6.4"	9.4"	4.2"	7.0"	6.8"	5.5"	8.4"	3.7"	6.2"
		72	12.0"	12.0"	12.0"	7.3"	11.9"	9.2"	7.4"	10.3"	4.7"	7.8"	6.2"	5.1"	7.9"	3.5"	5.8"	5.8"	4.7"	7.4"	3.3"	5.5"
		120	7.9"	6.4"	9.4"	4.2"	7.0"	5.8"	4.7"	7.4"	3.3"	5.5"	5.8"	4.7"	7.4"	3.3"	5.5"	5.8"	4.7"	7.4"	3.3"	5.5"
		152	5.8"	4.7"	7.5"	3.3"	5.5"	5.8"	4.7"	7.4"	3.3"	5.5"	5.8"	4.7"	7.4"	3.3"	5.5"	5.8"	4.7"	7.4"	3.3"	5.5"
	1/4" ELCO PANELMATE (FEMALE, MALE) W/ 1-3/4" MIN EMBED (3350psi MIN CONC) *	47	12.0"	12.0"	12.0"	11.8"	12.0"	12.0"	12.0"	12.0"	7.5"	12.0"	11.2"	8.9"	12.0"	5.5"	9.2"	9.4"	7.5"	10.9"	4.9"	8.1"
		60	12.0"	12.0"	12.0"	9.0"	12.0"	11.9"	9.5"	12.0"	5.8"	9.6"	7.9"	6.4"	9.6"	4.3"	7.1"	6.7"	5.5"	8.6"	3.8"	6.3"
		72	12.0"	12.0"	12.0"	7.3"	12.0"	9.1"	7.3"	10.7"	4.8"	8.0"	6.2"	5.0"	8.1"	3.5"	5.9"	5.8"	4.7"	7.7"	3.3"	5.6"
		120	7.9"	6.4"	9.6"	4.3"	7.1"	5.8"	4.7"	7.7"	3.3"	5.6"	5.8"	4.7"	7.7"	3.3"	5.6"	5.8"	4.7"	7.7"	3.3"	5.6"
		152	5.8"	4.7"	7.7"	3.3"	5.6"	5.8"	4.7"	7.7"	3.3"	5.6"	5.8"	4.7"	7.7"	3.3"	5.6"	5.8"	4.7"	7.7"	3.3"	5.6"
	1/4 ELCO CRETEFLEX W/ 1-3/4" MIN EMBED (3350psi MIN CONC)	47	12.0"	12.0"	12.0"	12.0"	12.0"	12.0"	12.0"	12.0"	9.6"	12.0"	12.0"	10.2"	12.0"	7.0"	12.0"	10.8"	8.7"	12.0"	6.2"	11.1"
		60	12.0"	12.0"	12.0"	11.4"	12.0"	12.0"	10.9"	12.0"	7.3"	12.0"	9.1"	7.3"	12.0"	5.4"	9.7"	7.8"	6.3"	12.0"	4.8"	8.6"
		72	12.0"	12.0"	12.0"	9.4"	12.0"	10.5"	8.4"	12.0"	6.0"	10.8"	7.1"	5.8"	11.8"	4.5"	8.1"	6.6"	5.4"	11.2"	4.2"	7.6"
		120	9.1"	7.3"	12.0"	5.4"	9.7"	6.6"	5.4"	11.2"	4.2"	7.6"	6.6"	5.4"	11.2"	4.2"	7.6"	6.6"	5.4"	11.2"	4.2"	7.6"
		152	6.7"	5.4"	11.2"	4.2"	7.6"	6.6"	5.4"	11.2"	4.2"	7.6"	6.6"	5.4"	11.2"	4.2"	7.6"	6.6"	5.4"	11.2"	4.2"	7.6"
	1/4-20 POWERS CALK-IN WITH 7/8" MIN EMBED (3000psi MIN CONC) *	47	12.0"	12.0"	12.0"	9.2"	12.0"	12.0"	12.0"	11.1"	5.9"	9.1"	9.7"	7.7"	8.5"	4.3"	6.7"	8.2"	6.6"	7.6"	3.8"	6.0"
		60	12.0"	12.0"	12.0"	7.0"	10.7"	10.4"	8.2"	8.8"	4.5"	7.1"	6.9"	5.5"	6.7"	3.3"	5.3"	5.9"	4.8"	6.0"	3.0"	4.7"
		72	12.0"	11.7"	10.9"	5.7"	8.9"	7.9"	6.4"	7.4"	3.7"	5.8"	5.4"	4.4"	5.6"		4.4"	5.0"	4.1"	5.3"		4.1"
		120	6.9"	5.5"	6.7"	3.3"	5.3"	5.0"	4.1"	5.3"		4.1"	5.0"	4.1"	5.3"		4.1"	5.0"	4.1"	5.3"		4.1"
		152	5.0"	4.1"	5.3"		4.1"	5.0"	4.1"	5.3"		4.1"	5.0"	4.1"	5.3"		4.1"	5.0"	4.1"	5.3"		4.1"
	1/4 ELCO PANELMATE INSERT WITH 1-5/8" MIN EMBED (3000psi MIN CONC) *	47	12.0"	12.0"	12.0"	7.7"	12.0"	11.3"	8.8"	10.6"	4.9"	8.2"	7.1"	5.6"	8.1"	3.6"	6.1"	5.9"	4.8"	7.3"	3.2"	5.4"
		60	12.0"	11.7"	12.0"	5.8"	9.7"	7.5"	6.0"	8.5"	3.8"	6.3"	5.0"	4.0"	6.5"		4.7"	4.3"	3.5"	5.8"		4.2"
		72	10.9"	8.5"	10.4"	4.8"	8.0"	5.8"	4.6"	7.1"	3.1"	5.3"	3.9"	3.2"	5.4"		3.9"	3.6"	3.0"	5.1"		3.7"
		120	5.0"	4.0"	6.5"		4.7"	3.6"	3.0"	5.1"		3.7"	3.6"	3.0"	5.1"		3.7"	3.6"	3.0"	5.1"		3.7"
		152	3.7"	3.0"	5.2"		3.7"	3.6"	3.0"	5.1"		3.7"	3.6"	3.0"	5.1"		3.7"	3.6"	3.0"	5.1"		3.7"
HOLLOW BLOCK	1/4" ITW TAPCON WITH 1-1/4" EMBED	47	10.7"	7.4"	8.6"	3.4"	6.4"	4.2"	3.3"	6.1"		4.2"			4.7"		3.1"			4.2"		
		60	5.8"	4.4"	7.0"		5.0"			4.9"		3.2"			3.8"					3.4"		
		72	4.1"	3.2"	6.0"		4.1"			4.2"					3.2"					3.0"		
		120			3.8"					3.0"					3.0"					3.0"		
		152			3.0"					3.0"					3.0"					3.0"		
	1/4" ELCO PANELMATE (FEMALE, MALE) W/ 1-1/4" MIN EMBED *	47	12.0"	12.0"	10.6"	5.0"	8.5"	7.2"	5.6"	7.4"	3.2"	5.5"	4.5"	3.6"	5.6"		4.1"	3.8"	3.0"	5.1"		3.6"
		60	9.9"	7.4"	8.5"	3.8"	6.6"	4.8"	3.8"	5.9"		4.3"	3.2"		4.5"		3.2"			4.0"		
		72	6.9"	5.4"	7.2"	3.1"	5.4"	3.7"		5.0"		3.6"			3.8"					3.6"		
		120	3.2"		4.5"		3.2"			3.6"					3.6"					3.6"		
		152			3.6"					3.6"					3.6"					3.6"		
	1/4 ELCO CRETEFLEX W/ 1-1/4" MIN EMBED	47	12.0"	12.0"	12.0"	5.9"	10.3"	8.0"	6.2"	9.2"	3.7"	6.7"	5.0"	4.0"	7.1"		5.0"	4.2"	3.4"	6.3"		4.4"
		60	11.0"	8.3"	10.6"	4.5"	8.0"	5.3"	4.2"	7.3"		5.2"	3.5"		5.6"		3.9"	3.0"		5.0"		3.4"
		72	7.7"	6.0"	9.0"	3.7"	6.6"	4.1"	3.3"	6.2"		4.3"			4.7"		3.2"			4.5"		3.0"
		120	3.5"		5.6"		3.9"			4.5"		3.0"			4.5"		3.0"			4.5"		3.0"
		152			4.5"		3.0"			4.5"		3.0"			4.5"		3.0"			4.5"		3.0"
	1/4-20 ALL POINTS SOLID SET WITH 7/8" MIN EMBED *	47	12.0"	12.0"	11.6"	6.0"	9.7"	9.4"	7.3"	8.0"	3.9"	6.3"	5.9"	4.7"	6.1"		4.7"	4.9"		5.5"		4.2"
		60	12.0"	9.7"	9.3"	4.6"	7.5"	6.3"	5.0"	6.4"		4.9"			4.9"		3.6"			4.4"		
		72	9.1"	7.0"	7.9"	3.8"	6.2"	4.8"		5.4"		4.1"			4.1"					3.9"		
		120			4.9"		3.6"			3.9"					3.9"					3.9"		
		152			3.9"					3.9"					3.9"					3.9"		
	1/4 ELCO PANELMATE INSERT WITH 1-1/4" MIN EMBED *	47	12.0"	12.0"	12.0"	6.1"	10.0"	9.1"	7.0"	8.5"	3.9"	6.5"	5.7"	4.5"	6.5"		4.9"	4.8"	3.8"	5.8"		4.3"
		60	12.0"	9.4"	9.9"	4.6"	7.7"	6.0"	4.8"	6.8"	3.0"	5.1"	4.0"	3.2"	5.2"		3.8"	3.4"		4.6"		3.3"
		72	8.7"	6.8"	8.3"	3.8"	6.4"	4.6"	3.7"	5.7"		4.2"	3.1"		4.3"		3.1"			4.1"		3.0"
		120	4.0"	3.2"	5.2"		3.8"			4.1"		3.0"			4.1"		3.0"			4.1"		3.0"
		152			4.1"		3.0"			4.1"		3.0"			4.1"		3.0"			4.1"		3.0"
			3/4" MIN EDGE DISTANCE																			
WOOD	1/4" ITW TAPCON OR #14 WOOD SCREW W/ 1-1/2" EMBED	47	12.0"	12.0"	10.4"	7.1"	9.4"	12.0"	12.0"	7.1"	4.6"	6.2"	10.3"	8.2"	5.3"	3.4"	4.6"	8.7"	6.9"	4.8"	3.0"	4.1"
		60	12.0"	12.0"	8.2"	5.5"	7.3"	11.0"	8.7"	5.6"	3.6"	4.8"	7.3"	5.9"	4.2"	2.6"	3.6"	6.2"	5.0"	3.8"	2.3"	3.2"
		72	12.0"	12.0"	6.9"	4.5"	6.1"	8.4"	6.7"	4.7"	2.9"	4.0"	5.7"	4.6"	3.5"	2.2"	3.0"	5.3"	4.3"	3.3"	2.1"	2.8"
		120	7.3"	5.9"	4.2"	2.6"	3.6"	5.3"	4.3"	3.3"	2.1"	2.8"	5.3"	4.3"	3.3"	2.1"	2.8"	5.3"	4.3"	3.3"	2.1"	2.8"
		152	5.3"	4.3"	3.3"	2.1"	2.8"	5.3"	4.3"	3.3"	2.1"	2.8"	5.3"	4.3"	3.3"	2.1"	2.8"	5.3"	4.3"	3.3"	2.1"	2.8"
	1/4" ELCO PANELMATE (FEMALE, MALE) W/ 1-7/8" MIN EMBED *	47	12.0"	12.0"	12.0"	11.5"	12.0"	12.0"	12.0"	12.0"	7.4"	10.9"	12.0"	10.8"	9.9"	5.5"	8.1"	11.4"	9.1"	8.8"	4.8"	7.2"
		60	12.0"	12.0"	12.0"	8.8"	12.0"	12.0"	11.5"	10.3"	5.7"	8.5"	9.5"	7.7"	7.8"	4.2"	6.3"	8.2"	6.6"	7.0"	3.7"	5.6"
		72	12.0"	12.0"	12.0"	7.3"	10.7"	11.0"	8.9"	8.6"	4.7"	7.0"	7.5"	6.1"	6.5"	3.5"	5.3"	7.0"	5.7"	6.2"	3.3"	5.0"
		120	9.5"	7.7"	7.8"	4.2"	6.3"	7.0"	5.7"	6.2"	3.3"	5.0"	7.0"	5.7"	6.2"	3.3"	5.0"	7.0"	5.7"	6.2"	3.3"	5.0"
		152	7.0"	5.7"	6.2"	3.3"	5.0"	7.0"	5.7"	6.2"	3.3"	5.0"	7.0"	5.7"	6.2"	3.3"	5.0"	7.0"	5.7"	6.2"	3.3"	5.0"
	1/4" LAG SCREW WITH 1.5" MIN THREAD PENETR (EMBED)	47	12.0"	12.0"	9.9"	7.3"	9.2"	12.0"	12.0"	6.7"	4.7"	6.1"	12.0"	10.2"	5.0"	3.5"	4.5"	10.8"	8.6"	4.5"	3.1"	4.0"
		60	12.0"	12.0"	7.8"	5.6"	7.1"	12.0"	10.9"	5.3"	3.7"	4.7"	9.0"	7.3"	4.0"	2.7"	3.5"	7.7"	6.3"	3.5"	2.4"	3.1"
		72	12.0"	12.0"	6.5"	4.6"	5.9"	10.4"	8.4"	4.4"	3.0"	3.9"	7.1"	5.8"	3.3"	2.3"	2.9"	6.6"	5.4"	3.1"	2.1"	2.8"
		120	9.0"	7.3"	4.0"	2.7"	3.5"	6.6"	5.4"	3.1"	2.1"	2.8"	6.6"	5.4"	3.1"	2.1"	2.8"	6.6"	5.4"	3.1"	2.1"	2.8"
		152	6.6"	5.4"	3.1"	2.1"	2.8"	6.6"	5.4"	3.1"	2.1"	2.8"	6.6"	5.4"	3.1"	2.1"	2.8"	6.6"	5.4"	3.1"	2.1"	2.8"

ANCHOR NOTES:

1. ANCHORS SHALL BE INSTALLED IN ACCORDANCE WITH MANUFACTURERS' RECOMMENDATIONS.
2. TAPCONS MAY BE CARBON STEEL OR STAINLESS STEEL AND SHALL BE MANUFACTURED BY ITW.
3. ENSURE MINIMUM 2.5" EDGE DISTANCE FOR ALL ANCHORS TO CONCRETE & TO HOLLOW BLOCK.
4. WHERE ANCHORS FASTEN TO NARROW FACE OF STUD FRAMING, ANCHOR SHALL BE LOCATED IN CENTER OF NOMINAL 2x (MIN) WOOD STUD (i.e. 3/4" EDGE DISTANCE IS ACCEPTABLE FOR ANCHORS TO WOOD FRAMING).
5. WOOD HOST STRUCTURE SHALL BE "SOUTHERN PINE" G=0.55 OR GREATER DENSITY.
6. MINIMUM EMBEDMENT SHALL BE AS NOTED IN ANCHOR SCHEDULE. MINIMUM EMBEDMENT AND EDGE DISTANCE EXCLUDES STUCCO, FOAM, BRICK, AND OTHER WALL FINISHES.
7. ANCHOR SCHEDULE APPLIES TO ALL PRODUCTS CERTIFIED HEREIN, BUT ONLY PROVIDES MAXIMUM ALLOWABLE ANCHOR SPACING. MAXIMUM ALLOWABLE SPANS AND PRESSURES INDICATED IN SPAN SCHEDULE SHALL APPLY.
8. WHERE EXISTING STRUCTURE IS WOOD FRAMING, EXISTING CONDITIONS MAY VARY. FIELD VERIFY THAT FASTENERS ARE INTO ADEQUATE WOOD FRAMING MEMBERS, NOT INTO PLYWOOD.
9. WOOD BUCKS (BY OTHERS) SHALL BE ANCHORED PROPERLY TO TRANSFER LOADS TO THE EXISTING STRUCTURE.
10. MACHINE SCREWS SHALL HAVE MINIMUM OF 1/2" ENGAGEMENT OF THREADS IN BASE ANCHOR AND MAY HAVE EITHER A PAN HEAD, TRUSS HEAD, OR WAFER HEAD ("SIDEWALK BOLT") U.N.O.
11. (hatched) DESIGNATES ANCHOR CONDITIONS WHICH ARE NOT ACCEPTABLE FOR USE.
13. * DESIGNATES ANCHORS WHICH ARE REMOVABLE.

Approved as complying with the Florida Building Code
Date 01/17/2013
NOA# 12-0629.08
Miami Dade Product Control
By [signature]

FRANK L. BENNARDO P.E. # PE0046549
FRANK L. BENNARDO LICENSE No. 46549 STATE OF FLORIDA PROFESSIONAL ENGINEER 12/18/2012

ENGINEERING EXPRESS
160 SW 12th AVENUE, #106
DEERFIELD BEACH, FL 33442
PH: (954) 354-0660 FAX: (954) 354-0443
WWW.ENGEXP.COM
CERT OF AUTH #9885
A FRANK L. BENNARDO, P.E., INC. INNOVATION

JUST SHUTTER IT INC.
1608 SW TAURUS LANE
PORT SAINT LUCIE, FL 34984

ACCORDION SHUTTER
WITH ALUMINUM OR POLYCARBONATE BLADES
MIAMI-DADE NOTICE OF ACCEPTANCE

REMARKS	DRWN	CHKD	DATE
INIT ISSUE	KL	FLB	05/25/12
REV. PER COMMENTS	KL	FLB	12/18/12
.	.	.	.
.	.	.	.
.	.	.	.

12-JUSTS-01
SCALE: - 01
PAGE DESCRIPTION:
-
-