MIAMI-DADE COUNTY
DEPARTMENT OF PERMITTING, ENVIRONMENT, AND REGULATORY AFFAIRS (PERA)
BOARD AND CODE ADMINISTRATION DIVISION

MIAMI-DADE COUNTY
PRODUCT CONTROL SECTION
11805 SW 26 Street, Room 208
Miami, Florida 33175-2474
T (786) 315-2590 F (786) 315-2599
www.miamidade.gov/pera

NOTICE OF ACCEPTANCE (NOA)

Enviralum Industries, Inc.
5100 NW 72nd Avenue, Bldg. C
Miami, FL 33166

SCOPE:

This NOA is being issued under the applicable rules and regulations governing the use of construction materials. The documentation submitted has been reviewed and accepted by Miami-Dade County PERA - Product Control Section to be used in Miami Dade County and other areas where allowed by the Authority Having Jurisdiction (AHJ).

This NOA shall not be valid after the expiration date stated below. The Miami-Dade County Product Control Section (In Miami Dade County) and/or the AHJ (in areas other than Miami Dade County) reserve the right to have this product or material tested for quality assurance purposes. If this product or material fails to perform in the accepted manner, the manufacturer will incur the expense of such testing and the AHJ may immediately revoke, modify, or suspend the use of such product or material within their jurisdiction. PERA reserves the right to revoke this acceptance, if it is determined by Miami-Dade County Product Control Section that this product or material fails to meet the requirements of the applicable building code.

This product is approved as described herein, and has been designed to comply with the Florida Building Code, including the High Velocity Hurricane Zone.

DESCRIPTION: Series "ENV-450" Aluminum Window Wall System – L.M.I.

APPROVAL DOCUMENT: Drawing No. **W12-29**, titled "Series ENV-450 Alum Window Wall Sys. (L.M.I.)", sheets 1 through 12 of 12, dated 06/04/12, with revision A dated 0-8/22/12, prepared by Al-Farooq Corporation, signed and sealed by Javad Ahmad, P.E., bearing the Miami-Dade County Product Control Approval stamp with the Notice of Acceptance number and approval date by the Miami-Dade County Product Control Section.

MISSILE IMPACT RATING: Large and Small Missile Impact Resistant

LABELING: Each unit shall bear a permanent label with the manufacturer's name or logo, city, state, model/series, and following statement: "Miami-Dade County Product Control Approved", unless otherwise noted herein.

RENEWAL of this NOA shall be considered after a renewal application has been filed and there has been no change in the applicable building code negatively affecting the performance of this product.

TERMINATION of this NOA will occur after the expiration date or if there has been a revision or change in the materials, use, and/or manufacture of the product or process. Misuse of this NOA as an endorsement of any product, for sales, advertising or any other purposes shall automatically terminate this NOA. Failure to comply with any section of this NOA shall be cause for termination and removal of NOA.

ADVERTISEMENT: The NOA number preceded by the words Miami-Dade County, Florida, and followed by the expiration date may be displayed in advertising literature. If any portion of the NOA is displayed, then it shall be done in its entirety.

INSPECTION: A copy of this entire NOA shall be provided to the user by the manufacturer or its distributors and shall be available for inspection at the job site at the request of the Building Official.

This NOA consists of this page 1 and evidence page E-1, as well as approval document mentioned above.

The submitted documentation was reviewed by **Manuel Perez, P.E.**

MIAMI-DADE COUNTY APPROVED

8/31/12

Enviralum Industries, Inc.

NOTICE OF ACCEPTANCE: EVIDENCE SUBMITTED

A. DRAWINGS

1. Manufacturer's die drawings and sections.
2. Drawing No. **W12-29**, titled "Series ENV-450 Alum Window Wall Sys. (L.M.I.)" sheets 1 through 12 of 12, dated 06/04/12, with revision a dated 08/22/12, prepared by Al-Farooq Corporation, signed and sealed by Javad Ahmad, P.E.

B. TESTS

1. Test reports on: 1) Air Infiltration Test, per FBC, TAS 202-94
   2) Uniform Static Air Pressure Test, Loading per FBC TAS 202-94
   3) Water Resistance Test, per FBC, TAS 202-94
   4) Large Missile Impact Test per FBC, TAS 201-94
   5) Cyclic Wind Pressure Loading per FBC, TAS 203-94
   6) Drop Test per ANSI Z97.1-2009

   along with marked-up drawings and installation diagram of an aluminum window wall system, prepared by Fenestration Testing Laboratory, Inc., Test Report No. **FTL-6678**, dated 03/20/12, and addendum letter dated 08/23/12, all signed and sealed by Marlin D. Brinson, P.E.

C. CALCULATIONS

1. Anchor verification calculations and structural analysis, complying with FBC–2010, prepared by Al–Farooq Corporation, dated 06/13/12 and 08/30/12, signed and sealed by Javad Ahmad, P.E.
2. Glazing complies with ASTM E1300-04

D. QUALITY ASSURANCE

1. Miami-Dade Department of Permitting, Environment, and Regulatory Affairs (PERA)

E. MATERIAL CERTIFICATIONS

1. Notice of Acceptance No. **11–0624.02** issued to **E.I. DuPont DeNemours & Co.**, Inc. for their "**DuPont SentryGlas® Interlayer**" dated 08/25/11, expiring on 01/14/17.
2. Notice of Acceptance No. **11–0624.01** issued to **E.I. DuPont DeNemours & Co., Inc.** for their **"DuPont Butacite® PVB Interlayer"** dated 09/08/11, expiring on 12/11/16.

F. STATEMENTS

1. Statement letter of conformance, complying with FBC-2010, and of no financial interest, dated June 09, 2012, issued by Al–Farooq Corporation, signed and sealed by Javad Ahmad, P.E.
2. Testing Proposal No. **10–1236** issued by Product Control, dated 12/20/10, revised on 01/05/11, signed by Manuel Perez, P.E.

G. OTHER

1. None.

Manuel Perez, P.E.
Product Control Examiner
NOA No. 12-0702.01
Expiration Date: September 06, 2017
Approval Date: September 06, 2012

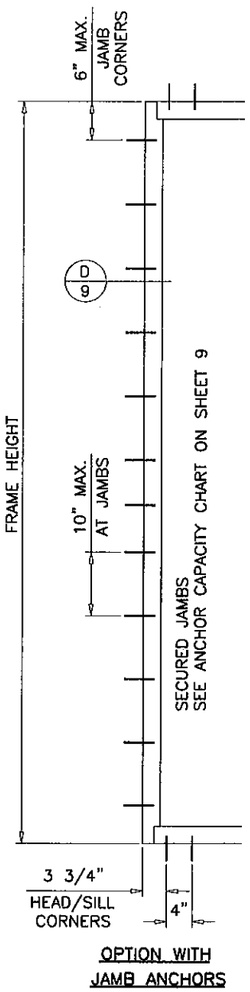

OPTION WITH JAMB ANCHORS

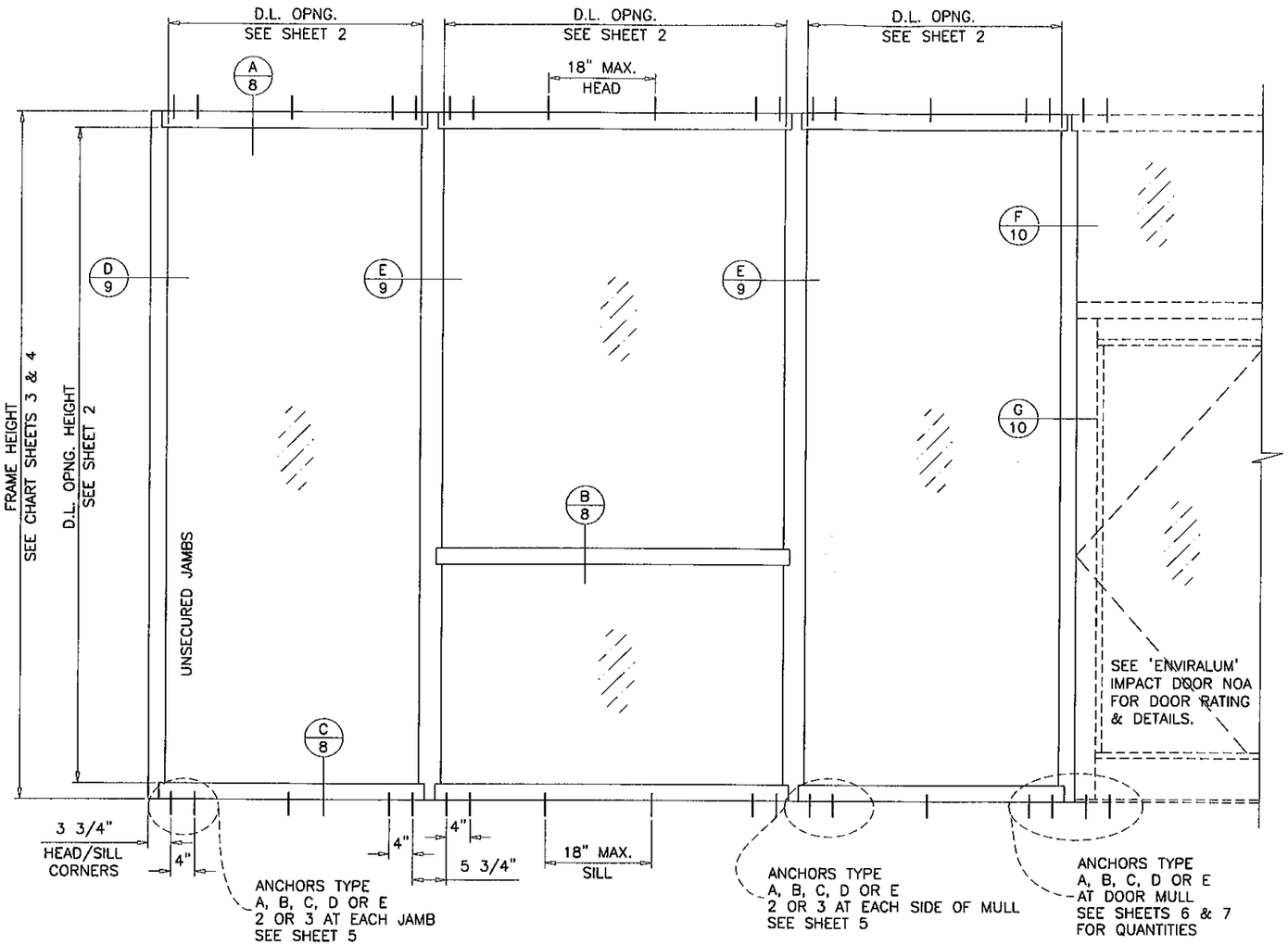

TYPICAL ELEVATIONS

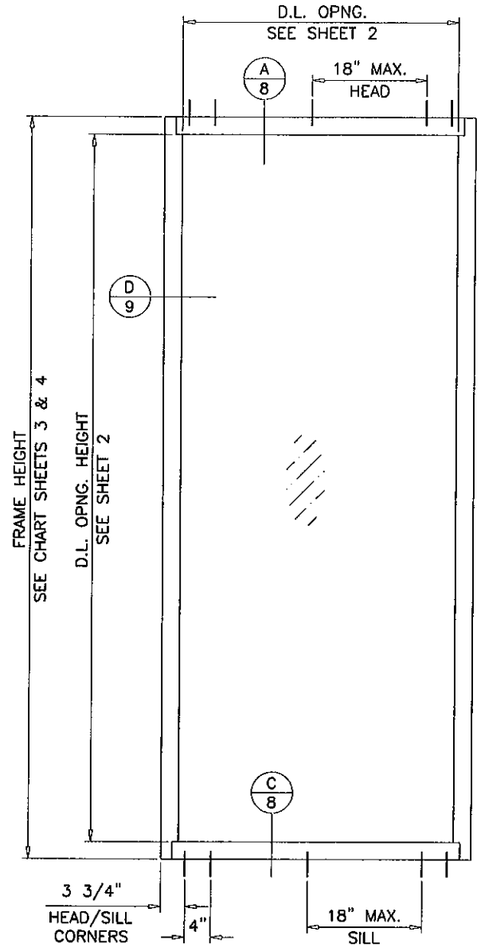

SINGLE 'O' PANEL:
FRAME WIDTH = D.L.O. WIDTH + 5.500"
FRAME HEIGHT = D.L.O. HEIGHT + 5.500"

SERIES ENV-450 ALUMINUM WINDOWALL SYSTEM

THIS SYSTEM MAY BE USED IN CONJUNCTION WITH MIAMI-DADE COUNTY APPR'D LARGE MISSILE IMPACT RESISTANT DOORS. LOWER DESIGN PRESSURE FROM STOREFRONT OR DOOR APPROVAL WILL APPLY TO ENTIRE SYSTEM.

CODE REQUIREMENTS FOR SAFEGUARDS MUST BE OBSERVED.

THIS PRODUCT HAS BEEN DESIGNED AND TESTED TO COMPLY WITH THE REQUIREMENTS OF THE FLORIDA BUILDING CODE INCLUDING HIGH VELOCITY HURRICANE ZONE (HVHZ).

WOOD BUCKS BY OTHERS, MUST BE ANCHORED PROPERLY TO TRANSFER LOADS TO THE STRUCTURE.

ANCHORS SHALL BE AS LISTED, SPACED AS SHOWN ON DETAILS, ANCHORS EMBEDMENT TO BASE MATERIAL SHALL BE BEYOND WALL DRESSING OR STUCCO.

ANCHORING OR LOADING CONDITIONS NOT SHOWN IN THESE DETAILS ARE NOT PART OF THIS APPROVAL.

A LOAD DURATION INCREASE IS USED IN DESIGN OF ANCHORS INTO WOOD ONLY.

MATERIALS INCLUDING BUT NOT LIMITED TO STEEL/METAL SCREWS, THAT COME INTO CONTACT WITH OTHER DISSIMILAR MATERIALS SHALL MEET THE REQUIREMENTS OF THE FLORIDA BLDG. CODE SECTION 2003.8.4.

INSTRUCTIONS:

USE CHARTS AS FOLLOWS.

STEP 1 DETERMINE DESIGN WIND LOAD REQUIREMENT BASED ON WIND VELOCITY, BLDG. HEIGHT, WIND ZONE USING APPLICABLE ASCE 7 STANDARD.

STEP 2 SEE CHARTS ON SHEET 2 FOR DESIGN LOAD CAPACITY OF DESIRED GLASS SIZE.

STEP 3 CHECK MULLION CAPACITY FOR A GIVEN SPACING AND HEIGHT USING CHARTS ON SHEET 3 & 4 FOR STOREFRONT MULLION AND SHEET 6 & 7 FOR DOOR MULLION. THE CAPACITY SHOULD EXCEED THE DESIGN LOAD.

STEP 4 USING CHART ON SHEETS 5 SELECT ANCHOR OPTION WITH DESIGN RATING MORE THAN DESIGN LOAD SPECIFIED IN STEP 1 ABOVE.

STEP 5 THE LOWEST VALUE RESULTING FROM STEPS 2, 3 AND 4 SHALL APPLY TO ENTIRE SYSTEM.

PRODUCT COMPLIES WITH REQUIREMENTS OF ANSI Z97.1.

THIS SYSTEM IS RATED FOR LARGE & SMALL MISSILE IMPACT.
SHUTTERS ARE NOT REQUIRED.
WINDOW WALL FRAMES MAY BE WITH OR WITHOUT THERMAL BREAK.

Engr: JAVAD AHMAD
CIVIL
FLA. PE # 70592
C.A.N. 3538

AUG 23 2012

Approved as complying with the Florida Building Code
Date Sept. 6, 2012
NOA# 12-0702.01
Miami Dade Product Control
By. Manuel Diaz

AL-FAROOQ CORPORATION
ENGINEERS & PRODUCT DEVELOPMENT
1235 S.W. 87 AVE
MIAMI, FLORIDA 33174
TEL. (305) 264-8100 FAX. (305) 262-6978

COMP-ANL\W12-29ENV

SERIES ENV-450 ALUM WINDOWALL SYS. (L.M.I.)

ENVIRALUM INDUSTRIES INC.
5110 N.W. 72 AVENUE BLDG. C
MIAMI, FL. 33166
TEL. (786) 251-0204 FAX. (305) 385-7749

revisions:

no	date	by	description
A	08.22.12		REV. PER RER COMMENTS

date: 06-04-12
scale: 1/2"=1'-0"
dr. by: HAMID
chk. by:

drawing no. W12-29

sheet 1 of 12

GLASS LOAD CAPACITY - PSF					
NOMINAL DIMS.		GLASS TYPES 'A' & 'A1'		GLASS TYPES 'B' & 'B1'	
D.L.O. WIDTH	D.L.O. HEIGHT	EXT.(+)	INT.(−)	EXT.(+)	INT.(−)
30"	78"	90.0	90.0	100.0	131.0
36"		90.0	90.0	100.0	131.0
42"		90.0	90.0	100.0	131.0
48"		90.0	90.0	100.0	131.0
54"		90.0	90.0	100.0	131.0
60"		90.0	90.0	100.0	131.0
66-1/2"		90.0	90.0	100.0	131.0
30"	84"	90.0	90.0	100.0	131.0
36"		90.0	90.0	100.0	131.0
42"		90.0	90.0	100.0	131.0
48"		90.0	90.0	100.0	131.0
54"		90.0	90.0	100.0	131.0
60"		90.0	90.0	100.0	131.0
66-1/2"		90.0	90.0	100.0	126.7
30"	90"	90.0	90.0	100.0	131.0
36"		90.0	90.0	100.0	131.0
42"		90.0	90.0	100.0	131.0
48"		90.0	90.0	100.0	131.0
54"		90.0	90.0	100.0	131.0
60"		90.0	90.0	100.0	126.0
66-1/2"		90.0	90.0	100.0	116.8
30"	96"	90.0	90.0	100.0	131.0
36"		90.0	90.0	100.0	131.0
42"		90.0	90.0	100.0	131.0
48"		90.0	90.0	100.0	131.0
54"		90.0	90.0	100.0	126.8
60"		90.0	90.0	100.0	116.4
30"	102"	90.0	90.0	100.0	131.0
36"		90.0	90.0	100.0	131.0
42"		90.0	90.0	100.0	131.0
48"		90.0	90.0	100.0	129.4
54"		90.0	90.0	100.0	118.5
60"		90.0	90.0	100.0	109.2
30"	108"	90.0	90.0	100.0	131.0
36"		90.0	90.0	100.0	131.0
42"		90.0	90.0	100.0	131.0
48"		90.0	90.0	100.0	125.6
54"		90.0	90.0	100.0	111.8
57"		90.0	90.0	100.0	106.4
30"	114"	90.0	90.0	100.0	131.0
36"		90.0	90.0	100.0	131.0
42"		90.0	90.0	100.0	131.0
48"		90.0	90.0	100.0	119.5
54"		90.0	90.0	100.0	105.6
30"	120"	90.0	90.0	100.0	131.0
36"		90.0	90.0	100.0	131.0
42"		90.0	90.0	100.0	131.0
48"		90.0	90.0	100.0	114.1
51"		90.0	90.0	100.0	106.6

GLASS LOAD CAPACITY - PSF					
NOMINAL DIMS.		GLASS TYPES 'A' & 'A1'		GLASS TYPES 'B' & 'B1'	
D.L.O. WIDTH	D.L.O. HEIGHT	EXT.(+)	INT.(−)	EXT.(+)	INT.(−)
30"	126"	90.0	90.0	100.0	131.0
36"		90.0	90.0	100.0	131.0
42"		90.0	90.0	100.0	129.7
48"		90.0	90.0	100.0	109.7
49"		90.0	90.0	100.0	107.1
30"	132"	90.0	90.0	100.0	131.0
36"		90.0	90.0	100.0	131.0
42"		90.0	90.0	100.0	128.5
47"		90.0	90.0	100.0	108.9
30"	138"	90.0	90.0	100.0	131.0
36"		90.0	90.0	100.0	131.0
42"		90.0	90.0	100.0	127.2
45"		90.0	90.0	100.0	112.5
30"	144"	90.0	90.0	100.0	131.0
36"		90.0	90.0	100.0	131.0
42"		90.0	90.0	100.0	126.1
43"		90.0	90.0	100.0	120.8

NOTE:
INTERPOLATION BETWEEN WIDTHS OR HEIGHTS ALLOWED.

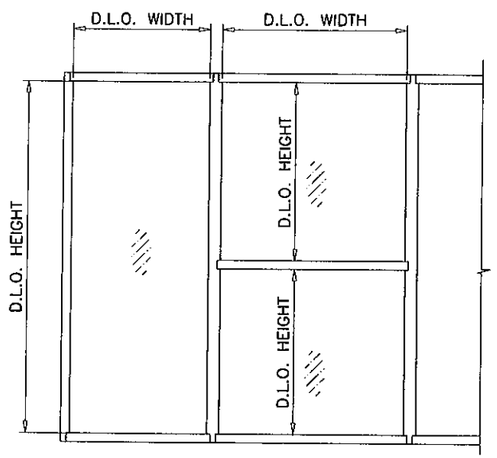

1/2" AIR SPACE CONSISTING OF:
SPACER:
ALUMINUM BOX SPACER AROUND THE PERIMETER OF THE GLASS.
PERIMETER SEALANT:
SILICONE
DOW CORNING 791
GE 2000

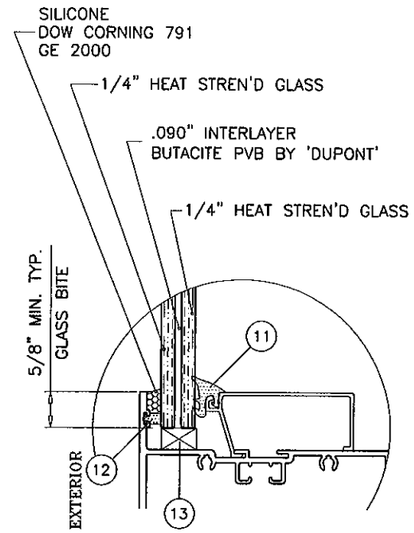

GLASS TYPE 'A'

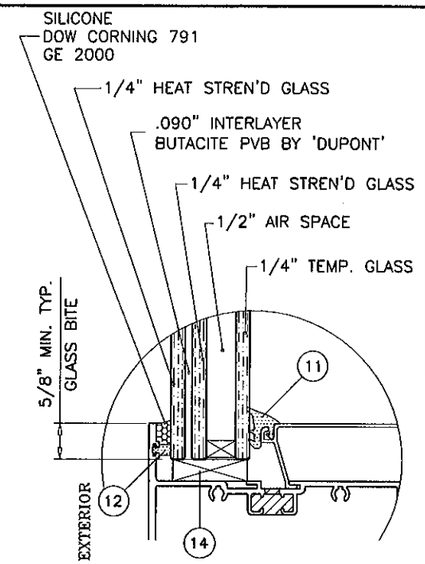

GLASS TYPE 'A1'

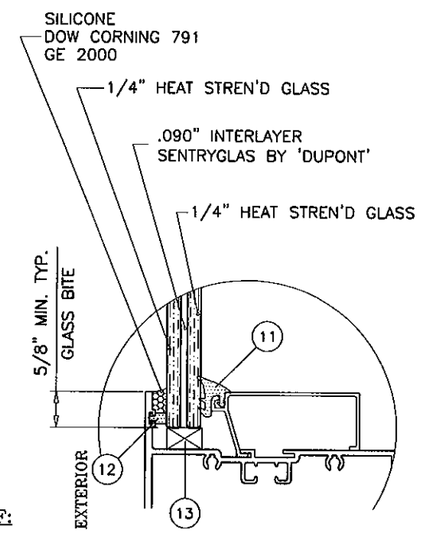

GLASS TYPE 'B'

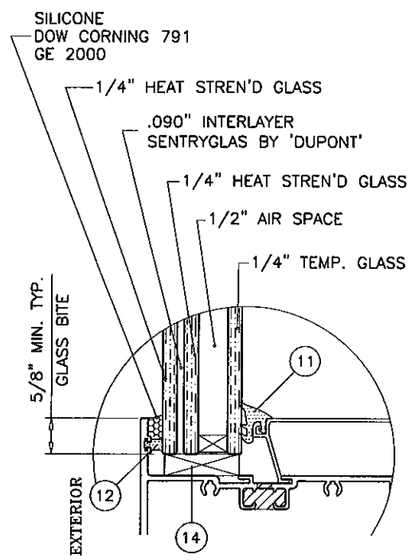

GLASS TYPE 'B1'

GLAZING OPTIONS

NOTE:
GLASS CAPACITIES ON THIS SHEET ARE BASED ON ASTM E1300-04 (3 SEC. GUSTS).

GLASS

Engr: JAVAD AHMAD
CIVIL
FLA. PE. # 70592
C.A.N. 3538
AUG 2 3 2012

Approved as complying with the Florida Building Code
Date Sept. 6, 2012
NOA# 12-0702.01
Miami Dade Product Control
By Manuel Diaz

AL-FAROOQ CORPORATION
ENGINEERS & PRODUCT DEVELOPMENT
1235 S.W. 87 AVE
MIAMI, FLORIDA 33174
TEL (305) 264-8100 FAX. (305) 262-6978

COMP-ANL\W12-29ENV

SERIES ENV-450 ALUM WINDOWALL SYS. (L.M.I.)

ENVIRALUM INDUSTRIES INC.
5110 N.W. 72 AVENUE BLDG. C
MIAMI, FL. 33166
TEL. (786) 251-0204 FAX. (305) 385-7749

revisions:

no	date	by	description
A	08.22.12		REV. PER RER COMMENTS

date: 06-04-12
scale: 3/8" = 1"
dr. by: HAMID
chk. by:

drawing no.
W12-29

DESIGN LOAD CAPACITY – PSF
UNSECURED JAMB/MULLION WITHOUT INTERMEDIATE HORIZONTALS

NOMINAL DIMS.		JAMB 'J1' MULLION 'M1'		JAMB 'J2' MULLION 'M2'		JAMB 'J3' MULL 'M3'		JAMB 'J4' MULL 'M4'	
WIDTH (W)	FRAME HEIGHT	EXT.(+)	INT.(–)	EXT.(+)	INT.(–)	EXT.(+)	INT.(–)	EXT.(+)	INT.(–)
30"	72"	80.0	80.0	85.0	85.0	90.0	90.0	100.0	131.0
36"		80.0	80.0	85.0	85.0	90.0	90.0	100.0	131.0
42"		80.0	80.0	85.0	85.0	90.0	90.0	100.0	131.0
48"		80.0	80.0	85.0	85.0	90.0	90.0	100.0	131.0
54"		80.0	80.0	85.0	85.0	90.0	90.0	100.0	131.0
60"		80.0	80.0	85.0	85.0	90.0	90.0	100.0	131.0
66"		–	–	85.0	85.0	90.0	90.0	100.0	131.0
72"		–	–	85.0	85.0	90.0	90.0	100.0	131.0
30"	78"	80.0	80.0	85.0	85.0	90.0	90.0	100.0	131.0
36"		80.0	80.0	85.0	85.0	90.0	90.0	100.0	131.0
42"		80.0	80.0	85.0	85.0	90.0	90.0	100.0	131.0
48"		80.0	80.0	85.0	85.0	90.0	90.0	100.0	131.0
54"		80.0	80.0	85.0	85.0	90.0	90.0	100.0	131.0
60"		–	–	85.0	85.0	90.0	90.0	100.0	131.0
30"	84"	80.0	80.0	85.0	85.0	90.0	90.0	100.0	131.0
36"		80.0	80.0	85.0	85.0	90.0	90.0	100.0	131.0
42"		80.0	80.0	85.0	85.0	90.0	90.0	100.0	131.0
48"		80.0	80.0	85.0	85.0	90.0	90.0	100.0	131.0
54"		80.0	80.0	85.0	85.0	90.0	90.0	100.0	131.0
60"		–	–	85.0	85.0	90.0	90.0	100.0	131.0
30"	90"	80.0	80.0	85.0	85.0	90.0	90.0	100.0	131.0
36"		80.0	80.0	85.0	85.0	90.0	90.0	100.0	131.0
42"		80.0	80.0	85.0	85.0	90.0	90.0	100.0	131.0
48"		80.0	80.0	85.0	85.0	90.0	90.0	100.0	131.0
54"		–	–	85.0	85.0	90.0	90.0	100.0	131.0
60"		–	–	–	–	90.0	90.0	100.0	131.0
30"	96"	80.0	80.0	85.0	85.0	90.0	90.0	100.0	131.0
36"		80.0	80.0	85.0	85.0	90.0	90.0	100.0	131.0
42"		80.0	80.0	85.0	85.0	90.0	90.0	100.0	131.0
48"		80.0	80.0	85.0	85.0	90.0	90.0	100.0	131.0
54"		–	–	85.0	85.0	90.0	90.0	100.0	131.0
60"		–	–	–	–	90.0	90.0	100.0	131.0
30"	102"	–	–	85.0	85.0	90.0	90.0	100.0	131.0
36"		–	–	85.0	85.0	90.0	90.0	100.0	131.0
42"		–	–	85.0	85.0	90.0	90.0	100.0	131.0
48"		–	–	85.0	85.0	90.0	90.0	100.0	131.0
54"		–	–	–	–	90.0	90.0	100.0	125.1
30"	108"	–	–	85.0	85.0	90.0	90.0	100.0	131.0
36"		–	–	85.0	85.0	90.0	90.0	100.0	131.0
42"		–	–	85.0	85.0	90.0	90.0	100.0	131.0
48"		–	–	85.0	85.0	90.0	90.0	100.0	121.9
54"		–	–	–	–	90.0	90.0	100.0	110.4
30"	114"	–	–	–	–	90.0	90.0	100.0	131.0
36"		–	–	–	–	90.0	90.0	100.0	131.0
42"		–	–	–	–	90.0	90.0	100.0	122.4
48"		–	–	–	–	90.0	90.0	100.0	108.6
54"		–	–	–	–	–	–	65.0	65.0
30"	120"	–	–	–	–	90.0	90.0	100.0	131.0
36"		–	–	–	–	90.0	90.0	100.0	126.9
42"		–	–	–	–	90.0	90.0	100.0	110.0
48"		–	–	–	–	87.9	87.9	97.4	97.4
54"		–	–	–	–	–	–	65.0	65.0
30"	126"	–	–	–	–	–	–	65.0	65.0
36"		–	–	–	–	–	–	65.0	65.0
42"		–	–	–	–	–	–	65.0	65.0
48"		–	–	–	–	–	–	65.0	65.0
54"		–	–	–	–	–	–	65.0	65.0
30"	132"	–	–	–	–	–	–	65.0	65.0
36"		–	–	–	–	–	–	65.0	65.0
42"		–	–	–	–	–	–	65.0	65.0
48"		–	–	–	–	–	–	65.0	65.0

DESIGN LOAD CAPACITY – PSF
UNSECURED JAMB/MULLION WITHOUT INTERMEDIATE HORIZONTALS

NOMINAL DIMS.		JAMB 'J1' MULLION 'M1'		JAMB 'J2' MULLION 'M2'		JAMB 'J3' MULL 'M3'		JAMB 'J4' MULL 'M4'	
WIDTH (W)	FRAME HEIGHT	EXT.(+)	INT.(–)	EXT.(+)	INT.(–)	EXT.(+)	INT.(–)	EXT.(+)	INT.(–)
30"	138"	–	–	–	–	–	–	65.0	65.0
36"		–	–	–	–	–	–	65.0	65.0
42"		–	–	–	–	–	–	65.0	65.0
48"		–	–	–	–	–	–	65.0	65.0
30"	144"	–	–	–	–	–	–	65.0	65.0
36"		–	–	–	–	–	–	65.0	65.0
42"		–	–	–	–	–	–	65.0	65.0
48"		–	–	–	–	–	–	65.0	65.0

FOR SECURED JAMBS CONDITION
SEE SHEET 9 OF 12.

UNSECURED JAMBS

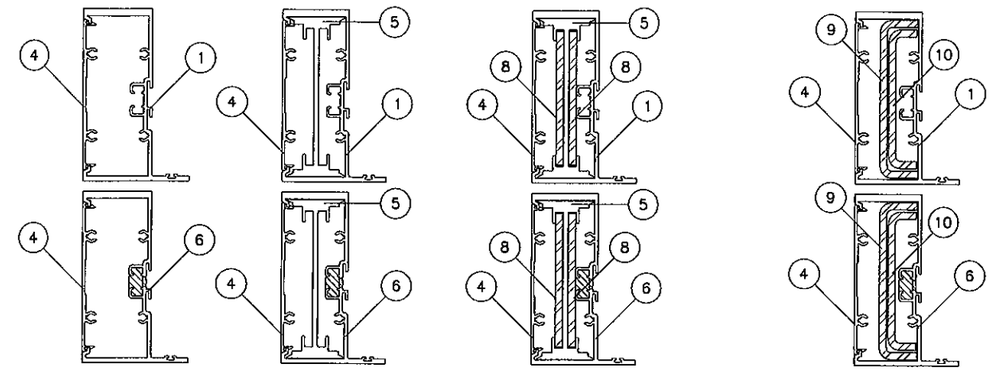

JAMB 'J1'

Ix IN^4	Sx IN^3
4.5110	1.9537

JAMB 'J2'

Ix IN^4	Sx IN^3
6.2170	2.6925

JAMB 'J3'

	Ix IN^4	Sx IN^3
ALUMINUM	6.2170	2.6925
STEEL	1.3650	.7746
TOTAL Ix ALUM + Ix STL X 2.9	10.1755	

JAMB 'J4'

	Ix IN^4	Sx IN^3
ALUMINUM	4.5110	1.9537
STEEL	3.5210	1.7072
TOTAL Ix ALUM + Ix STL X 2.9	14.7219	

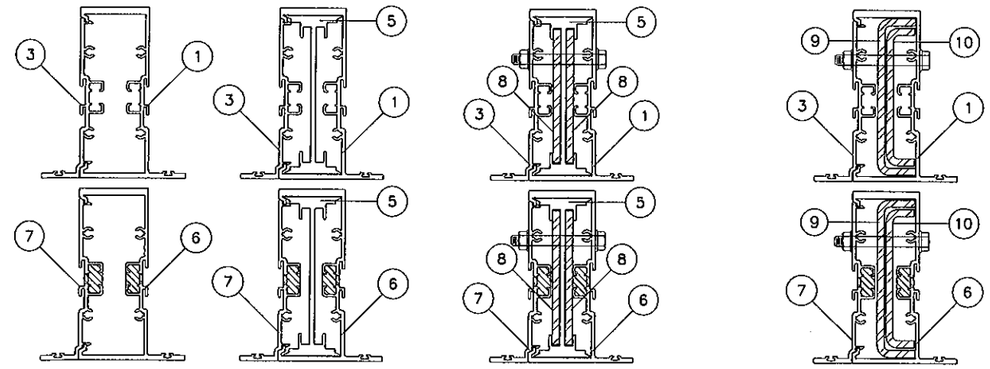

MULLION 'M1'

Ix IN^4	Sx IN^3
5.1380	2.1170

MULLION 'M2'

Ix IN^4	Sx IN^3
7.8700	3.2427

MULLION 'M3'

	Ix IN^4	Sx IN^3
ALUMINUM	7.8700	3.2427
STEEL	1.3650	.7746
TOTAL Ix ALUM + Ix STL X 2.9	11.8285	

MULLION 'M4'

	Ix IN^4	Sx IN^3
ALUMINUM	5.1380	2.1170
STEEL	3.5210	1.7072
TOTAL Ix ALUM + Ix STL X 2.9	15.3489	

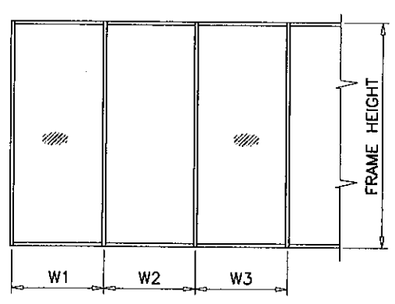

WIDTH (W) = W1
AT FRAME JAMB

WIDTH (W) = $\frac{W2 + W3}{2}$
AT FRAME MULLION

MULLIONS

Engr: JAVAD AHMAD
CIVIL
FLA. PE # 70592
C.A.N. 3538

AUG 2 9 2012

Approved as complying with the Florida Building Code
Date Sept. 6, 2012
NOA# 12-0702.01
Miami Dade Product Control
By Manuel Perez

AL-FAROOQ CORPORATION
ENGINEERS & PRODUCT DEVELOPMENT
1235 S.W. 87 AVE
MIAMI, FLORIDA 33174
TEL. (305) 264-8100 FAX. (305) 262-6978
COMP-ANL\W12-29ENV

SERIES ENV-450 ALUM WINDOWALL SYS. (L.M.I.)

ENVIRALUM INDUSTRIES INC.
5110 N.W. 72 AVENUE BLDG. C
MIAMI, FL. 33166
TEL. (786) 251-0204 FAX. (305) 385-7749

revisions:

no	date	by	description
A	08.22.12	RER	REV. PER COMMENTS

date: 06-04-12
scale: –
dr. by: HAMID
chk. by:

drawing no.
W12-29

DESIGN LOAD CAPACITY – PSF
UNSECURED JAMB/MULLION WITH INTERMEDIATE HORIZONTALS

NOMINAL DIMS.		JAMB 'J1' MULLION 'M1'		JAMB 'J2' MULLION 'M2'		JAMB 'J3' MULL 'M3'		JAMB 'J4' MULL 'M4'	
WIDTH (W)	FRAME HEIGHT	EXT.(+)	INT.(–)	EXT.(+)	INT.(–)	EXT.(+)	INT.(–)	EXT.(+)	INT.(–)
30"	72"	80.0	80.0	85.0	85.0	90.0	90.0	100.0	131.0
36"		80.0	80.0	85.0	85.0	90.0	90.0	100.0	131.0
42"		80.0	80.0	85.0	85.0	90.0	90.0	100.0	131.0
48"		80.0	80.0	85.0	85.0	90.0	90.0	100.0	131.0
54"		80.0	80.0	85.0	85.0	90.0	90.0	100.0	131.0
60"		80.0	80.0	85.0	85.0	90.0	90.0	100.0	131.0
66"		–	–	85.0	85.0	90.0	90.0	100.0	131.0
72"		–	–	85.0	85.0	90.0	90.0	100.0	131.0
30"	78"	80.0	80.0	85.0	85.0	90.0	90.0	100.0	131.0
36"		80.0	80.0	85.0	85.0	90.0	90.0	100.0	131.0
42"		80.0	80.0	85.0	85.0	90.0	90.0	100.0	131.0
48"		80.0	80.0	85.0	85.0	90.0	90.0	100.0	131.0
54"		80.0	80.0	85.0	85.0	90.0	90.0	100.0	131.0
60"		–	–	85.0	85.0	90.0	90.0	100.0	131.0
30"	84"	80.0	80.0	85.0	85.0	90.0	90.0	100.0	131.0
36"		80.0	80.0	85.0	85.0	90.0	90.0	100.0	131.0
42"		80.0	80.0	85.0	85.0	90.0	90.0	100.0	131.0
48"		80.0	80.0	85.0	85.0	90.0	90.0	100.0	131.0
54"		80.0	80.0	85.0	85.0	90.0	90.0	100.0	131.0
60"		–	–	85.0	85.0	90.0	90.0	100.0	131.0
30"	90"	80.0	80.0	85.0	85.0	90.0	90.0	100.0	131.0
36"		80.0	80.0	85.0	85.0	90.0	90.0	100.0	131.0
42"		80.0	80.0	85.0	85.0	90.0	90.0	100.0	131.0
48"		80.0	80.0	85.0	85.0	90.0	90.0	100.0	131.0
54"		–	–	85.0	85.0	90.0	90.0	100.0	131.0
60"		–	–	–	–	90.0	90.0	100.0	131.0
30"	96"	80.0	80.0	85.0	85.0	90.0	90.0	100.0	131.0
36"		80.0	80.0	85.0	85.0	90.0	90.0	100.0	131.0
42"		80.0	80.0	85.0	85.0	90.0	90.0	100.0	131.0
48"		74.3	74.3	85.0	85.0	90.0	90.0	100.0	131.0
54"		–	–	85.0	85.0	90.0	90.0	100.0	128.3
60"		–	–	–	–	90.0	90.0	100.0	115.5
30"	102"	–	–	85.0	85.0	90.0	90.0	100.0	131.0
36"		–	–	85.0	85.0	90.0	90.0	100.0	131.0
42"		–	–	85.0	85.0	90.0	90.0	100.0	131.0
48"		–	–	85.0	85.0	90.0	90.0	100.0	127.9
54"		–	–	–	–	90.0	90.0	100.0	113.7
30"	108"	–	–	85.0	85.0	90.0	90.0	100.0	131.0
36"		–	–	85.0	85.0	90.0	90.0	100.0	131.0
42"		–	–	85.0	85.0	90.0	90.0	100.0	130.3
48"		–	–	85.0	85.0	90.0	90.0	100.0	114.1
54"		–	–	–	–	90.0	90.0	100.0	101.4
30"	114"	–	–	–	–	90.0	90.0	100.0	131.0
36"		–	–	–	–	90.0	90.0	100.0	131.0
42"		–	–	–	–	90.0	90.0	100.0	117.0
48"		–	–	–	–	90.0	90.0	100.0	102.4
54"		–	–	–	–	–	–	65.0	65.0
30"	120"	–	–	–	–	90.0	90.0	100.0	131.0
36"		–	–	–	–	90.0	90.0	100.0	123.2
42"		–	–	–	–	90.0	90.0	100.0	105.6
48"		–	–	–	–	83.3	83.3	92.4	92.4
54"		–	–	–	–	–	–	65.0	65.0
30"	126"	–	–	–	–	–	–	65.0	65.0
36"		–	–	–	–	–	–	65.0	65.0
42"		–	–	–	–	–	–	65.0	65.0
48"		–	–	–	–	–	–	65.0	65.0
54"		–	–	–	–	–	–	65.0	65.0
30"	132"	–	–	–	–	–	–	65.0	65.0
36"		–	–	–	–	–	–	65.0	65.0
42"		–	–	–	–	–	–	65.0	65.0
48"		–	–	–	–	–	–	65.0	65.0

DESIGN LOAD CAPACITY – PSF
UNSECURED JAMB/MULLION WITH INTERMEDIATE HORIZONTALS

NOMINAL DIMS.		JAMB 'J1' MULLION 'M1'		JAMB 'J2' MULLION 'M2'		JAMB 'J3' MULL 'M3'		JAMB 'J4' MULL 'M4'	
WIDTH (W)	FRAME HEIGHT	EXT.(+)	INT.(–)	EXT.(+)	INT.(–)	EXT.(+)	INT.(–)	EXT.(+)	INT.(–)
30"	138"	–	–	–	–	–	–	65.0	65.0
36"		–	–	–	–	–	–	65.0	65.0
42"		–	–	–	–	–	–	65.0	65.0
48"		–	–	–	–	–	–	65.0	65.0
30"	144"	–	–	–	–	–	–	65.0	65.0
36"		–	–	–	–	–	–	65.0	65.0
42"		–	–	–	–	–	–	65.0	65.0
48"		–	–	–	–	–	–	64.2	64.2

FOR SECURED JAMBS CONDITION
SEE SHEET 9 OF 12.

UNSECURED JAMBS

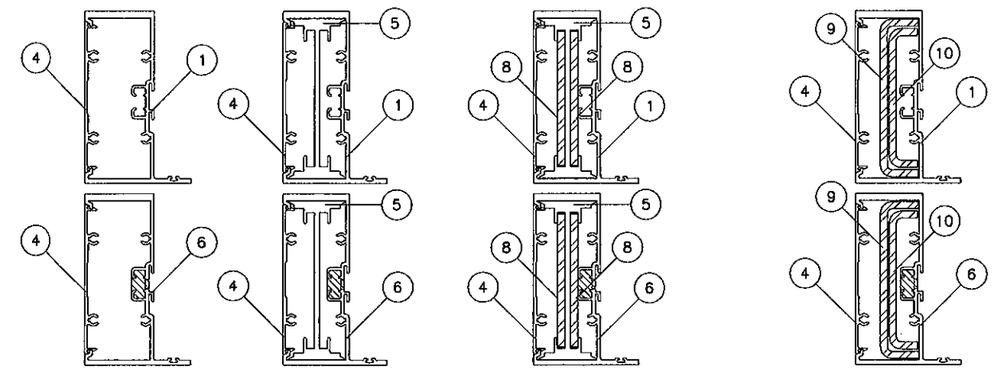

JAMB 'J1'

Ix IN^4	Sx IN^3
4.5110	1.9537

JAMB 'J2'

Ix IN^4	Sx IN^3
6.2170	2.6925

JAMB 'J3'

	Ix IN^4	Sx IN^3
ALUMINUM	6.2170	2.6925
STEEL	1.3650	.7746
TOTAL Ix ALUM + Ix STL X 2.9	10.1755	

JAMB 'J4'

	Ix IN^4	Sx IN^3
ALUMINUM	4.5110	1.9537
STEEL	3.5210	1.7072
TOTAL Ix ALUM + Ix STL X 2.9	14.7219	

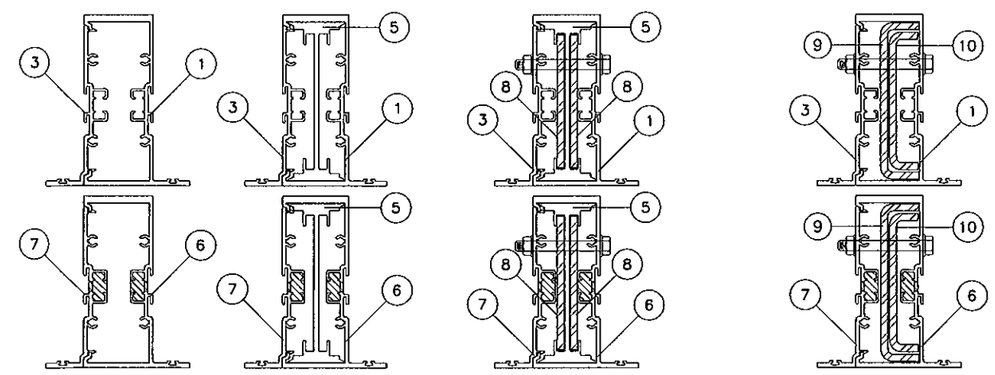

MULLION 'M1'

Ix IN^4	Sx IN^3
5.1380	2.1170

MULLION 'M2'

Ix IN^4	Sx IN^3
7.8700	3.2427

MULLION 'M3'

	Ix IN^4	Sx IN^3
ALUMINUM	7.8700	3.2427
STEEL	1.3650	.7746
TOTAL Ix ALUM + Ix STL X 2.9	11.8285	

MULLION 'M4'

	Ix IN^4	Sx IN^3
ALUMINUM	5.1380	2.1170
STEEL	3.5210	1.7072
TOTAL Ix ALUM + Ix STL X 2.9	15.3489	

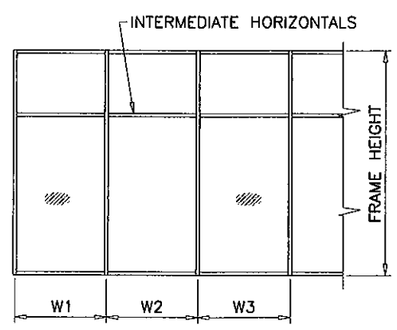

WIDTH (W) = W1
AT FRAME JAMB

WIDTH (W) = $\frac{W2 + W3}{2}$
AT FRAME MULLION

MULLIONS

Engr: JAVAD AHMAD
CIVIL
FLA. PE # 70592
C.A.N. 3038
AUG 23 2012

Approved as complying with the Florida Building Code
Date Sept. 6, 2012
NOA# 12L-0702.01
Miami Dade Product Control
By Maurel Cruz

AL-FAROOQ CORPORATION
ENGINEERS & PRODUCT DEVELOPMENT
1235 S.W. 87 AVE
MIAMI, FLORIDA 33174
TEL. (305) 264-8100 FAX. (305) 262-6978

COMP-ANL\W12-29ENV

SERIES ENV-450 ALUM WINDOWALL SYS. (L.M.I.)

ENVIRALUM INDUSTRIES INC.
5110 N.W. 72 AVENUE BLDG. C
MIAMI, FL. 33166
TEL. (786) 251-0204 FAX. (305) 385-7749

revisions:			
no	date	by	description
A	08.22.12		REV. PER RER COMMENTS

date: 06-04-12
scale: –
dr. by: HAMID
chk. by:

drawing no.
W12-29

ANCHOR LOAD CAPACITY – PSF EXT.(+) & INT.(–)									
NOMINAL DIMS.		ANCHORS 'A' & 'B'		ANCHORS TYPE 'C'		ANCHORS TYPE 'D'		ANCHORS TYPE 'E'	
WIDTH (W)	FRAME HEIGHT	A2/B2	A3/B3	C2	C3	D2	D3	E2	E3
30"	72"	114.3	131.0	131.0	131.0	131.0	131.0	131.0	131.0
36"		95.2	131.0	128.0	131.0	131.0	131.0	110.7	131.0
42"		81.6	122.5	109.7	131.0	131.0	131.0	94.9	131.0
48"		71.4	107.2	96.0	131.0	131.0	131.0	83.0	124.5
54"		63.5	95.3	85.3	128.0	117.9	131.0	73.8	110.7
60"		57.1	85.7	76.8	115.2	106.1	131.0	66.4	99.6
66"		51.9	77.9	69.8	104.7	96.4	131.0	60.4	90.5
72"		47.6	71.4	64.0	96.0	88.4	131.0	55.3	83.0
30"	78"	105.5	131.0	131.0	131.0	131.0	131.0	122.6	131.0
36"		87.9	131.0	118.2	131.0	131.0	131.0	102.2	131.0
42"		75.3	113.1	101.3	131.0	131.0	131.0	87.6	131.0
48"		65.9	98.9	88.6	131.0	122.4	131.0	76.6	114.9
54"		58.6	87.9	78.8	118.2	108.8	131.0	68.1	102.2
60"		52.7	79.1	70.9	106.3	97.9	131.0	61.3	91.9
30"	84"	97.9	131.0	131.0	131.0	131.0	131.0	113.8	131.0
36"		81.6	122.5	109.7	131.0	131.0	131.0	94.9	131.0
42"		70.0	105.0	94.0	131.0	129.9	131.0	81.3	122.0
48"		61.2	91.9	82.3	123.4	113.6	131.0	71.1	106.7
54"		54.4	81.7	73.1	109.7	101.0	131.0	63.2	94.9
60"		49.0	73.5	65.8	98.7	90.9	131.0	56.9	85.4
30"	90"	91.4	131.0	122.9	131.0	131.0	131.0	106.2	131.0
36"		76.2	114.3	102.4	131.0	131.0	131.0	88.5	131.0
42"		65.3	98.0	87.8	131.0	121.2	131.0	75.9	113.8
48"		57.1	85.7	76.8	115.2	106.1	131.0	66.4	99.6
54"		50.8	76.2	68.3	102.4	94.3	131.0	59.0	88.5
60"		45.7	68.6	61.4	92.2	84.9	127.3	53.1	79.7
30"	96"	85.7	128.6	115.2	131.0	131.0	131.0	99.6	131.0
36"		71.4	107.2	96.0	131.0	131.0	131.0	83.0	124.5
42"		61.2	91.9	82.3	123.4	113.6	131.0	71.1	106.7
48"		53.6	80.4	72.0	108.0	99.4	131.0	62.3	93.4
54"		47.6	71.4	64.0	96.0	88.4	131.0	55.3	83.0
60"		42.9	64.3	57.6	86.4	79.6	119.3	49.8	74.7
30"	102"	80.7	121.0	108.4	131.0	131.0	131.0	93.7	131.0
36"		67.2	100.9	90.4	131.0	124.8	131.0	78.1	117.2
42"		57.6	86.5	77.4	116.2	107.0	131.0	67.0	100.4
48"		50.4	75.6	67.8	101.6	93.6	131.0	58.6	87.9
54"		44.8	67.2	60.2	90.4	83.2	124.8	52.1	78.1
60"		40.3	60.5	54.2	81.3	74.9	112.3	46.9	70.3
30"	108"	76.2	114.3	102.4	131.0	131.0	131.0	88.5	131.0
36"		63.5	95.3	85.3	128.0	117.9	131.0	73.8	110.7
42"		54.4	81.7	73.1	109.7	101.0	131.0	63.2	94.9
48"		47.6	71.4	64.0	96.0	88.4	131.0	55.3	83.0
54"		42.3	63.5	56.9	85.3	78.6	117.8	49.2	73.8
60"		38.1	57.2	51.2	76.8	70.7	106.0	44.3	66.4
30"	114"	72.2	108.3	97.0	131.0	131.0	131.0	83.9	125.8
36"		60.1	90.2	80.8	121.3	111.6	131.0	69.9	104.8
42"		51.5	77.4	69.3	103.9	95.7	131.0	59.9	89.9
48"		45.1	67.7	60.6	90.9	83.7	125.6	52.4	78.6
54"		40.1	60.2	53.9	80.8	74.4	111.6	46.6	69.9
60"		36.1	54.1	48.5	72.8	67.0	100.5	41.9	62.9
30"	120"	68.6	102.9	92.2	131.0	127.3	131.0	79.7	119.5
36"		57.1	85.7	76.8	115.2	106.1	131.0	66.4	99.6
42"		49.0	73.5	65.8	98.7	90.9	131.0	56.9	85.4
48"		42.9	64.3	57.6	86.4	79.6	119.3	49.8	74.7
54"		38.1	57.2	51.2	76.8	70.7	106.0	44.3	66.4
30"	126"	65.3	98.0	87.8	131.0	121.2	131.0	75.9	113.8
36"		54.4	81.7	73.1	109.7	101.0	131.0	63.2	94.9
42"		46.6	70.0	62.7	94.0	86.6	129.9	54.2	81.3
48"		40.8	61.2	54.9	82.3	75.8	113.6	47.4	71.1
54"		36.3	54.4	48.8	73.1	67.3	101.0	42.2	63.2
30"	132"	62.3	93.5	83.8	125.7	115.7	131.0	72.4	108.7
36"		51.9	77.9	69.8	104.7	96.4	131.0	60.4	90.5
42"		44.5	66.8	59.8	89.8	82.6	123.9	51.7	77.6
48"		39.0	58.5	52.4	78.5	72.3	108.5	45.3	67.9

ANCHOR LOAD CAPACITY – PSF EXT.(+) & INT.(–)									
NOMINAL DIMS.		ANCHORS 'A' & 'B'		ANCHORS TYPE 'C'		ANCHORS TYPE 'D'		ANCHORS TYPE 'E'	
WIDTH (W)	FRAME HEIGHT	A2/B2	A3/B3	C2	C3	D2	D3	E2	E3
30"	138"	59.6	89.5	80.1	120.2	110.7	131.0	69.3	103.9
36"		49.7	74.6	66.8	100.2	92.2	131.0	57.7	86.6
42"		42.6	63.9	57.2	85.9	79.1	118.6	49.5	74.2
48"		37.3	55.9	50.1	75.1	69.2	103.7	43.3	65.0
30"	144"	57.1	85.7	76.8	115.2	106.1	131.0	66.4	99.6
36"		47.6	71.4	64.0	96.0	88.4	131.0	55.3	83.0
42"		40.8	61.2	54.9	82.3	75.8	113.6	47.4	71.1
48"		35.7	53.6	48.0	72.0	66.3	99.4	41.5	62.3

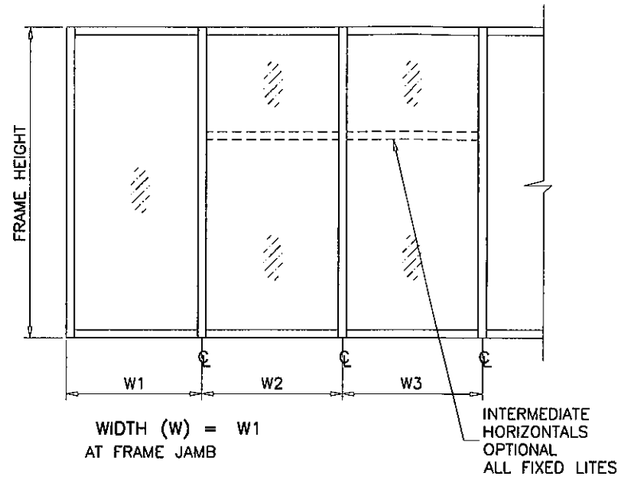

WIDTH (W) = W1
AT FRAME JAMB

WIDTH (W) = $\frac{W2 + W3}{2}$
AT FRAME MULLION

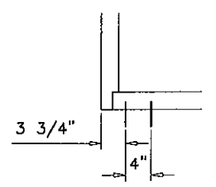

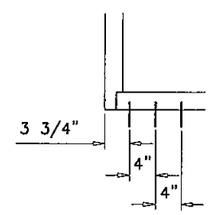

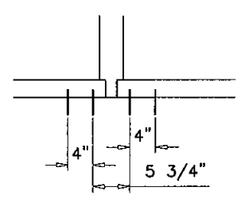

A2, B2, C2, D2, E2

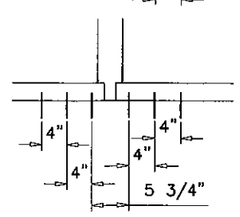

A3, B3, C3, D3, E3

ANCHORS TYPES:

A2 = (2) ANCHORS TYPE 'A' AT EACH SIDE OF JAMB AND MULLION
B2 = (2) ANCHORS TYPE 'B' AT EACH SIDE OF JAMB AND MULLION
C2 = (2) ANCHORS TYPE 'C' AT EACH SIDE OF JAMB AND MULLION
D2 = (2) ANCHORS TYPE 'D' AT EACH SIDE OF JAMB AND MULLION
E2 = (2) ANCHORS TYPE 'E' AT EACH SIDE OF JAMB AND MULLION

A3 = (3) ANCHORS TYPE 'A' AT EACH SIDE OF JAMB AND MULLION
B3 = (3) ANCHORS TYPE 'B' AT EACH SIDE OF JAMB AND MULLION
C3 = (3) ANCHORS TYPE 'C' AT EACH SIDE OF JAMB AND MULLION
D3 = (3) ANCHORS TYPE 'D' AT EACH SIDE OF JAMB AND MULLION
E3 = (3) ANCHORS TYPE 'E' AT EACH SIDE OF JAMB AND MULLION

WOOD BUCKS AND METAL STRUCTURE NOT BY ENVIRALUM MUST SUSTAIN LOADS IMPOSED BY GLAZING SYSTEM AND TRANSFER THEM TO THE BUILDING STRUCTURE.

TYPICAL ANCHORS: SEE ELEV. FOR SPACING

TYPE 'A'– 1/4" DIA ULTRACON BY 'ELCO' (Fu=177 KSI, Fy=155 KSI)
INTO 2BY WOOD BUCKS OR WOOD STRUCTURES
WITH 1–1/2" MIN. PENETRATION INTO WOOD

THRU 1BY WOOD BUCKS INTO CONCRETE
WITH 1–1/4" MIN. EMBED INTO CONCRETE

TYPE 'B'– 1/4" DIA ULTRACON BY 'ELCO' (Fu=177 KSI, Fy=155 KSI)
DIRECTLY INTO CONCRETE OR MASONRY
WITH 1–1/4" MIN. EMBED INTO CONC. OR MASONRY

ANCHOR EDGE DISTANCES
INTO CONCRETE AND MASONRY = 2–1/2" MIN.
INTO WOOD STRUCTURE = 1" MIN.

TYPE 'C'– 5/16" DIA ULTRACON BY 'ELCO' (Fu=177 KSI, Fy=155 KSI)
INTO WOOD STRUCTURES
WITH 1–7/8" MIN. PENETRATION INTO WOOD

THRU 1BY OR 2BY WOOD BUCKS INTO CONCRETE
WITH 1–1/4" MIN. EMBED INTO CONCRETE

TYPE 'D'– 5/16" DIA ULTRACON BY 'ELCO' (Fu=177 KSI, Fy=155 KSI)
DIRECTLY INTO CONCRETE OR MASONRY
WITH 1–1/4" MIN. EMBED INTO CONC. OR MASONRY

ANCHOR EDGE DISTANCES
INTO CONCRETE AND MASONRY = 3" MIN.
INTO WOOD STRUCTURE = 1–1/4" MIN.

TYPE 'E'– #14 SELF DRILLING SCREWS ST/ST (GRADE 5 CRS)
INTO METAL STRUCTURES
STEEL : 12 GA. MIN. (Fy = 36 KSI MIN.)
ALUMINUM : 1/8" THK. MIN. (6063–T5 MIN.)
(STEEL IN CONTACT WITH ALUMINUM TO BE PLATED OR PAINTED)

ANCHOR EDGE DISTANCES
INTO METAL STRUCTURE = 1/2" MIN.

CONCRETE AT HEAD, SILL OR JAMBS f'c = 3000 PSI MIN.
C–90 HOLLOW/FILLED BLOCK AT JAMBS f'm = 2000 PSI MIN.

ANCHORS

Engr: JAVAD AHMAD
CIVIL
FLA. PE # 70592
C.A.N. 3838

AUG 23 2012

Approved as complying with the Florida Building Code
Date Sept. 6, 2012
NOA# 12-0702.01
Miami Dade Product Control
By Manuel Perez

AL-FAROOQ CORPORATION
ENGINEERS & PRODUCT DEVELOPMENT
1235 S.W. 87 AVE
MIAMI, FLORIDA 33174
TEL. (305) 264-8100 FAX. (305) 262-6978

COMP–ANL\W12–29ENV

SERIES ENV–450 ALUM WINDOWALL SYS. (L.M.I.)

ENVIRALUM INDUSTRIES INC.
5110 N.W. 72 AVENUE BLDG. C
MIAMI, FL. 33166
TEL. (786) 251–0204 FAX. (305) 385–7749

revisions:			
no	date	by	description
A	08.22.12		NO CHANGE THIS SHEET

date: 06–04–12
scale: –
dr. by: HAMID
chk. by:

drawing no. W12–29

DOOR MULLION LOAD CAPACITY			
NOMINAL DIMS.		WITH REINF.	
WIDTH (W)	FRAME HEIGHT	EXT.(+)	INT.(-)
40-3/4"	102"	75.0	75.0
43-3/4"		75.0	75.0
46-3/4"		75.0	75.0
49-3/4"		75.0	75.0
52-3/4"		75.0	75.0
55-3/4"		75.0	75.0
40-3/4"	108"	75.0	75.0
43-3/4"		75.0	75.0
46-3/4"		75.0	75.0
49-3/4"		75.0	75.0
52-3/4"		75.0	75.0
52-3/4"		75.0	75.0
40-3/4"	114"	75.0	75.0
43-3/4"		75.0	75.0
46-3/4"		75.0	75.0
49-3/4"		75.0	75.0
40-3/4"	120"	75.0	75.0
43-3/4"		75.0	75.0
46-3/4"		72.2	72.2
49-3/4"		67.9	67.9

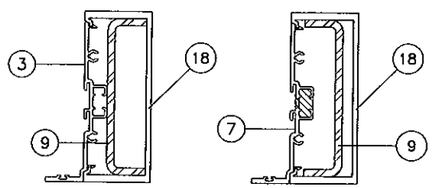

DOOR MULLION
WITH REINF.

	Ix IN^4	Sx IN^3
ALUMINUM	5.0950	2.0993
STEEL	2.2740	1.1025
TOTAL Ix ALUM + Ix STL X 2.9	11.6896	

ANCHOR TYPES	TOTAL NO. OF ANCHORS AT DOOR MULLION HEAD
A	10
B	8
C	8
D	8
E	8

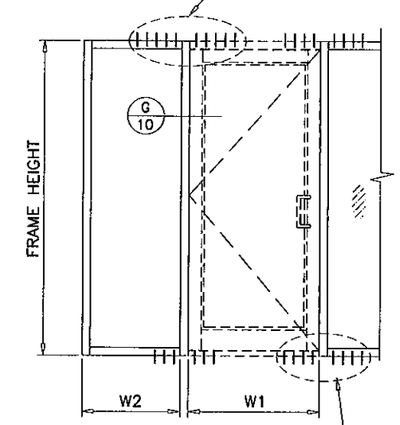

$$\text{WIDTH (W)} = \frac{W1 + W2}{2} + 1.750$$

ANCHOR TYPES	TOTAL NO. OF ANCHORS AT DOOR MULLION BOTTOM
B	8
D	6

ENVIRALUM
ENTRANCE DOORS
SEE SEPARATE NOA

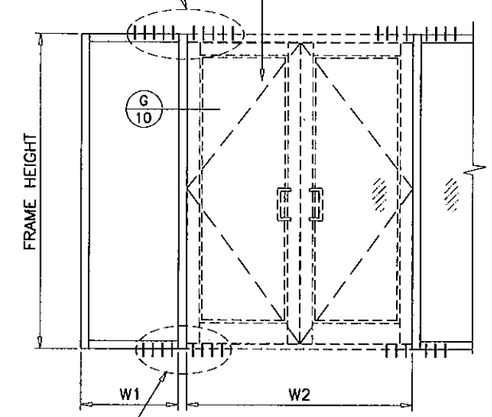

$$\text{WIDTH (W)} = \frac{W1}{2} + \frac{W2}{4} + 1.750$$

ANCHOR TYPES	TOTAL NO. OF ANCHORS AT DOOR MULLION HEAD
A	10
B	8
C	8
D	8
E	8

ENVIRALUM
ENTRANCE DOORS
SEE SEPARATE NOA

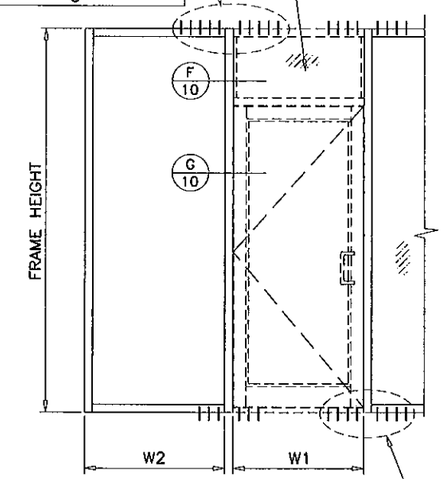

$$\text{WIDTH (W)} = \frac{W1 + W2}{2} + 1.750$$

ANCHOR TYPES	TOTAL NO. OF ANCHORS AT DOOR MULLION BOTTOM
B	8
D	6

DOOR MULLION

Engr: JAVAD AHMAD
CIVIL
FLA. PE # 70592
C.A.N. 3538
AUG 2 8 2012

Approved as complying with the Florida Building Code
Date Sept. 6, 2012
NOA# 12-0702.01
Miami Dade Product Control
By. Manuel Perez

AL-FAROOQ CORPORATION
ENGINEERS & PRODUCT DEVELOPMENT
1235 S.W. 87 AVE
MIAMI, FLORIDA 33174
TEL. (305) 264-8100 FAX. (305) 262-6978

COMP-ANL\W12-29ENV

SERIES ENV-450 ALUM WINDOWALL SYS. (L.M.I.)

ENVIRALUM INDUSTRIES INC.
5110 N.W. 72 AVENUE BLDG. C
MIAMI, FL. 33166
TEL. (786) 251-0204 FAX. (305) 385-7749

revisions:

no	date	by	description
A	08.22.12		REV. PER RER COMMENTS

date: 06-04-12
scale: -
dr. by: HAMID
chk. by:

drawing no.
W12-29

DOOR MULLION LOAD CAPACITY - PSF				
NOMINAL DIMS.				WITH REINF.
FRAME HEIGHT INCHES	DOOR HEIGHT INCHES	WIDTH (W1) INCHES	WIDTH (W2) INCHES	EXT. (+) INT. (-)
102	80	60	30	75.0
			36	75.0
			42	75.0
			48	75.0
		72	30	75.0
			36	75.0
			42	75.0
			48	75.0
		84	30	75.0
			36	75.0
			42	75.0
			48	75.0
		96	30	75.0
			36	75.0
			42	75.0
			48	75.0
108	80	60	30	75.0
			36	75.0
			42	75.0
			48	75.0
		72	30	75.0
			36	75.0
			42	75.0
			48	72.6
		84	30	75.0
			36	75.0
			42	75.0
			48	72.6
		96	30	75.0
			36	74.2
			42	70.5
			48	67.2
114	80	60	30	75.0
			36	75.0
			42	75.0
			48	75.0
		72	30	75.0
			36	75.0
			42	72.9
			48	69.0
		84	30	74.2
			36	70.1
			42	66.5
			48	63.2
		96	30	67.5
			36	64.1
			42	61.1
			48	58.3
120	80	60	30	75.0
			36	75.0
			42	71.0
			48	66.9
		72	30	72.0
			36	67.8
			42	64.0
			48	60.6
		84	30	64.7
			36	61.3
			42	58.2
			48	55.4
		96	30	58.8
			36	56.0
			42	53.4
			48	51.1

DOOR MULLION LOAD CAPACITY - PSF				
NOMINAL DIMS.				WITH REINF.
FRAME HEIGHT INCHES	DOOR HEIGHT INCHES	WIDTH (W1) INCHES	WIDTH (W2) INCHES	EXT. (+) INT. (-)
102	84	60	30	75.0
			36	75.0
			42	75.0
			48	75.0
		72	30	75.0
			36	75.0
			42	75.0
			48	75.0
		84	30	75.0
			36	75.0
			42	75.0
			48	75.0
		96	30	75.0
			36	75.0
			42	75.0
			48	75.0
108	84	60	30	75.0
			36	75.0
			42	75.0
			48	75.0
		72	30	75.0
			36	75.0
			42	75.0
			48	75.0
		84	30	75.0
			36	75.0
			42	75.0
			48	74.9
		96	30	75.0
			36	74.2
			42	73.0
			48	69.4
114	84	60	30	75.0
			36	75.0
			42	75.0
			48	75.0
		72	30	75.0
			36	75.0
			42	75.0
			48	70.8
		84	30	75.0
			36	72.4
			42	68.5
			48	65.0
		96	30	70.0
			36	66.3
			42	63.1
			48	60.1
120	84	60	30	75.0
			36	75.0
			42	72.8
			48	68.4
		72	30	74.2
			36	69.7
			42	65.7
			48	62.2
		84	30	66.8
			36	63.2
			42	59.9
			48	56.9
		96	30	60.8
			36	57.8
			42	55.0
			48	52.5

DOOR MULLION LOAD CAPACITY - PSF				
NOMINAL DIMS.				WITH REINF.
FRAME HEIGHT INCHES	DOOR HEIGHT INCHES	WIDTH (W1) INCHES	WIDTH (W2) INCHES	EXT. (+) INT. (-)
102	90	60	30	75.0
			36	75.0
			42	75.0
			48	75.0
		72	30	75.0
			36	75.0
			42	75.0
			48	75.0
		84	30	75.0
			36	75.0
			42	75.0
			48	75.0
		96	30	75.0
			36	75.0
			42	75.0
			48	75.0
108	90	60	30	75.0
			36	75.0
			42	75.0
			48	75.0
		72	30	75.0
			36	75.0
			42	75.0
			48	75.0
		84	30	75.0
			36	75.0
			42	75.0
			48	75.0
		96	30	75.0
			36	75.0
			42	75.0
			48	72.9
114	90	60	30	75.0
			36	75.0
			42	75.0
			48	75.0
		72	30	75.0
			36	75.0
			42	75.0
			48	73.7
		84	30	75.0
			36	75.0
			42	71.8
			48	67.9
		96	30	74.0
			36	69.9
			42	66.2
			48	62.9
120	90	60	30	75.0
			36	75.0
			42	75.0
			48	70.8
		72	30	75.0
			36	72.8
			42	68.4
			48	64.5
		84	30	70.2
			36	66.2
			42	62.5
			48	59.3
		96	30	64.0
			36	60.6
			42	57.6
			48	54.8

DOOR MULLION LOAD CAPACITY - PSF				
NOMINAL DIMS.				WITH REINF.
FRAME HEIGHT INCHES	DOOR HEIGHT INCHES	WIDTH (W1) INCHES	WIDTH (W2) INCHES	EXT. (+) INT. (-)
102	96	60	30	75.0
			36	75.0
			42	75.0
			48	75.0
		72	30	75.0
			36	75.0
			42	75.0
			48	75.0
		84	30	75.0
			36	75.0
			42	75.0
			48	75.0
		96	30	75.0
			36	75.0
			42	75.0
			48	74.4
108	96	60	30	75.0
			36	75.0
			42	75.0
			48	75.0
		72	30	75.0
			36	75.0
			42	75.0
			48	75.0
		84	30	75.0
			36	75.0
			42	75.0
			48	75.0
		96	30	75.0
			36	75.0
			42	74.7
			48	71.5
114	96	60	30	75.0
			36	75.0
			42	75.0
			48	75.0
		72	30	75.0
			36	75.0
			42	75.0
			48	73.7
		84	30	75.0
			36	75.0
			42	75.0
			48	71.0
		96	30	75.0
			36	73.7
			42	69.6
			48	66.0
120	96	60	30	75.0
			36	75.0
			42	75.0
			48	73.3
		72	30	75.0
			36	75.0
			42	71.3
			48	67.1
		84	30	73.9
			36	69.3
			42	65.4
			48	61.8
		96	30	67.5
			36	63.7
			42	60.4
			48	57.3

DOOR MULLION

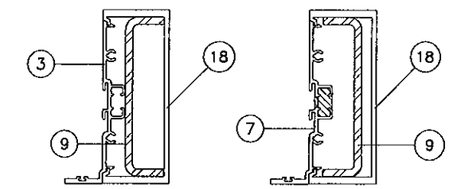

DOOR MULLION
WITH REINF.

	Ix IN^4	Sx IN^3
ALUMINUM	5.0950	2.0993
STEEL	2.2740	1.1025
TOTAL Ix ALUM + Ix STL X 2.9	11.6896	

ANCHOR TYPES	TOTAL NO. OF ANCHORS AT DOOR MULLION HEAD
A	10
B	8
C	8
D	8
E	8

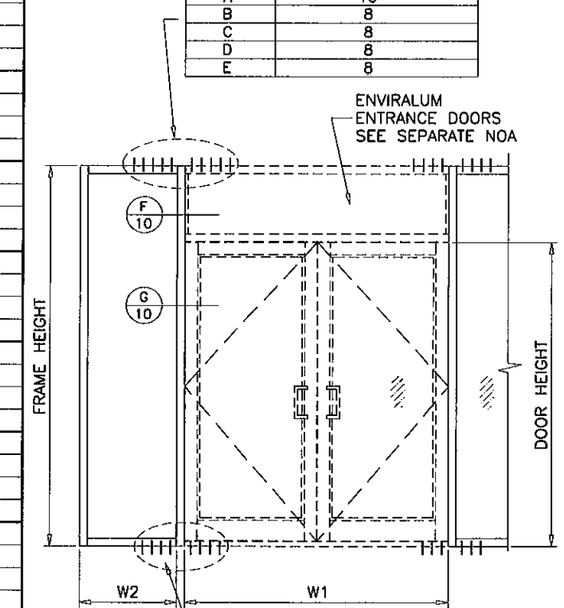

ANCHOR TYPES	TOTAL NO. OF ANCHORS AT DOOR MULLION BOTTOM
B	8
D	6

Engr: JAVAD AHMAD
CIVIL
FLA. PE # 70592
C.A.N. 3533

AUG 23 2012

Approved as complying with the Florida Building Code
Date Sept. 6, 2012
NOA# 12-0702.01
Miami Dade Product Control
By Manuel Perez

AL-FAROOQ CORPORATION
ENGINEERS & PRODUCT DEVELOPMENT
1235 S.W. 87 AVE
MIAMI, FLORIDA 33174
TEL. (305) 264-8100 FAX. (305) 262-6978

COMP-ANL\W12-29ENV

SERIES ENV-450 ALUM WINDOWALL SYS. (L.M.I.)

ENVIRALUM INDUSTRIES INC.
5110 N.W. 72 AVENUE BLDG. C
MIAMI, FL. 33166
TEL. (786) 251-0204 FAX. (305) 385-7749

revisions:

no	date	by	description
A	08.22.12		REV. PER RER COMMENTS

date: 06-04-12
scale: -
dr. by: HAMID
chk. by:

drawing no.
W12-29

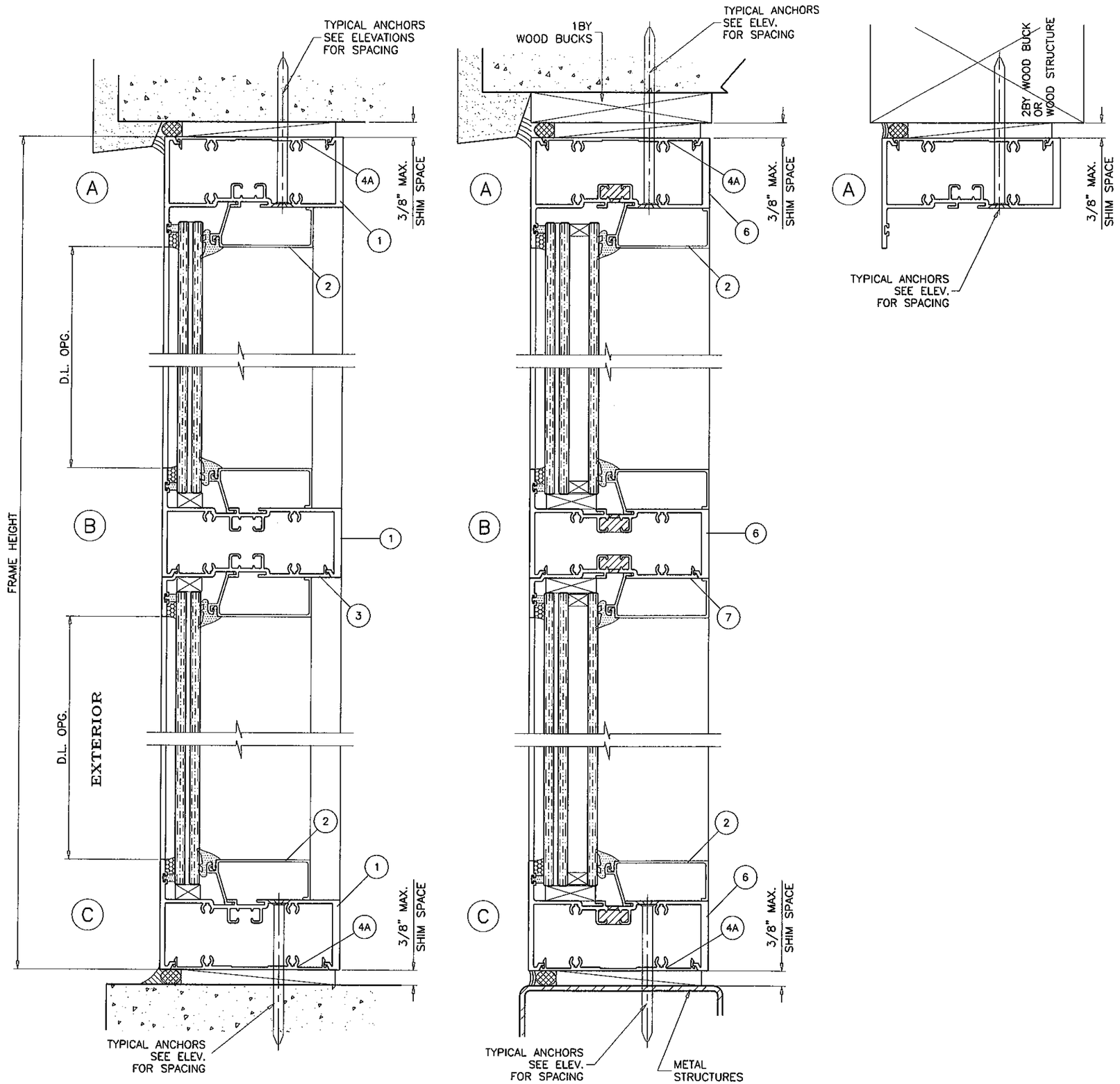

Engr: JAVAD AHMAD
CIVIL
FLA. PE # 70592
O.A.N. 3538
AUG 23 2012

Approved as complying with the Florida Buiding Code
Date Sept. 6, 2012
NOA# 12-0702.01
Miami Dade Product Control
By Manuel Pro

AL-FAROOQ CORPORATION
ENGINEERS & PRODUCT DEVELOPMENT
1235 S.W. 87 AVE
MIAMI, FLORIDA 33174
TEL. (305) 264-8100 FAX. (305) 262-6978

COMP-ANL\W12-29ENV

SERIES ENV-450 ALUM WINDOWALL SYS. (L.M.I.)

ENVIRALUM INDUSTRIES INC.
5110 N.W. 72 AVENUE BLDG. C
MIAMI, FL. 33166
TEL. (786) 251-0204 FAX. (305) 385-7749

revisions:

no	date	by	description
A	08.22.12		REV. PER RER COMMENTS

date: 06-04-12
scale: 3/8" = 1"
dr. by: HAMID
chk. by:

drawing no.
W12-29

sheet 8 of 12

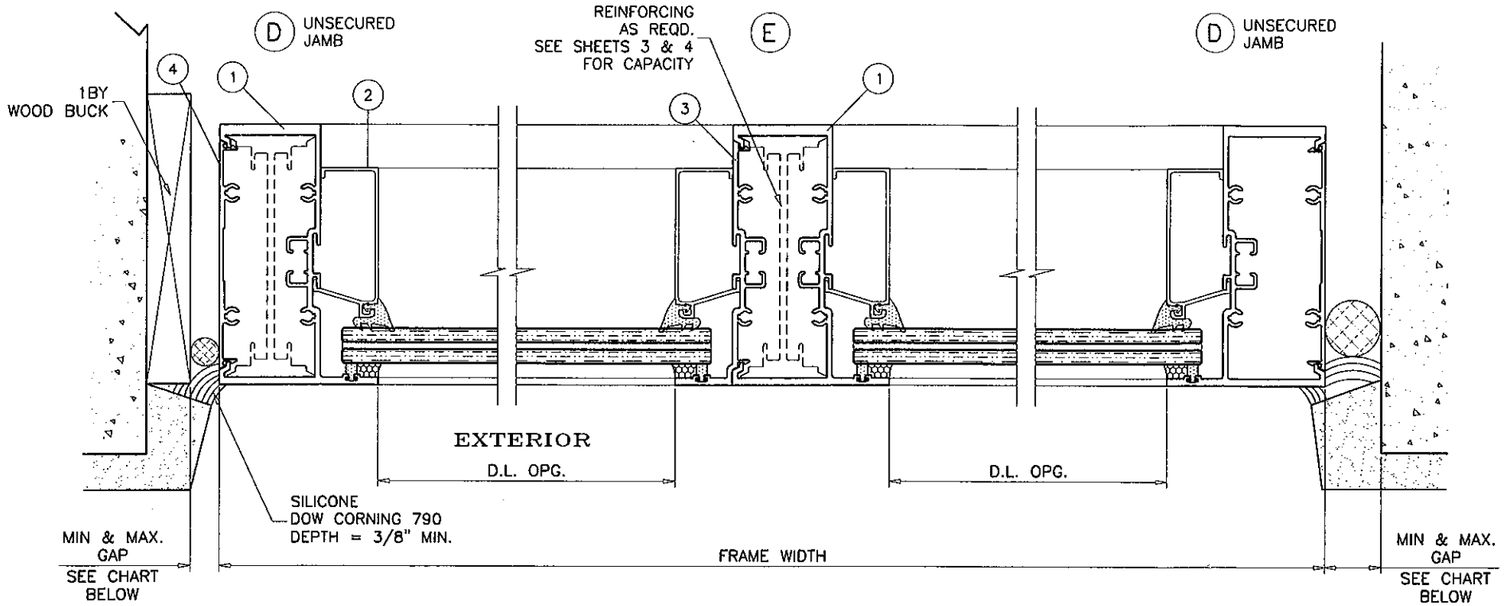

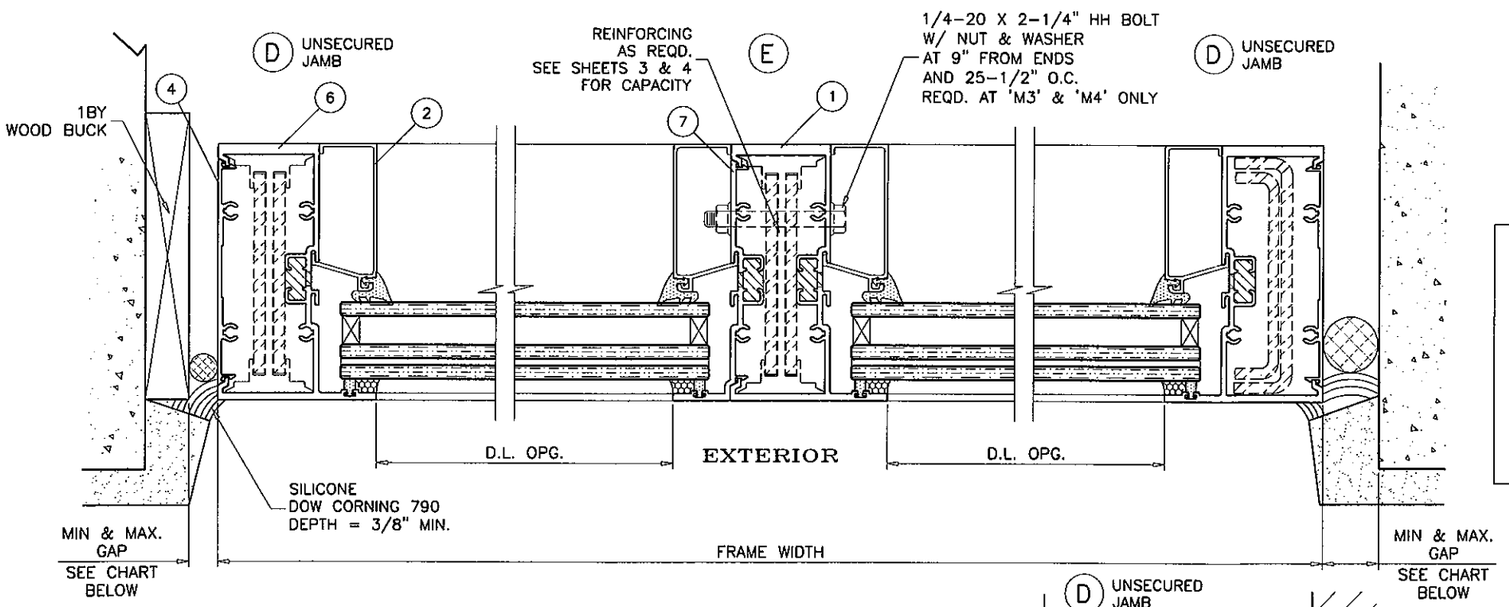

MAX. FRAME HEIGHT	GAP	
	MIN.	MAX.
84"	1/4"	1"
96"	5/16"	1"
120"	3/8"	1"
144"	1/2"	1"

ALTERNATE SEALANTS AT JAMB GAPS CAN BE DESIGNED BY ENGINEER OF RECORD BASED ON MANUFACTURER GUIDE LINES.

UNSECURED JAMBS
FREE STANDING

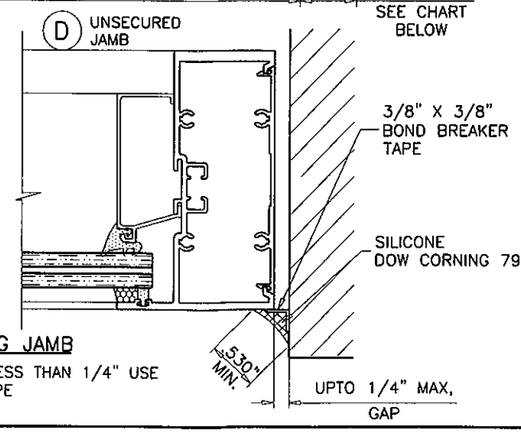

FREE STANDING JAMB

FOR JOINTS GAP LESS THAN 1/4" USE BOND BREAKER TAPE SEE DETAIL ABOVE

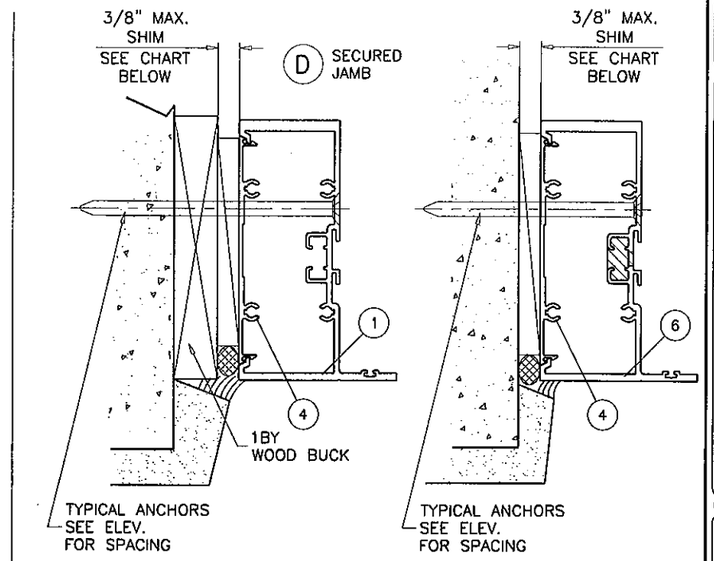

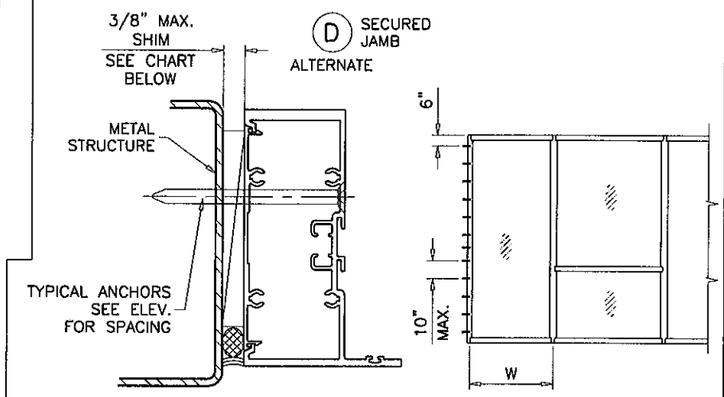

JAMB ANCHORS DESIGN LOAD CAPACITY – PSF								
	3/8" MAX. SHIM SPACE				1/4" MAX. SHIM SPACE			
	TYPE 'A'&'B'	TYPE 'C'	TYPE 'D'	TYPE 'E'	TYPE 'A'	TYPE 'B'	TYPE 'C'	TYPE 'D'&'E'
WIDTH (W)	EXT.(+) INT.(–)	EXT.(+) INT.(–)	EXT.(+) INT.(–)	EXT.(+) INT.(–)	EXT.(+) INT.(–)	EXT.(+) INT.(–)	EXT.(+) INT.(–)	EXT.(+) INT.(–)
42"	131.0	131.0	131.0	131.0	131.0	131.0	131.0	131.0
48"	129.0	131.0	131.0	131.0	131.0	131.0	131.0	131.0
54"	114.0	131.0	131.0	131.0	131.0	131.0	131.0	131.0
60"	103.0	131.0	131.0	119.0	123.0	131.0	131.0	131.0
66"	94.0	126.0	131.0	109.0	112.0	131.0	126.0	131.0
72"	86.0	115.0	131.0	100.0	102.0	127.0	115.0	131.0

SECURED JAMBS
(REINFORCING NOT REQUIRED)

Engr: JAVAD AHMAD
CIVIL
FLA. PE # 70592
C.A.N. 3538

AUG 23 2012

Approved as complying with the Florida Building Code
Date Sept. 6, 2012
NOA# 12-0702.01
Miami Dade Product Control
By Manuel Perez

AL-FAROOQ CORPORATION
ENGINEERS & PROJECT DEVELOPMENT
1235 S.W. 87 AVE
MIAMI, FLORIDA 33174
TEL. (305) 264-8100 FAX. (305) 262-6978
COMP-ANL\W12-29ENV

SERIES ENV-450 ALUM WINDOWALL SYS. (L.M.I.)

ENVIRALUM INDUSTRIES INC.
5110 N.W. 72 AVENUE BLDG. C
MIAMI, FL. 33166
TEL. (786) 251-0204 FAX. (305) 385-7749

revisions:			
no	date	by	description
A	08.22.12		REV. PER RER COMMENTS

date: 06-04-12
scale: 3/8" = 1"
dr. by: HAMID
chk. by:

drawing no. W12-29

SEE SEPARATE NOA FOR DESIGN LOAD CAPACITY OF DOORS AND DOOR ANCHORS.

LOWER VALUES FROM DOORS NOA OR STOREFRONT SYSTEM CAPACITY CHARTS WILL APPLY TO ENTIRE SYSTEM.

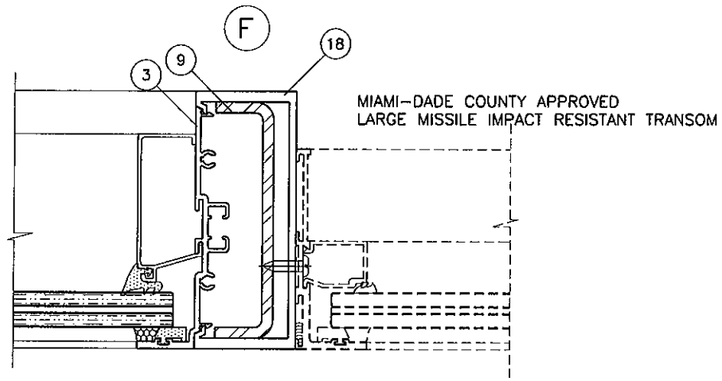

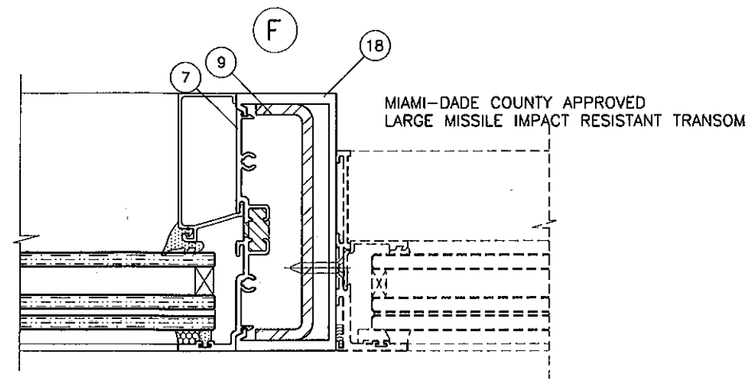

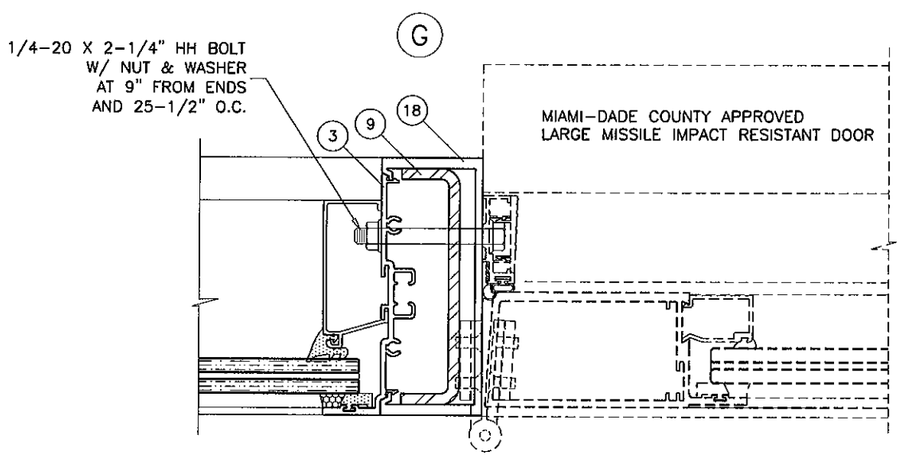

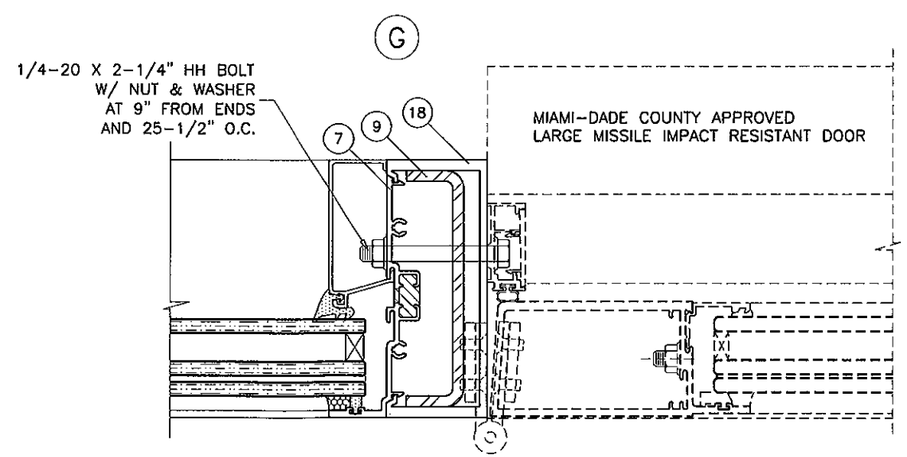

Engr: JAVAD AHMAD
CIVIL
FLA. PE # 70592
C.A.N. 3538
AUG 23 2012

Approved as complying with the Florida Building Code
Date Sept. 6, 2012
NOA# 12-0702.01
Miami Dade Product Control
By Manuel Perez

AL-FAROOQ CORPORATION
ENGINEERS & PRODUCT DEVELOPMENT
1235 S.W. 87 AVE
MIAMI, FLORIDA 33174
TEL. (305) 264-8100 FAX. (305) 262-6978

COMP-ANL\W12-29ENV

SERIES ENV-450 ALUM WINDOWALL SYS. (L.M.I.)

ENVIRALUM INDUSTRIES INC.
5110 N.W. 72 AVENUE BLDG. C
MIAMI, FL. 33166
TEL. (786) 251-0204 FAX. (305) 385-7749

revisions:

no	date	by	description
A	08.22.12		NO CHANGE THIS SHEET

date: 06-04-12
scale: 3/8" = 1"
dr. by: HAMID
chk. by:

drawing no.
W12-29

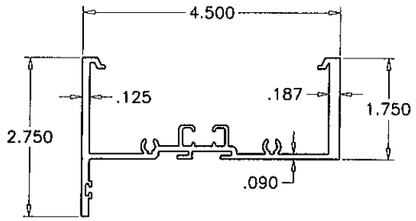

1 HEAD/SILL/JAMB/INTERMEDIATE

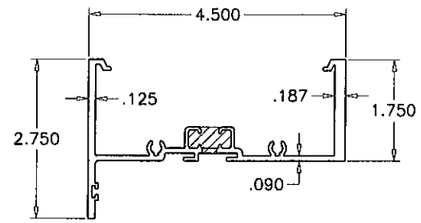

6 HEAD/SILL/JAMB/INTERMEDIATE

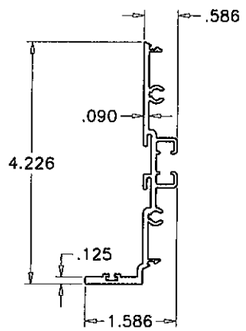

3 FIN SNAP

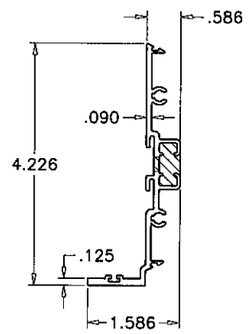

7 FIN SNAP

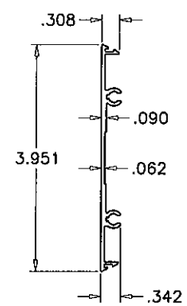

4 FLAT SNAP

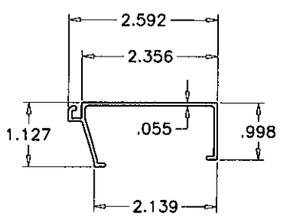

2 GLASS STOP

ITEM NO.	PART NUMBER	QUANTITY	DESCRIPTION	MATERIAL	MANF./SUPPLIER/REMARKS
1	ENV-451	AS REQD.	HEAD/SILL/JAMB & INTERMEDIATE	6063-T6	ENVIRALUM
2	ENV-452	AS REQD.	GLASS STOP	6063-T6	ENVIRALUM
3	ENV-453	AS REQD.	FIN SNAP	6063-T6	ENVIRALUM
4	ENV-454	1/ FREE STANDING JAMB	FLAT SNAP FULL LENGTH OF VERTICAL	6063-T6	ENVIRALUM
4A	ENV-454-3	1/ INSTALL SCREW	FLAT SNAP, 3" LONG	6063-T6	ENVIRALUM
4B	ENV-454-7	1/ CORNER	FLAT SNAP, 7" LONG	6063-T6	ENVIRALUM
5	ENV-455	AS REQD.	ALUMINUM REINFORCEMENT	6063-T6	ENVIRALUM
6	ENV-451T	AS REQD.	HEAD/SILL/JAMB & INTERMEDIATE (THERMAL)	6063-T6	ENVIRALUM
7	ENV-453T	AS REQD.	FIN SNAP (THERMAL)	6063-T6	ENVIRALUM
8	ENV-ST1	AS REQD.	3/16" X 3-1/2' BAR	STEEL	ENVIRALUM
9	ENV-ST2	AS REQD.	1" X 4-1/8" X 1" X 3/16" THK. CHANNEL	STEEL	ENVIRALUM
10	ENV-ST3	AS REQD.	3/4" X 3-5/8" X 3/4" X 3/16" THK. CHANNEL	STEEL	ENVIRALUM
11	ENV-G01	AS REQD.	INTERIOR GASKET	EPDM	GLAZING RUBBER PRODUCTS
12	ENV-G03	AS REQD.	SPACER GASKET	EPDM	GLAZING RUBBER PRODUCTS
13	ENV-SB01	1/ QUARTER POINT	3/8" X 1/2" X 2" SETTING BLOCKS, DUROMETER 70±5	EPDM	FRANK LOWE RUBBER
14	ENV-SB02	1/ QUARTER POINT	3/8" X 1-1/4" X 2" SETTING BLOCKS, DUROMETER 70±5	EPDM	FRANK LOWE RUBBER
15	DOW 791	AS REQD.	GLAZING COMPOUND	SILICONE	DOW CORNING
16	GE SCS2000	AS REQD.	GLAZING COMPOUND	SILICONE	GE MOMENTIVE
17	#12 X 1-1/2	4/ CORNER	FRAME ASSEMBLY SCREWS	ST. STEEL	HWH SMS
18	ENV-355	AS REQD.	DOOR MULLION	6063-T6	-

SEALANTS:

ALL FRAME CORNERS, JOINTS, MULLION SEAMS AND PERIMETER OF GLAZING BEAD TO FRAME SEALED WITH SILICONE SEALANT.

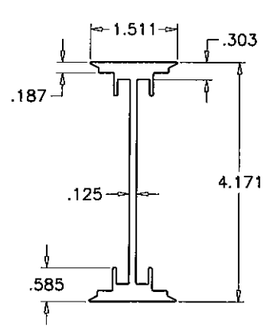

5 ALUM REINF.

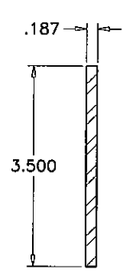

8 STEEL BAR REINF.

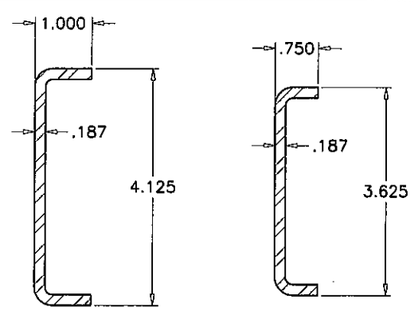

9 STEEL CHANNEL REINF. 10

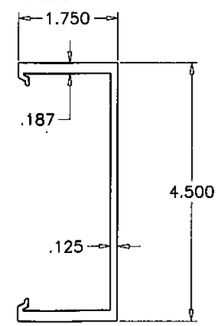

18 DOOR MULLION

Engr: JAVAD AHMAD
CIVIL
FLA. PE # 70592
C.A.N. 3538
AUG 23 2012

Approved as complying with the Florida Building Code
Date Sept. 6, 2012
NOA# 12-0702.01
Miami Dade Product Control
By Manuel Perez

AL-FAROOQ CORPORATION
ENGINEERS & PRODUCT DEVELOPMENT
1235 S.W. 87 AVE
MIAMI, FLORIDA 33174
TEL. (305) 264-8100 FAX. (305) 262-6978

COMP-ANL\W12-29ENV

SERIES ENV-450 ALUM WINDOWALL SYS. (L.M.I.)

ENVIRALUM INDUSTRIES INC.
5110 N.W. 72 AVENUE BLDG. C
MIAMI, FL. 33166
TEL. (786) 251-0204 FAX. (305) 385-7749

revisions:

no	date	by	description
A	08.22.12		NO CHANGE THIS SHEET

date: 06-04-12
scale: 3/8" = 1"
dr. by: HAMID
chk. by:

drawing no.
W12-29

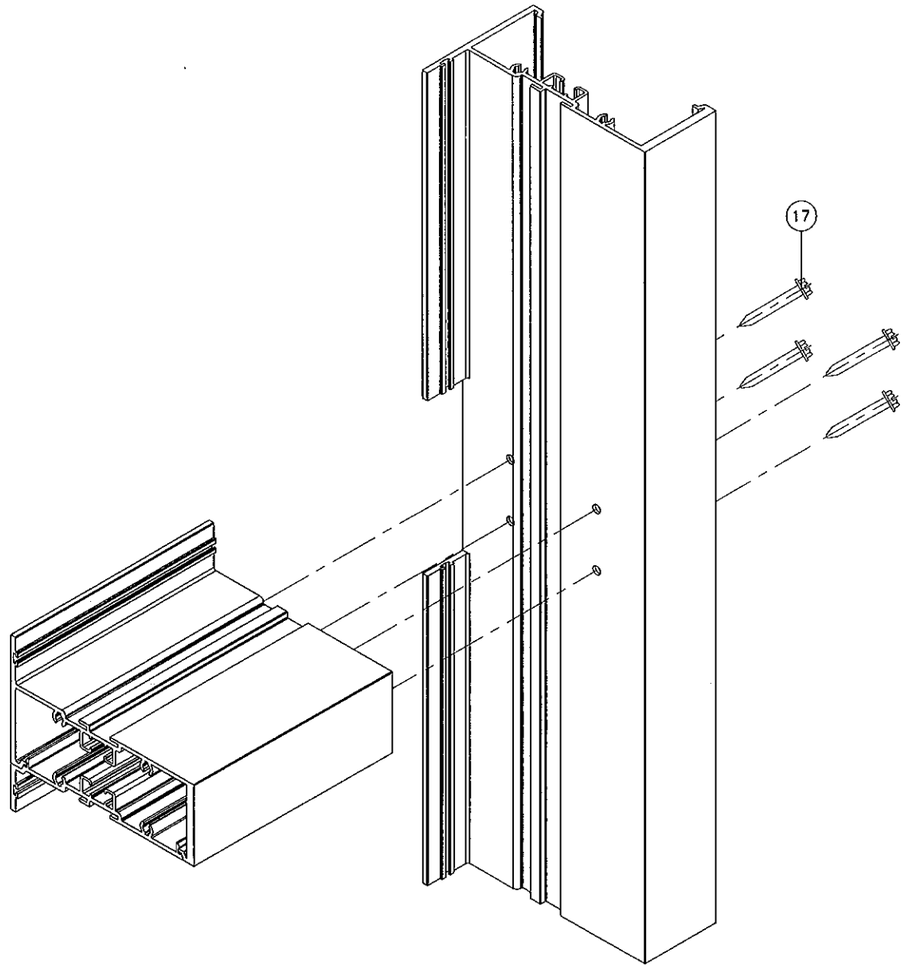

INTERMEDIATE CORNERS

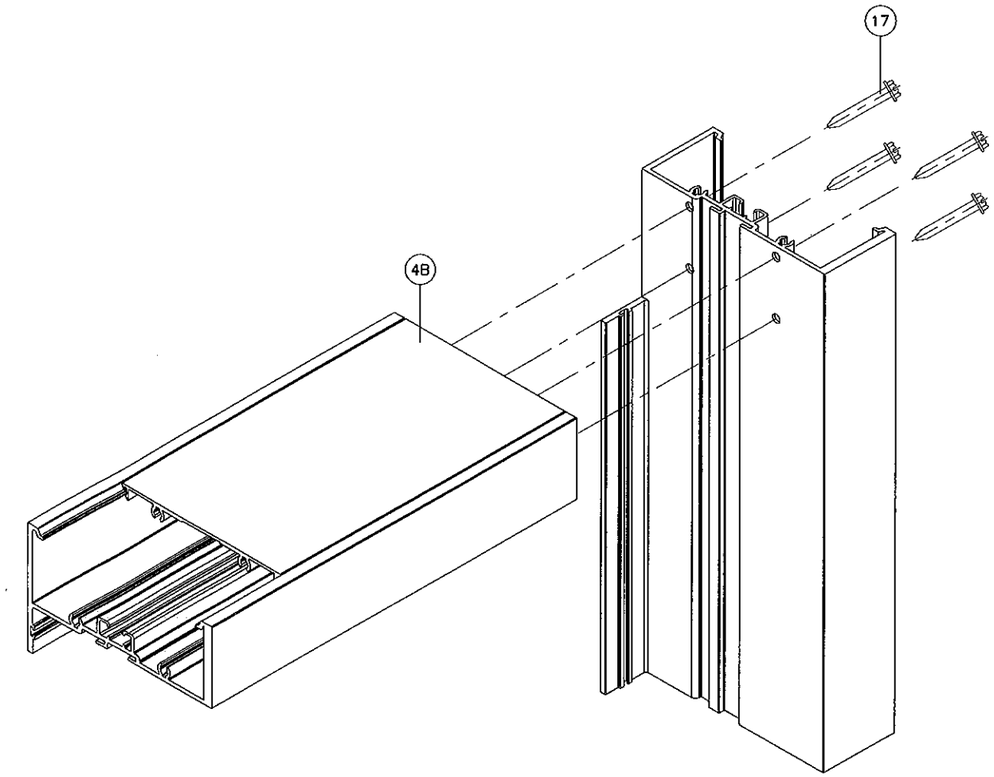

TOP/BOTTOM CORNERS

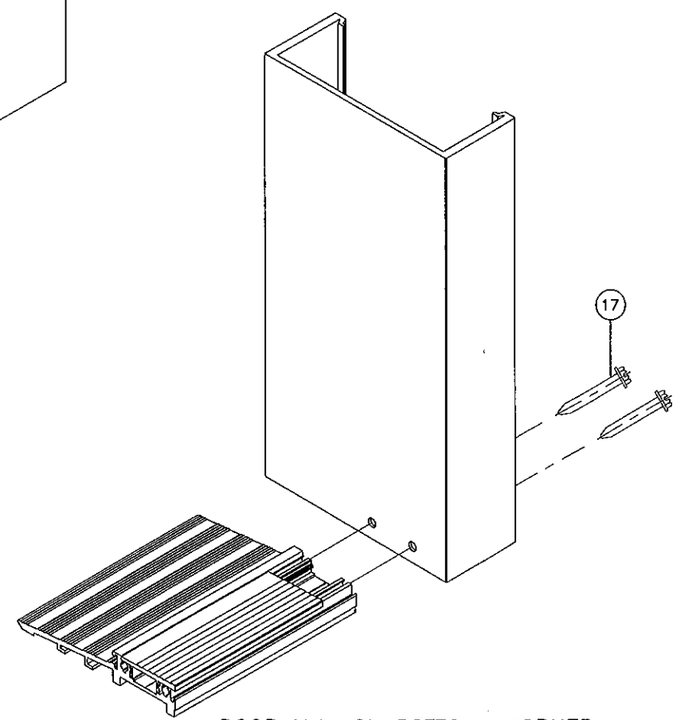

DOOR MULLION BOTTOM CORNER

Engr: JAVAD AHMAD
CIVIL
FLA. PE # 70592
C.A.N. 3538

AUG 23 2012

Approved as complying with the
Florida Building Code
Date Sept 6, 2012
NOA# 12-0702.01
Miami Dade Product Control
By Manuel Perez

AL-FAROOQ CORPORATION
ENGINEERS & PRODUCT DEVELOPMENT
1235 S.W. 87 AVE
MIAMI, FLORIDA 33174
TEL. (305) 264-8100 FAX. (305) 262-6978

COMP-ANL\W12-29ENV

SERIES ENV-450 ALUM WINDOWALL SYS. (L.M.I.)

ENVIRALUM INDUSTRIES INC.
5110 N.W. 72 AVENUE BLDG. C
MIAMI, FL. 33166
TEL. (786) 251-0204 FAX. (305) 385-7749

revisions:

no	date	by	description
A	08.22.12		NO CHANGE THIS SHEET

date: 06-04-12
scale: 3/8" = 1"
dr. by: HAMID
chk. by:

drawing no.
W12-29

sheet 12 of 12