MIAMI-DADE COUNTY
PRODUCT CONTROL SECTION
11805 SW 26 Street, Room 208
Miami, Florida 33175-2474
T (786) 315-2590 F (786) 315-2599
www.miamidade.gov/economy

DEPARTMENT OF REGULATORY AND ECONOMIC RESOURCES (RER)
BOARD AND CODE ADMINISTRATION DIVISION

NOTICE OF ACCEPTANCE (NOA)

CGI Windows & Doors, Inc.
10100 N. W. 25th Street
Miami, Fl. 33172

SCOPE:

This NOA is being issued under the applicable rules and regulations governing the use of construction materials. The documentation submitted has been reviewed and accepted by Miami-Dade County RER -Product Control Section to be used in Miami Dade County and other areas where allowed by the Authority Having Jurisdiction (AHJ).

This NOA shall not be valid after the expiration date stated below. The Miami-Dade County Product Control Section (In Miami Dade County) and/or the AHJ (in areas other than Miami Dade County) reserve the right to have this product or material tested for quality assurance purposes. If this product or material fails to perform in the accepted manner, the manufacturer will incur the expense of such testing and the AHJ may immediately revoke, modify, or suspend the use of such product or material within their jurisdiction. RER reserves the right to revoke this acceptance, if it is determined by Miami-Dade County Product Control Section that this product or material fails to meet the requirements of the applicable building code.

This product is approved as described herein, and has been designed to comply with the Florida Building Code, including the High Velocity Hurricane Zone.

DESCRIPTION: Series "450" Outswing Opaque(Alumclad Composite Panels) Doors w/wo Sidelites - Impact

APPROVAL DOCUMENT: Drawing No.**W12-22**, titled "Series 450 Outswing Doors & Sidelites", sheets 1, 1.1, 1.2 2, 2.1, 2.2, 3, 4, 5, 6, 7 and 7.1 of 7, prepared by manufacturer, dated JUN 29, 2012, signed and sealed by Javad Ahmad P.E., bearing the Miami-Dade County Product Control approval stamp with the Notice of Acceptance number and approval date by the Miami-Dade County Product Control Section.

MISSILE IMPACT RATING: Large and Small Missile Impact

Limitations:

1. See Design Pressure ratings in sheets 1.1, 5, 6 and 7 for unit sizes Vs lock options, mullion type, sidelites, glass types and anchors.
2. For mulled units lower design pressure of doors or mullion shall control for entire assembly.
3. Exterior Design Pressure= +100 PSF Max w/ threshold (sill type S-O). Sills (thresholds) types SS-1 & SS-2 are not rated for water infiltration. See thresholds (sills) limitations notes, in sheets 4 & 6.
4. Narrow stile sidelites are limited to 18" or less.

LABELING: Each unit shall bear a permanent label with the manufacturer's name or logo, city, state and series and following statement: "Miami-Dade County Product Control Approved", noted herein.

RENEWAL of this NOA shall be considered after a renewal application has been filed and there has been no change in the applicable building code negatively affecting the performance of this product.

TERMINATION of this NOA will occur after the expiration date or if there has been a revision or change in the materials, use, and/or manufacture of the product or process. Misuse of this NOA as an endorsement of any product, for sales, advertising or any other purposes shall automatically terminate this NOA. Failure to comply with any section of this NOA shall be cause for termination and removal of NOA.

ADVERTISEMENT: The NOA number preceded by the words Miami-Dade County, Florida, and followed by the expiration date may be displayed in advertising literature. If any portion of the NOA is displayed, then it shall be done in its entirety.

INSPECTION: A copy of this entire NOA shall be provided to the user by the manufacturer or its distributors and shall be available for inspection at the job site at the request of the Building Official.

This NOA consists of this page 1 and evidence pages E-1& E-2, as well as approval document mentioned above.

The submitted documentation was reviewed by **Ishaq I. Chanda, P.E.**

MIAMI-DADE COUNTY APPROVED

10/23/12

NOTICE OF ACCEPTANCE: EVIDENCE SUBMITTED

A. DRAWINGS

1. Manufacturer's die drawings and sections.
2. Drawing No.**W12-22**, titled "Series 450 Outswing Doors & Sidelites", sheets 1, 1.1, 1.2, 2, 2.1, 2.2, 3, 4, 5, 6, 7 and 7.1 of 7, prepared by manufacturer, dated JUN 29, 2012, signed and sealed by Javad Ahmad, P.E.

B. TESTS

1. Test reports on: 1) Air Infiltration Test, per FBC, TAS 202-94
   2) Uniform Static Air Pressure Test, Loading per FBC TAS 202-94
   3) Water Resistance Test, per FBC, TAS 202-94(+50.0 PSF, sill S-I only)
   4) Large Missile Impact Test per FBC, TAS 201-94
   5) Cyclic Wind Pressure Loading per FBC, TAS 203-94
   6) Forced Entry Test, per FBC 2411 3.2.1, TAS 202-94

Along with manufacturer's parts and section drawing marked-up drawings of aluminum In swing / Outswing door w/wo sidelites, by Hurricane Testing Laboratory, Inc., Test Report No. **HTL-0080-0304-11** dated 11/28/2011 and **HTL-0080-0902-11**, signed and sealed by Vinu J. Abraham, P.E.

Note: This test report has been revised by addendum letters, issued by Architectural Testing (Former Hurricane Testing Lab), dated 01/20/12 and 04/03/12, both signed and sealed by Vinu J. Abraham, P.E.

Along with manufacturer's parts and section drawing marked-up drawings of double aluminum outswing doors, issued by Architectural Testing, Test Report No(s) **B-5234.02-450-18** dated 12/19/2011, signed and sealed by Vinu J. Abraham, P.E.

2. Test reports on: 1) Air Infiltration Test, per FBC, TAS 202-94
   2) Uniform Static Air Pressure Test, Loading per FBC TAS 202-94
   3) Water Resistance Test, per FBC, TAS 202-94
   4) Large Missile Impact Test per FBC, TAS 201-94
   5) Cyclic Wind Pressure Loading per FBC, TAS 203-94
   6) Forced Entry Test, per FBC 2411 3.2.1, TAS 202-94.

Along with manufacturer's parts and section drawing marked-up drawings of aluminum In/out swing door w/sidelites, by Hurricane Testing Laboratory, Inc., Test Report No. **HTL-97055 (0080-912-97)** dated 09/23/97 thru 02/27/98 for specimen #1, 2, 3, 4 tested per PA202-94, specimen #4, 5A, 5B, 5C tested per PA201-94 & PA203-94, signed and sealed by Timothy S. Marshall, P.E.

Along with manufacturer's parts and section drawing marked-up drawings of aluminum out swing door w/sidelites, by Hurricane Testing Laboratory, Inc., Test Report No. **HTL-01071 (0080-0402-02)** dated 04/01/2002 tested per PA201-94 & PA203-94, signed and sealed by Vinu J. Abraham, P.E. (submitted in file # **09-0723.04**). Original tests conducted per SFBC, PA 201, 202 &203-94 now known as FBC, TAS 201, 202 & 203-94.

Ishaq I. Chanda

Ishaq I. Chanda, P.E.
Product Control Examiner
NOA No 12-0706.02
Expiration Date: October 25, 2017
Approval Date: October 25, 2012

NOTICE OF ACCEPTANCE: EVIDENCE SUBMITTED

C. CALCULATIONS

1. Anchor verification calculations and structural analysis, complying with FBC-2010, prepared by Al Farooq Corporation, dated 09/09/11 and last revised on APR 24, 2012, signed and sealed by Javad Ahmad, P.E. (submitted under Outswing glazed doors NOA# 11-1025.02).

D. QUALITY ASSURANCE

1. Miami Dade Department of Permitting, Environment, and Regulatory Affairs (PERA).

E. MATERIAL CERTIFICATIONS

1. None

F. STATEMENTS

1. Statement letter of conformance to FBC 2010 and letter of no financial interest, prepared by Al Farooq Corporation, dated 10/16/12, signed and sealed by Javad Ahmad, P.E.
2. Lab compliance and addendum letters, as part of the above referenced test reports.

G. OTHER

1. Hardware cut sheets verified and marked-up by the Architectural Testing (former Hurricane Testing lab).
2. Reference outswing Glazed Doors w/wo sidelites NOA # 11-1025.02.
3. Test proposal # **10-0940**, dated 11/17/10 approved by BNC.

Ishaq I. Chanda

Ishaq I. Chanda, P.E.
Product Control Examiner
NOA No 12-0706.02
Expiration Date: October 25, 2017
Approval Date: October 25, 2012

TYPICAL ELEVATIONS

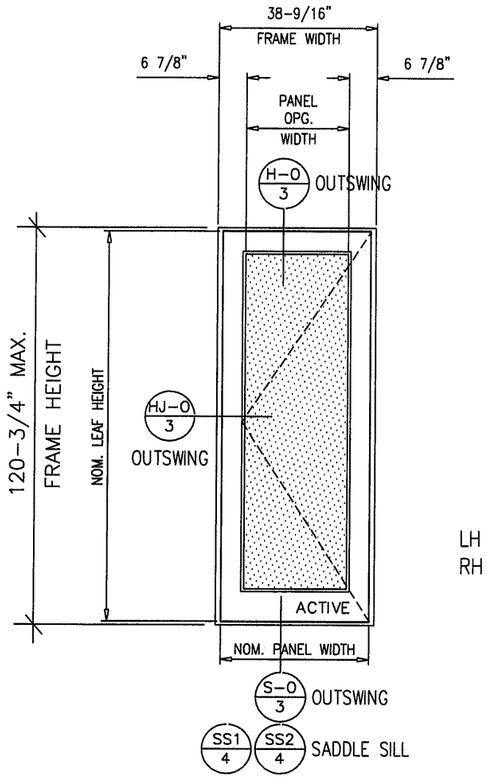

LH CONFIGURATIONS SHOWN
RH SIMILAR

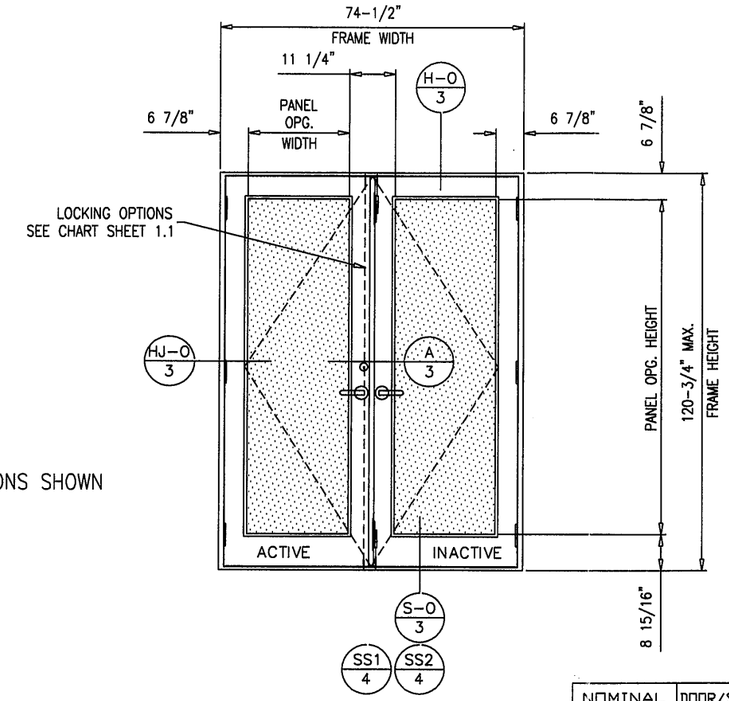

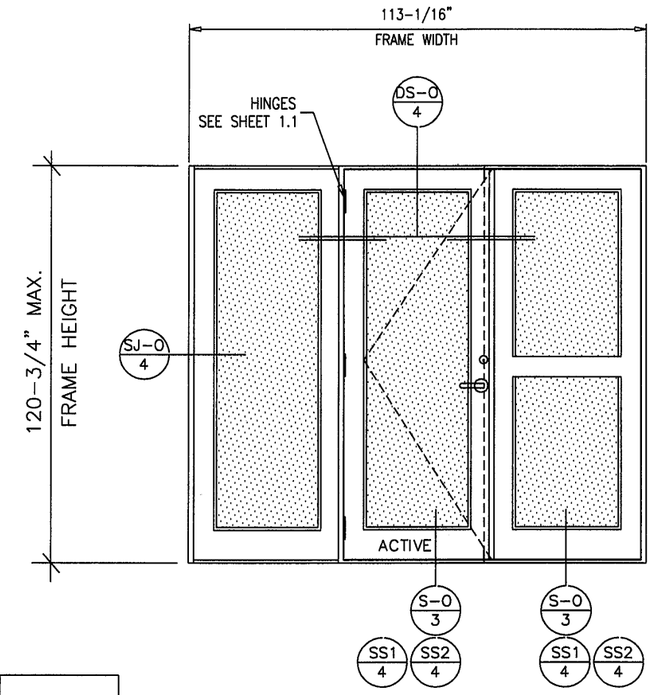

NOMINAL PANEL WIDTH	DOOR/SIDELITE PANEL WIDTH	PANEL OPG. WIDTH
2/0	23-3/4"	12-7/8"
2/6	29-3/4"	18-7/8"
3/0	35-3/4"	24 7/8"
3/6	41-3/4"	30-7/8"

NOMINAL PANEL HEIGHT	DOOR/SIDELITE PANEL HEIGHT	PANEL OPG. HEIGHT
6/8	78-7/8"	66-1/2"
7/0	82-7/8"	70-1/2"
7/6	88-7/8"	76-1/2"
8/0	94-7/8"	82-1/2"
8/6	100-7/8"	88-1/2"
9/0	106-7/8"	94-1/2"
9/6	112-7/8"	100-1/2"
10/0	118-7/8"	106-1/2"

FRAME HEIGHT = PANEL HEIGHT + 1-7/8" (STD. THRESHOLD)
FRAME HEIGHT = PANEL HEIGHT + 1-5/8" (ADA THRESHOLD)
FRAME WIDTH = PANEL WIDTH + 2-3/4"

LEGEND

___ -O – OUTSWING DOOR DETAIL

☐ – ITEM DESCRIPTION (see sheet 2 of 7)

STEPS TO USE CHARTS
SEE SHEETS 6 & 7.

NOTE:
EGRESS REQUIREMENTS TO BE REVIEWED BY BUILDING OFFICIAL.

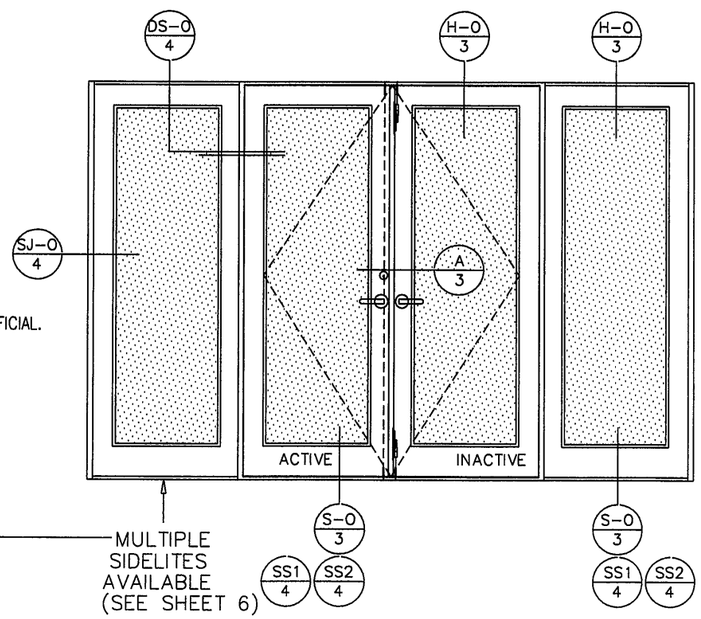

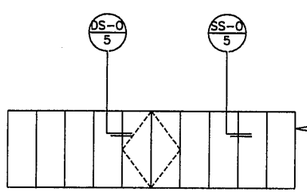

Engr: JAVAD AHMAD
CIVIL
FLA. PE # 70592
C.A.N. 3538

JUN 29 2012

Approved as complying with the Florida Building Code
Date OCT 25, 2012
NOA# 12-0706.02
Miami Dade Product Control

DWG. NO.: W12-22

CGI WINDOWS & DOORS
10100 northwest 25 street miami, florida 33172

product : Series 450 Outswing Doors & Sidelites

date : 05-22-12 | sheet 1 of 7

TYPICAL ELEVATIONS

	10A		10AA		10B		10C & 10CC		10D & 10E		10 F	
DOOR HEIGHT	EXT.(+)	INT.(−)	EXT.(+)	INT.(−)	EXT.(+)	INT.(−)	EXT.(+)	INT.(−)	EXT.(+)	INT.(−)	EXT.(+)	INT.(−)
84"	90.0	90.0	100.0	110.0	100.0	110.0	65.0	65.0	80.0	80.0	100.0	110.0
96-3/4"	90.0	90.0	100.0	110.0	100.0	110.0	65.0	65.0	70.0	70.0	90.0	90.0
108-3/4"	–	–	100.0	110.0	100.0	110.0	–	–	–	–	90.0	90.0
120-3/4"	–	–	70.0	70.0	70.0	70.0	–	–	–	–	70.0	70.0

10A : COPPER CREEK W/ CGI 3 POINT
10AA : BALDWIN W/ CGI 3 POINT
10B : REGENT COMMERCIAL 3 POINT
10C : BALDWIN SINGLE POINT LOCK
10CC : COPPER CREEK SINGLE POINT LOCK
10D : DOR-O-MATIC SERIES 1690
10E : JACKSON SERIES 2085/2065
10F : SURFACE MOUNTED LOCK

LH CONFIGURATIONS SHOWN
RH SIMILAR (SEE SHEET 1 FOR SIZES)

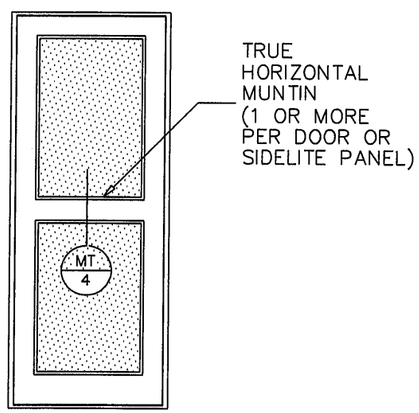

OPTIONAL TRUE MUNTINS
DOOR OR SIDELITE

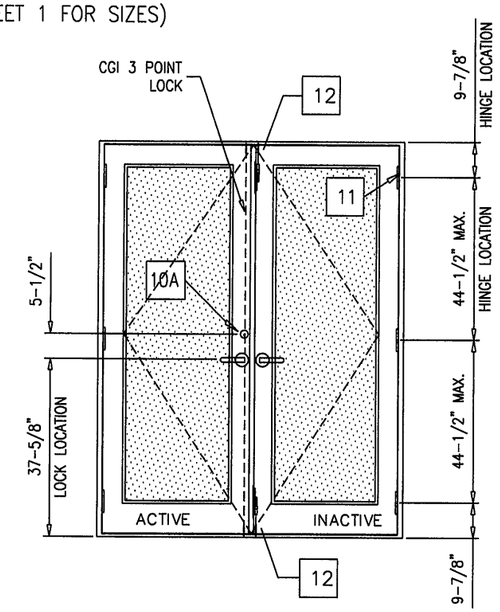

RESIDENTIAL HARDWARE

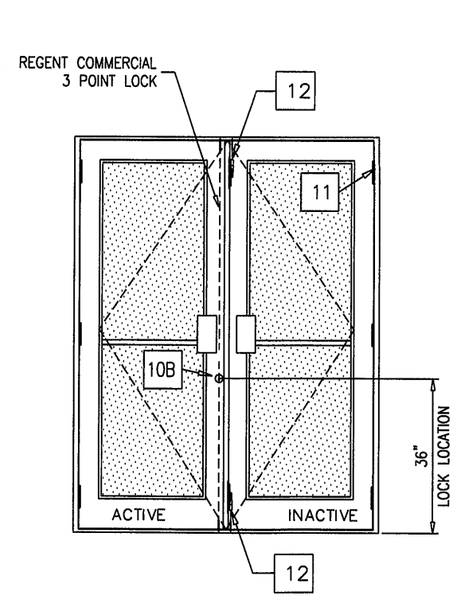

COMMERCIAL HARDWARE

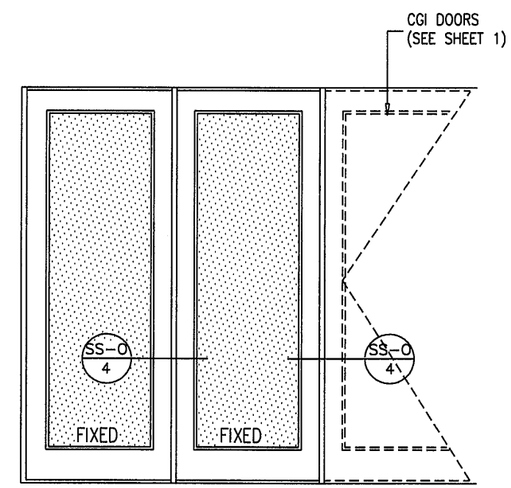

LEGEND

___ -O - OUTSWING DOOR DETAIL

☐ - ITEM DESCRIPTION (see sheet 2 of 7)

HINGE LOCATIONS		
MAX. DOOR HEIGHT	NO. REQD.	MAX. SPACING
UPTO 90-3/4"	3	35 1/2"
ABOVE 90-3/4" UPTO 120"	4	44 1/2"

DOORS WITH 3 HINGES LIMITED TO 100 PSF

FRAME HEIGHT = PANEL HEIGHT + 1-7/8" (STD. THRESHOLD)
FRAME HEIGHT = PANEL HEIGHT + 1-5/8" (ADA THRESHOLD)
FRAME WIDTH = PANEL WIDTH + 2-3/4"

HARDWARE DESCRIPTION

Engr: JAVAD AHMAD
CIVIL
FLA. PE # 70592
C.A.N. 3538

JUN 29 2012

Approved as complying with the Florida Building Code
Date 10/25/12
NOA# 12-0706.02
Miami Dade Product Control
By Ishaq I. Lhanda

DWG. NO.: W12-22

CGI
WINDOWS & DOORS
10100 northwest 25 street miami, florida 33172

product :	Series 450 Outswing Doors & Sidelites
date : 05-22-12	sheet 1.1 of 7

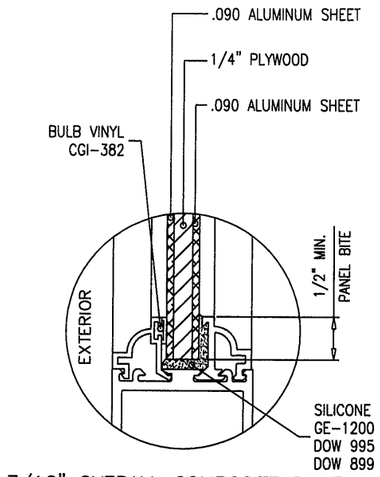

7/16" OVERALL COMPOSITE PANEL

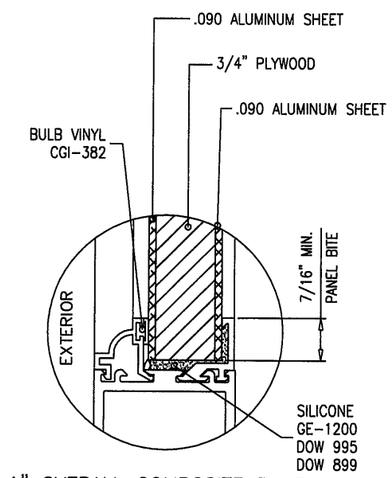

1" OVERALL COMPOSITE PANEL

PANEL STOP OPTIONS

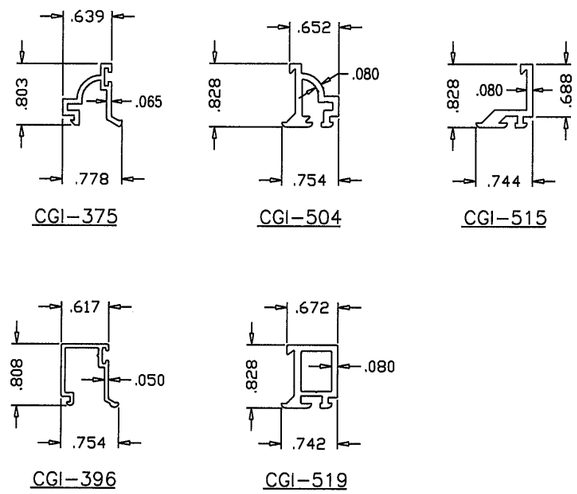

PANEL STOPS CAN BE SQUARE OR OGEE

Approved as complying with the Florida Building Code
Date 10/25/12
NOA# 12-0706.02
Miami Dade Product Control
By Ishaq I. Chauda

Engr: JAVAD AHMAD
CIVIL
FLA. PE # 70592
C.A.N. 3538

JUN 29 2012

DWG. NO.: W12-22

CGI
WINDOWS & DOORS
10100 northwest 25 street miami, florida 33172

product :	Series 450 Outswing Doors & Sidelites
date : 05-22-12	sheet 1.2 of 7

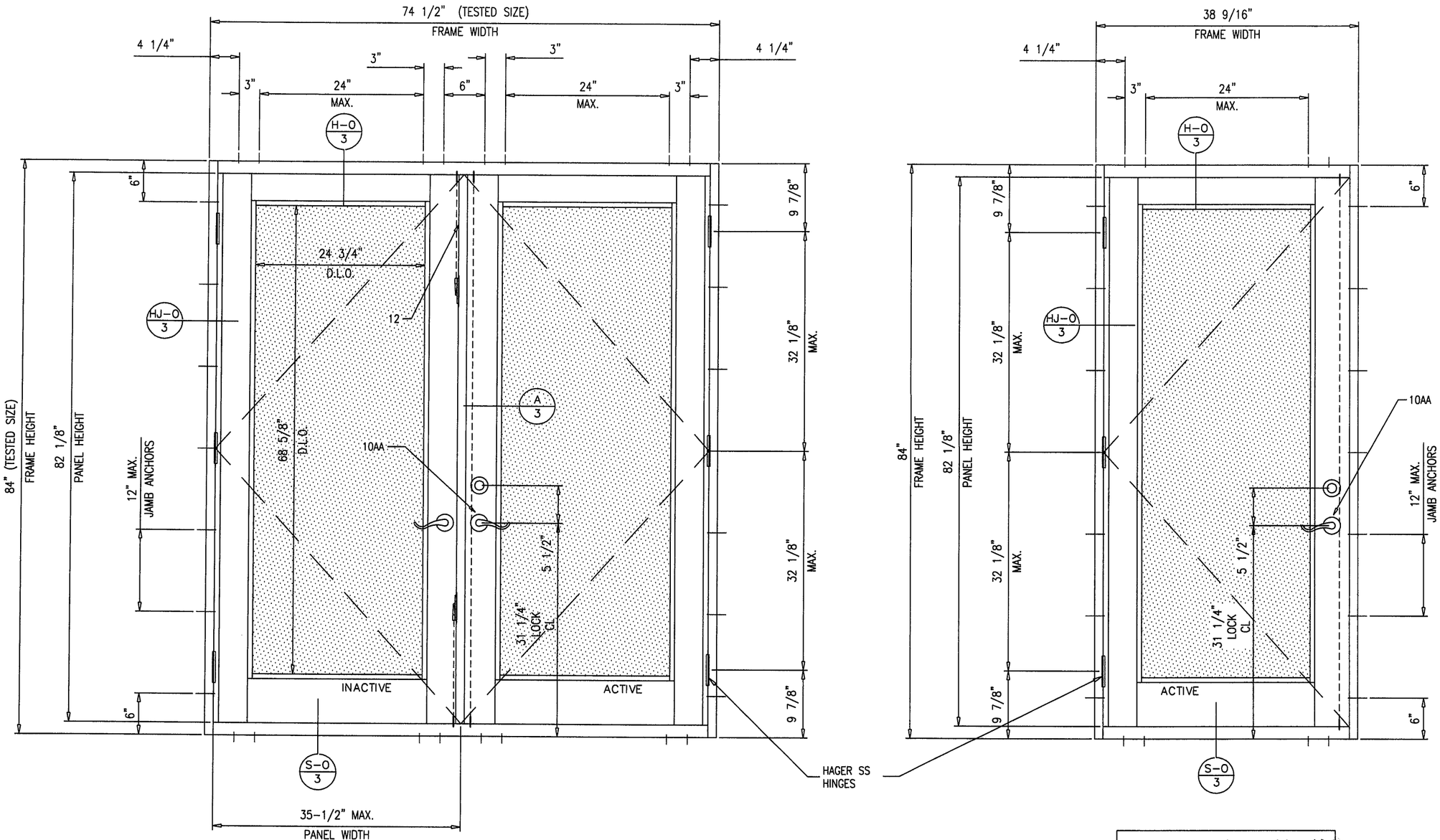

LARGE MISSILE IMPACT

MAXIMUM DESIGN LOAD RATING =	+ 100.0
(FOR SIZES SHOWN ABOVE OR SMALLER UPTO CODE LIMIT)	− 132.0 PSF
LOCK OPTION 10AA CGI 3 POINT MECHANISM W/ BALDWIN SERIES 8200 DEAD BOLT	

Engr: JAVAD AHMAD
CIVIL
FLA. PE # 70592
C.A.N. 3538

JUN 29 2012

Approved as complying with the Florida Building Code
Date 10/25/12
NOAA 12-0706.02
Miami Dade Product Control
By Ishaq I. Chanda

DWG. NO.: W12-22

CGI
WINDOWS & DOORS
10100 northwest 25 street miami, florida 33172

product :	Series 450 Outswing Doors & Sidelites
date : 05-22-12	sheet 1.3 of 7

CVR PANIC HARDWARE

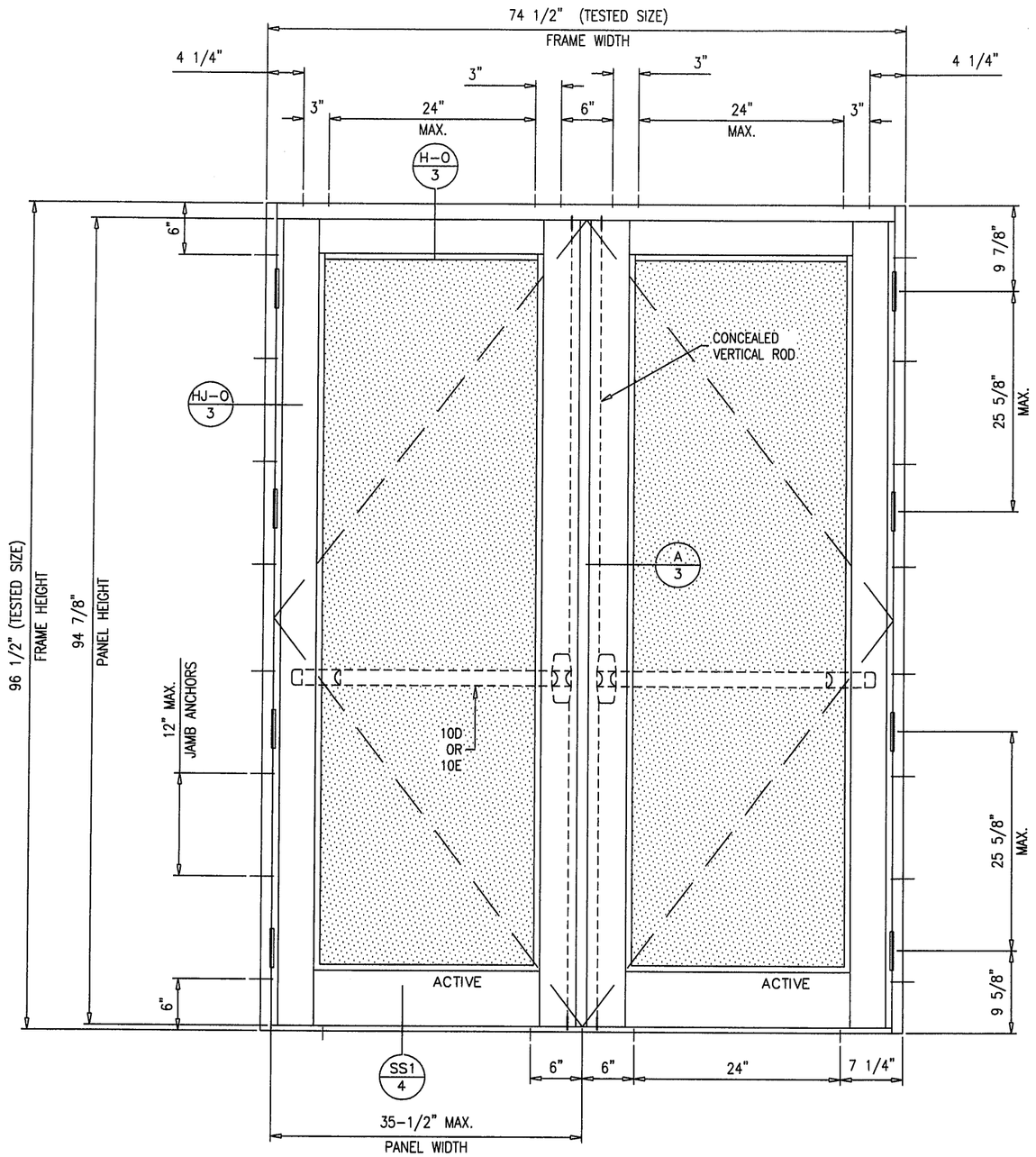

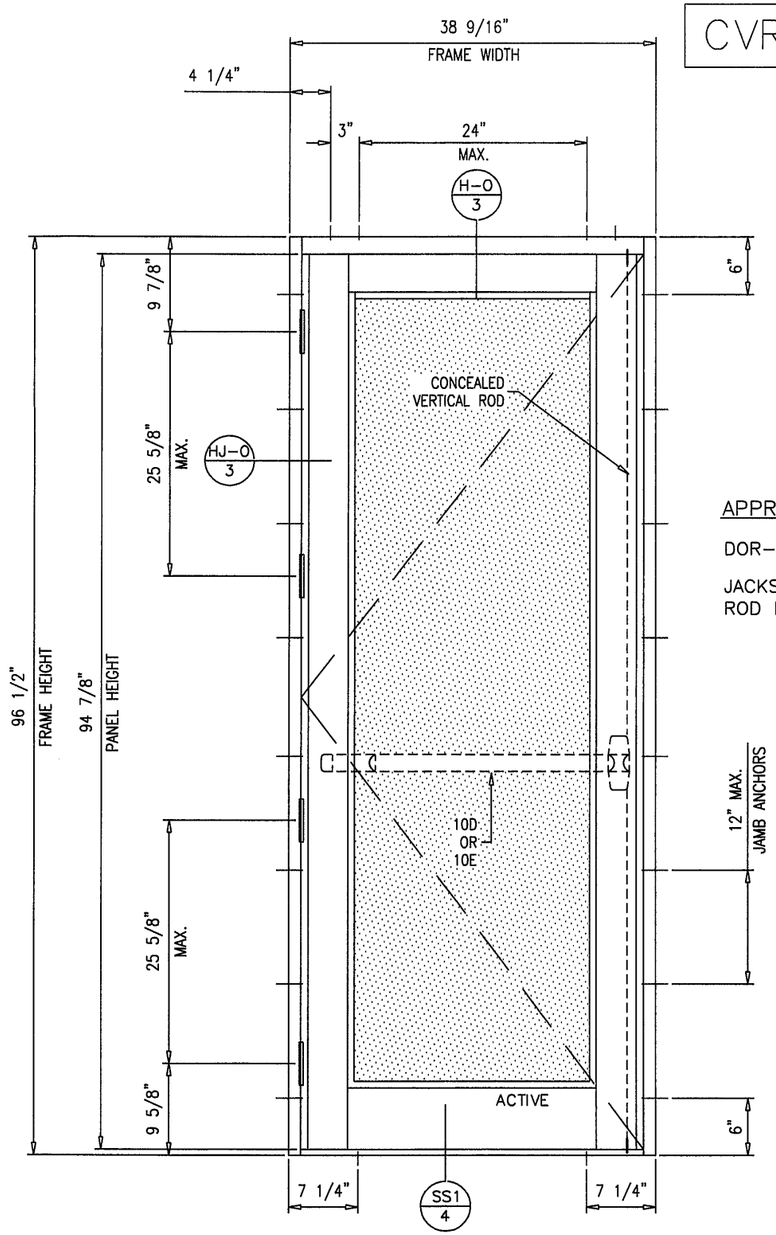

APPROVED PANIC HARDWARE FOR DOORS

DOR-O-MATIC SERIES 1690 TOUCHBAR EXIT DEVICE

JACKSON SERIES 2085/2086 CONCEALED VERTICAL ROD EXIT DEVICE

DOORS LOAD CAPACITY - PSF			
FRAME HEIGHT	FRAME WIDTH	EXT.(+)	INT.(-)
96-1/2"	74-1/2"	70.0	70.0
84-1/2"	74-1/2"	80.0	80.0

DOOR NOT RATED FOR WATER INFILTRATION RESISTANCE.

LOCK OPTIONS 10D AND 10E

Engr: JAVAD AHMAD
CIVIL
FLA. PE # 70592
C.A.N. 3538

JUN 29 2012

Approved as complying with the Florida Building Code
Date OCT 25 2012
NOA# 12-0706.02
Miami Dade Product Control
By Ishaq I. Chanda

DWG. NO.: W12-22

CGI WINDOWS & DOORS
10100 northwest 25 street miami, florida 33172

product : Series 450 Outswing Doors & Sidelites

date : 05-22-12 | sheet 1.4 of 7

BILL OF MATERIALS

ITEM	DESCRIPTION
1	#12 X 1 1/4" HEX HEAD S/S SMS (3 PER CORNER CONNECTION)
2A	3/8-16 FULLY THREADED CONTINUOUS ROD
2B	3/8-16 HEX NUT
2C	1 1/2" X 1 1/2" X 3/16"THK. ALUMINUM PLATE
3	SHEAR CLIP (EXT. NO. 506)
4	DOUBLE 9/32" DIA. JAMB INSTLL. HOLES AT 6" FROM ENDS & 24" O.C. MAX.
5	9/32" DIA. HEAD & SILL INSTLL. HOLES AT 6" FROM ENDS, 3 @ CENTER OF PAIRS SPACED 6" O.C. & 24" O.C. MAX.
6	#10 X 1" PH-PH-SS TEKS SCREW, @ 3" & 7" FROM ENDS & 19-3/8" O.C. MAX.
7	#14 X 3/4" HEX HEAD S/S TEKS SCREW AT 6" FROM ENDS & 24 3/16" O.C. MAX.
8	.320 HIGH WOOL PILE WITH CENTER FIN (ULTRAFAB # 3032)
9	.350 HIGH FOAM-TITE WEATHERSEAL (AMESBURY # 32011)
10	ACTIVE PANEL LOCK OPTIONS (SEE SHEET 1.1 FOR LIMITS)
10A	CGI CUSTOM 3 POINT LOCK 4503PL, CONSISTING OF (2) CGI CUSTOM END BOLTS (TOP & BOTTOM), ATTACHED WITH #10 X 3/4" PH SMS, (1) CGI CUSTOM INTERIOR LINKAGE MECHANISM, (1) DEADBOLT BY COPPER CREEEK SERIES E MODEL D82410.
10AA	CGI CUSTOM 3 POINT LOCK 4503PL, CONSISTING OF (2) CGI CUSTOM END BOLTS (TOP & BOTTOM), ATTACHED WITH #10 X 3/4" PH SMS, (1) CGI CUSTOM INTERIOR LINKAGE MECHANISM, (1) DEADBOLT BY BALDWIN SERIES 8200, KWIKSET 780.
10B	REGENT COMMERCIAL 2222 THREE POINT LOCK MECHANISM WITH MORTISE LOCK.
10C	SINGLE POINT LOCK (1) DEADBOLT BY BALDWIN SERIES 8200.
10CC	SINGLE POINT LOCK (1) DEADBOLT BY COPPER CREEK SERIES D82410.
10D	DOR-O-MATIC SERIES 1690 TOUCHBAR PANIC EXIT DEVICE WITH CONCEALED VERTICAL ROD SEE SHEET 1.4.
10E	JACKSON 20 SERIES PANIC EXIT WITH 2085/2086 CONCEALED VERTICAL ROD EXIT DEVICE SEE SHEET 1.4.
10F	CGI CUSTOM SURFACE MOUNTED SLIDE BOLTS WITH CGI END BOLTS AT ACTIVE LEAF (AT TOP & BOTTOM) WITH BALDWIN SERIES 8200 DEAD BOLT.
11	HAGER 4 1/2" X 4" HINGE IN SOLID BRASS OR STAINLESS STEEL CGI 4-1/2" X 4" HINGE IN ALUMINUM SECURED WITH (8) #12-24 X 1/2" F.H. M.S. (3 PER PANEL UP TO 7'-6 3/4" HIGH) (4 PER PANEL OVER 7'-6 3/4")
12	CGI FLUSHBOLT AT TOP & BOTTOM OF INACTIVE LEAF, HOUSING ATTACHED TO PANEL STILE WITH #10 X 3/4" PH SMS, ACTIVATOR ATTACHED WITH #8 X 1/2" PH SMS.
13	SEE SHEET 1.2 FOR GLAZING OPTIONS
14	SILICONE GE-1200, DOW 995, DOW 899
17	1/2" X 1/2" CONTINUOUS CLOSED CELL FOAM TAPE WITH ONE SIDE ADHESIVE
18	PLASTIC WEEP BAFFLE
19	7/8" X 5" X 1/8" THK. CONTINUOUS ALUMINUM SILL ANGLE ADAPTOR

EXT. = EXTRUSION LIST 500A, 501, 502, 503, 504, 507, 509, 510, 514, 515, 519, 539, & 540 ALL EXTRUSIONS ARE 6063-T6.

375, 396, 505, 508, 511 EXTRUSIONS ARE 6063-T5.

Engr: JAVAD AHMAD
CIVIL
FLA. PE # 70592
C.A.N. 3538

JUN 29 2012

Approved as complying with the Florida Building Code
Date 10/25/12
NOAA 12-0706.02
Miami Dade Product Control
By Ishaq I. Chanda

DWG. NO.: W12-22

CGI WINDOWS & DOORS
10100 northwest 25 street miami, florida 33172

product :	Series 450 Outswing Doors & Sidelites
date : 05-22-12	sheet 2 of 7

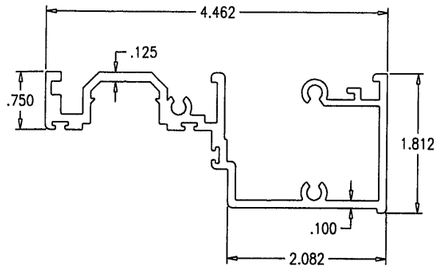

CGI-507
DOOR FRAME HEAD/SILL

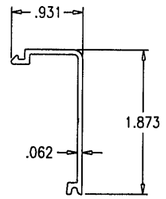

CGI-511
JAMB COVER

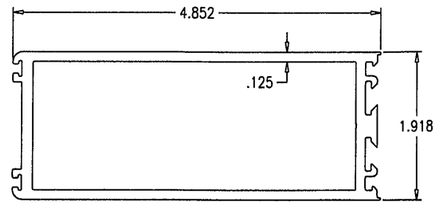

CGI-502
JAMB/LOCK/SIDELITE STILE

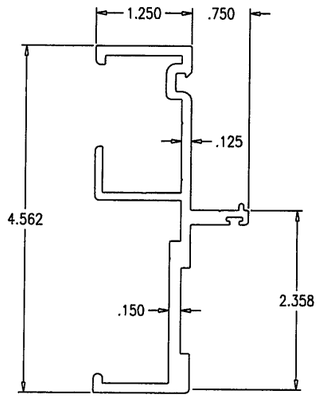

CGI-509
FRAME JAMB/MULLION

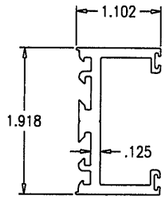

CGI-503
NARROW SIDELITE STILE

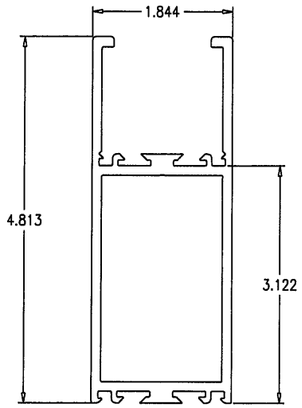

CGI-500A
TOP RAIL

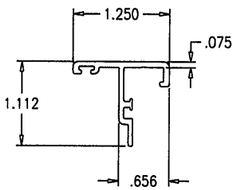

CGI-505
ASTRAGAL

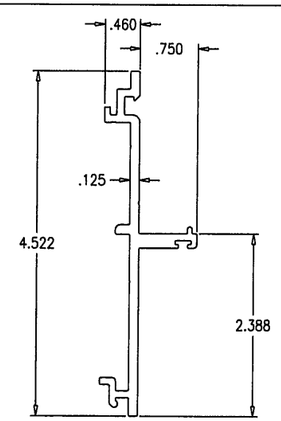

CGI-510
SIDELITE MULLION

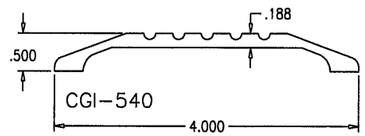

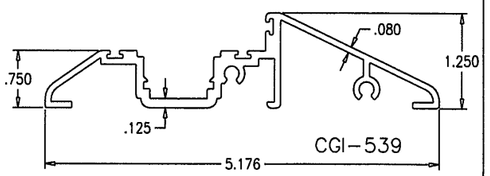

SADDLE THRESHOLDS

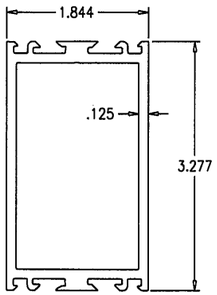

CGI-514
HORIZONTAL MUNTIN

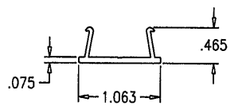

CGI-508
FRAME COVER

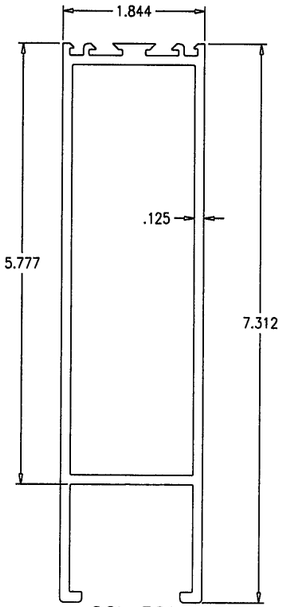

CGI-501
BOTTOM RAIL

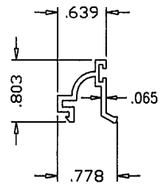

CGI-375

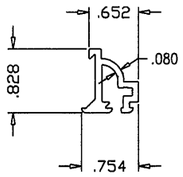

CGI-504

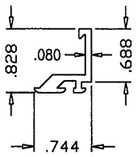

CGI-515

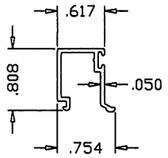

CGI-396

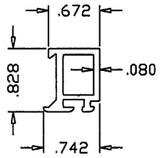

CGI-519

Engr: JAVAD AHMAD
CIVIL
FLA. PE # 70592
C.A.N. 3538

JUN 29 2012

Approved as complying with the Florida Building Code
Date 10/25/12
NOA# 12-0706.02
Miami Dade Product Control
By Ishwar L. Chanda

DWG. NO.: W12-22

CGI WINDOWS & DOORS
10100 northwest 25 street miami, florida 33172

product : Series 450 Outswing Doors & Sidelites	
date : 05-22-12	sheet 2.1 of 7

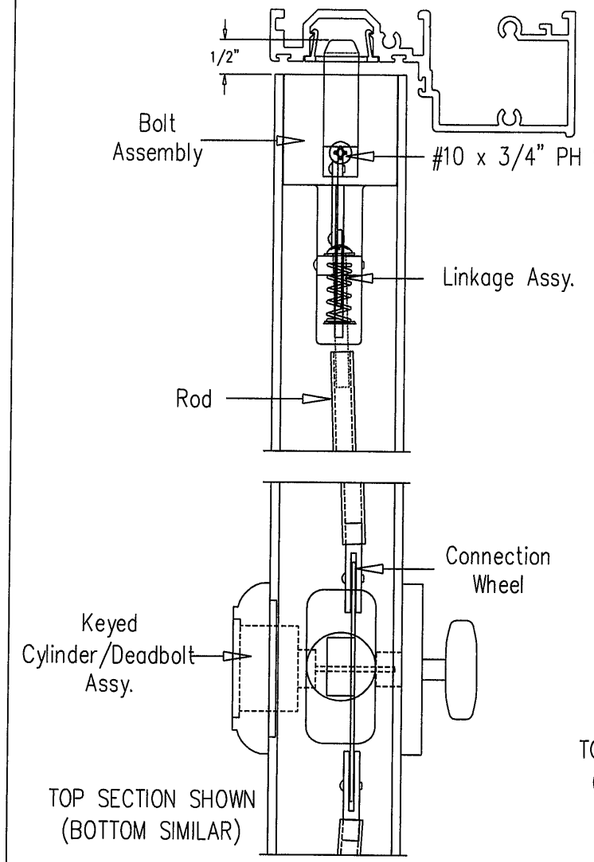

CGI CUSTOM 3-POINT LOCK

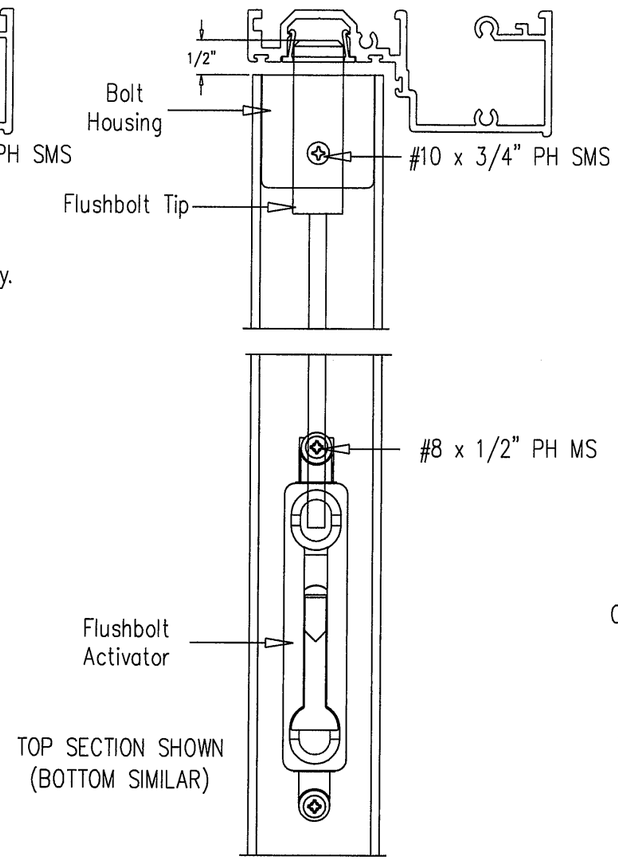

12 Flushbolts (Inactive Panel)

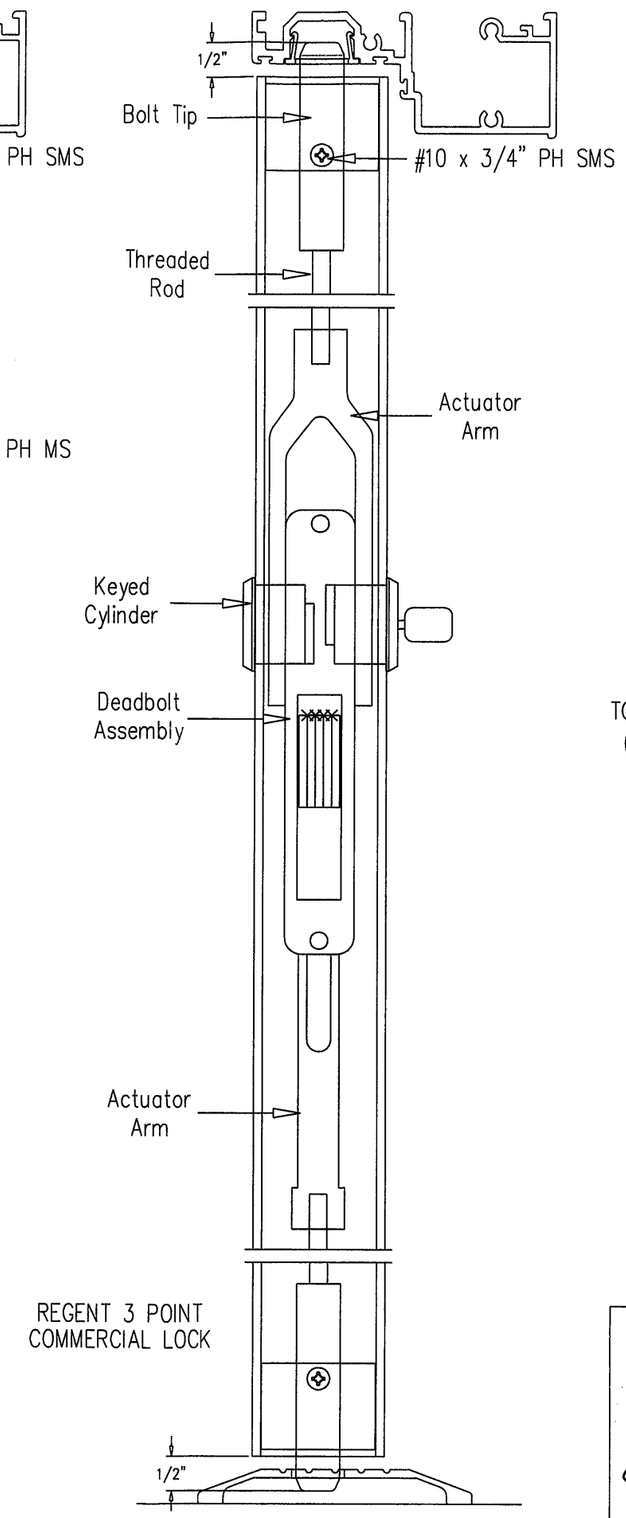

REGENT 3 POINT COMMERCIAL LOCK

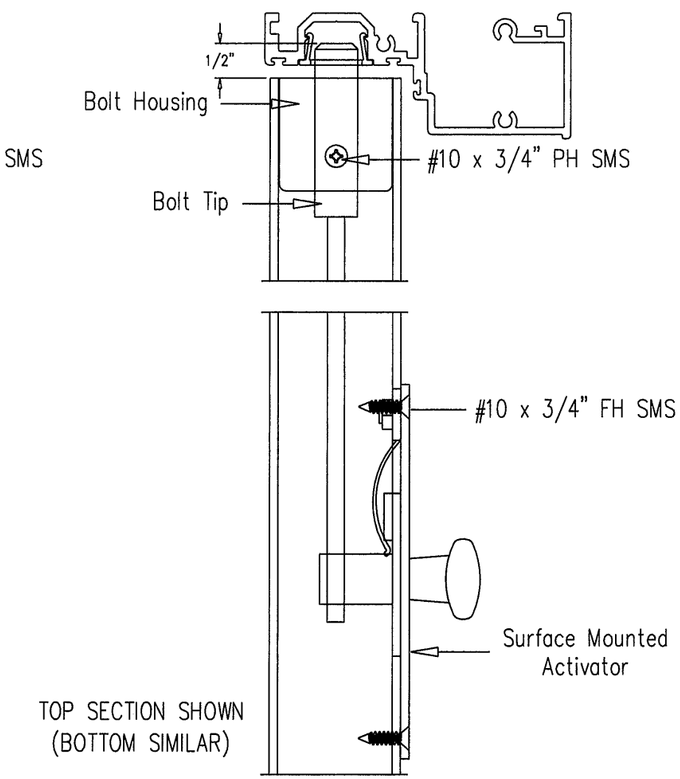

SURFACE MOUNT SLIDE BOLT WITH BALDWIN DEAD BOLT

Approved as complying with the Florida Building Code
Date 10/23/12
NOA# 12-0706.02
Miami Dade Product Control
By

DWG. NO.: W12-22

Engr: JAVAD AHMAD
CIVIL
FLA. PE # 70592
C.A.N. 3538

JUN 29 2012

CGI WINDOWS & DOORS
10100 northwest 25 street miami, florida 33172

product : Series 450 Outswing Doors & Sidelites	
date : 05-22-12	sheet 2.2 of 7

Dor-O-Matic 1690

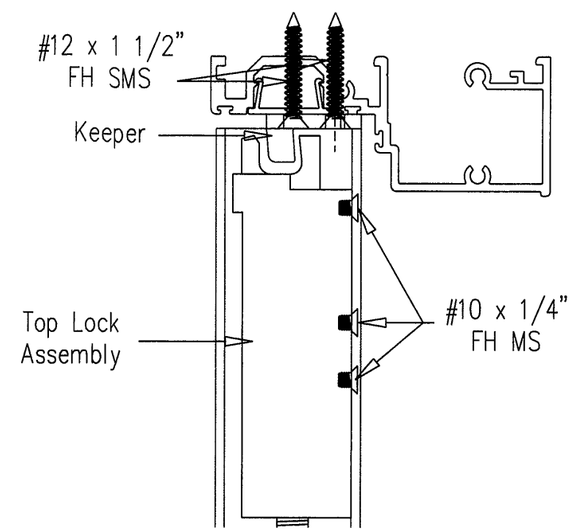

Jackson 20861

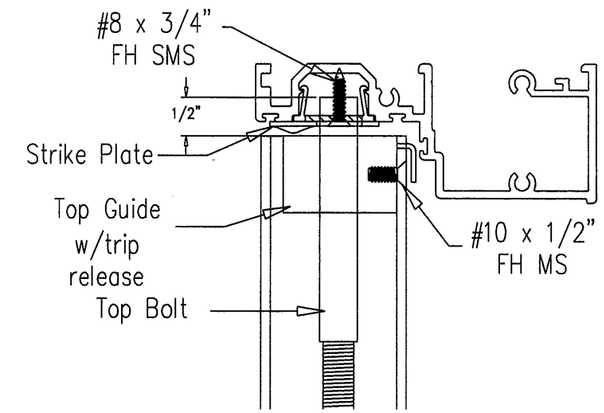

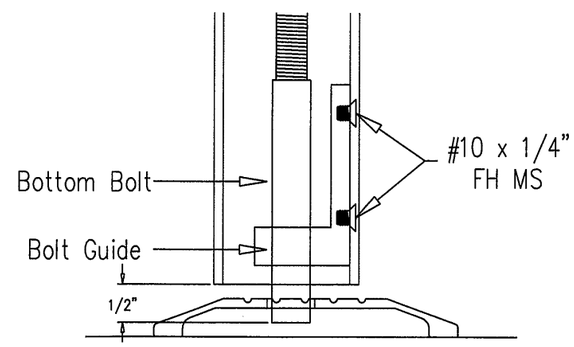

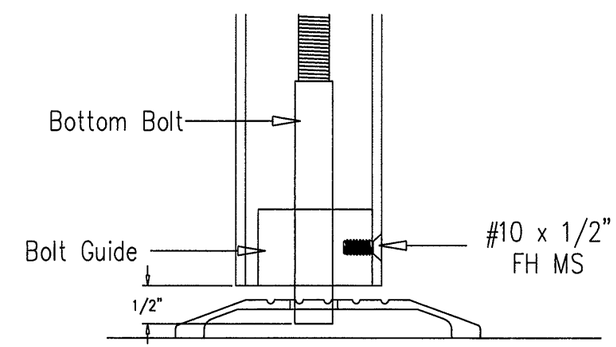

Engr: JAVAD AHMAD
CIVIL
FLA. PE # 70592
C.A.N. 3538

JUN 29 2012

Approved as complying with the Florida Building Code
Date 10/23/12
NOA# 12-0706.02
Miami Dade Product Control
By Ishwar L. Chand

DWG. NO.: W12-22

CGI
WINDOWS & DOORS
10100 northwest 25 street miami, florida 33172

product : Series 450 Outswing Doors & Sidelites	
date : 05-22-12	sheet 2.3 of 7

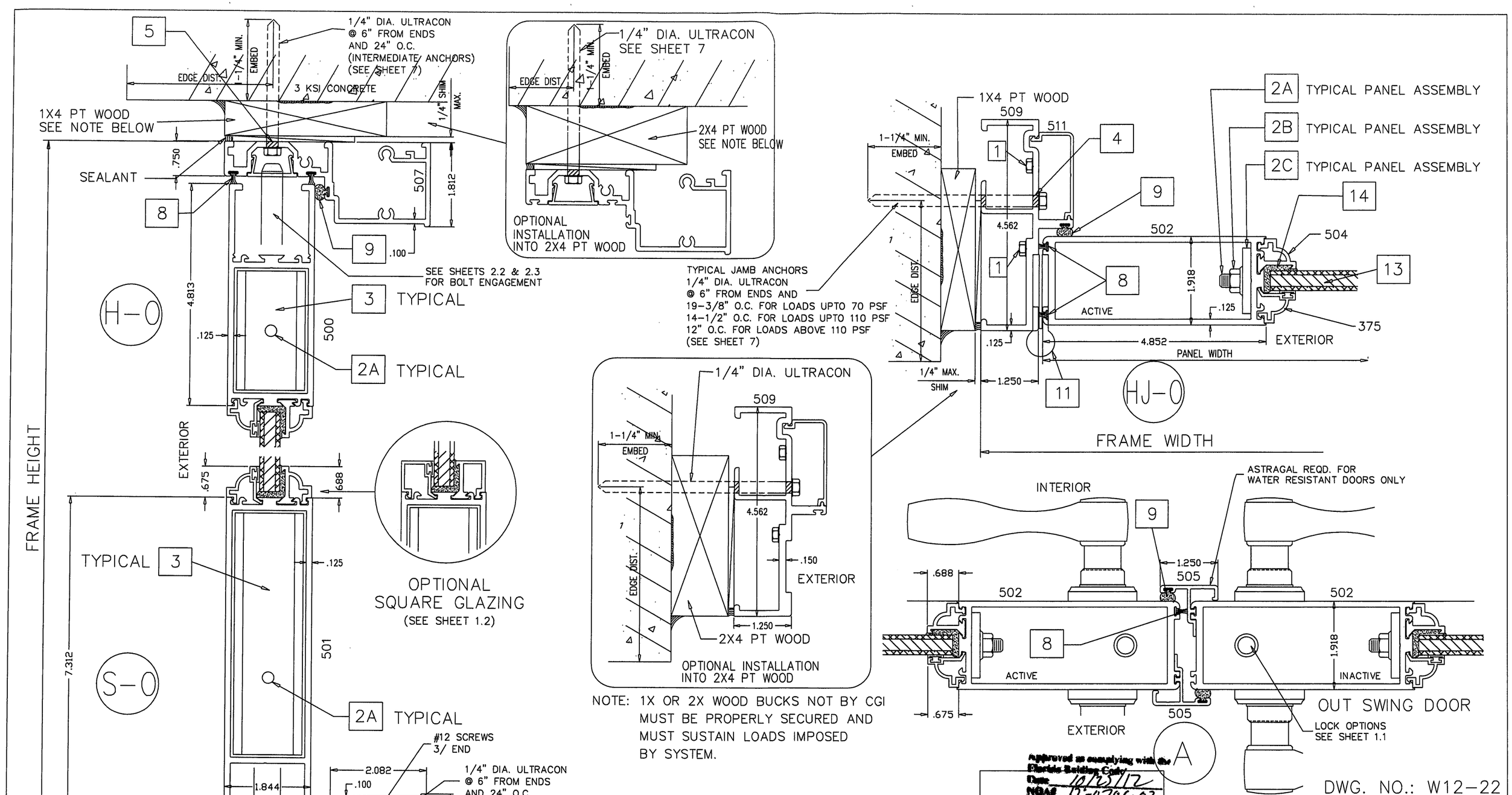

NOTE: 1X OR 2X WOOD BUCKS NOT BY CGI MUST BE PROPERLY SECURED AND MUST SUSTAIN LOADS IMPOSED BY SYSTEM.

NOTE:
ALL ANCHOR CONDITIONS SHOWN ON SHEETS 3, 4 AND 5 MAY BE DIRECTLY TO MASONRY WITH 1/4" MAX. SHIM SPACE WITHOUT VARIATION IN CAPACITY.

DWG. NO.: W12-22

Engr: JAVAD AHMAD
CIVIL
FLA. PE # 70592
C.A.N. 3538

JUN 29 2012

Approved as complying with the Florida Building Code
Date 10/25/12
NOAS 12-0706.02
Miami Dade Product Control
By Ishaq I. Chand

CGI
WINDOWS & DOORS
10100 northwest 25 street miami, florida 33172

product :	Series 450 Outswing Doors & Sidelites
date : 05-22-12	sheet 3 of 7

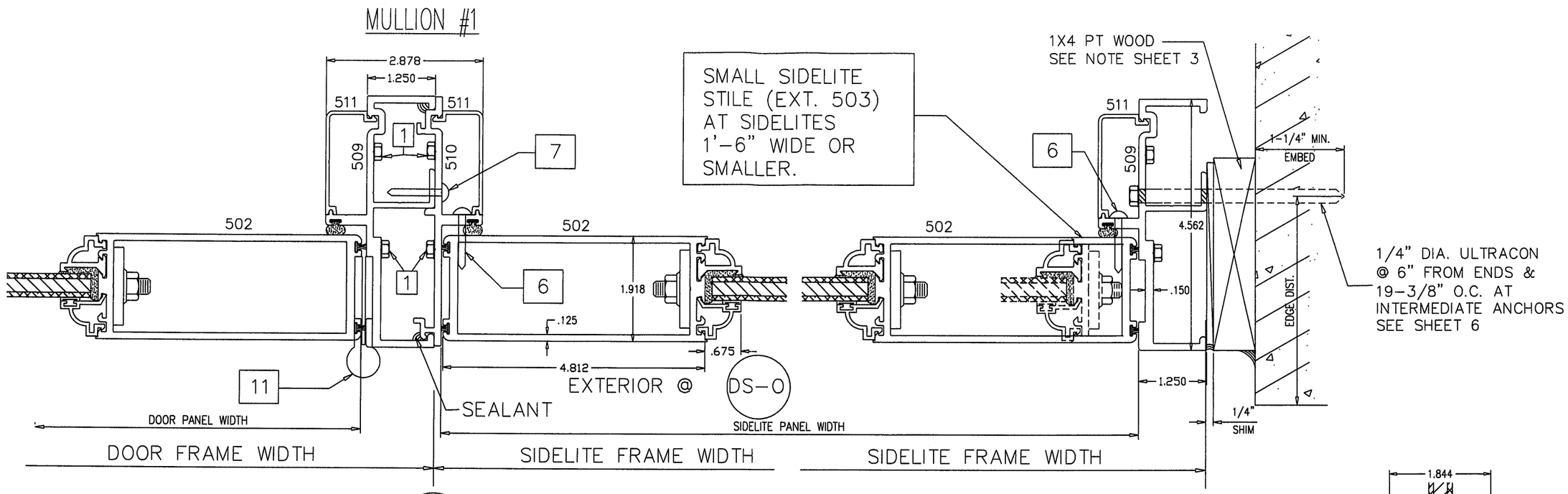

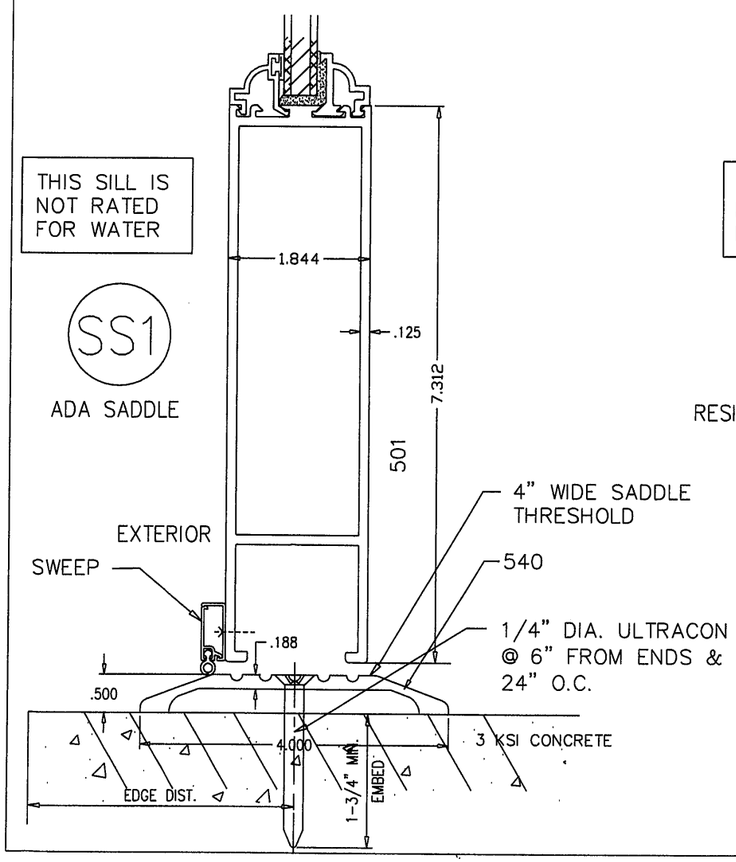

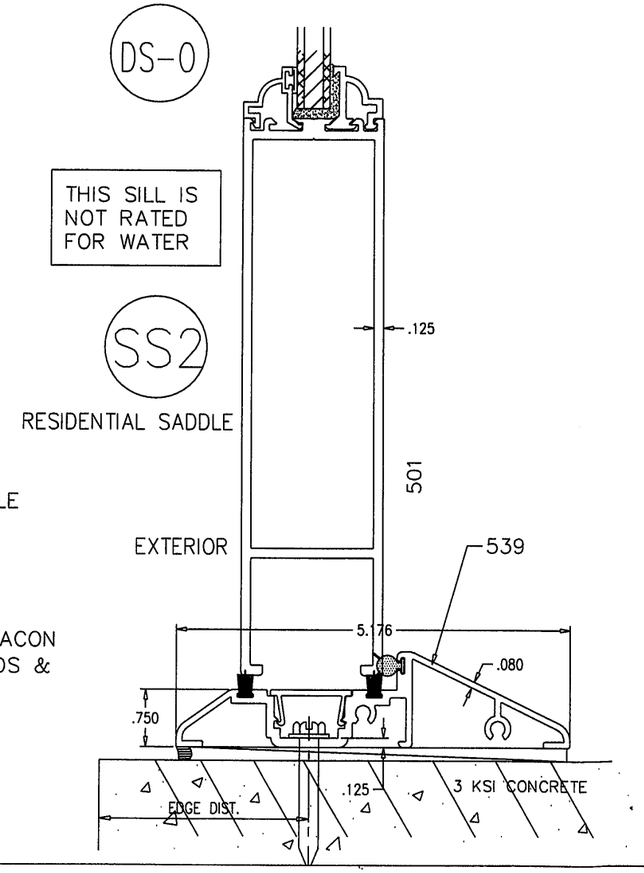

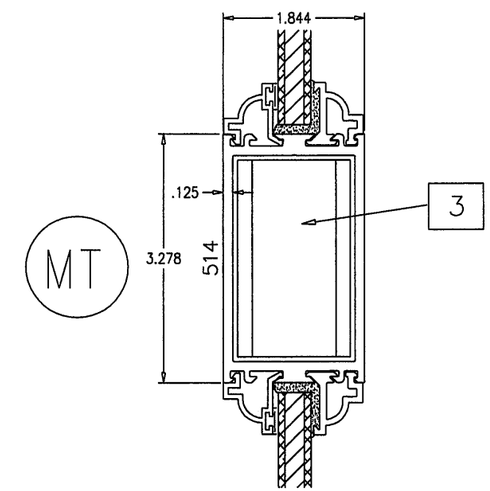

REFER TO SHEET 2 OF 7 FOR TYPICAL BILL OF MATERIALS

Engr: JAVAD AHMAD
CIVIL
FLA. PE # 70592
C.A.N. 3538

JUN 29 2012

Approved as complying with the Florida Building Code
Date 10/25/12
NOAC 12-0706.02
Miami-Dade Product Control
By Shaq J. Chand

DWG. NO.: W12-22

CGI WINDOWS & DOORS
10100 northwest 25 street miami, florida 33172

product : Series 450 Outswing Doors & Sidelites	
date : 05-22-12	sheet 4 of 7

MULLION TYPE 1

WIDE STILE-WIDE STILE

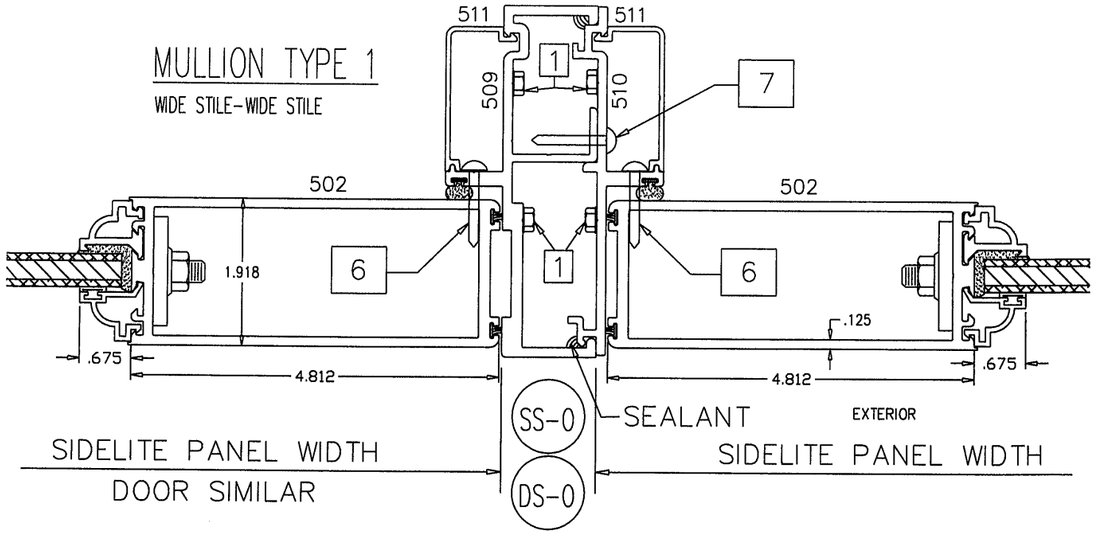

MULLION TYPE 2

WIDE STILE-NARROW STILE

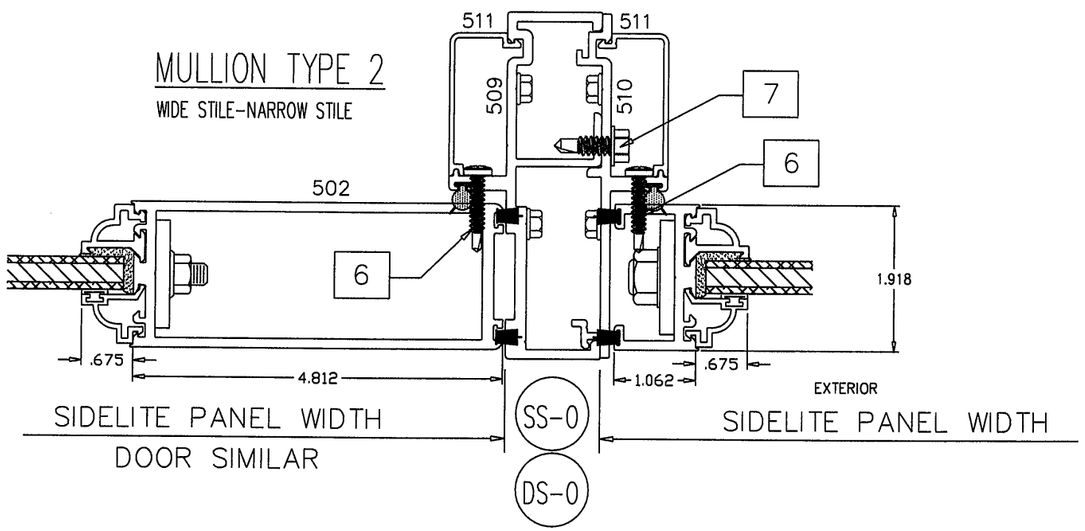

MULLION TYPE 3

NARROW STILE-NARROW STILE

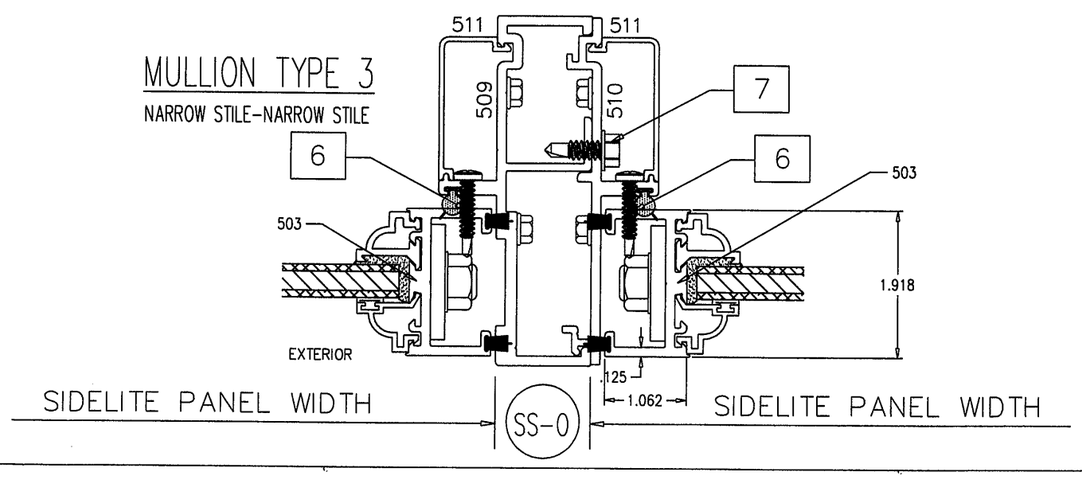

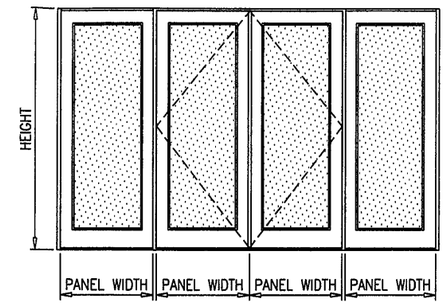

$$\text{WIDTH (W)} = \frac{\text{DOOR PANEL + FIXED PANEL}}{2}$$

MULLION PERFORMANCE CHART
DESIGN LOAD CAPACITY – PSF

NOMINAL DIMS.		MULL TYPE 1		MULL TYPE 2		MULL TYPE 3	
WIDTH (W)	HEIGHT	EXT.(+)	INT.(–)	EXT.(+)	INT.(–)	EXT.(+)	INT.(–)
1/6	6/8	100.0	110.0	100.0	110.0	100.0	110.0
2/0		100.0	110.0	100.0	110.0	100.0	110.0
2/6		100.0	110.0	100.0	110.0	–	–
3/0		100.0	110.0	100.0	110.0	–	–
3/6		100.0	110.0	70.0	70.0	–	–
1/6	7/0	100.0	110.0	100.0	110.0	100.0	110.0
2/0		100.0	110.0	100.0	110.0	100.0	110.0
2/6		100.0	110.0	100.0	110.0	–	–
3/0		100.0	110.0	100.0	110.0	–	–
3/6		100.0	110.0	–	–	–	–
1/6	7/6	100.0	110.0	100.0	110.0	100.0	110.0
2/0		100.0	110.0	100.0	110.0	70.0	70.0
2/6		100.0	110.0	100.0	110.0	–	–
3/0		100.0	110.0	70.0	70.0	–	–
3/6		100.0	110.0	–	–	–	–
1/6	8/0	100.0	110.0	100.0	110.0	100.0	110.0
2/0		100.0	110.0	100.0	110.0	70.0	70.0
2/6		100.0	110.0	100.0	110.0	–	–
3/0		100.0	110.0	–	–	–	–
3/6		100.0	104.6	–	–	–	–
1/6	8/6	100.0	110.0	100.0	110.0	100.0	110.0
2/0		100.0	110.0	100.0	110.0	–	–
2/6		100.0	110.0	100.0	100.4	–	–
3/0		98.9	98.9	–	–	–	–
3/6		70.0	70.0	–	–	–	–
1/6	9/0	100.0	110.0	100.0	110.0	100.0	110.0
2/0		100.0	110.0	100.0	104.1	–	–
2/6		98.1	98.1	70.0	70.0	–	–
3/0		82.9	82.9	–	–	–	–
1/6	9/6	70.0	70.0	70.0	70.0	100.0	110.0
2/0		70.0	70.0	70.0	70.0	–	–
2/6		70.0	70.0	–	–	–	–
3/0		70.0	70.0	–	–	–	–
1/6	10/0	70.0	70.0	70.0	70.0	70.0	70.0
2/0		70.0	70.0	70.0	70.0	–	–
2/6		70.0	70.0	–	–	–	–
3/0		59.9	59.9	–	–	–	–

REFER TO SHEET 2 OF 7 FOR
TYPICAL BILL OF MATERIALS

Engr: JAVAD AHMAD
CIVIL
FLA. PE # 70592
C.A.N. 3538

JUN 29 2012

Approved as complying with the Florida Building Code
Date 10/25/12
NOAA 12-0706.02
Miami-Dade Product Control
By Ishaq I. Chanda

DWG. NO.: W12-22

CGI
WINDOWS & DOORS
10100 northwest 25 street miami, florida 33172

product : Series 450 Outswing Doors & Sidelites

date : 05-22-12 | sheet 5 of 7

PANEL PERFORMANCE CHART FOR
SINGLE & DOUBLE DOORS & SINGLE SIDELITES
(NARROW STILE SIDELITES LIMITED TO 18" OR LESS)
DESIGN LOAD CAPACITY – PSF

NOMINAL DIMS.		7/16" COMPOSITE PANELS 1" COMPOSITE PANELS	
NOM. PANEL WIDTH	NOM. PANEL HEIGHT	EXT. (+)	INT. (-)
2/0	6/8	100.0	110.0
2/6		100.0	110.0
3/0		100.0	110.0
3/6		100.0	110.0
2/0	7/0	100.0	110.0
2/6		100.0	110.0
3/0		100.0	110.0
3/6		100.0	110.0
2/0	7/6	100.0	110.0
2/6		100.0	110.0
3/0		100.0	110.0
3/6		105.0	105.0
2/0	8/0	100.0	110.0
2/6		100.0	110.0
3/0		100.0	110.0
3/6		70.0	70.0
2/0	8/6	100.0	110.0
2/6		100.0	110.0
3/0		100.0	110.0
3/6		70.0	70.0
2/0	9/0	100.0	110.0
2/6		100.0	110.0
3/0		100.0	110.0
2/0	9/6	70.0	70.0
2/6		70.0	70.0
3/0		70.0	70.0
2/0	10/0	70.0	70.0
2/6		70.0	70.0
3/0		70.0	70.0

LOADS SHOWN ABOVE ARE FOR DOORS USING THRESHOLDS (S-0) IN ANY CONDITION AND (SS1) & (SS2) WHERE WATER INFILTRATION REQUIREMENTS ARE NOT APPLICABLE.

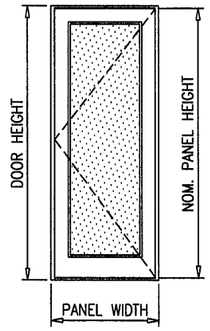

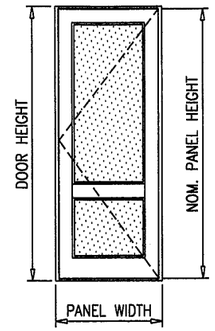

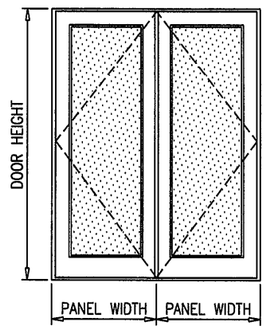

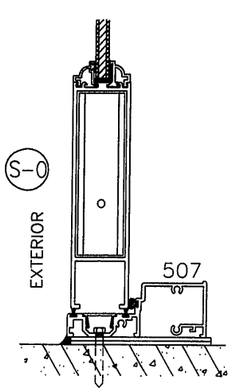

OUTSWING

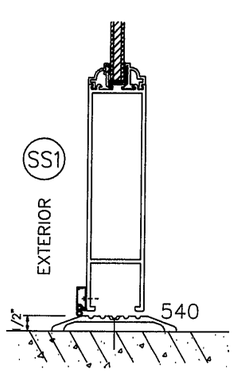

OUTSWING (SADDLE)

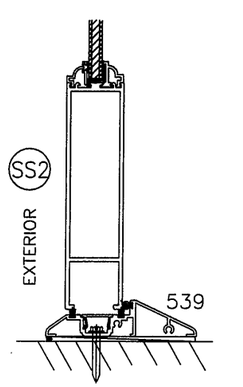

RESIDENTIAL (SADDLE)

THESE CHARTS CAN BE USED TO CHECK CAPACITY FOR SINGLE OR DOUBLE LEAF DOORS AND SIDELITES.

REFER TO TABLES ON SHEET 7 TO DETERMINE ANCHORS REQUIRED.

STEPS TO USE CHARTS:

1. DETERMINE WIND LOAD BASED ON PROVISIONS OF 2010 FLORIDA BLDG. CODE.
2. DETERMINE WATER INFILTRATION REQUIREMENTS BASED ON PROVISIONS OF FBC.
3. SELECT A DOOR SYSTEM I.E. OUTSWING AND TYPE OF THRESHOLD AND LOCK OPTIONS.
4. CHECK THE ALLOWABLE EXTERIOR AND INTERIOR LOADS FROM APPROPRIATE CHART. THE ALLOWABLE LOADS MUST MEET OR EXCEED THE DESIGN LOADS REQUIREMENTS.
5. SELECT AND CHECK ANCHORS TO MEET LOAD. (SEE SHEET 7)
6. FOR MULLED SIDELITE REFER TO MULLION CAPACITY.
7. LOWER DESIGN PRESSURE FROM LOCK, PANEL PERFORMANCE, MULLION AND ANCHOR CAPACITY AT SILL AND THRESHOLD TYPES SHALL CONTROL FOR THE ENTIRE SYSTEM.

Engr: JAVAD AHMAD
CIVIL
FLA. PE # 70592
C.A.N. 3538

JUN 29 2012

Approved as complying with the Florida Building Code
Date 10/25/12
NOAs 12-0206.02
Miami-Dade Product Control
By Ishaq I. Chanda

DWG. NO.: W12-22

CGI WINDOWS & DOORS
10100 northwest 25 street miami, florida 33172

product : Series 450 Outswing Doors & Sidelites

date : 05-22-12 | sheet 6 of 7

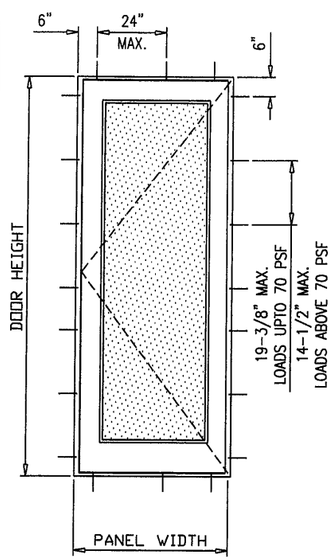

SINGLE DOOR OR SIDELITE

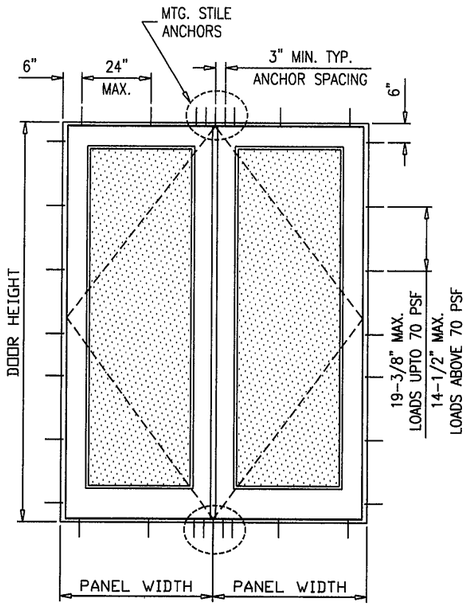

DOUBLE DOOR

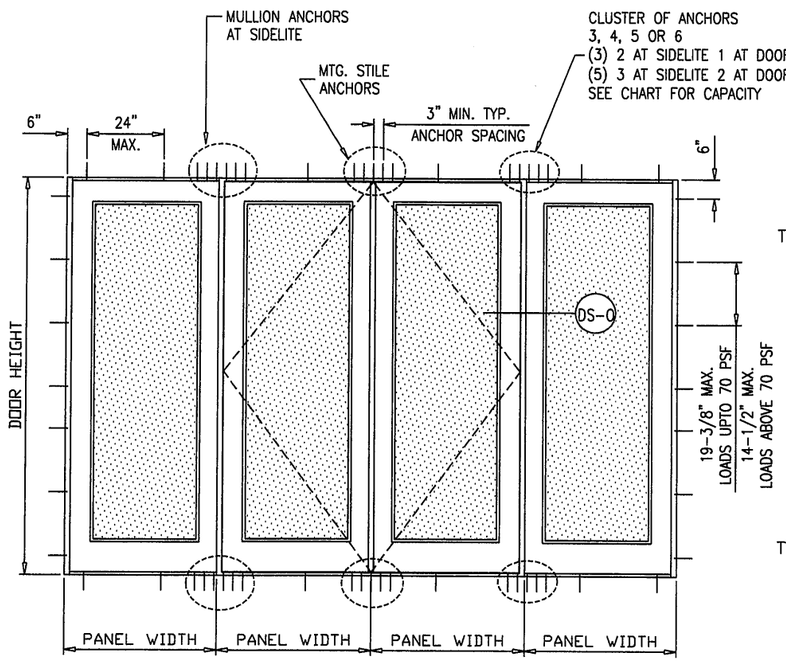

MULLION ANCHORS AT SIDELITES						
NOMINAL DIMS.		DESIGN LOAD CAPACTY-PSF				
		TYPE 'B'			TYPE 'C'	
PANEL WIDTH	PANEL HEIGHT	CLUSTER OF 3 ANCHORS	CLUSTER OF 4 ANCHORS	CLUSTER OF 6 ANCHORS	CLUSTER OF 3 ANCHORS	CLUSTER OF 4 ANCHORS
2/0	6/8	100.3	110.0	110.0	110.0	110.0
2/6		81.1	110.0	110.0	110.0	110.0
3/0		68.0	90.7	110.0	110.0	110.0
3/6		58.6	78.1	110.0	101.3	110.0
2/0	7/0	95.6	110.0	110.0	110.0	110.0
2/6		77.2	103.0	110.0	110.0	110.0
3/0		64.8	86.4	110.0	110.0	110.0
3/6		55.8	74.4	110.0	96.5	110.0
2/0	7/6	89.3	110.0	110.0	110.0	110.0
2/6		72.1	96.2	110.0	110.0	110.0
3/0		60.5	80.7	110.0	104.6	110.0
3/6		52.1	69.5	104.3	90.1	110.0
2/0	8/0	83.7	111.6	110.0	110.0	110.0
2/6		67.7	90.2	110.0	110.0	110.0
3/0		56.8	75.7	110.0	98.1	110.0
3/6		48.9	65.2	97.8	84.5	107.8
2/0	8/6	78.8	105.1	110.0	110.0	110.0
2/6		63.7	84.9	110.0	110.0	110.0
3/0		53.5	71.3	106.9	92.4	110.0
3/6		46.0	61.4	92.1	79.6	101.5
2/0	9/0	74.5	99.3	110.0	110.0	110.0
2/6		60.2	80.3	110.0	104.0	110.0
3/0		50.5	67.3	110.0	87.3	110.0
2/0	9/6	70.6	94.1	110.0	110.0	110.0
2/6		57.0	76.1	110.0	98.6	110.0
3/0		47.9	63.8	95.7	82.7	105.6
2/0	10/0	67.1	89.4	110.0	110.0	110.0
2/6		54.2	72.3	108.4	93.7	110.0
3/0		45.5	60.6	91.0	78.6	100.3

MTG. STILE ANCHORS AT DOUBLE DOORS						
NOMINAL DIMS.		DESIGN LOAD CAPACTY-PSF				
		TYPE 'B' & TYPE 'C' AT SS1 SILL			TYPE 'C' AT S-O & SS2 SILL	
PANEL WIDTH	PANEL HEIGHT	CLUSTER OF 3 ANCHORS	CLUSTER OF 4 ANCHORS	CLUSTER OF 5 ANCHORS	CLUSTER OF 3 ANCHORS	CLUSTER OF 4 ANCHORS
2/0	6/8	105.7	110.0	110.0	110.0	110.0
2/6		84.5	110.0	110.0	110.0	110.0
3/0		70.4	93.9	110.0	110.0	110.0
3/6		60.4	80.5	110.0	110.0	110.0
2/0	7/0	100.7	110.0	110.0	110.0	110.0
2/6		80.5	107.4	110.0	110.0	110.0
3/0		67.1	89.5	110.0	110.0	110.0
3/6		57.5	76.7	110.0	108.0	110.0
2/0	7/6	94.0	110.0	110.0	110.0	110.0
2/6		75.2	100.3	110.0	110.0	110.0
3/0		62.7	83.6	110.0	110.0	110.0
3/6		53.7	71.6	107.4	100.9	110.0
2/0	8/0	88.2	110.0	110.0	110.0	110.0
2/6		70.5	94.1	110.0	110.0	110.0
3/0		58.8	78.4	110.0	110.0	110.0
3/6		50.4	67.2	100.8	94.6	110.0
2/0	8/6	83.0	110.0	110.0	110.0	110.0
2/6		66.4	88.6	110.0	110.0	110.0
3/0		55.4	73.8	110.0	103.9	110.0
3/6		47.4	63.3	94.9	89.1	110.0
2/0	9/0	78.5	104.6	110.0	110.0	110.0
2/6		62.8	83.7	110.0	110.0	110.0
3/0		52.3	69.7	104.6	98.2	110.0
2/0	9/6	74.4	99.1	110.0	110.0	110.0
2/6		59.5	79.3	110.0	110.0	110.0
3/0		49.6	66.1	99.1	93.1	110.0
2/0	10/0	70.7	94.2	110.0	110.0	110.0
2/6		56.5	75.4	110.0	106.1	110.0
3/0		47.1	62.8	94.2	88.4	110.0

ANCHORS:

TYPE 'B'– 1/4" DIA. ULTRACON BY 'ELCO' (Fu=177 KSI, Fy=155 KSI)

INTO 2BY WOOD BUCKS OR WOOD STRUCTURES
1–1/2" MIN. PENETRATION INTO WOOD

THRU 1BY WOOD BUCKS INTO CONCRETE
1–1/4" MIN. EMBED INTO CONC. OR MASONRY

DIRECTLY INTO CONCRETE
1–1/4" MIN. EMBED INTO CONC. OR MASONRY

– AT HEAD

EDGE DISTANCES

INTO CONCRETE AND MASONRY = 2" MIN.
INTO WOOD STRUCTURE = 1" MIN.

TYPE 'C'– 1/4" DIA. ULTRACON BY 'ELCO' (Fu=177 KSI, Fy=155 KSI)

DIRECTLY INTO CONCRETE
1–3/4" MIN. EMBED INTO CONC.

– AT HEAD OR SILL

EDGE DISTANCES

INTO CONCRETE = 2–1/2" MIN.

CONCRETE f'c = 3000 PSI MIN.
C–90 HOLLOW/FILLED BLOCK f'm = 2000 PSI MIN.

TYPICAL ANCHORS SPACED AS SHOWN IN DETAILS AND CHARTS.
ANCHORS TO BE AT 6" FROM CORNERS
MAX. SPACING 24" O.C. AT HEAD & SILL.

STEPS TO USE CHARTS:

1. SELECT TYPE OF ANCHOR.
2. FOR SIZE OF UNITS DETERMINE ALLOWABLE LOAD CAPACITY. THIS LOAD CAPACITY MUST MEET OR EXCEED DESIGN WIND LOAD REQUIREMENT DETERMINE IN STEP 1 OF SHEET 6.

Approved as complying with the Florida Building Code
Date 10/25/12
NOAS 12-0704.02
Miami-Dade Product Control
By Ishaq I. Chaudhry

Engr: JAVAD AHMAD
CIVIL
FLA. PE # 70592
C.A.N. 3538

JUN 29 2012

DWG. NO.: W12–22

CGI
WINDOWS & DOORS
10100 northwest 25 street miami, florida 33172

product : Series 450 Outswing Doors & Sidelites

date : 05–22–12 | sheet 7 of 7

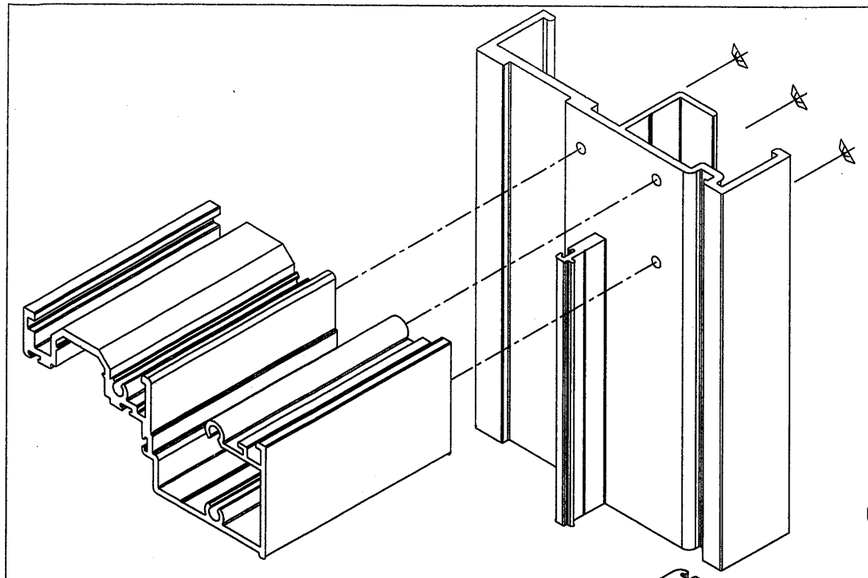

HEAD CORNER DETAIL

CORNERS TO BE SEALED WITH
LOW MODULUS SILICONE SILPRUF.

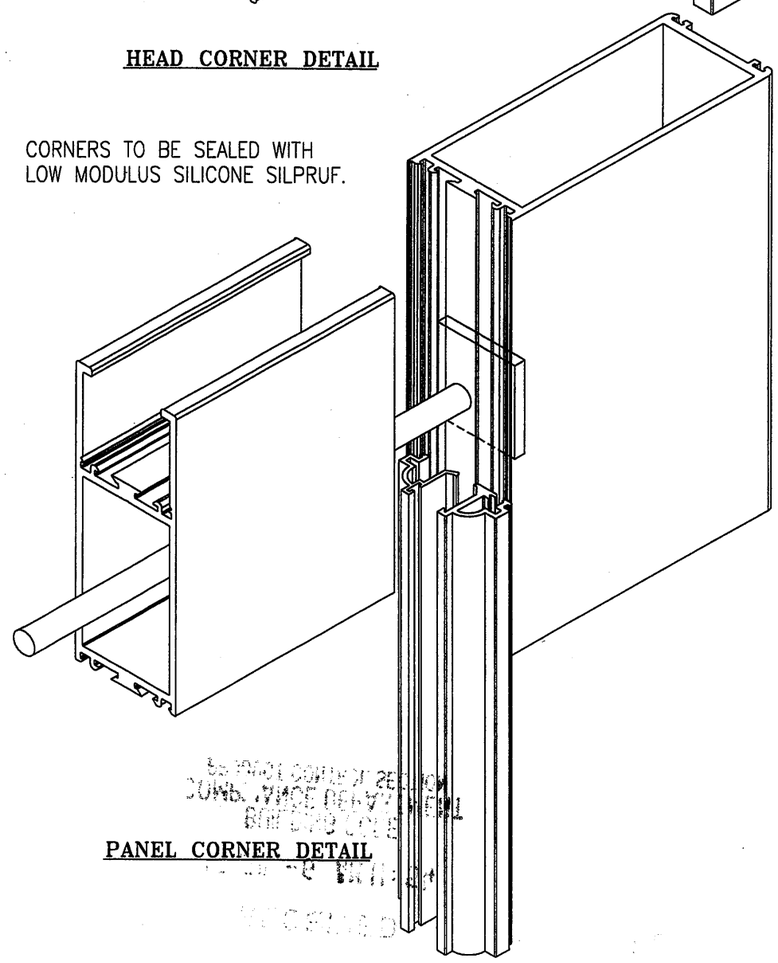

PANEL CORNER DETAIL

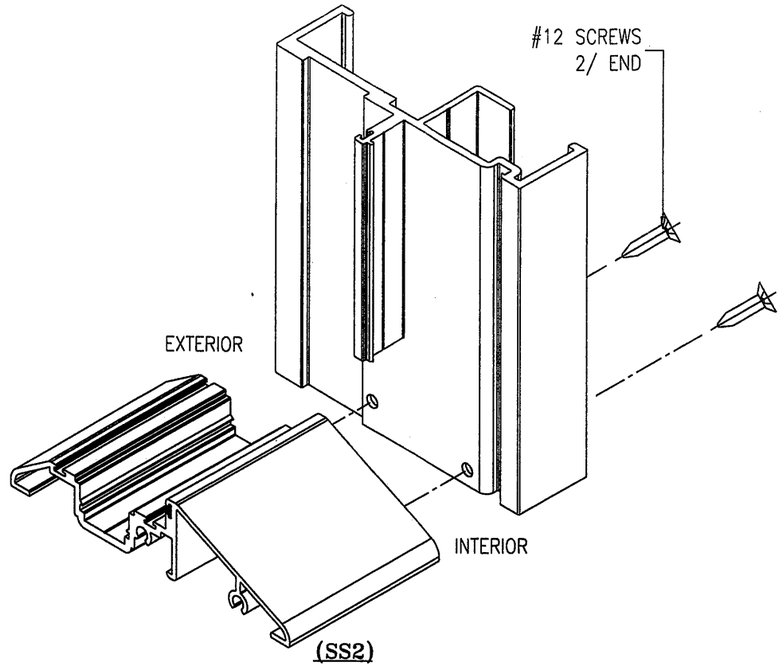

(SS2)
RESIDENTIAL SADDLE SILL CORNER CONSTRUCTION

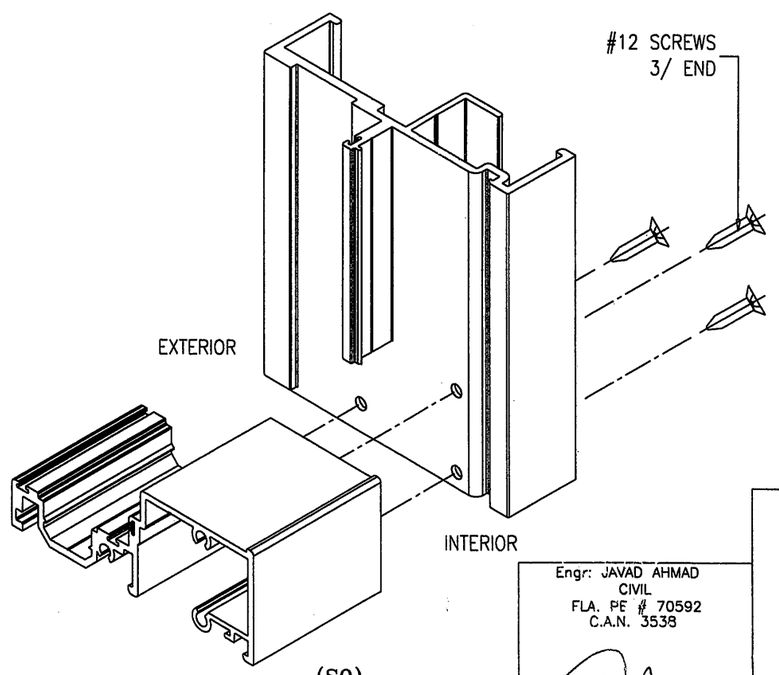

(SO)
STD. SILL CORNER DETAIL

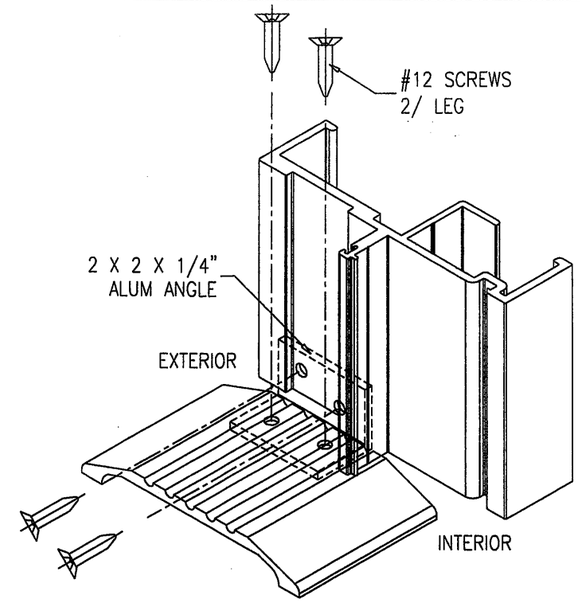

(SS1)
ADA SILL CORNER DETAIL

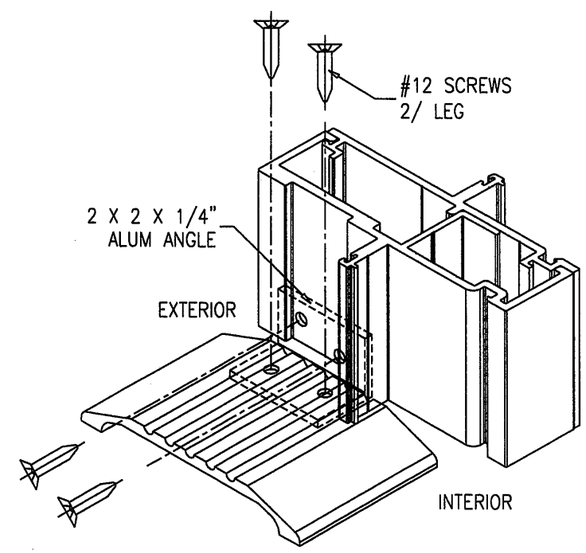

ADA SILL @ MULLION

DWG. NO.: W12-22

Engr: JAVAD AHMAD
CIVIL
FLA. PE # 70592
C.A.N. 3538

JUN 29 2012

Approved as complying with the Florida Building Code
Date: OCT 25, 2012
NOA#: 12-0706.02
Miami-Dade Product Control
By: Ishaq I. Chand

CGI
WINDOWS & DOORS
10100 northwest 25 street miami, florida 33172

product : Series 450 Outswing Doors & Sidelites	
date : 05-22-12	sheet 7.1 of 7