MIAMI-DADE COUNTY
PRODUCT CONTROL SECTION
11805 SW 26 Street, Room 208
Miami, Florida 33175-2474
T (786) 315-2590 F (786) 315-2599
www.miamidade.gov/economy

DEPARTMENT OF REGULATORY AND ECONOMIC RESOURCES (RER)
BOARD AND CODE ADMINISTRATION DIVISION

NOTICE OF ACCEPTANCE (NOA)

CGI Windows & Doors, Inc.
10100 N. W. 25th Street
Miami, Fl. 33172

SCOPE:

This NOA is being issued under the applicable rules and regulations governing the use of construction materials. The documentation submitted has been reviewed and accepted by Miami-Dade County RER -Product Control Section to be used in Miami Dade County and other areas where allowed by the Authority Having Jurisdiction (AHJ).

This NOA shall not be valid after the expiration date stated below. The Miami-Dade County Product Control Section (In Miami Dade County) and/or the AHJ (in areas other than Miami Dade County) reserve the right to have this product or material tested for quality assurance purposes. If this product or material fails to perform in the accepted manner, the manufacturer will incur the expense of such testing and the AHJ may immediately revoke, modify, or suspend the use of such product or material within their jurisdiction. RER reserves the right to revoke this acceptance, if it is determined by Miami-Dade County Product Control Section that this product or material fails to meet the requirements of the applicable building code.

This product is approved as described herein, and has been designed to comply with the Florida Building Code, including the High Velocity Hurricane Zone.

DESCRIPTION: Series "450" Aluminum Inswing glazed Doors w/wo Sidelites - Impact

APPROVAL DOCUMENT: Drawing No.**W06-73**, titled "Series 450 Inswing Doors & Sidelites", sheets 1, 1.1, 1.2, 2, 2.1, 2.2, 3, 4, 5, 6, 7 and 7.1 of 7, prepared by manufacturer, dated 10-27-06 and last revised on JUN 29, 2012, signed and sealed by Javad Ahmad, P.E., bearing the Miami-Dade County Product Control Revision stamp with the Notice of Acceptance number and expiration date by the Miami-Dade County Product Control Section.

MISSILE IMPACT RATING: Large and Small Missile Impact

Limitations:

1. See Design Pressure ratings in sheets 1.1, 5, 6 and 7 for unit sizes Vs lock options, mullion type, sidelites, glass types and anchors.
2. For mulled units lower design pressure of doors or mullion shall control for entire assembly.
3. Exterior Design Pressure= +50.0 PSF w/ threshold (sill type S-I). Sills (threshold) types SS-1 & SS-2 are not rated for water infiltration. See thresholds (sills) and glass type A1(muntin) limitations notes, in sheet 6.
4. Narrow stile sidelites are limited to 18" or less.

LABELING: Each unit shall bear a permanent label with the manufacturer's name or logo, city, state and series and following statement: "Miami-Dade County Product Control Approved", noted herein.

RENEWAL of this NOA shall be considered after a renewal application has been filed and there has been no change in the applicable building code negatively affecting the performance of this product.

TERMINATION of this NOA will occur after the expiration date or if there has been a revision or change in the materials, use, and/or manufacture of the product or process. Misuse of this NOA as an endorsement of any product, for sales, advertising or any other purposes shall automatically terminate this NOA. Failure to comply with any section of this NOA shall be cause for termination and removal of NOA.

ADVERTISEMENT: The NOA number preceded by the words Miami-Dade County, Florida, and followed by the expiration date may be displayed in advertising literature. If any portion of the NOA is displayed, then it shall be done in its entirety.

INSPECTION: A copy of this entire NOA shall be provided to the user by the manufacturer or its distributors and shall be available for inspection at the job site at the request of the Building Official.

This NOA **revises # 11-1025.03** consists of this page 1 and evidence pages E-1& E-2, as well as approval document mentioned above.

The submitted documentation was reviewed by **Ishaq I. Chanda, P.E.**

MIAMI-DADE COUNTY APPROVED

10/16/12

NOTICE OF ACCEPTANCE: EVIDENCE SUBMITTED

A. DRAWINGS

1. Manufacturer's die drawings and sections (Submitted under file # **11-1025.03**).
2. Drawing No.**W06-73**, titled "Series 450 Inswing Doors & Sidelites", sheets 1, 1.1, 1.2, 2, 2.1, 2.2, 3, 4, 5, 6, 7 and 7.1 of 7, prepared by manufacturer, dated 10-27-06 and last revised on JUN 29, 2012, signed and sealed by Javad Ahmad, P.E.

B. TESTS (Submitted under file # **11-1025.03**)

1. Test reports on: 1) Air Infiltration Test, per FBC, TAS 202-94
   2) Uniform Static Air Pressure Test, Loading per FBC TAS 202-94
   3) Water Resistance Test, per FBC, TAS 202-94(+50.0 PSF, sill S-I only)
   4) Large Missile Impact Test per FBC, TAS 201-94
   5) Cyclic Wind Pressure Loading per FBC, TAS 203-94
   6) Forced Entry Test, per FBC 2411 3.2.1, TAS 202-94

Along with manufacturer's parts and section drawing marked-up drawings of aluminum In swing / Outswing door w/wo sidelites, by Hurricane Testing Laboratory, Inc., Test Report No. **HTL-0080-0304-11** dated 11/28/2011 and **HTL-0080-0902-11**, signed and sealed by Vinu J. Abraham, P.E.

Note: This test report has been revised by addendum letters, issued by Architectural Testing (Former Hurricane Testing Lab), dated 01/20/12 and 04/03/12, both signed and sealed by Vinu J. Abraham, P.E.

Along with manufacturer's parts and section drawing marked-up drawings of double aluminum outswing doors, issued by Architectural Testing, Test Report No(s) **B-5234.02-450-18** dated 12/19/2011, signed and sealed by Vinu J. Abraham, P.E.

2. Test reports on: 1) Air Infiltration Test, per FBC, TAS 202-94
   2) Uniform Static Air Pressure Test, Loading per FBC TAS 202-94
   3) Water Resistance Test, per FBC, TAS 202-94
   4) Large Missile Impact Test per FBC, TAS 201-94
   5) Cyclic Wind Pressure Loading per FBC, TAS 203-94
   6) Forced Entry Test, per FBC 2411 3.2.1, TAS 202-94.

Along with manufacturer's parts and section drawing marked-up drawings of aluminum In/out swing door w/sidelites, by Hurricane Testing Laboratory, Inc., Test Report No. **HTL-97055 (0080-912-97)** dated 09/23/97 thru 02/27/98 for specimen #1, 2, 3, 4 tested per PA202-94, specimen #4, 5A, 5B, 5C tested per PA201-94 & PA203-94, signed and sealed by Timothy S. Marshall, P.E.

Along with manufacturer's parts and section drawing marked-up drawings of aluminum out swing door w/sidelites, by Hurricane Testing Laboratory, Inc., Test Report No. **HTL-01071 (0080-0402-02)** dated 04/01/2002 tested per PA201-94 & PA203-94, signed and sealed by Vinu J. Abraham, P.E. (submitted in file # **09-0723.04**). Original tests conducted per SFBC, PA 201, 202 &203-94 now known as FBC, TAS 201, 202 & 203-94.

Ishaq I. Chanda

Ishaq I. Chanda, P.E.
Product Control Examiner
NOA No 12-0706.04
Expiration Date: November 09, 2016
Approval Date: October 25, 2012

NOTICE OF ACCEPTANCE: EVIDENCE SUBMITTED

C. CALCULATIONS

1. Additional intermediate horizontal mull calculations, prepared by Al Farooq Corporation, dated JUN 29, 2012, signed and sealed by Javad Ahmad, P.E.
2. Anchor verification calculations and structural analysis, complying with FBC-2010, prepared by Al Farooq Corporation, dated 09/09/11 and last revised on APR 24, 2012, signed and sealed by Javad Ahmad, P.E. (Submitted under file # **11-1025.03**)
3. Glazing complies w/ ASTME-1300-02 & -04.

D. QUALITY ASSURANCE

1. Miami Dade Department of Permitting, Environment, and Regulatory Affairs (PERA).

E. MATERIAL CERTIFICATIONS

1. 1. Notice of Acceptance No. **11-0624.02** issued to E.I. DuPont DeNemours & Co., Inc. for their "**DuPont Sentry Glass ® Interlayer**", expiring on 01/14/17.
2. Notice of Acceptance No. **08-1224.04** issued to Solutia Inc. for "Saflex composite glass w/ PET interlayer", expiring on 12/11/13.
3. Notice of Acceptance No. **11-0325.05** issued to Solutia Inc. for "Saflex color & clear interlayer", expiring on 05/21/16.

F. STATEMENTS

1. Statement letter of conformance to FBC 2010 and letter of no financial interest, prepared by Al Farooq Corporation, dated 10/16/12, signed and sealed by Javad Ahmad, P.E.
2. Lab compliance and addendum letters, as part of the above referenced test reports.

G. OTHER

1. This NOA **revises # 11-1025.03**, expiring on November 09, 2016.
2. Hardware cut sheets verified and marked-up by the Architectural Testing (former Hurricane Testing lab).
3. Test proposal # **10-0940**, dated 11/17/10 approved by BNC.

Ishaq I. Chanda

Ishaq I. Chanda, P.E.
Product Control Examiner
NOA No 12-0706.04
Expiration Date: November 09, 2016
Approval Date: October 25, 2012

TYPICAL ELEVATIONS

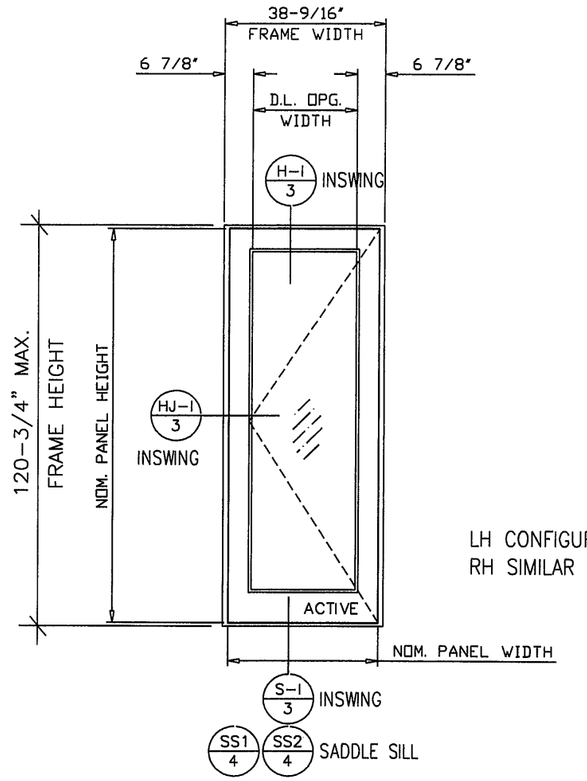

LH CONFIGURATIONS SHOWN
RH SIMILAR

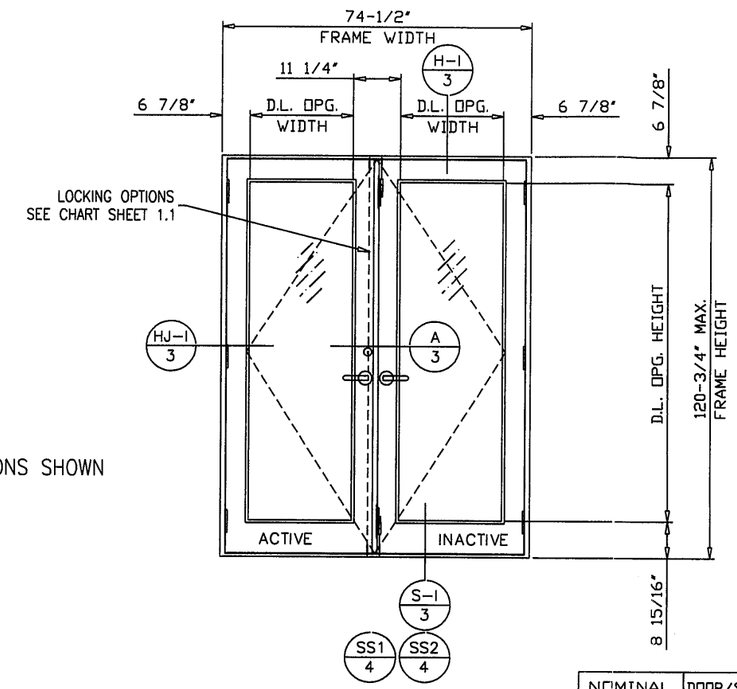

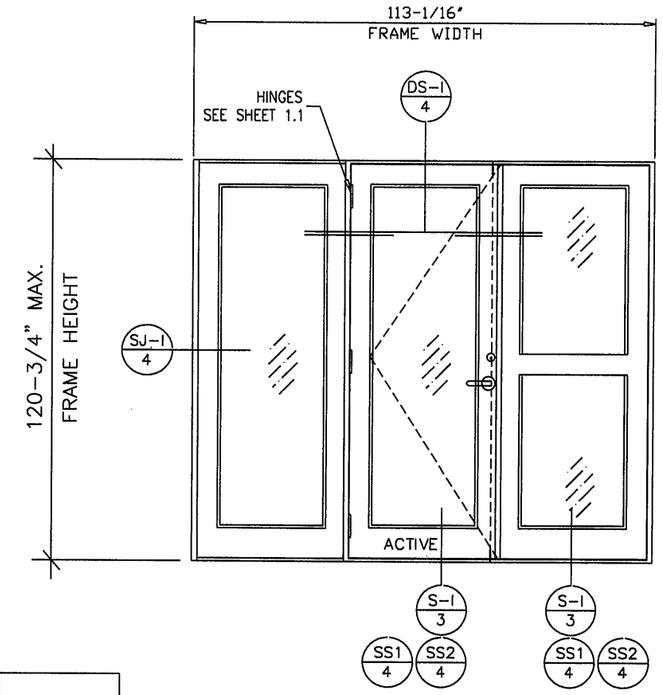

NOMINAL PANEL WIDTH	DOOR/SIDELITE PANEL WIDTH	D.L. OPG. WIDTH
2/0	23-3/4"	12-7/8"
2/6	29-3/4"	18-7/8"
3/0	35-3/4"	24 7/8"
3/6	41-3/4"	30-7/8"

NOMINAL PANEL HEIGHT	DOOR/SIDELITE PANEL HEIGHT	D.L. OPG. HEIGHT
6/8	78-7/8"	66-1/2"
7/0	82-7/8"	70-1/2"
7/6	88-7/8"	76-1/2"
8/0	94-7/8"	82-1/2"
8/6	100-7/8"	88-1/2"
9/0	106-7/8"	94-1/2"
9/6	112-7/8"	100-1/2"
10/0	118-7/8"	106-1/2"

FRAME HEIGHT = PANEL HEIGHT + 1-7/8" (STD. THRESHOLD)
FRAME HEIGHT = PANEL HEIGHT + 1-5/8" (ADA THRESHOLD)
FRAME WIDTH = PANEL WIDTH + 2-3/4"

LEGEND

___ -1 - INSWING DOOR DETAIL

☐ - ITEM DESCRIPTION (see sheet 2 of 7)

STEPS TO USE CHARTS
SEE SHEETS 6 & 7.

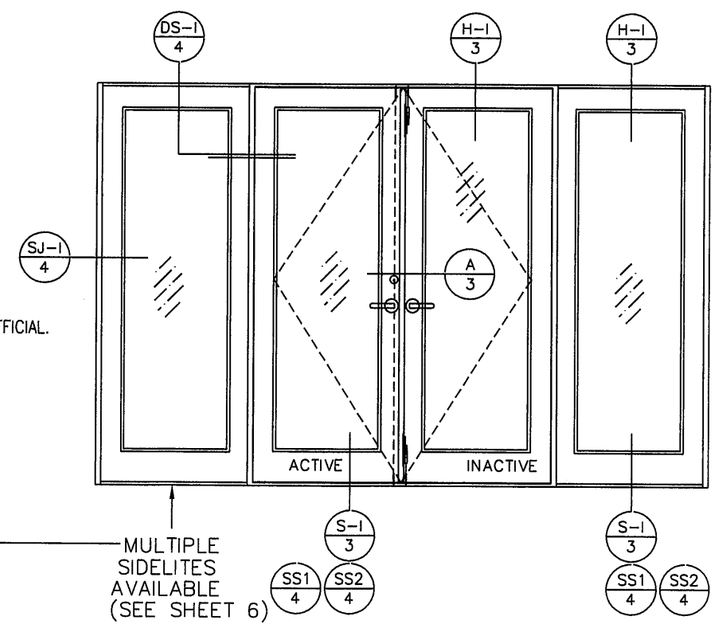

NOTE:
EGRESS REQUIREMENTS TO BE REVIEWED BY BUILDING OFFICIAL.

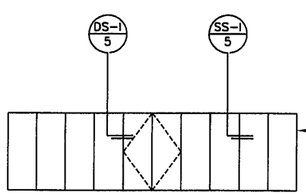

revisions:

B	09.01.11	GENERAL REVISION
C	01.09.12	REV. PER BNC COMMENTS
D	04.23.12	REV. PER PERA COMMENTS
E	06.29.12	NO CHANGE THIS SHEET

DWG. NO.: W06-73

Engr: JAVAD AHMAD
CIVIL
FLA. PE # 70592
C.A.N. 3538

JUN 29 2012

PRODUCT REVISED
in complying with the Florida Building Code
Acceptance No. 12-0706.04
Expiration Date Nov 09, 2016
Signature Date Product Control

JUN 29 2012

CGI WINDOWS & DOORS
10100 northwest 25 street miami, florida 33172

product : Series 450 INSWING Doors & Sidelites

date : 10-27-06 | sheet 1 of 7

TYPICAL ELEVATIONS

	10A		10AA		10B		10C & 10CC		10 F	
DOOR HEIGHT	EXT.(+)	INT.(−)	EXT.(+)	INT.(−)	EXT.(+)	INT.(−)	EXT.(+)	INT.(−)	EXT.(+)	INT.(−)
84"	90.0	90.0	100.0	110.0	100.0	110.0	65.0	65.0	100.0	110.0
96-3/4"	90.0	90.0	100.0	110.0	100.0	110.0	65.0	65.0	90.0	90.0
108-3/4"	–	–	100.0	110.0	100.0	110.0	–	–	90.0	90.0
120-3/4"	–	–	70.0	70.0	70.0	70.0	–	–	70.0	70.0

10A : COPPER CREEK W/ CGI 3 POINT
10AA : BALDWIN W/ CGI 3 POINT
10B : REGENT COMMERCIAL 3 POINT
10C : BALDWIN SINGLE POINT LOCK
10CC : COPPER CREEK SINGLE POINT LOCK
10F : SURFACE MOUNTED LOCK

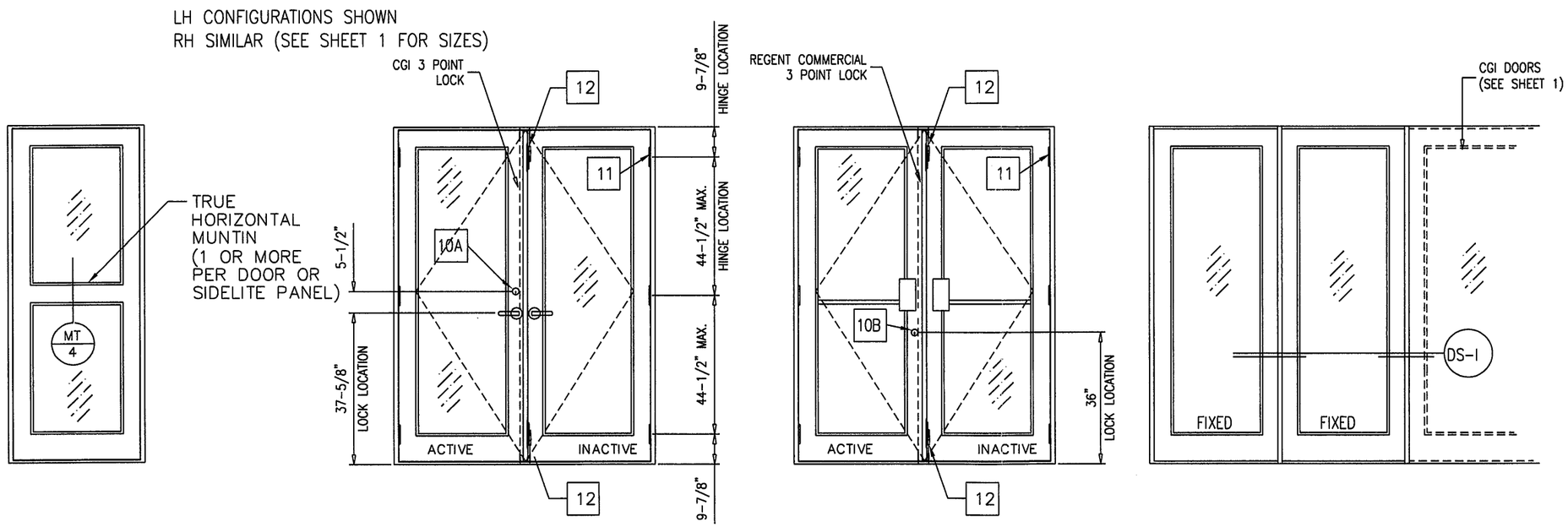

RESIDENTIAL HARDWARE

COMMERCIAL HARDWARE

LEGEND

___ -I - INSWING DOOR DETAIL

☐ - ITEM DESCRIPTION (see sheet 2 of 7)

OPTIONAL TRUE MUNTINS

DOOR OR SIDELITE

HINGE LOCATIONS		
MAX. DOOR HEIGHT	NO. REQD.	MAX. SPACING
UPTO 90-3/4"	3	35 1/2"
ABOVE 90-3/4" UPTO 120"	4	44 1/2"

DOORS WITH 3 HINGES LIMITED TO 100 PSF

FRAME HEIGHT = PANEL HEIGHT + 1-7/8" (STD. THRESHOLD)
FRAME HEIGHT = PANEL HEIGHT + 1-5/8" (ADA THRESHOLD)
FRAME WIDTH = PANEL WIDTH + 2-3/4"

HARDWARE DESCRIPTION

revisions:

B	09.01.11	GENERAL REVISION
C	01.09.12	REV. PER BNC COMMENTS
D	04.23.12	REV. PER PERA COMMENTS
E	06.29.12	NO CHANGE THIS SHEET

DWG. NO.: W06-73

Engr: JAVAD AHMAD
CIVIL
FLA. PE # 70592
C.A.N. 3538

JUN 29 2012

PRODUCT REVISED
In accepting with the Florida Building Code
Assignment No. 12-0706.04
Expiration Date 11/9/16
By Ishaq I. Chanda
[redacted]

CGI
WINDOWS & DOORS
10100 northwest 25 street miami, florida 33172

product : Series 450 INSWING Doors & Sidelites

date : 10-27-06 | sheet 1.1 of 7

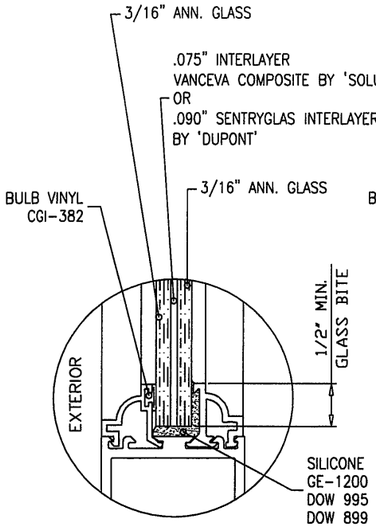

GLASS TYPE 'A'

7/16" OVERALL LAM. GLASS

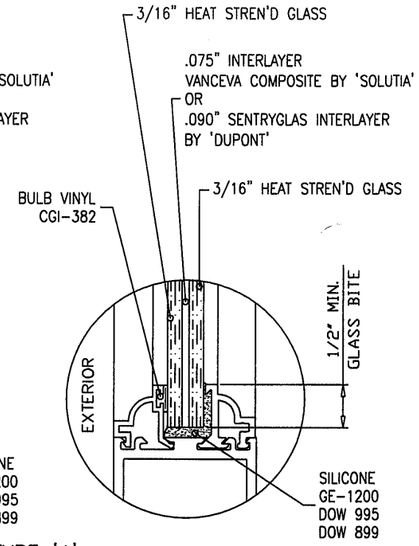

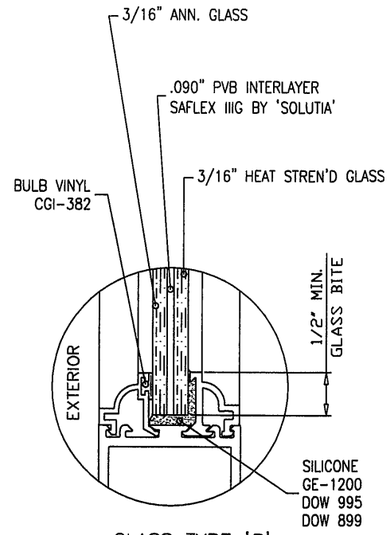

GLASS TYPE 'B'

7/16" OVERALL LAM. GLASS

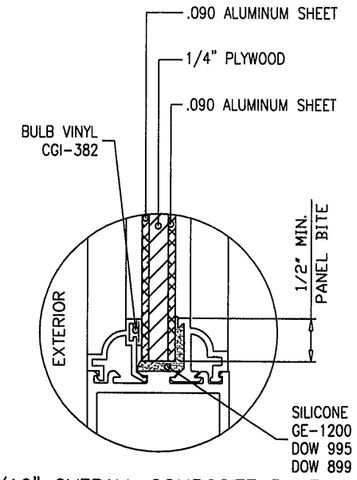

7/16" OVERALL COMPOSITE PANEL

GLAZING STOP OPTIONS

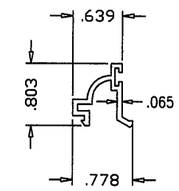

CGI-375

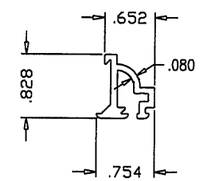

CGI-504

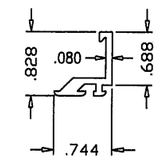

CGI-515

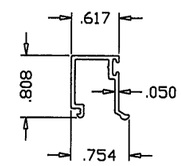

CGI-396

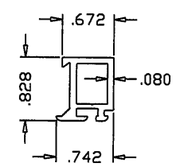

CGI-519

DOORS AND SIDELITES CAN BE GLAZED USING SQUARE OR OGEE GLAZING BEADS/ADAPTERS

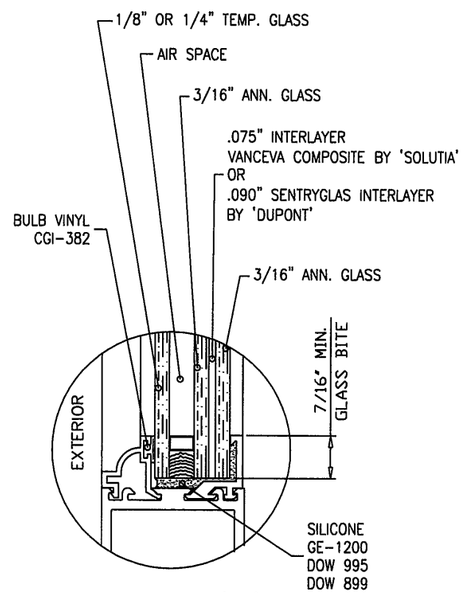

GLASS TYPE 'A1'

1" OVERALL INSUL. LAM. GLASS

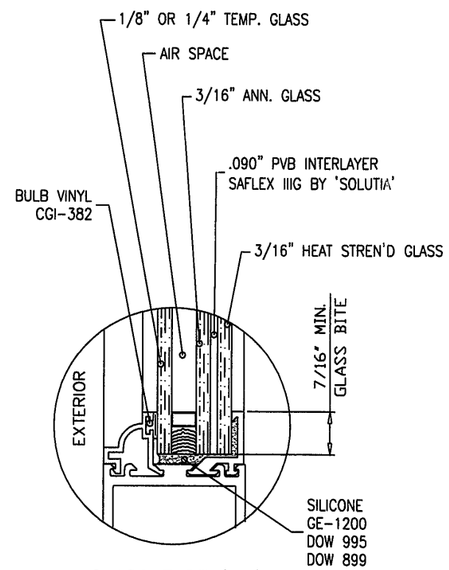

GLASS TYPE 'B1'

1" OVERALL INSUL. LAM. GLASS

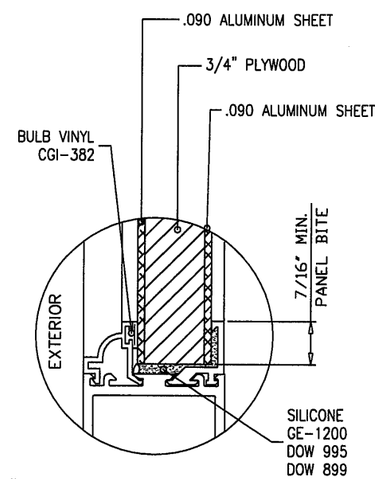

1" OVERALL COMPOSITE PANEL

GLAZING OPTIONS

AIR SPACE CONSISTING OF:
SPACER:
ST. STEEL METAL SPACER AROUND THE PERIMETER OF THE GLASS.

revisions:

B	09.01.11	GENERAL REVISION
C	01.09.12	REV. PER BNC COMMENTS
D	04.23.12	REV. PER PERA COMMENTS
E	06.29.12	NO CHANGE THIS SHEET

DWG. NO.: W06-73

Engr: JAVAD AHMAD
CIVIL
FLA. PE # 70592
C.A.N. 3538

JUN 29 2012

PRODUCT REVISED
in complying with the Florida Building Code
Acceptance No. 12-0706.04
Expiration Date 11/9/16
Miami-Dade Product Control

CGI
WINDOWS & DOORS
10100 northwest 25 street miami, florida 33172

product : Series 450 INSWING Doors & Sidelites

date : 10-27-06 | sheet 1.2 of 7

BILL OF MATERIALS

ITEM	DESCRIPTION
1	#12 X 1 1/4" HEX HEAD S/S SMS (3 PER CORNER CONNECTION)
2A	3/8-16 FULLY THREADED CONTINUOUS ROD
2B	3/8-16 HEX NUT
2C	1 1/2" X 1 1/2" X 3/16"THK. ALUMINUM PLATE
3	SHEAR CLIP (EXT. NO. 506)
4	DOUBLE 9/32" DIA. JAMB INSTLL. HOLES AT 6" FROM ENDS & 24" O.C. MAX.
5	9/32" DIA. HEAD & SILL INSTLL. HOLES AT 6" FROM ENDS, 3 @ CENTER OF PAIRS SPACED 6" O.C. & 24" O.C. MAX.
6	#10 X 1" PH-PH-SS TEKS SCREW, @ 3" & 7" FROM ENDS & 19-3/8" O.C. MAX.
7	#14 X 3/4" HEX HEAD S/S TEKS SCREW AT 6" FROM ENDS & 24 3/16" O.C. MAX.
8	.320 HIGH WOOL PILE WITH CENTER FIN (ULTRAFAB # 3032)
9	.350 HIGH FOAM-TITE WEATHERSEAL (AMESBURY # 32011)
10	ACTIVE PANEL LOCK OPTIONS (SEE SHEET 1.1 FOR LIMITS)
10A	CGI CUSTOM 3 POINT LOCK 4503PL, CONSISTING OF (2) CGI CUSTOM END BOLTS (TOP & BOTTOM), ATTACHED WITH #10 X 3/4" PH SMS, (1) CGI CUSTOM INTERIOR LINKAGE MECHANISM, (1) DEADBOLT BY COPPER CREEEK SERIES E MODEL D82410.
10AA	CGI CUSTOM 3 POINT LOCK 4503PL, CONSISTING OF (2) CGI CUSTOM END BOLTS (TOP & BOTTOM), ATTACHED WITH #10 X 3/4" PH SMS, (1) CGI CUSTOM INTERIOR LINKAGE MECHANISM, (1) DEADBOLT BY BALDWIN SERIES 8200, KWIKSET 780.
10B	REGENT COMMERCIAL 2222 THREE POINT LOCK MECHANISM WITH MORTISE LOCK.
10C	SINGLE POINT LOCK (1) DEADBOLT BY BALDWIN SERIES 8200.
10CC	SINGLE POINT LOCK (1) DEADBOLT BY COPPER CREEK SERIES D82410.
10F	CGI CUSTOM SURFACE MOUNTED SLIDE BOLTS WITH CGI END BOLTS AT ACTIVE LEAF (AT TOP & BOTTOM) WITH BALDWIN SERIES 8200 DEAD BOLT.
11	HAGER 4 1/2" X 4" HINGE IN SOLID BRASS OR STAINLESS STEEL CGI 4-1/2" X 4" HINGE IN ALUMINUM SECURED WITH (8) #12-24 X 1/2" F.H. M.S. (3 PER PANEL UP TO 7'-6 3/4" HIGH) (4 PER PANEL OVER 7'-6 3/4")
12	CGI FLUSHBOLT AT TOP & BOTTOM OF INACTIVE LEAF, HOUSING ATTACHED TO PANEL STILE WITH #10 X 3/4" PH SMS, ACTIVATOR ATTACHED WITH #8 X 1/2" PH SMS.
13	SEE SHEET 1.2 FOR GLAZING OPTIONS
14	SILICONE GE-1200, DOW 995, DOW 899
17	1/2" X 1/2" CONTINUOUS CLOSED CELL FOAM TAPE WITH ONE SIDE ADHESIVE
18	PLASTIC WEEP BAFFLE
19	7/8" X 5" X 1/8" THK. CONTINUOUS ALUMINUM SILL ANGLE ADAPTOR

EXT. = EXTRUSION LIST 500A, 501, 502, 503, 504, 507, 509, 510, 514, 515, 519, 539, & 540 ALL EXTRUSIONS ARE 6063-T6.

375, 396, 505, 508, 511 EXTRUSIONS ARE 6063-T5.

revisions:

B	09.01.11	GENERAL REVISION
C	01.09.12	REV. PER BNC COMMENTS
D	04.23.12	REV. PER PERA COMMENTS
E	06.29.12	NO CHANGE THIS SHEET

DWG. NO.: W06-73

Engr: JAVAD AHMAD
CIVIL
FLA. PE # 70592
C.A.N. 3538

JUN 29 2012

PRODUCT REVISED
In complying with the Florida Building Code
Acceptance No. 12-0706.04
Registration Date 11/9/12
Product Control

CGI
WINDOWS & DOORS
10100 northwest 25 street miami, florida 33172

product : Series 450 INSWING Doors & Sidelites	
date : 10-27-06	sheet 2 of 7

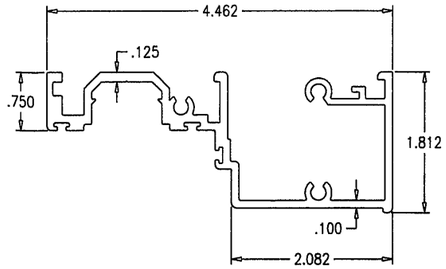

CGI-507
DOOR FRAME HEAD/SILL

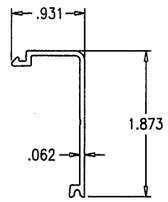

CGI-511
JAMB COVER

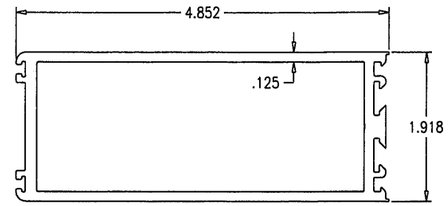

CGI-502
JAMB/LOCK/SIDELITE STILE

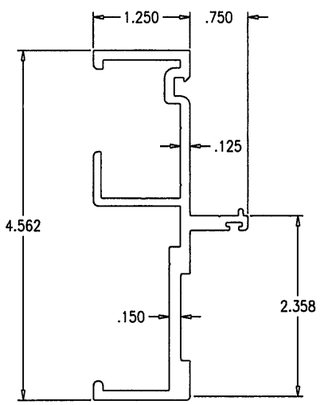

CGI-509
FRAME JAMB/MULLION

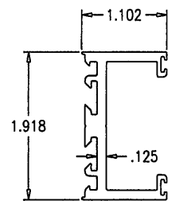

CGI-503
NARROW SIDELITE STILE

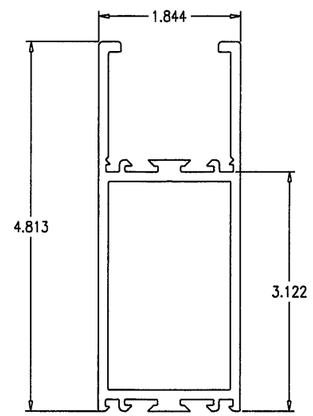

CGI-500A
TOP RAIL

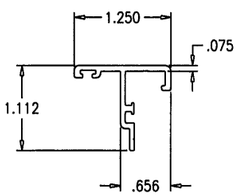

CGI-505
ASTRAGAL

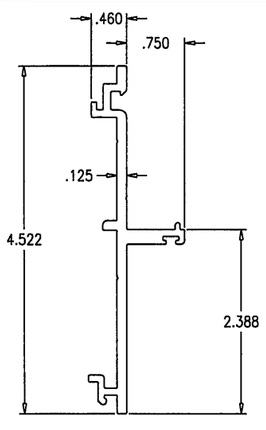

CGI-510
SIDELITE MULLION

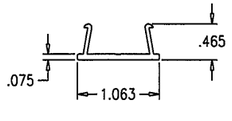

CGI-508
FRAME COVER

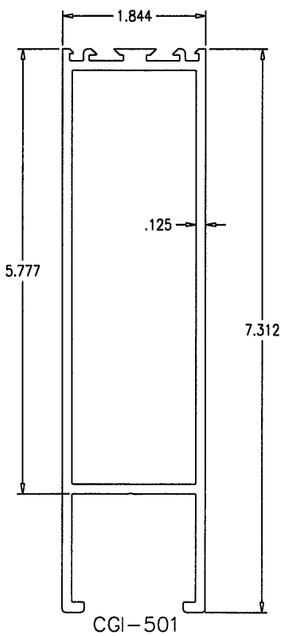

CGI-501
BOTTOM RAIL

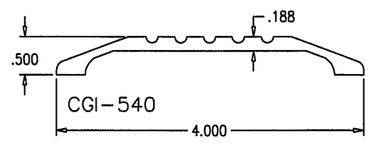

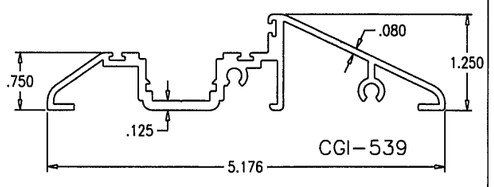

SADDLE THRESHOLDS

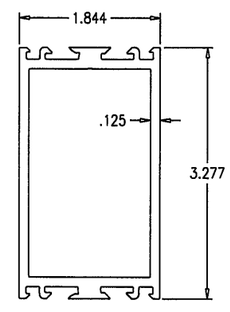

CGI-514
HORIZONTAL MUNTIN

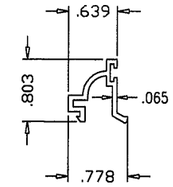

CGI-375

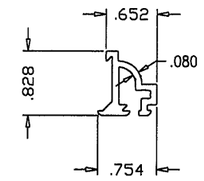

CGI-504

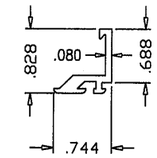

CGI-515

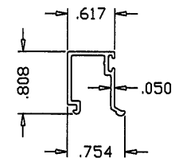

CGI-396

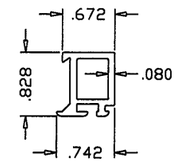

CGI-519

revisions:

D	04.23.12	REV. PER PERA COMMENTS
E	06.29.12	NO CHANGE THIS SHEET

DWG. NO.: W06-73

Engr: JAVAD AHMAD
CIVIL
FLA. PE # 70592
C.A.N. 3538

JUN 29 2012

PRODUCT REVISED
in complying with the Florida
Building Code
Acceptance No. 12-0706.04
Registration Date 11/9/16
[illegible] Product Control

CGI
WINDOWS & DOORS
10100 northwest 25 street miami, florida 33172

product : Series 450 INSWING Doors & Sidelites

date : 10-27-06 | sheet 2.1 of 7

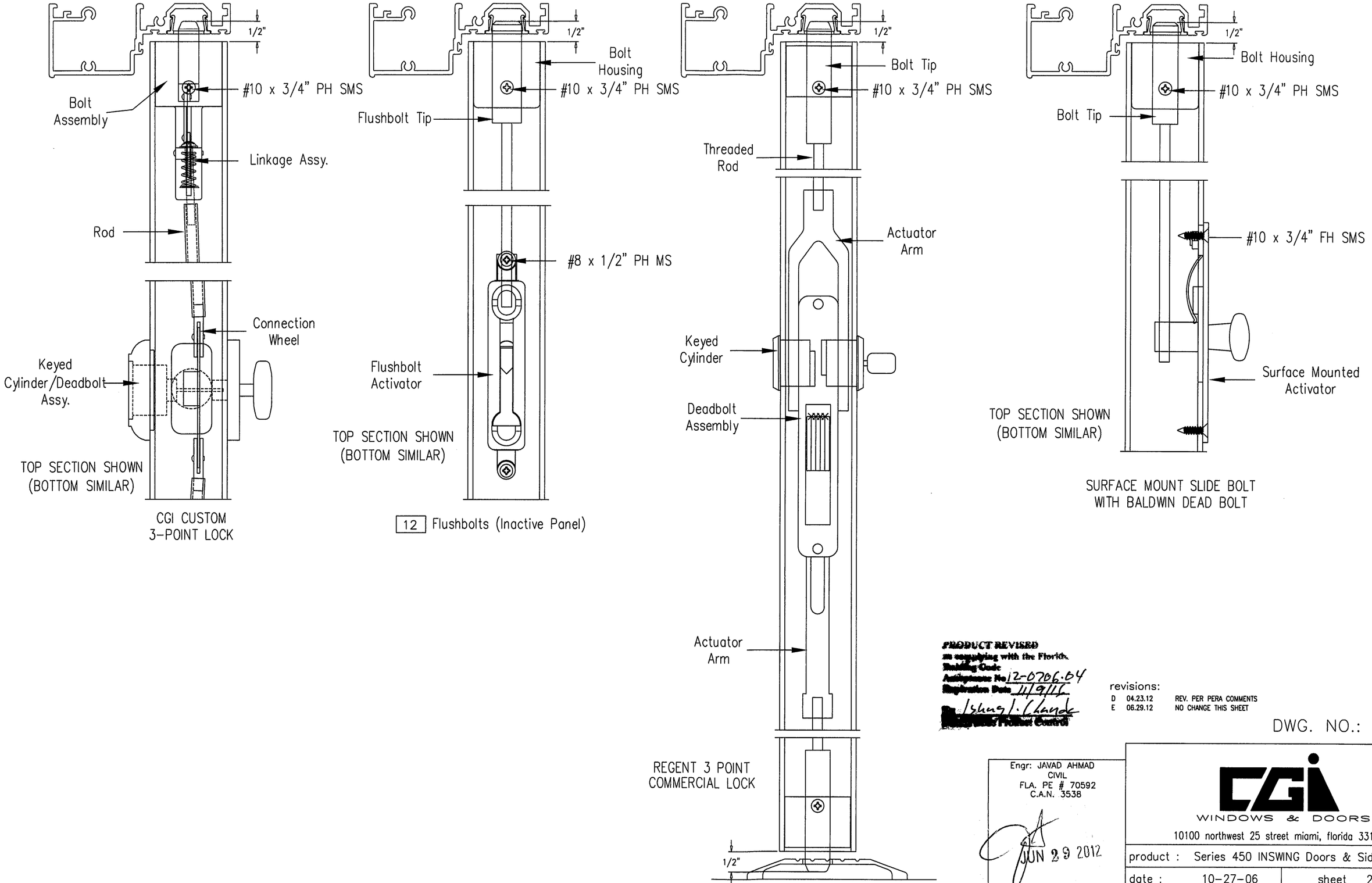

PRODUCT REVISED
as complying with the Florida Building Code
Acceptance No. 12-0706.04
Expiration Date 11/9/16
By Ishwaj I. Chanda
Director, Product Control

revisions:

D	04.23.12	REV. PER PERA COMMENTS
E	06.29.12	NO CHANGE THIS SHEET

DWG. NO.: W06-73

Engr: JAVAD AHMAD
CIVIL
FLA. PE # 70592
C.A.N. 3538

JUN 29 2012

CGI
WINDOWS & DOORS
10100 northwest 25 street miami, florida 33172

product :	Series 450 INSWING Doors & Sidelites
date : 10-27-06	sheet 2.2 of 7

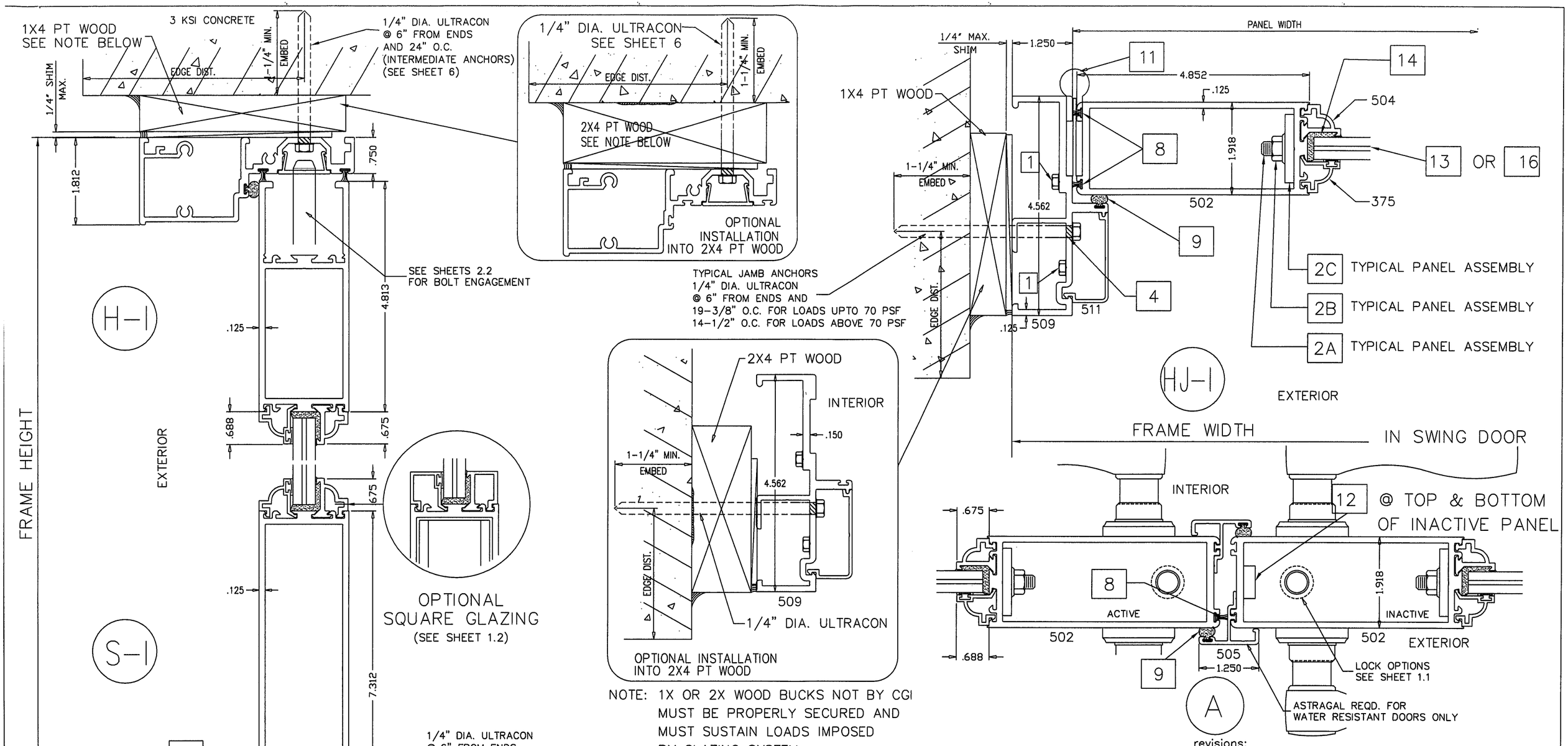

NOTE: 1X OR 2X WOOD BUCKS NOT BY CGI MUST BE PROPERLY SECURED AND MUST SUSTAIN LOADS IMPOSED BY GLAZING SYSTEM.

NOTE:
ALL ANCHOR CONDITIONS SHOWN ON SHEETS 3, 4 AND 5 MAY BE DIRECTLY TO MASONRY WITH 1/4" MAX. SHIM SPACE WITHOUT VARIATION IN CAPACITY.

revisions:

B	09.01.11	GENERAL REVISION
C	01.09.12	REV. PER PERA COMMENTS
D	04.23.12	REV. PER BNC COMMENTS
E	06.29.12	NO CHANGE THIS SHEET

DWG. NO.: W06-73

Engr: JAVAD AHMAD
CIVIL
FLA. PE # 70592
C.A.N. 3538

JUN 29 2012

PRODUCT REVIEWED
as complying with the Florida
Building Code
Acceptance No 12-0706-04
Registration Date 11/9/12
Ishaq I. Chanda
Florida Product Control

CGI
WINDOWS & DOORS
10100 northwest 25 street miami, florida 33172

product :	Series 450 INSWING Doors & Sidelites
date : 10-27-06	sheet 3 of 7

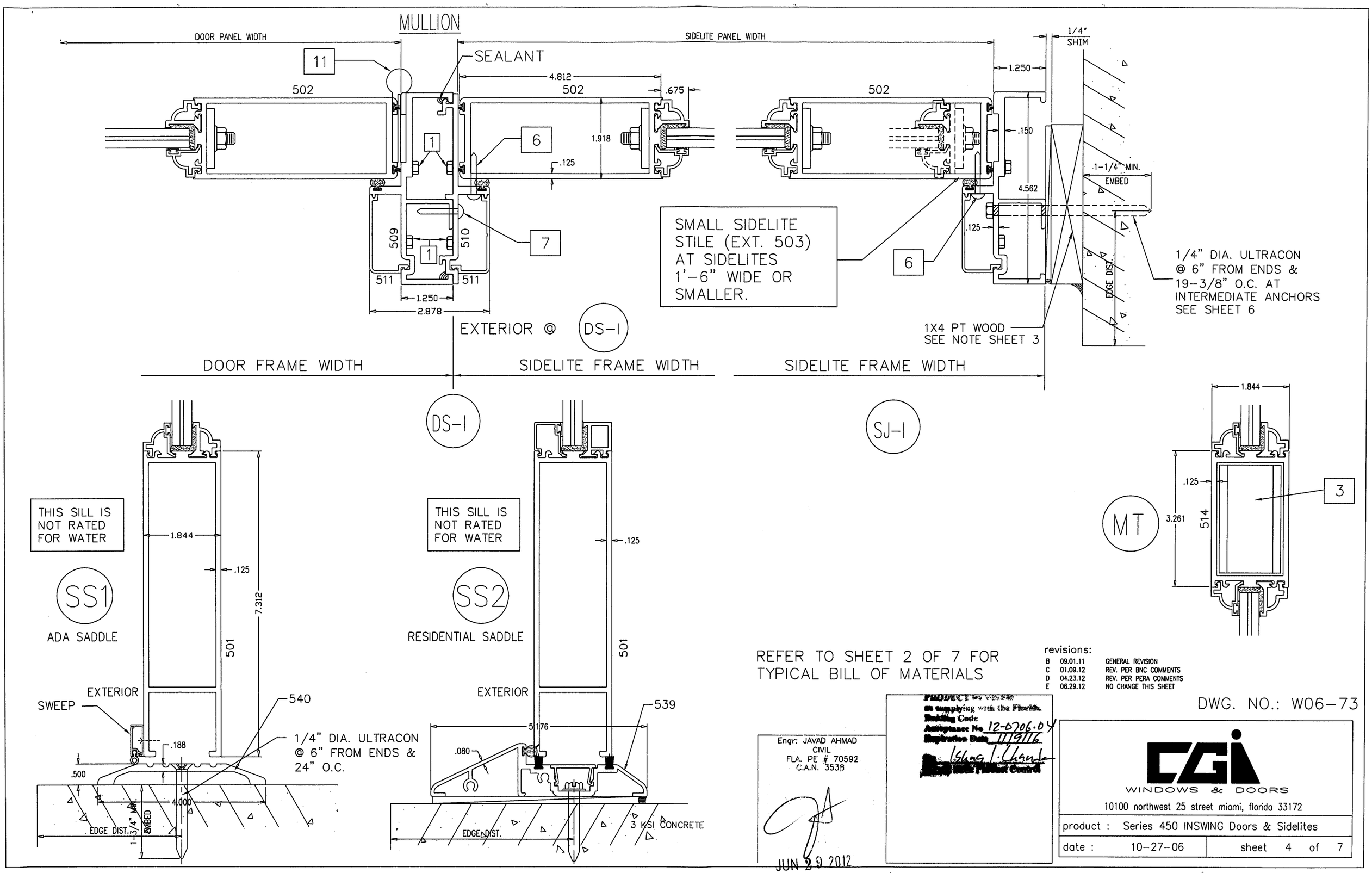

REFER TO SHEET 2 OF 7 FOR TYPICAL BILL OF MATERIALS

revisions:

B	09.01.11	GENERAL REVISION
C	01.09.12	REV. PER BNC COMMENTS
D	04.23.12	REV. PER PERA COMMENTS
E	06.29.12	NO CHANGE THIS SHEET

DWG. NO.: W06-73

Engr: JAVAD AHMAD
CIVIL
FLA. PE # 70592
C.A.N. 3538

JUN 29 2012

PRODUCT IS VISED as complying with the Florida Building Code
Acceptance No 12-0706.04
Expiration Date 11/9/16
Ishaq I. Chanda
Product Control

CGI
WINDOWS & DOORS
10100 northwest 25 street miami, florida 33172

product :	Series 450 INSWING Doors & Sidelites
date : 10-27-06	sheet 4 of 7

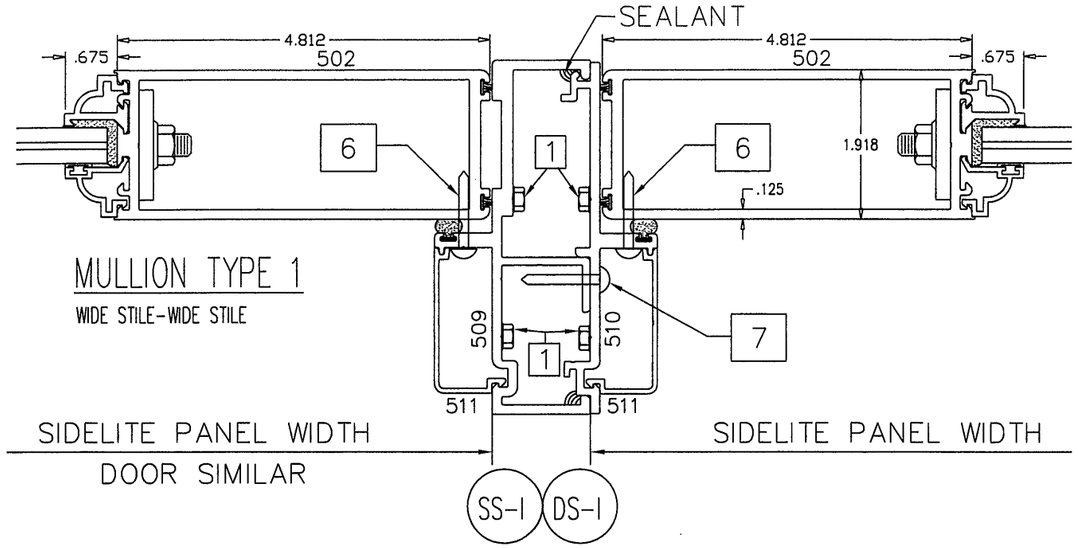

MULLION TYPE 1

WIDE STILE-WIDE STILE

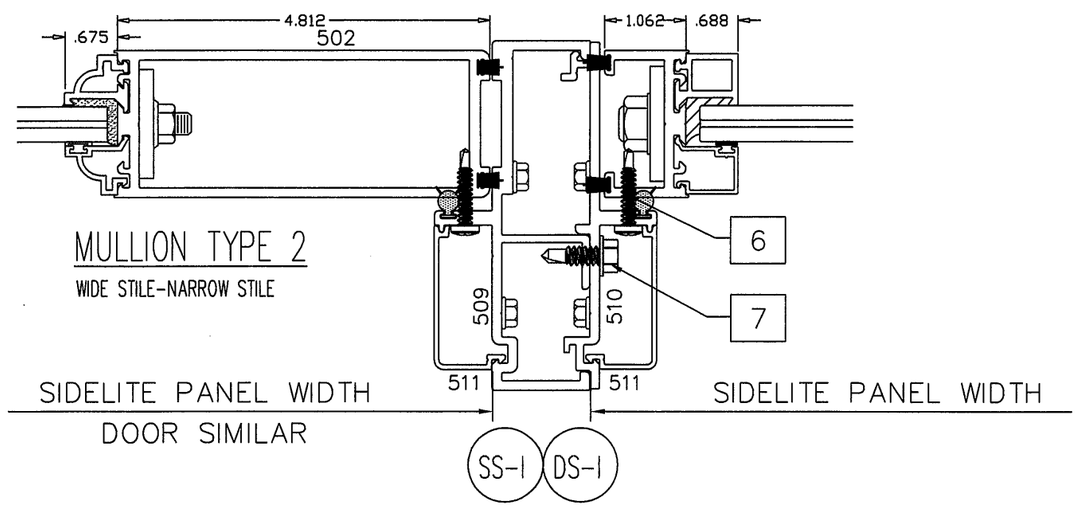

MULLION TYPE 2

WIDE STILE-NARROW STILE

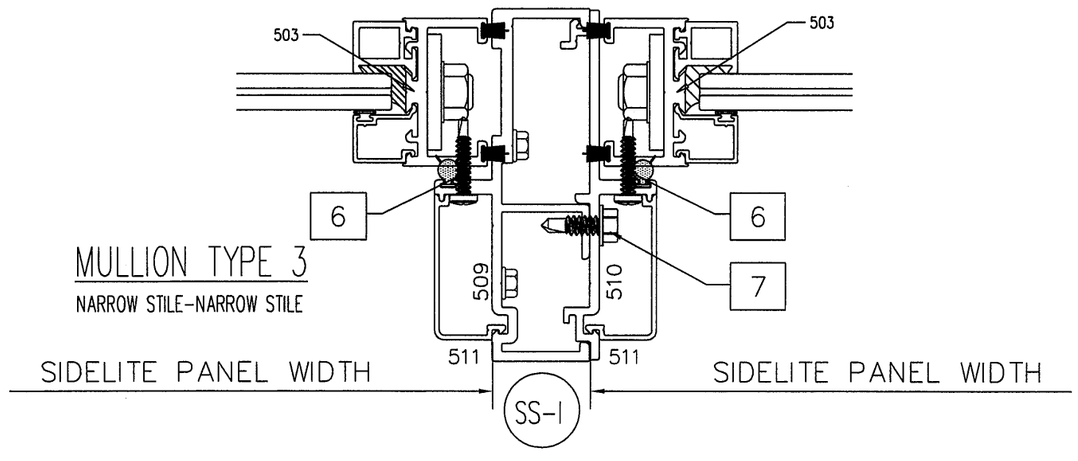

MULLION TYPE 3

NARROW STILE-NARROW STILE

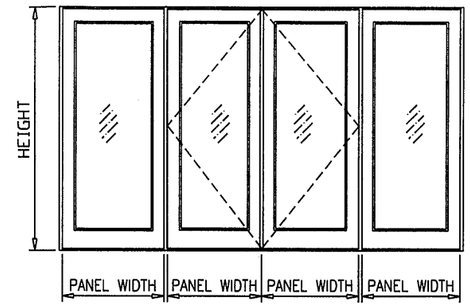

$$\text{WIDTH (W)} = \frac{\text{DOOR PANEL + FIXED PANEL}}{2}$$

MULLION PERFORMANCE CHART
DESIGN LOAD CAPACITY – PSF

NOMINAL DIMS.		MULL TYPE 1		MULL TYPE 2		MULL TYPE 3	
WIDTH (W)	HEIGHT	EXT.(+)	INT.(–)	EXT.(+)	INT.(–)	EXT.(+)	INT.(–)
1/6	6/8	100.0	110.0	100.0	110.0	100.0	110.0
2/0		100.0	110.0	100.0	110.0	100.0	110.0
2/6		100.0	110.0	100.0	110.0	–	–
3/0		100.0	110.0	100.0	110.0	–	–
3/6		100.0	110.0	70.0	70.0	–	–
1/6	7/0	100.0	110.0	100.0	110.0	100.0	110.0
2/0		100.0	110.0	100.0	110.0	100.0	110.0
2/6		100.0	110.0	100.0	110.0	–	–
3/0		100.0	110.0	100.0	110.0	–	–
3/6		100.0	110.0	–	–	–	–
1/6	7/6	100.0	110.0	100.0	110.0	100.0	110.0
2/0		100.0	110.0	100.0	110.0	70.0	70.0
2/6		100.0	110.0	100.0	110.0	–	–
3/0		100.0	110.0	70.0	70.0	–	–
3/6		100.0	110.0	–	–	–	–
1/6	8/0	100.0	110.0	100.0	110.0	100.0	110.0
2/0		100.0	110.0	100.0	110.0	70.0	70.0
2/6		100.0	110.0	100.0	110.0	–	–
3/0		100.0	110.0	–	–	–	–
3/6		100.0	104.6	–	–	–	–
1/6	8/6	100.0	110.0	100.0	110.0	100.0	110.0
2/0		100.0	110.0	100.0	110.0	–	–
2/6		100.0	110.0	100.0	100.4	–	–
3/0		98.9	98.9	–	–	–	–
3/6		70.0	70.0	–	–	–	–
1/6	9/0	100.0	110.0	100.0	110.0	100.0	110.0
2/0		100.0	110.0	100.0	104.1	–	–
2/6		98.1	98.1	70.0	70.0	–	–
3/0		82.9	82.9	–	–	–	–
1/6	9/6	70.0	70.0	70.0	70.0	100.0	110.0
2/0		70.0	70.0	70.0	70.0	–	–
2/6		70.0	70.0	–	–	–	–
3/0		70.0	70.0	–	–	–	–
1/6	10/0	70.0	70.0	70.0	70.0	70.0	70.0
2/0		70.0	70.0	70.0	70.0	–	–
2/6		70.0	70.0	–	–	–	–
3/0		59.9	59.9	–	–	–	–

REFER TO SHEET 2 OF 7 FOR
TYPICAL BILL OF MATERIALS

revisions:

B	09.01.11	GENERAL REVISION
C	01.09.12	REV. PER BNC COMMENTS
D	04.23.12	REV. PER PERA COMMENTS
E	06.29.12	NO CHANGE THIS SHEET

DWG. NO.: W06–73

Engr: JAVAD AHMAD
CIVIL
FLA. PE # 70592
C.A.N. 3538

JUN 29 2012

PRODUCT REVISED
in complying with the Florida
Building Code
Acceptance No. 12-0706.04
Expiration Date 11/9/16
By Shaq L. Chandler
Miami-Dade Product Control

CGI
WINDOWS & DOORS
10100 northwest 25 street miami, florida 33172

product : Series 450 INSWING Doors & Sidelites

date : 10–27–06 | sheet 5 of 7

PANEL PERFORMANCE CHART FOR SINGLE & DOUBLE DOORS & SINGLE SIDELITES

(NARROW STILE SIDELITES LIMITED TO 18" OR LESS)

DESIGN LOAD CAPACITY – PSF

NOMINAL DIMS.		GLASS TYPE 'A' 7/16" COMPOSITE PANELS 1" COMPOSITE PANELS		GLASS TYPE 'A1'		GLASS TYPES 'B' & 'B1'	
NOM. PANEL WIDTH	NOM. PANEL HEIGHT	EXT. (+)	INT. (-)	EXT. (+)	INT. (-)	EXT. (+)	INT. (-)
2/0	6/8	100.0	110.0	70.0	70.0	90.0	90.0
2/6		100.0	110.0	70.0	70.0	90.0	90.0
3/0		100.0	110.0	70.0	70.0	90.0	90.0
3/6		100.0	110.0	70.0	70.0	90.0	90.0
2/0	7/0	100.0	110.0	70.0	70.0	90.0	90.0
2/6		100.0	110.0	70.0	70.0	90.0	90.0
3/0		100.0	110.0	70.0	70.0	90.0	90.0
3/6		100.0	110.0	70.0	70.0	90.0	90.0
2/0	7/6	100.0	110.0	70.0	70.0	90.0	90.0
2/6		100.0	110.0	70.0	70.0	90.0	90.0
3/0		100.0	110.0	70.0	70.0	90.0	90.0
3/6		100.0	110.0	70.0	70.0	90.0	90.0
2/0	8/0	100.0	110.0	70.0	70.0	90.0	90.0
2/6		100.0	110.0	70.0	70.0	90.0	90.0
3/0		100.0	110.0	70.0	70.0	90.0	90.0
3/6		70.0	70.0	70.0 *	70.0 *	-	-
2/0	8/6	100.0	110.0	70.0 *	70.0 *	-	-
2/6		100.0	110.0	70.0 *	70.0 *	-	-
3/0		100.0	110.0	70.0 *	70.0 *	-	-
3/6		70.0	70.0	70.0 *	70.0 *	-	-
2/0	9/0	100.0	110.0	70.0 *	70.0 *	-	-
2/6		100.0	110.0	70.0 *	70.0 *	-	-
3/0		100.0	110.0	70.0 *	70.0 *	-	-
2/0	9/6	70.0	70.0	70.0 *	70.0 *	-	-
2/6		70.0	70.0	70.0 *	70.0 *	-	-
3/0		70.0	70.0	70.0 *	70.0 *	-	-
2/0	10/0	70.0	70.0	70.0 *	70.0 *	-	-
2/6		70.0	70.0	70.0 *	70.0 *	-	-
3/0		70.0	70.0	70.0 *	70.0 *	-	-

LOADS SHOWN ABOVE ARE FOR INSTALLATIONS WHERE WATER INFILTRATION RESISTANCE IS NOT REQUIRED.
LIMIT EXT.(+) LOADS TO 50.0 PSF FOR THRESHOLD (S-I) WHERE WATER INFILTRATION RESISTANCE IS REQUIRED.
THRESHOLD (SS1) & (SS2) ARE NOT RATED FOR WATER INFILTRATION.

* GLASS LIMITED TO 8/0 DAYLITE OPENING. PANEL SIZES ABOVE 8/0 REQUIRE TRUE MUNTIN.

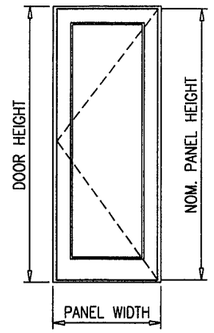

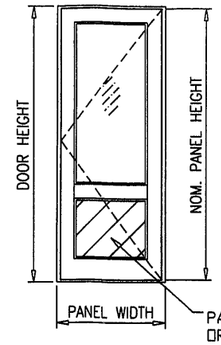

PARTIAL COMPOSITE PANEL
OR GLASS
APPLICABLE TO DOOR/SIDELITE

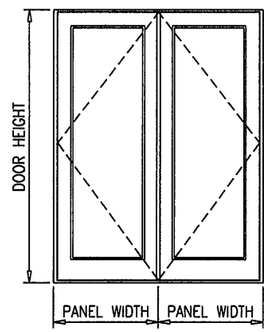

NOTE:
GLASS CAPACITIES ON THIS SHEET ARE
BASED ON ASTM E1300-04 (3 SEC. GUSTS)
AND FLORIDA BUILDING COMMISSION
DECLARATORY STATEMENT DCA05-DEC-219

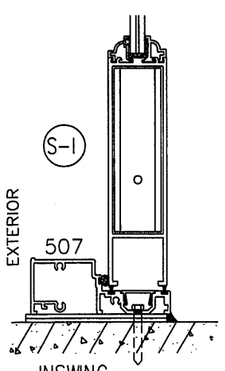

INSWING

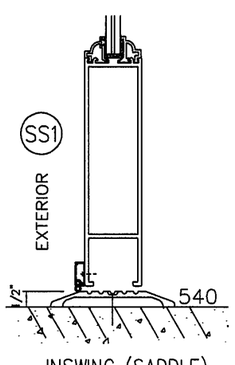

INSWING (SADDLE)

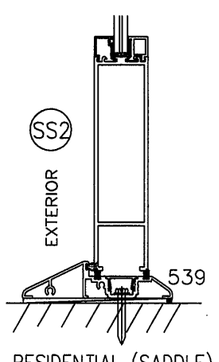

RESIDENTIAL (SADDLE)

THESE CHARTS CAN BE USED TO CHECK CAPACITY FOR SINGLE OR DOUBLE LEAF DOORS AND SIDELITES.

REFER TO TABLES ON SHEET 7 TO DETERMINE ANCHORS REQUIRED.

STEPS TO USE CHARTS:

1. DETERMINE WIND LOAD BASED ON PROVISIONS OF 2010 FLORIDA BLDG. CODE.
2. DETERMINE WATER INFILTRATION REQUIREMENTS BASED ON PROVISIONS OF FBC.
3. SELECT A DOOR SYSTEM I.E. INSWING AND TYPE OF THRESHOLD AND LOCK OPTIONS.
4. CHECK THE ALLOWABLE EXTERIOR AND INTERIOR LOADS FROM APPROPRIATE CHART. THE ALLOWABLE LOADS MUST MEET OR EXCEED THE DESIGN LOADS REQUIREMENTS.
5. SELECT AND CHECK ANCHORS TO MEET LOAD. (SEE SHEET 7)
6. FOR MULLED SIDELITE REFER TO MULLION CAPACITY.
7. LOWER DESIGN PRESSURE FROM LOCK, GLASS, PANEL PERFORMANCE, MULLION AND ANCHOR CAPACITY AT SILL AND THRESHOLD TYPES SHALL CONTROL FOR THE ENTIRE SYSTEM.

PRODUCT REVISED
as complying with the Florida
Building Code
Acceptance No. 12-0706.04
Expiration Date 11/19/16
[redacted]

Engr: JAVAD AHMAD
CIVIL
FLA. PE # 70592
C.A.N. 3538
JUN 29 2012

AL-FAROOQ CORPORATION
ENGINEERS, PLANNERS & PRODUCT DESIGN
1235 SW 87 AVE
MIAMI, FLORIDA 33174
TEL. (305) 264-8100 FAX. (305) 262-6978
COMP-ANL\W06-73CG

SERIES 450 INSWING DOOR AND SIDELITE

CGI WINDOWS & DOORS
10100 N.W. 25TH STREET
MIAMI, FL. 33172
TEL. (305) 593-6590 FAX. (305) 593-6592

revisions:

no	date	by	description
A	07.23.09		UPDATED FOR 2007 FBC
B	09.01.11		GENERAL REVISION
C	01.09.12		REV. PER BNC COMMENTS
D	04.23.12		REV. PER PERA COMMENTS
E	06.29.12		SIDELITE NOTE REV.

date: 10-27-06
scale: 1/2" = 1"
dr. by: HAMID
chk. by:

drawing no.
W06-73

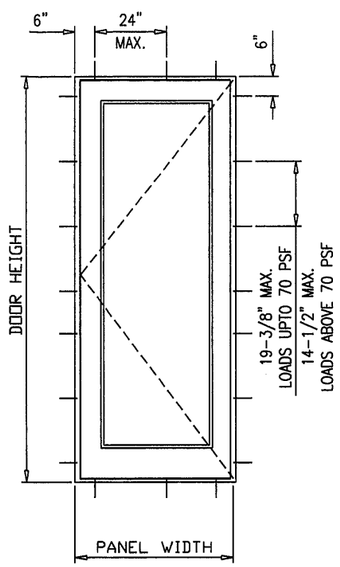

SINGLE DOOR OR SIDELITE

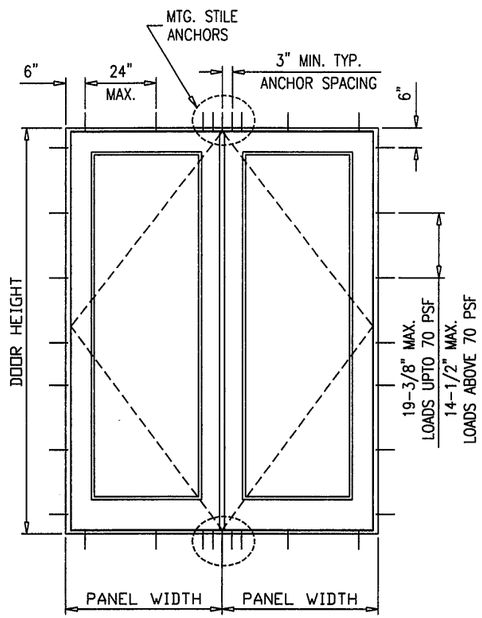

DOUBLE DOOR

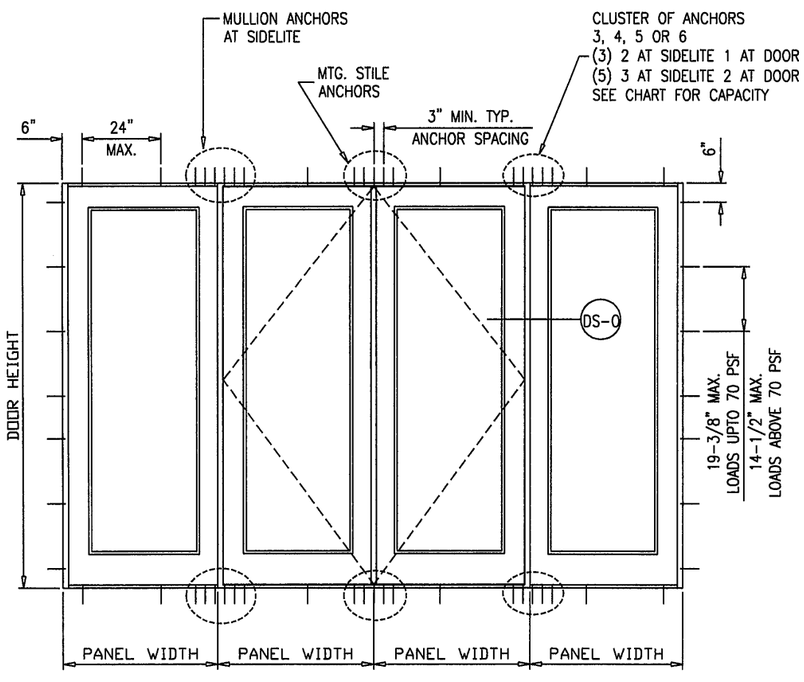

MULLION ANCHORS AT SIDELITES						
NOMINAL DIMS.		DESIGN LOAD CAPACTY-PSF				
		TYPE 'B'			TYPE 'C'	
PANEL WIDTH	PANEL HEIGHT	CLUSTER OF 3 ANCHORS	CLUSTER OF 4 ANCHORS	CLUSTER OF 6 ANCHORS	CLUSTER OF 3 ANCHORS	CLUSTER OF 4 ANCHORS
2/0	6/8	100.3	110.0	110.0	110.0	110.0
2/6		81.1	110.0	110.0	110.0	110.0
3/0		68.0	90.7	110.0	110.0	110.0
3/6		58.6	78.1	110.0	101.3	110.0
2/0	7/0	95.6	110.0	110.0	110.0	110.0
2/6		77.2	103.0	110.0	110.0	110.0
3/0		64.8	86.4	110.0	110.0	110.0
3/6		55.8	74.4	110.0	96.5	110.0
2/0	7/6	89.3	110.0	110.0	110.0	110.0
2/6		72.1	96.2	110.0	110.0	110.0
3/0		60.5	80.7	110.0	104.6	110.0
3/6		52.1	69.5	104.3	90.1	110.0
2/0	8/0	83.7	111.6	110.0	110.0	110.0
2/6		67.7	90.2	110.0	110.0	110.0
3/0		56.8	75.7	110.0	98.1	110.0
3/6		48.9	65.2	97.8	84.5	107.8
2/0	8/6	78.8	105.1	110.0	110.0	110.0
2/6		63.7	84.9	110.0	110.0	110.0
3/0		53.5	71.3	106.9	92.4	110.0
3/6		46.0	61.4	92.1	79.6	101.5
2/0	9/0	74.5	99.3	110.0	110.0	110.0
2/6		60.2	80.3	110.0	104.0	110.0
3/0		50.5	67.3	110.0	87.3	110.0
2/0	9/6	70.6	94.1	110.0	110.0	110.0
2/6		57.0	76.1	110.0	98.6	110.0
3/0		47.9	63.8	95.7	82.7	105.6
2/0	10/0	67.1	89.4	110.0	110.0	110.0
2/6		54.2	72.3	108.4	93.7	110.0
3/0		45.5	60.6	91.0	78.6	100.3

MTG. STILE ANCHORS AT DOUBLE DOORS						
NOMINAL DIMS.		DESIGN LOAD CAPACTY-PSF				
		TYPE 'B' & TYPE 'C' AT SS1 SILL			TYPE 'C' AT S-0 & SS2 SILL	
PANEL WIDTH	PANEL HEIGHT	CLUSTER OF 3 ANCHORS	CLUSTER OF 4 ANCHORS	CLUSTER OF 5 ANCHORS	CLUSTER OF 3 ANCHORS	CLUSTER OF 4 ANCHORS
2/0	6/8	105.7	110.0	110.0	110.0	110.0
2/6		84.5	110.0	110.0	110.0	110.0
3/0		70.4	93.9	110.0	110.0	110.0
3/6		60.4	80.5	110.0	110.0	110.0
2/0	7/0	100.7	110.0	110.0	110.0	110.0
2/6		80.5	107.4	110.0	110.0	110.0
3/0		67.1	89.5	110.0	110.0	110.0
3/6		57.5	76.7	110.0	108.0	110.0
2/0	7/6	94.0	110.0	110.0	110.0	110.0
2/6		75.2	100.3	110.0	110.0	110.0
3/0		62.7	83.6	110.0	110.0	110.0
3/6		53.7	71.6	107.4	100.9	110.0
2/0	8/0	88.2	110.0	110.0	110.0	110.0
2/6		70.5	94.1	110.0	110.0	110.0
3/0		58.8	78.4	110.0	110.0	110.0
3/6		50.4	67.2	100.8	94.6	110.0
2/0	8/6	83.0	110.0	110.0	110.0	110.0
2/6		66.4	88.6	110.0	110.0	110.0
3/0		55.4	73.8	110.0	103.9	110.0
3/6		47.4	63.3	94.9	89.1	110.0
2/0	9/0	78.5	104.6	110.0	110.0	110.0
2/6		62.8	83.7	110.0	110.0	110.0
3/0		52.3	69.7	104.6	98.2	110.0
2/0	9/6	74.4	99.1	110.0	110.0	110.0
2/6		59.5	79.3	110.0	110.0	110.0
3/0		49.6	66.1	99.1	93.1	110.0
2/0	10/0	70.7	94.2	110.0	110.0	110.0
2/6		56.5	75.4	110.0	106.1	110.0
3/0		47.1	62.8	94.2	88.4	110.0

ANCHORS:

TYPE 'B'– 1/4" DIA. ULTRACON BY 'ELCO' (Fu=177 KSI, Fy=155 KSI)

INTO 2BY WOOD BUCKS OR WOOD STRUCTURES
1–1/2" MIN. PENETRATION INTO WOOD

THRU 1BY WOOD BUCKS INTO CONCRETE
1–1/4" MIN. EMBED INTO CONC. OR MASONRY

DIRECTLY INTO CONCRETE
1–1/4" MIN. EMBED INTO CONC. OR MASONRY

– AT HEAD

EDGE DISTANCES

INTO CONCRETE AND MASONRY = 2" MIN.
INTO WOOD STRUCTURE = 1" MIN.

TYPE 'C'– 1/4" DIA. ULTRACON BY 'ELCO' (Fu=177 KSI, Fy=155 KSI)

DIRECTLY INTO CONCRETE
1–3/4" MIN. EMBED INTO CONC.

– AT HEAD OR SILL

EDGE DISTANCES

INTO CONCRETE = 2–1/2" MIN.

CONCRETE f'c = 3000 PSI MIN.
C–90 HOLLOW/FILLED BLOCK f'm = 2000 PSI MIN.

PRODUCT REVISED
as complying with the Florida Building Code
Acceptance No. 12-0706.04
Expiration Date 11/9/12

TYPICAL ANCHORS SPACED AS SHOWN IN DETAILS AND CHARTS.
ANCHORS TO BE AT 6" FROM CORNERS
MAX. SPACING 24" O.C. AT HEAD & SILL.

STEPS TO USE CHARTS:

1. SELECT TYPE OF ANCHOR.
2. FOR SIZE OF UNITS DETERMINE ALLOWABLE LOAD CAPACITY. THIS LOAD CAPACITY MUST MEET OR EXCEED DESIGN WIND LOAD REQUIREMENT DETERMINE IN STEP 1 OF SHEET 6.

Engr: JAVAD AHMAD
CIVIL
FLA. PE # 70592
C.A.N. 3538

JUN 29 2012

AL-FAROOQ CORPORATION
ENGINEERS, PLANNERS & PRODUCT DESIGN
1235 SW 87 AVE
MIAMI, FLORIDA 33174
TEL. (305) 264-8100 FAX. (305) 262-6978
COMP-ANL\W06-73CG

SERIES 450 INSWING DOOR AND SIDELITE

CGI WINDOWS & DOORS
10100 N.W. 25TH STREET
MIAMI, FL. 33172
TEL. (305) 593-6590 FAX. (305) 593-6592

revisions:

no	date	by	description
A	07.23.09		UPDATED FOR 2007 FBC
B	09.01.11		GENERAL REVISION
C	01.09.12		REV. PER BNC COMMENTS
D	04.23.12		REV. PER PERA COMMENTS
E	06.29.12		NO CHANGE THIS SHEET

date: 10-27-06
scale: 1/2" = 1"
dr. by: HAMID
chk. by:

drawing no.
W06-73

sheet 7 of 7

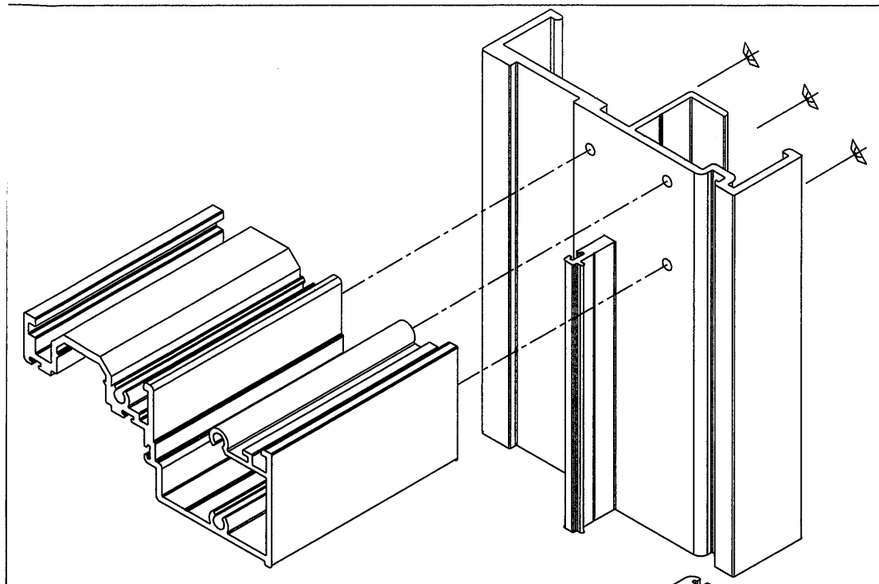

HEAD CORNER DETAIL

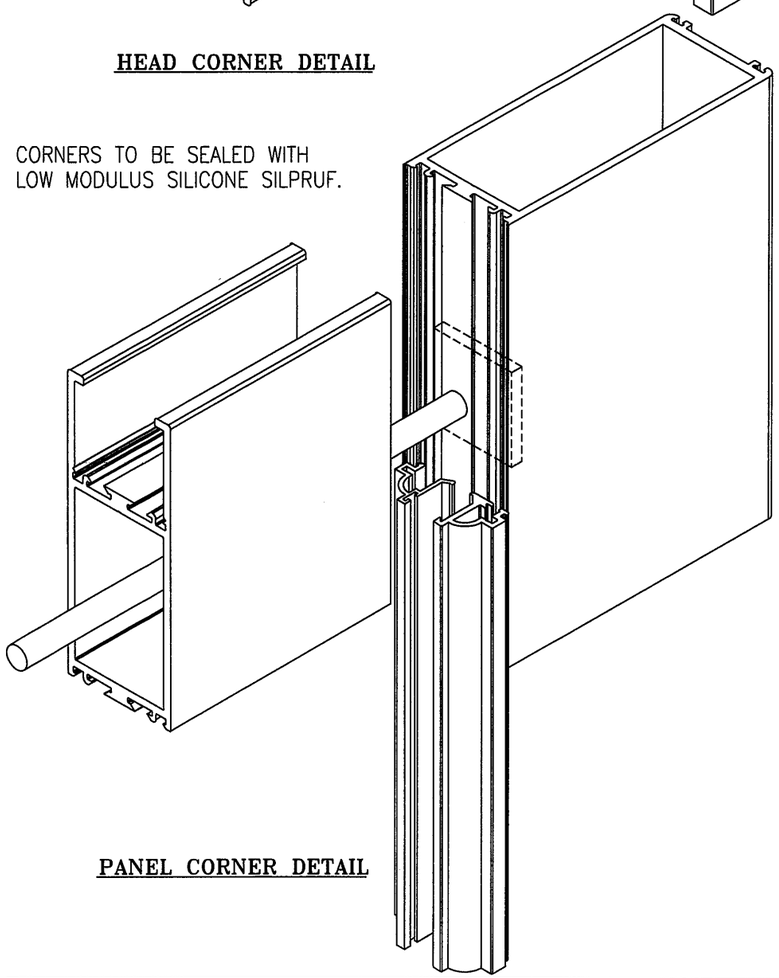

CORNERS TO BE SEALED WITH
LOW MODULUS SILICONE SILPRUF.

PANEL CORNER DETAIL

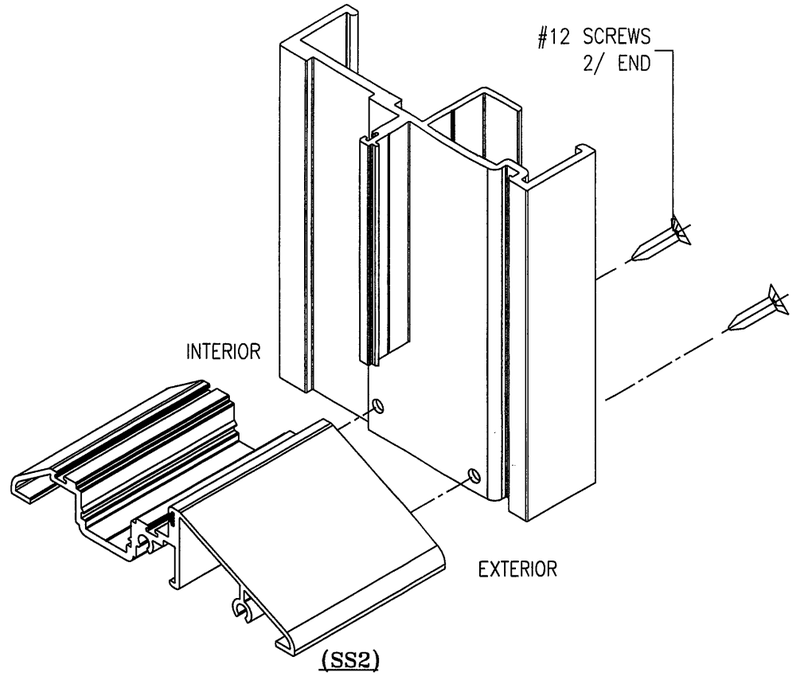

(SS2)
RESIDENTIAL SADDLE SILL CORNER CONSTRUCTION

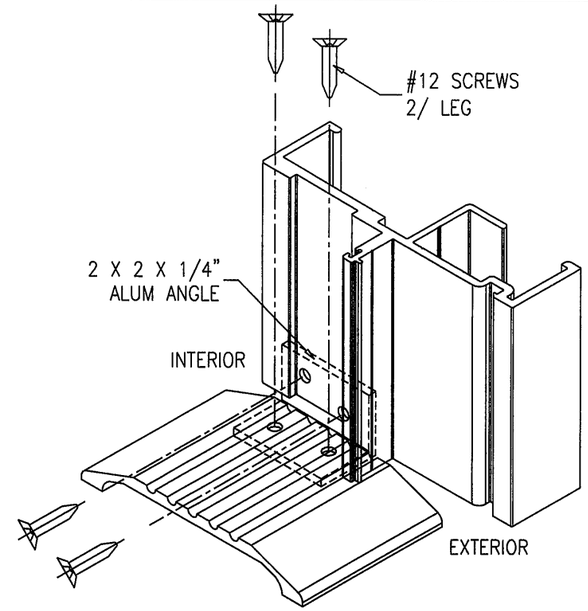

(SS1)
ADA SILL CORNER DETAIL

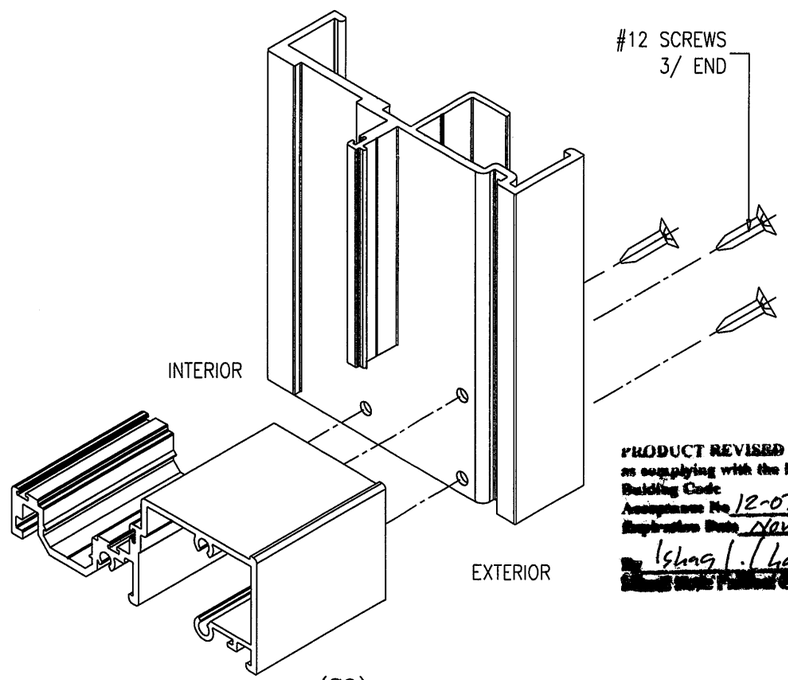

(SO)
STD. SILL CORNER DETAIL

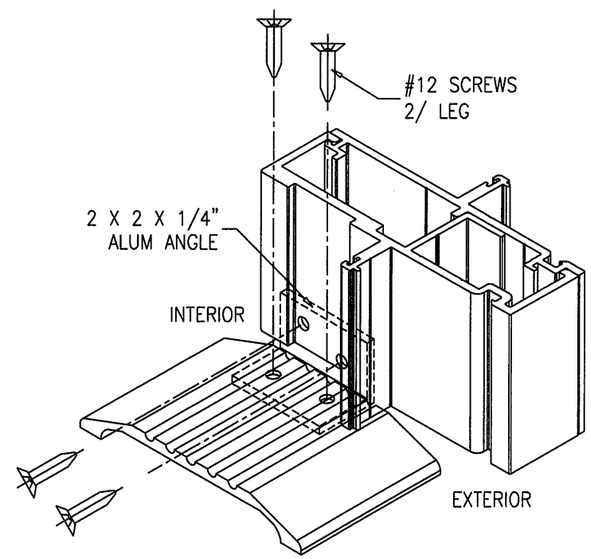

ADA SILL @ MULLION

PRODUCT REVISED
as complying with the Florida
Building Code
Acceptance No 12-0706.04
Expiration Date Nov 09, 2016
By Ishaq I. Chanda
[redacted]

Engr: JAVAD AHMAD
CIVIL
FLA. PE # 70592
C.A.N. 3538

JUN 29 2012

AL-FAROOQ CORPORATION
ENGINEERS, PLANNERS & PRODUCT DESIGN
1235 SW 87 AVE
MIAMI, FLORIDA 33174
TEL. (305) 264-8100 FAX. (305) 262-6978
COMP-ANL\W06-73CG

SERIES 450 INSWING DOOR AND SIDELITE

CGI WINDOWS & DOORS
10100 N.W. 25TH STREET
MIAMI, FL. 33172
TEL. (305) 593-6590 FAX. (305) 593-6592

revisions:

no	date	by	description
A	07.23.09		UPDATED FOR 2007 FBC
B	09.01.11		GENERAL REVISION
C	01.09.12		REV. PER BNC COMMENTS
D	04.23.12		REV. PER PERA COMMENTS
E	06.29.12		NO CHANGE THIS SHEET

date: 10-27-06
scale: 1/2" = 1"
dr. by: HAMID
chk. by:

drawing no.
W06-73

sheet 7.1of 7