MIAMI-DADE COUNTY
PRODUCT CONTROL SECTION
11805 SW 26 Street, Room 208
Miami, Florida 33175-2474
T (786) 315-2590 F (786) 315-2599
www.miamidade.gov/economy

DEPARTMENT OF REGULATORY AND ECONOMIC RESOURCES (RER)
BOARD AND CODE ADMINISTRATION DIVISION

NOTICE OF ACCEPTANCE (NOA)

Stanley Access Technologies, LLC
65 Scott Swamp Road
Farmington, CT 06032

SCOPE:

This NOA is being issued under the applicable rules and regulations governing the use of construction materials. The documentation submitted has been reviewed and accepted by Miami-Dade County RER -Product Control Section to be used in Miami Dade County and other areas where allowed by the Authority Having Jurisdiction (AHJ).

This NOA shall not be valid after the expiration date stated below. The Miami-Dade County Product Control Section (In Miami Dade County) and/or the AHJ (in areas other than Miami Dade County) reserve the right to have this product or material tested for quality assurance purposes. If this product or material fails to perform in the accepted manner, the manufacturer will incur the expense of such testing and the AHJ may immediately revoke, modify, or suspend the use of such product or material within their jurisdiction. RER reserves the right to revoke this acceptance, if it is determined by Miami-Dade County Product Control Section that this product or material fails to meet the requirements of the applicable building code.

This product is approved as described herein, and has been designed to comply with the Florida Building Code, including the High Velocity Hurricane Zone.

DESCRIPTION: Series "Dura Storm" Aluminum Automatic Sliding Glass Door : O-Sx-Sx-O, O-Sx, So-Sx-Sx-So and So-Sx w/ Operable Panel & Full Breakout-LMI

APPROVAL DOCUMENT: Drawing No. **12-SAT-13**, titled "Dura-Storm 2000/3000 Auto SGD, Bi-parting/Single Slide-LMI", sheets 1 through 12 of 12 prepared by Engineering Express, dated 07-01-12 and last revised on 04/01/2013, signed and sealed by Frank L. Bennardo, P.E., bearing the Miami-Dade County Product Control Approval stamp with the Notice of Acceptance number and approval date by the Miami-Dade County Product Control Section.

MISSILE IMPACT RATING: Large and Small Missile Impact

LIMITATIONS:

1. See elevation for anchors requirements in sheet 1 and Header clusters details in sheet 5 and Threshold clusters in sheet 8. See sheets 2 & 3 for concealed 3-point locking (active panel) & 2-point (in-active).
2. Not approved where water infiltration is required. Fixed glass more than 36" wide must be supported with approved setting blocks per FBC requirements.
3. Electrical devices, functions and installation is not part of this approval and to be reviewed and approved by Authority Having Jurisdiction (AHJ)

LABELING: Each unit shall bear a permanent label with the manufacturer's name or logo, city, state and series and following statement: "Miami-Dade County Product Control Approved", noted herein.

RENEWAL of this NOA shall be considered after a renewal application has been filed and there has been no change in the applicable building code negatively affecting the performance of this product.

TERMINATION of this NOA will occur after the expiration date or if there has been a revision or change in the materials, use, and/or manufacture of the product or process. Misuse of this NOA as an endorsement of any product, for sales, advertising or any other purposes shall automatically terminate this NOA. Failure to comply with any section of this NOA shall be cause for termination and removal of NOA.

ADVERTISEMENT: The NOA number preceded by the words Miami-Dade County, Florida, and followed by the expiration date may be displayed in advertising literature. If any portion of the NOA is displayed, then it shall be done in its entirety.

INSPECTION: A copy of this entire NOA shall be provided to the user by the manufacturer or its distributors and shall be available for inspection at the job site at the request of the Building Official.

This NOA consists of this page 1 and evidence pages E-1, as well as approval document mentioned above.

The submitted documentation was reviewed by **Ishaq I. Chanda, P.E.**

MIAMI-DADE COUNTY APPROVED

4/4/13

NOTICE OF ACCEPTANCE: EVIDENCE SUBMITTED

A. DRAWINGS

1. Manufacturer's die drawings and sections.
2. Drawing No. **12-SAT-13**, titled "Dura-Storm 2000/3000 Auto SGD, Bi-parting/Single Slide-LMI", sheets 1 through 12 of 12, prepared by Engineering Express, dated 07-01-12 and last revised on 04/01/2013, signed and sealed by Frank L. Bennardo, P.E.

B. TESTS

1. Test reports on: 1) Air Infiltration Test, per FBC, TAS 202-94
   2) Uniform Static Air Pressure Test, Loading per FBC TAS 202-94
   3) Water Resistance Test, per FBC, TAS 202-94 (Not conducted)
   4) Large Missile Impact Test per FBC, TAS 201-94
   5) Cyclic Wind Pressure Loading per FBC, TAS 203-94
   6) Forced Entry Test, per FBC 2411 3.2.1, TAS 202-94

Along with installation diagram of aluminum automatic entrance doors, prepared by Fenestration Testing Laboratory, Inc. Test Report No. **FTL-6803,** dated 05/11/12 and last revised on 03-21-13, signed and sealed by Marlin D. Brinson, P. E.
Note: This test report has been revised by an addendum letter dated Nov 21, 2012, issued by Fenestration Testing Lab, signed and sealed by Marlin D. Brinson, P. E.

C. CALCULATIONS

1. Anchor verification calculations and structural analysis, complying with FBC-2010, prepared by Engineering Express, dated 08-02-12, signed and sealed by Frank L. Bennardo, P.E.
2. Glazing complies w/ ASTME-1300-02 & -04.

D. QUALITY ASSURANCE

1. Miami Dade Department of Regulatory and Economic Resources (RER).

E. MATERIAL CERTIFICATIONS

1. Notice of Acceptance No. **12-1213.04** issued to SAF-GLAS, L.L.C. for "**SAF GLAS, Polycarbonate laminate**", expiring on 12/16/13.
2. Notice of Acceptance No. **11-0624.01** issued to E.I. DuPont DeNemours & Co., Inc. for their "**DuPont PVB Butacite ®**", expiring on 12/11/16.
3. Technical strength data of Trelleborg EPDM per ASTM C864.

F. STATEMENTS

1. Statement letter of conformance and letter of no financial interest, prepared by Engineering Express, dated 08-02-12, signed and sealed by Frank L. Bennardo, P.E.
2. Lab compliance as part of the above referenced test report.

G. OTHER

1. Test proposal # 11-1016, dated NOV 11, 2011 approved by PERA.
2. Manufacture supplied Adam Rites deadbolt/hook and bolts mechanism brochures.

Ishaq I. Chanda

Ishaq I. Chanda, P.E.
Product Control Examiner
NOA No. 12-0807.03
Expiration Date: April 04, 2018
Approval Date: April 04, 2013

DURA-STORM SERIES 2000/3000 TYPICAL ELEVATIONS

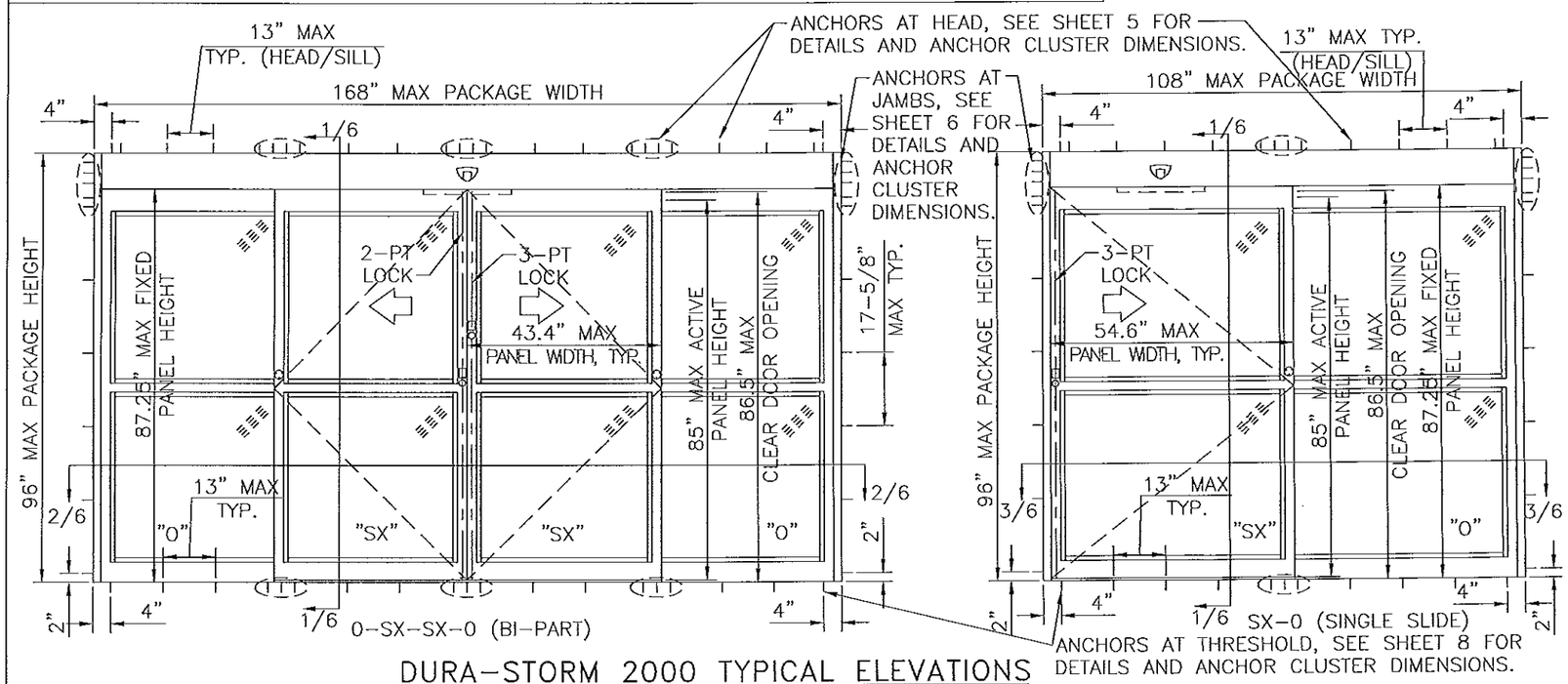

DURA-STORM 2000 TYPICAL ELEVATIONS

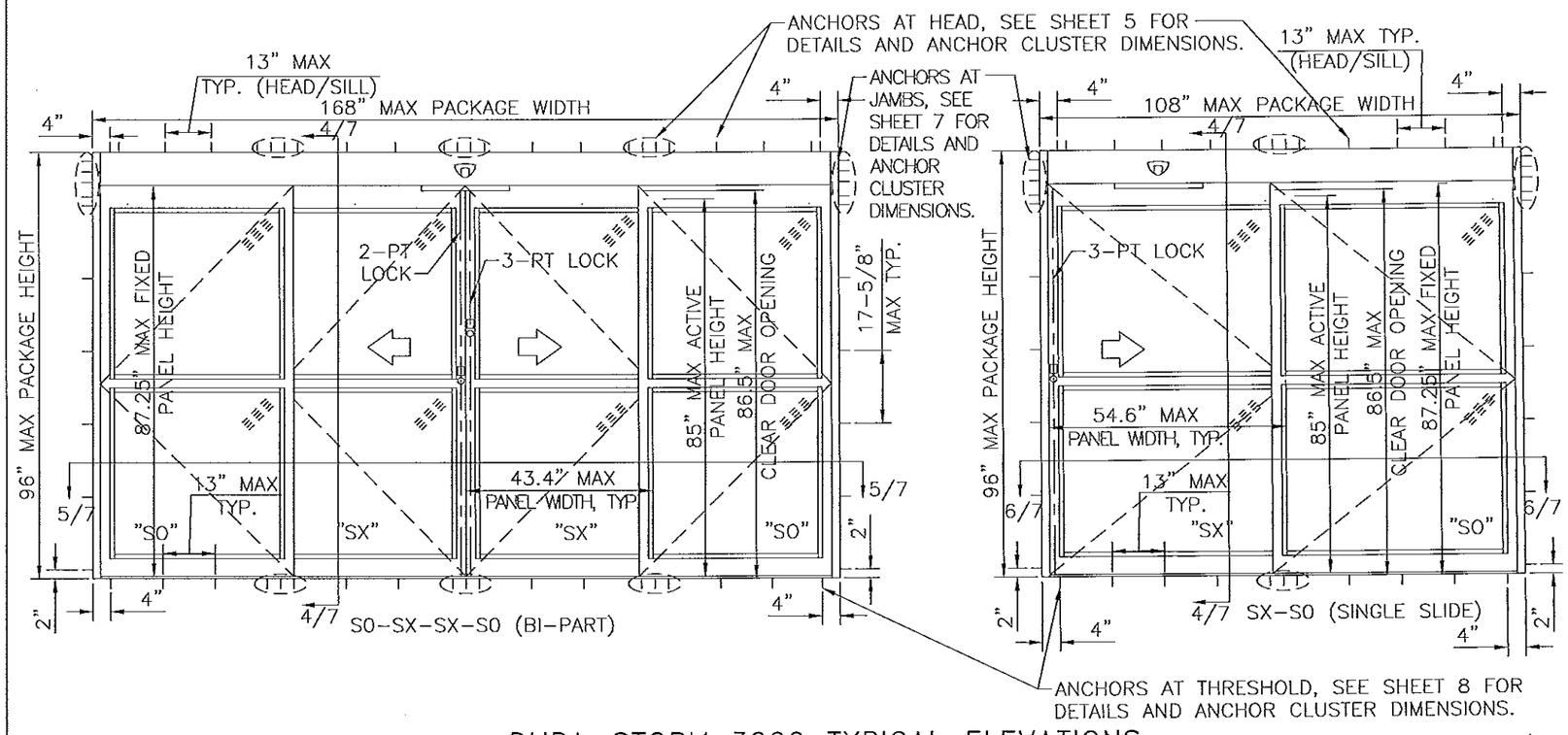

DURA-STORM 3000 TYPICAL ELEVATIONS

GENERAL NOTES

1. DOORS HAVE BEEN TESTED & DESIGNED IN ACCORDANCE WITH THE REQUIREMENTS OF THE 2010 FLORIDA BUILDING CODE HIGH VELOCITY HURRICANE ZONE (HVHZ) AND MIAMI-DADE COUNTY PROTOCOLS TAS 201 FOR LARGE MISSILE IMPACT, TAS 202 FOR UNIFORM STATIC AIR PRESSURE AND TAS 203 FOR CYCLIC WIND LOADING.
2. PERMIT HOLDER SHALL VERIFY THE ADEQUACY OF THE EXISTING STRUCTURE TO WITHSTAND ADDITIONAL IMPOSED LOADS. 1X OR 2X WOOD BUCKS BY OTHERS SHALL BE ANCHORED PROPERLY TO TRANSFER LOADS TO THE EXISTING STRUCTURE.
3. NO INCREASE IN ALLOWABLE STRESS HAS BEEN USED IN THE DESIGN OF THESE PRODUCTS. WIND LOAD DURATION FACTOR Cd = 1.6 WAS USED FOR WOOD ANCHOR DESIGN.
4. POSITIVE AND NEGATIVE DESIGN PRESSURES CALCULATED FOR USE WITH THIS SYSTEM SHALL BE DETERMINED PER SEPARATE ENGINEERING IN ACCORDANCE WITH THE GOVERNING CODE. PRESSURE REQUIREMENTS AS DETERMINED IN ACCORDANCE WITH ASCE 7 AND CHAPTER 1609 OF THE FLORIDA BUILDING CODE SHALL BE LESS THAN OR EQUAL TO THE POSITIVE OR NEGATIVE DESIGN PRESSURE CAPACITY VALUES LISTED HEREIN FOR ANY ASSEMBLY AS SHOWN.
5. DESIGN PRESSURES NOTED HEREIN ARE BASED ON MAXIMUM TESTED PRESSURES DIVIDED BY A 1.5 SAFETY FACTOR.
6. DOORS DETAILED HEREIN HAVE BEEN DESIGNED AND TESTED TO THE MAXIMUM SPANS AND LAODS SHOWN ON THESE DRAWINGS REFERENCE FENESTRATION TESTING LAB REPORT 6803.
7. ANCHORS SHALL BE INSTALLED PER MANUFACTURER'S SPECIFICATIONS, SPACED AS NOTED HEREIN. MINIMUM EMBEDMENT AND EDGE DISTANCE EXCLUDES STUCCO, FOAM, BRICK, AND OTHER WALL FINISHES.
8. WHERE EXISTING STRUCTURE IS WOOD FRAMING, EXISTING CONDITIONS MAY VARY. FIELD VERIFY THAT FASTENERS ARE INTO ADEQUATE WOOD FRAMING MEMBERS, NOT INTO PLYWOOD.
9. WOOD HOST STRUCTURE SHALL BE "SOUTHERN PINE" G=0.55 OR GREATER DENSITY.
10. WHERE EXISTING STRUCTURE IS WOOD FRAMING, EXISTING CONDITIONS MAY VARY. FIELD VERIFY THAT FASTENERS ARE INTO ADEQUATE WOOD FRAMING MEMBERS, NOT INTO PLYWOOD.
11. THE SYSTEM DETAILED HEREIN IS GENERIC AND DOES NOT PROVIDE INFORMATION FOR A SPECIFIC SITE. FOR SITE CONDITIONS DIFFERENT FROM THE CONDITIONS DETAILED HEREIN, A LICENSED ENGINEER OR REGISTERED ARCHITECT SHALL PREPARE SITE SPECIFIC DOCUMENTS FOR USE IN CONJUNCTION WITH THIS DOCUMENT FOR INSTALLATIONS OUTSIDE THE HVHZ; WITHIN THE HVHZ, A ONE-TIME APPROVAL FROM MIAMI-DADE COUNTY SHALL BE OBTAINED.
12. ALL BOLTS ND WASHERS SHALL BE ZINC COATED, GALVANIZED, OR STAINLESS STEEL WITH A MINIMUM TENSILE STRENGTH OF 60 KSI, EXEPT INSTLLATION ANCHORS.
13. ALL SINGLE SLIDE ENTRANCES ARE SHOWN "RIGHT HAND"; "LEFT HAND" IS MIRROR IMAGE.

SYSTEM NOTES

1. ALL ALUMINUM PARTS SHALL BE 6063-T6 ALUMINUM ALLOY AND TEMPER, UNLESS OTHERWISE NOTED.
2. GLAZING 9/16" LAMINATED IMPACT RATED (SEE GLAZING DETAILS SHEET 12)
3. CORNER PANEL CONSTRUCTION: PANEL CORNERS ARE BUTT JOINED, SECURED WITH FOUR (4) FULL WIDTH 5/16" THREADED TIE RODS AT TOP RAIL, INTERMEDIATE HORIZONTAL MUNTIN BAR, AND BOTTOM RAIL. ALL JOINTS ARE WELDED.
4. THE GLAZING MATERIAL IN BOTH FIXED AND SLIDING PANELS OF ALL SLIDING DOORS SHALL COMPLY WITH THE REQUIREMENTS IN THE PERFORMANCE SPECIFICATIONS AND METHODS OF TEST FOR SAFETY GLAZING MATERIALS USED IN BUILDINGS, PER FBC REQUIREMENTS.

Approved as complying with the Florida Building Code
Date APR 04, 2013
NOAA 12-0807.03
Miami-Dade Product Control

FRANK L. BENNARDO LICENSE No. 46549 STATE OF FLORIDA PROFESSIONAL ENGINEER
FRANK L. BENNARDO, P.E. #PE0046549
04/01/2013

ENGINEERING EXPRESS®
160 SW 12th AVENUE, #1000
DEERFIELD BEACH, FL 33442
Ph: (954) 354-0660 Fax: (954) 354-0445
WWW.ENGEXP.COM
CERT OF AUTH #9885
A. FRANK L. BENNARDO, P.E., INC. INNOVATION

STANLEY
ACCESS TECHNOLOGIES
65 SCOTT SWAMP ROAD, FARMINGTON, CT 06032

SERIES "DURA-STORM 2000/3000" AUTO SGD
BI-PARTING/SINGLE SLIDE (LMI)
MIAMI-DADE NOTICE OF ACCEPTANCE

REMARKS	DRWN	CHKD	DATE
INIT ISSUE	KL	FLB	07/01/12
REVIEWER COMMENT	KL	FLB	11/26/12
ADD'L COMMENTS	KL	FLB	01/28/13
ADD'L COMMENTS	KL	FLB	03/22/13
ADD'L COMMENTS	KL	FLB	04/01/13

12-SAT-13

SCALE: - 04

PAGE DESCRIPTION:
-
-

1 / 12

F:\01 Project Files\Stanley (SAT)\2012\12-SAT-13 Dura-Storm 2K-3K LMI NOA\12-SAT-13_04a Dura-Storm 2K-3K LMI NOA-LWH2.dwg
04/01/2013 - 2:04pm keithl

DURA-STORM SERIES 2000 ELEVATION AND PLAN

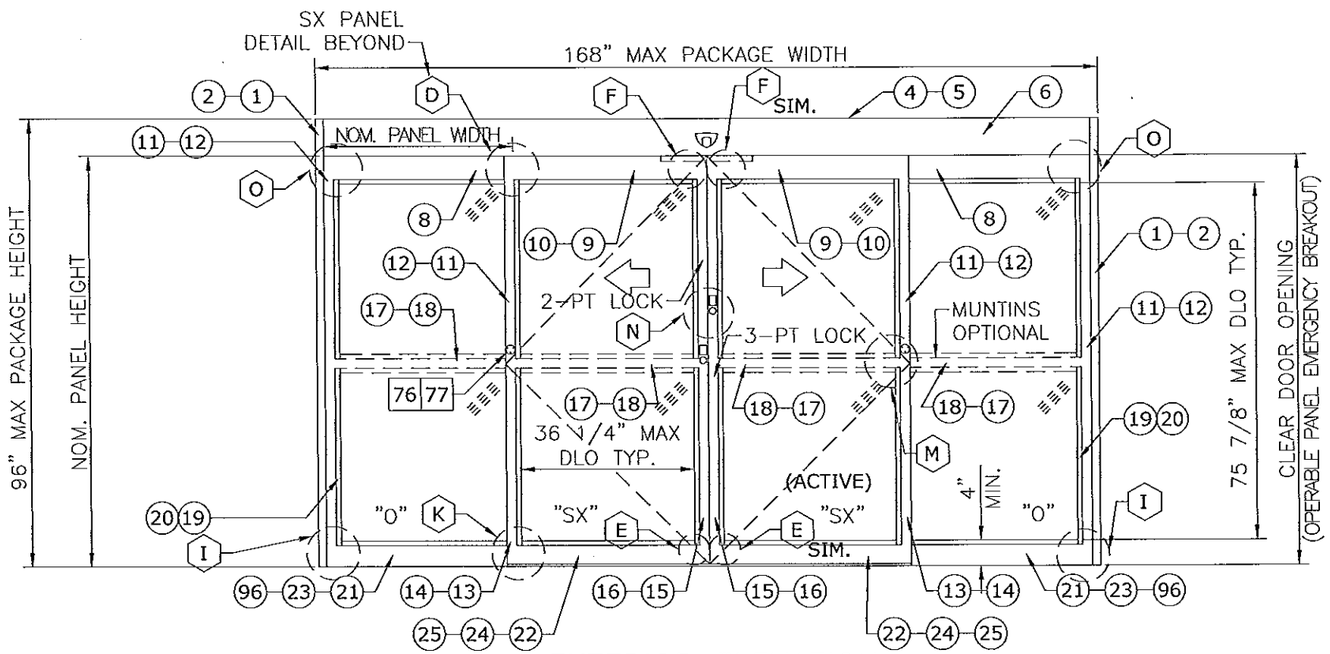

EXTERIOR ELEVATION

(XX) : EXTRUSION

(XX)(XX) : EXTRUSION, MULTI-PIECE

(XX)-(XX) : EXTRUSION, OPTION

[XX] : PART

[XX][XX] : PART, MULTI-PIECE

[XX]-[XX] : PART, OPTION

(XX) : DETAIL

(XX)-(XX) : DETAIL, OPTION

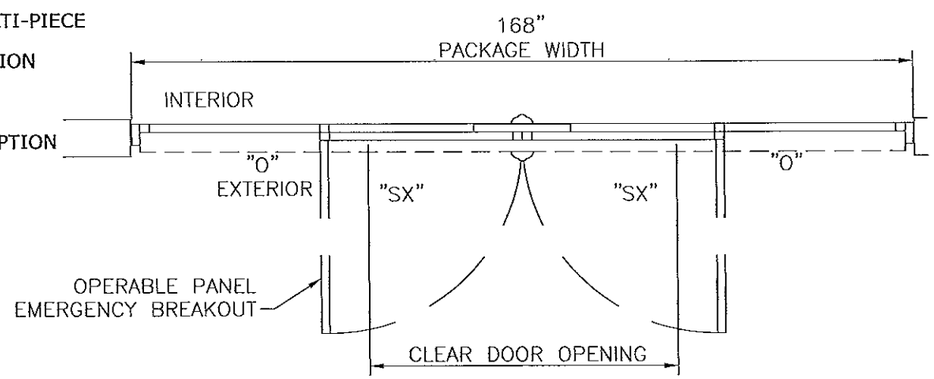

PLAN

NOTES
1. TYPICAL DOOR SHOWN. STILE, RAIL AND MUNTIN OPTIONS AVAILABLE AS INDICATED.
2. HORIZONTAL MUNTIN BAR NOT REQUIRED AS INDICATED BY DASHED LINES. MAX DLO: 36 1/4" W X 75 3/4" H AS SHOWN
3. 5-POINT LOCKING STANDARD (3-PT ACTIVE & 2-PT).
4. PRODUCT SHALL BE MANUFACTURED AND INSTALLED IN ACCORDANCE WITH PRODUCT APPROVALS.
5. SEE SHEETS 5, 6 AND 8 FOR REQUIRED ANCHORAGE.

DESIGN RATINGS		
MISSILE IMPACT RATING		
☒	LARGE AND SMALL MISSILE IMPACT	
DESIGN PRESSURE RATING (PSF[Pa])		
	WHERE WATER INFILTRATION RATING IS REQUIRED	WHERE WATER INFILTRATION RATING IS NOT REQUIRED
POSITIVE	NOT APPROVED	75 PSF
NEGATIVE	NOT APPROVED	75 PSF

SERIES 2000 BI-PART AVAILABLE PACKAGE WIDTH INFORMATION						
PACKAGE WIDTH	ROUGH OPENING	STILE TYPE	NOMINAL CLEAR DOOR OPENING	NOMINAL PANEL WIDTH (SX)	NOMINAL PANEL WIDTH (O)	CAULKING ALLOWANCE
168.0"	168.5"	NARROW	70.6"	42.7"	42.7"	1/4" / SIDE
168.0"	168.5"	MEDIUM	66.3"	43.4"	43.4"	1/4" / SIDE

SERIES 2000 BI-PART AVAILABLE PACKAGE HEIGHT INFORMATION			
PACKAGE HEIGHT	ROUGH OPENING	NOMINAL CLEAR DOOR OPENING	CAULKING ALLOWANCE
96.0"	96.3"	86.5"	1/4" TOP

Approved as complying with the Florida Building Code
Date 4/4/13
NOA# 12-0307.03
Miami Dade Product Control
By [signature]

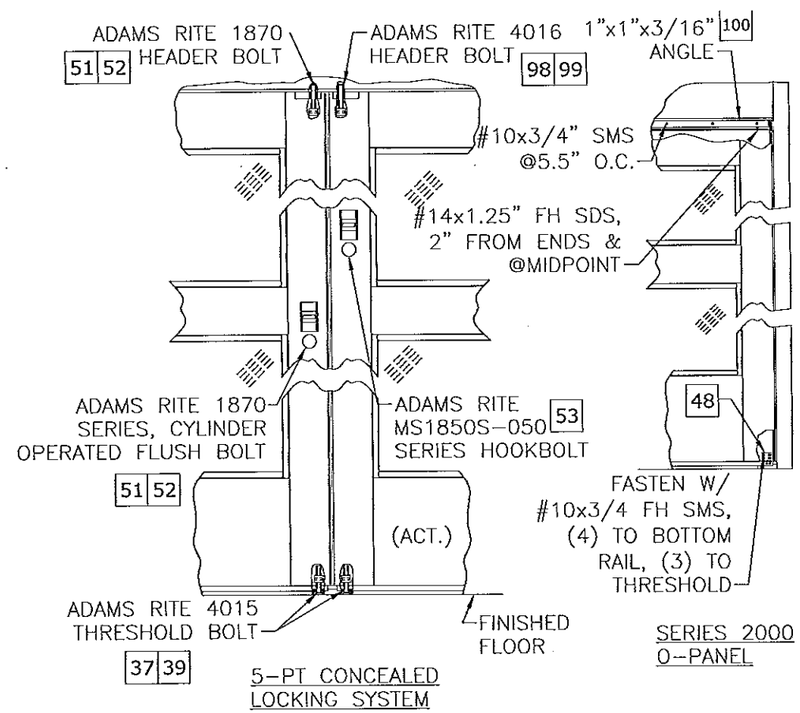

5-PT CONCEALED LOCKING SYSTEM

SERIES 2000 O-PANEL

FRANK L. BENNARDO
FRANK L. BENNARDO, P.E.
PE0046549
No. 46549
04/01/2013
STATE OF FLORIDA
PROFESSIONAL ENGINEER
ENGINEERING EXPRESS®
160 SW 12th AVENUE, #204
DEERFIELD BEACH, FL 33442
PH: (954) 354-0660 FAX: (954) 354-0445
WWW.ENGEXP.COM
CERT OF AUTH #8985
A FRANK L. BENNARDO, P.E., INC. INNOVATION

STANLEY
ACCESS TECHNOLOGIES
65 SCOTT SWAMP ROAD, FARMINGTON, CT 06032

SERIES "DURA-STORM 2000/3000" AUTO SGD
BI-PARTING/SINGLE SLIDE (LMI)
MIAMI-DADE NOTICE OF ACCEPTANCE

REMARKS	DRWN	CHKD	DATE
INIT ISSUE	KL	FLB	07/01/12
REVIEWER COMMENT	KL	FLB	11/28/12
ADD'L COMMENTS	KL	FLB	01/28/13
ADD'L COMMENTS	KL	FLB	03/22/13
ADD'L COMMENTS	KL	FLB	04/01/13

12-SAT-13
SCALE: - 04
PAGE DESCRIPTION:
-
-

12

2

F:\01 Project Files\Stanley (SAT)\2012\12-SAT-13 Dura-Storm 2K-3K LMI NOA\12-SAT-13_04a Dura-Storm 2K-3K LMI NOA-LWH2.dwg
keithl
04/01/2013 - 2:05pm

DURA-STORM SERIES 3000 ELEVATION AND PLAN

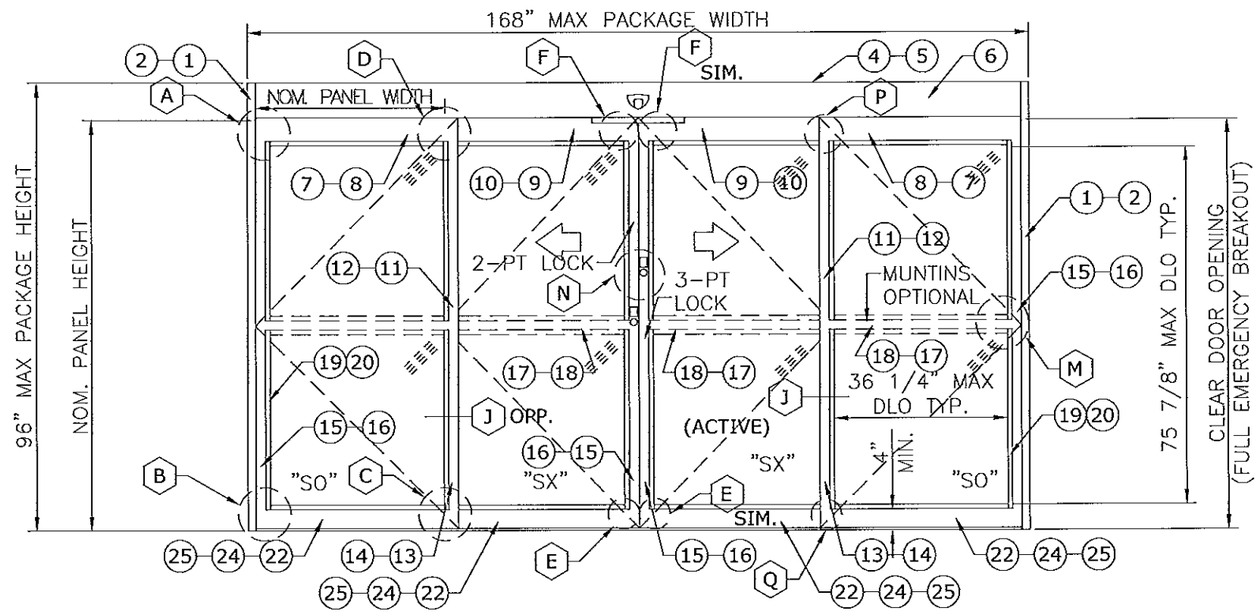

EXTERIOR ELEVATION

(XX) : EXTRUSION

(XX)(XX) : EXTRUSION, MULTI-PIECE

(XX)-(XX) : EXTRUSION, OPTION

[XX] : PART

[XX][XX] : PART, MULTI-PIECE

[XX]-[XX] : PART, OPTION

(XX) : DETAIL

(XX)-(XX) : DETAIL, OPTION

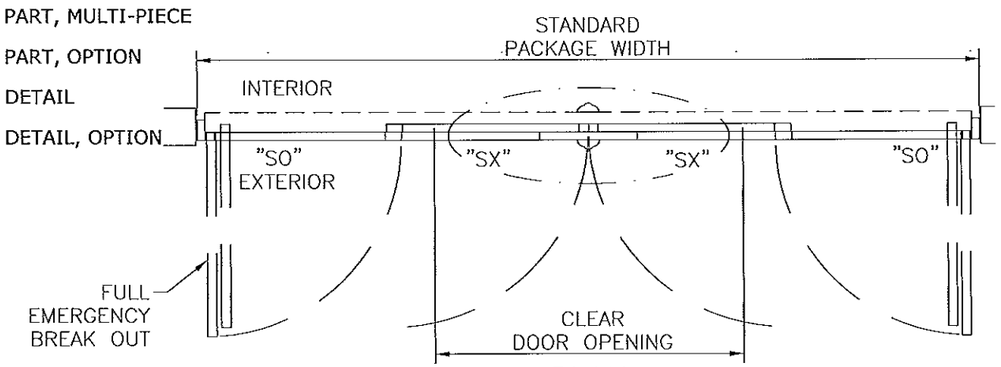

PLAN

NOTES

1. TYPICAL DOOR SHOWN. STILE, RAIL AND MUNTIN OPTIONS AVAILABLE AS INDICATED.
2. HORIZONTAL MUNTIN BAR NOT REQUIRED, AS INDICATED BY DASHED LINES. MAX DLO: 36 1/4" W X 75 3/4" H AS SHOWN
3. 5-POINT LOCKING STANDARD (3-PT ACTIVE & 2-PT).
4. PRODUCT SHALL BE MANUFACTURED AND INSTALLED IN ACCORDANCE WITH PRODUCT APPROVALS.
5. SEE SHEETS 5, 7, AND 8 FOR REQUIRED ANCHORAGE.

DESIGN RATINGS		
MISSILE IMPACT RATING		
☒	LARGE AND SMALL MISSILE IMPACT	
DESIGN PRESSURE RATING (PSF[Pa])		
	WHERE WATER INFILTRATION RATING IS REQUIRED	WHERE WATER INFILTRATION RATING IS NOT REQUIRED
POSITIVE	NOT APPROVED	75 PSF
NEGATIVE	NOT APPROVED	75 PSF

SERIES 3000 BI-PART AVAILABLE PACKAGE WIDTH INFORMATION

PACKAGE WIDTH	ROUGH OPENING	STILE TYPE	NOMINAL CLEAR DOOR OPENING	NOMINAL PANEL WIDTH (SX)	NOMINAL PANEL WIDTH (O)	CAULKING ALLOWANCE
168.0"	168.5"	NARROW	70.6"	42.7"	42.7"	1/4" / SIDE
168.0"	168.5"	MEDIUM	66.3"	43.4"	43.4"	1/4" / SIDE

SERIES 3000 BI-PART AVAILABLE PACKAGE HEIGHT INFORMATION

PACKAGE HEIGHT	ROUGH OPENING	NOMINAL CLEAR DOOR OPENING	CAULKING ALLOWANCE
96.0"	96.3"	86.5"	1/4" TOP

Approved as complying with the Florida Building Code
Date 4/9/13
NOA# 12-0507.03
Miami Dade Product Control
By

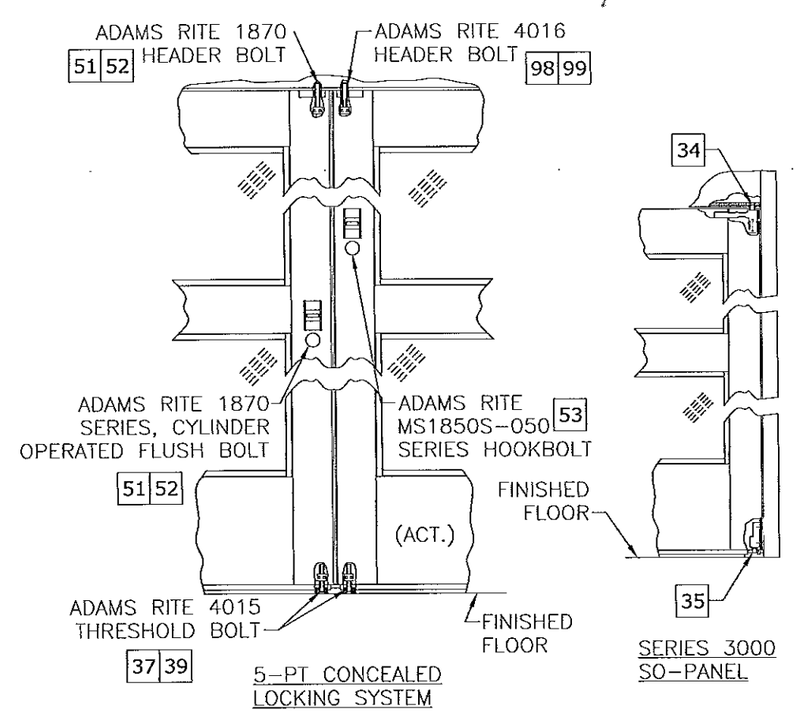

5-PT CONCEALED LOCKING SYSTEM

SERIES 3000 SO-PANEL

FRANK L. BENNARDO, P.E.
PE0046549
STATE OF FLORIDA
PROFESSIONAL ENGINEER
04/01/2013
ENGINEERING EXPRESS®
160 SW 12th AVENUE, #101
DEERFIELD BEACH, FL 33442
Ph: (954) 354-0660 Fax: (954) 354-0663
WWW.ENGEXP.COM
CERT OF AUTH #9885
A FRANK L. BENNARDO, P.E., INC. INNOVATION

STANLEY
ACCESS TECHNOLOGIES
65 SCOTT SWAMP ROAD, FARMINGTON, CT 06032

SERIES "DURA-STORM 2000/3000" AUTO SGD
BI-PARTING/SINGLE SLIDE (LMI)
MIAMI-DADE NOTICE OF ACCEPTANCE

REMARKS	DRWN	CHKD	DATE
INIT ISSUE	KL	FLB	07/01/12
REVIEWER COMMENT	KL	FLB	11/26/12
ADD'L COMMENTS	KL	FLB	01/28/13
ADD'L COMMENTS	KL	FLB	03/22/13
ADD'L COMMENTS	KL	FLB	04/01/13

12-SAT-13

SCALE: - 04

PAGE DESCRIPTION:

12

3

F:\01 Project Files\Stanley (SAT)\2012\12-SAT-13 Dura-Storm 2K-3K LMI NOA\12-SAT-13_04a Dura-Storm 2K-3K LMI NOA-LWH2.dwg
04/01/2013 - 2:05pm keithl

DURA-STORM SERIES 2000/3000 SINGLE SLIDES, ELEVATION AND PLAN

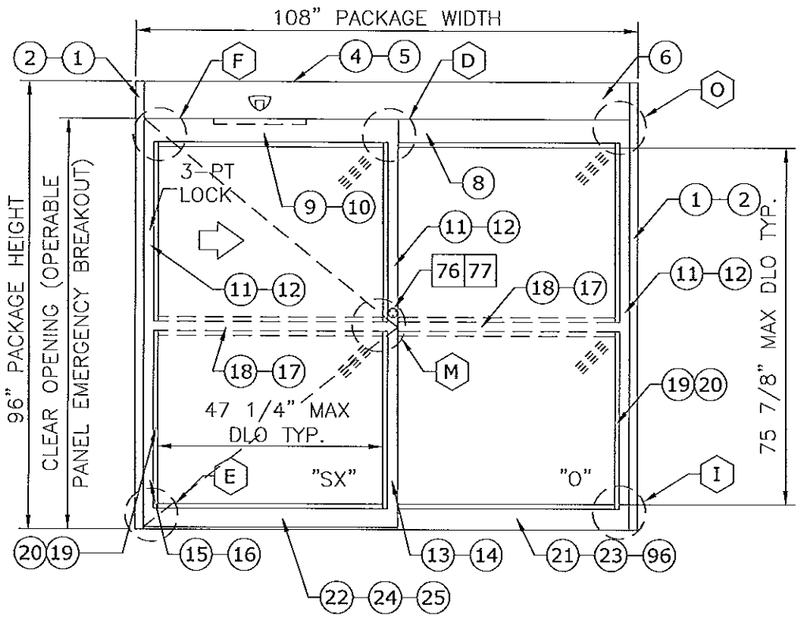

SERIES 2000 (SX-O) SINGLE SLIDE
EXTERIOR ELEVATION

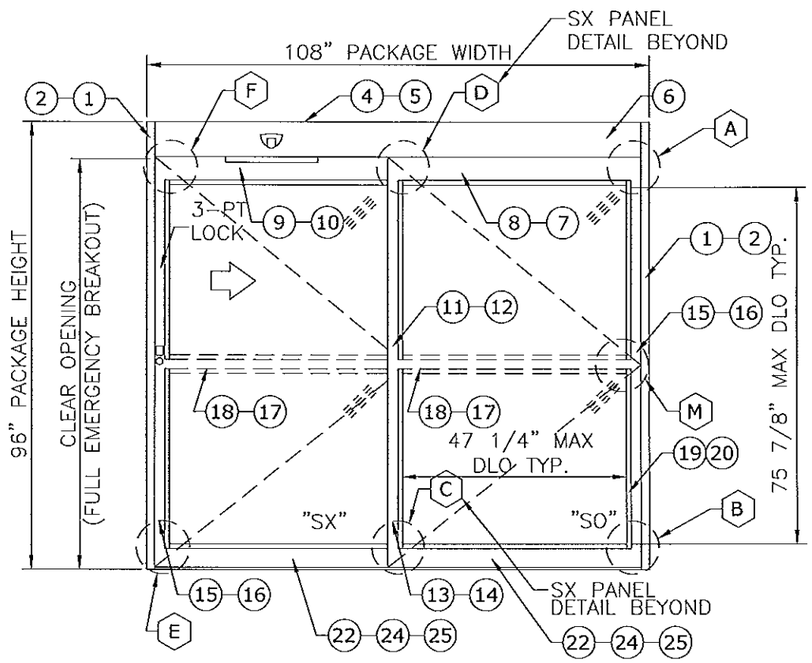

SERIES 3000 (SX-SO) SINGLE SLIDE
EXTERIOR ELEVATION

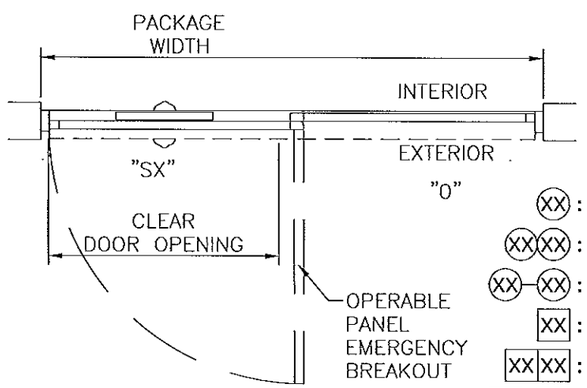

SERIES 2000 (SX-O) SINGLE SLIDE
PLAN

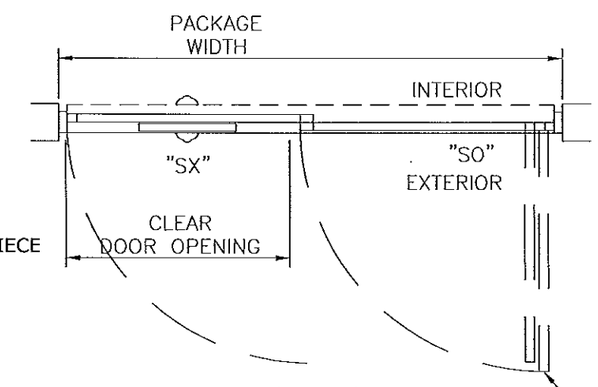

SERIES 3000 (SX-SO) SINGLE SLIDE
PLAN

(XX) : EXTRUSION
(XX)(XX) : EXTRUSION, MULTI-PIECE
(XX)-(XX) : EXTRUSION, OPTION
[XX] : PART
[XX][XX] : PART, MULTI-PIECE
[XX]-[XX] : PART, OPTION
(XX) : DETAIL
(XX)-(XX) : DETAIL, OPTION

DESIGN RATINGS		
MISSILE IMPACT RATING		
☒	LARGE AND SMALL MISSILE IMPACT	
DESIGN PRESSURE RATING (PSF[Pa])		
	WHERE WATER INFILTRATION RATING IS REQUIRED	WHERE WATER INFILTRATION RATING IS NOT REQUIRED
POSITIVE	NOT APPROVED	75 PSF
NEGATIVE	NOT APPROVED	75 PSF

SERIES 2000 AND 3000 SINGLE SLIDE AVAILABLE PACKAGE WIDTH INFORMATION

PACKAGE WIDTH	ROUGH OPENING	STILE TYPE	NOMINAL CLEAR DOOR OPENING	NOMINAL PANEL WIDTH (SX)	NOMINAL PANEL WIDTH (O)	CAULKING ALLOWANCE
108.0"	108.5"	NARROW	46.4"	53.8"	53.8"	1/4" / SIDE
108.0"	108.5"	MEDIUM	44.3"	54.6"	54.6"	1/4" / SIDE

SERIES 2000 AND 3000 SINGLE SLIDE AVAILABLE PACKAGE HEIGHT INFORMATION

PACKAGE HEIGHT	ROUGH OPENING	NOMINAL CLEAR DOOR OPENING	CAULKING ALLOWANCE
96.0"	96.3"	86.5"	1/4" TOP

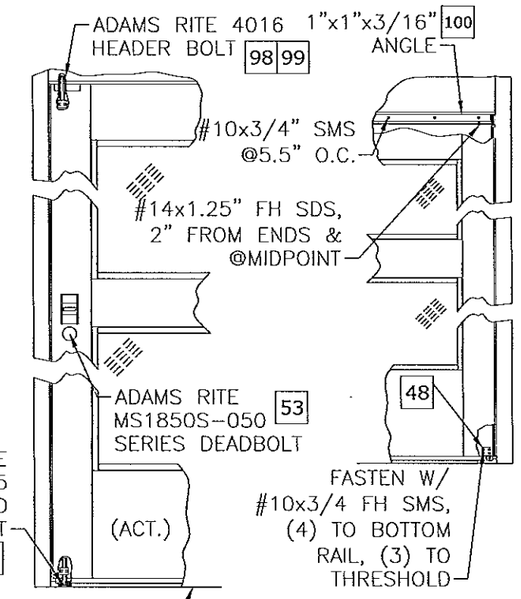

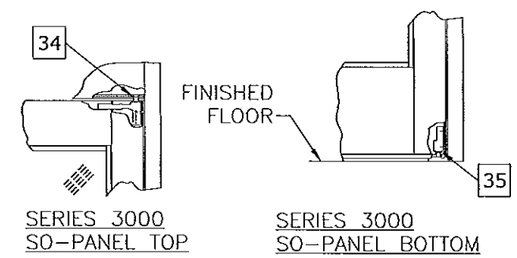

Approved as complying with the Florida Building Code
Date 4/4/13
NOA# 12-0802.03
Miami Dade Product Control
By

NOTES
1. TYPICAL DOOR SHOWN. STILE, RAIL AND MUNTIN OPTIONS AVAILABLE AS INDICATED.
2. HORIZONTAL MUNTIN BAR NOT REQUIRED AS INDICATED BY DASHED LINES. MAX DLO: 47 1/4" W X 76" H AS SHOWN
3. 3-POINT LOCKING STANDARD.
4. PRODUCT SHALL BE MANUFACTURED AND INSTALLED IN ACCORDANCE WITH PRODUCT APPROVALS.
5. SEE SHEETS 5 THROUGH 8 FOR REQUIRED ANCHORAGE.

FRANK L. BENNARDO
FRANK L. BENNARDO, P.E.
LICENSE NO. 46549
STATE OF FLORIDA
PROFESSIONAL ENGINEER
ENGINEER EXPRESS
160 SW 12th AVENUE, #B
DEERFIELD BEACH, FL 33442
Ph: (954) 354-0660 Fax: (954) 354-0443
WWW.ENGEXP.COM
CERT OF AUTH #9885
A. FRANK L. BENNARDO, P.E., INC. INNOVATIONS

STANLEY
ACCESS TECHNOLOGIES
65 SCOTT SWAMP ROAD, FARMINGTON, CT 06032
SERIES "DURA-STORM 2000/3000" AUTO SGD
BI-PARTING/SINGLE SLIDE (LMI)
MIAMI-DADE NOTICE OF ACCEPTANCE

REMARKS	DRWN	CHKD	DATE
INIT ISSUE	KL	FLB	07/01/12
REVIEWER COMMENT	KL	FLB	11/26/12
ADD'L COMMENTS	KL	FLB	01/28/13
ADD'L COMMENTS	KL	FLB	03/22/13
ADD'L COMMENTS	KL	FLB	04/01/13

12-SAT-13
SCALE: - 04
PAGE DESCRIPTION:
-
-
12
4

F:\01 Project Files\Stanley (SAT)\2012\12-SAT-13 Dura-Storm 2K-3K LMI NOA\12-SAT-13_04a Dura-Storm 2K-3K LMI NOA-LWH2.dwg
04/01/2013 - 2:05pm keithl

DURA-STORM SERIES 2000/3000 HEADER ANCHORING

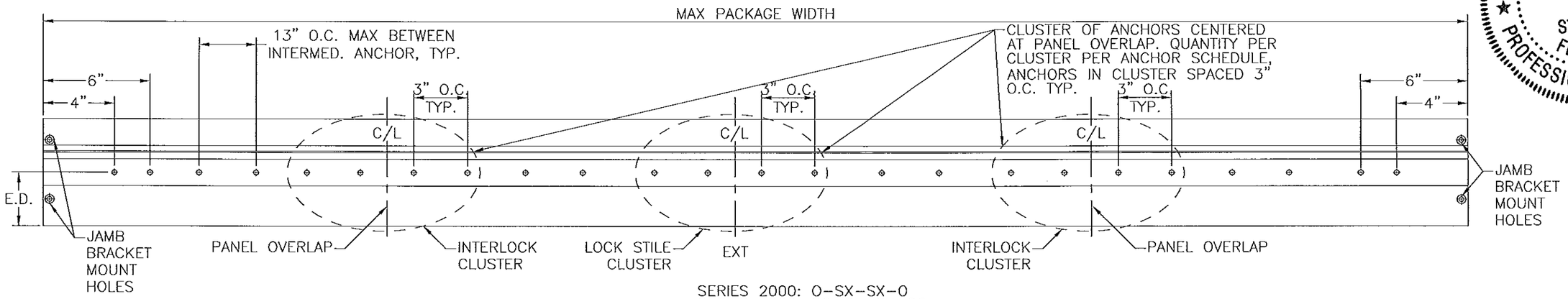

SERIES 2000: O–SX–SX–O
SERIES 3000: SO–SX–SX–SO

HEADER ANCHORING

N.T.S. BI–PARTING

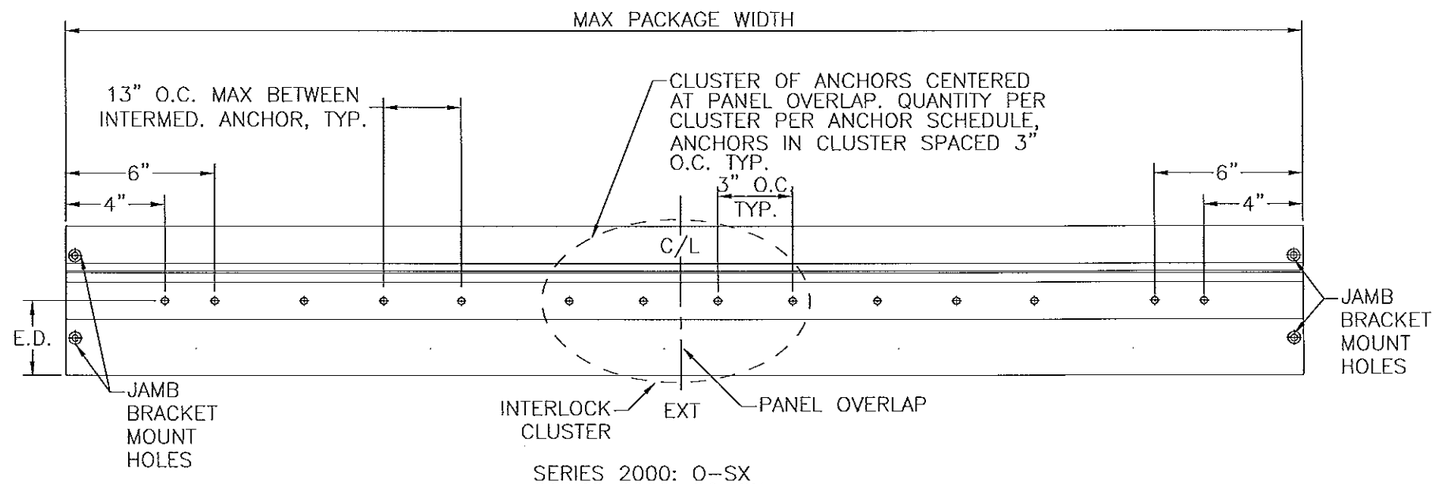

SERIES 2000: O–SX
SERIES 3000: SO–SX

HEADER ANCHORING

N.T.S. SINGLE SLIDE

Approved as complying with the Florida Building Code
Date 4/4/13
NOA# 12-0807.03
Miami Dade Product Control
By

SEE JAMB ANCHORS SHEETS 6 THROUGH 8, AND THRESHOLD ANCHORS SHEET 8. THRESHOLD ANCHORS APPLICABLE ONLY TO 3KSI CONCRETE.

ANCHOR SCHEDULE

HOST STRUCTURE	ANCHOR	EMBEDMENT	EDGE DISTANCE	NUMBER OF ANCHORS PER INTERLOCK/LOCK STILE CLUSTER				MAX INTERMEDIATE ANCHOR SPACING ALONG HEAD & THRESHOLD	MAX ANCHOR SPACING ALONG JAMBS
				HEAD		THRESHOLD			
				SINGLE SLIDE	BI-PART	SINGLE SLIDE	BI-PART		
3KSI MIN. CONCRETE	1/4" POWERS/RAWL PERMASEAL TAPPER	1-1/2"	3"	4	4	6	6	13" O.C. MAX	17-5/8" O.C. MAX
3/16" MIN. A36 STEEL	1/4-20 SAE GR. 5 SMS	FULL THREAD ENGAGEMENT	1/2"	4	4	N/A	N/A	13" O.C. MAX	17-5/8" O.C. MAX
G=0.55 MIN. WOOD	#14 WOOD SCREW	2"	3/4"	4	4	N/A	N/A	13" O.C. MAX	17-5/8" O.C. MAX
1/8" MIN. 6063-T5 ALUM.	#14 SAE GR. 5 SDS	FULL THREAD ENGAGEMENT	1/2"	4	4	N/A	N/A	13" O.C. MAX	17-5/8" O.C. MAX

FRANK L. BENNARDO, P.E.
LICENSE No. 46549
STATE OF FLORIDA
PROFESSIONAL ENGINEER
04/01/2013
ENGINEERING EXPRESS, INC.
160 SW 12th AVENUE, DEERFIELD BEACH, FL 33442
Ph: (954) 354-0660 Fax: (954) 354-0445
WWW.ENGEXP.COM
CERT OF AUTH #9885
A FRANK L. BENNARDO, P.E., INC. INNOVATION

STANLEY ACCESS TECHNOLOGIES
65 SCOTT SWAMP ROAD, FARMINGTON, CT 06032

SERIES "DURA-STORM 2000/3000" AUTO SGD
BI-PARTING/SINGLE SLIDE (LMI)
MIAMI-DADE NOTICE OF ACCEPTANCE

REMARKS	DRWN	CHKD	DATE
INIT ISSUE	KL	FLB	07/01/12
REVIEWER COMMENT	KL	FLB	11/26/12
ADD'L COMMENTS	KL	FLB	01/28/13
ADD'L COMMENTS	KL	FLB	03/22/13
ADD'L COMMENTS	KL	FLB	04/01/13

12-SAT-13
SCALE: - 04
PAGE DESCRIPTION:
-
-

12

5

04/01/2013 - 2:05pm keithl F:\01 Project Files\Stanley (SAT)\2012\12-SAT-13 Dura-Storm 2K-3K LMI NOA\12-SAT-13_04a Dura-Storm 2K-3K LMI NOA-LWH2.dwg

DURA-STORM SERIES 2000 SECTIONS & ANCHORING, STANDARD 5-PT LOCKS

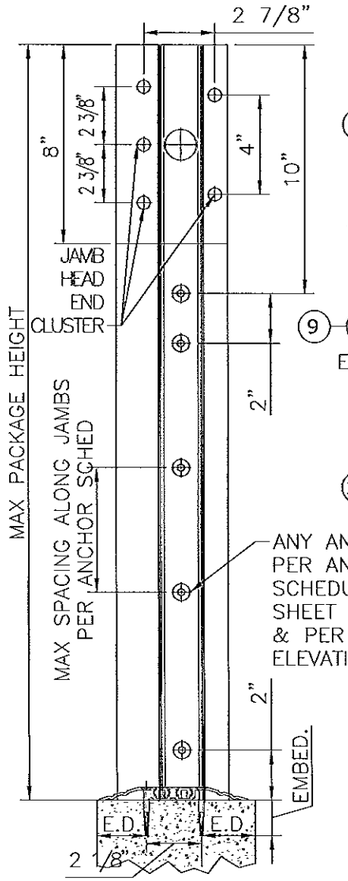

FRAME ANCHORING
N.T.S.

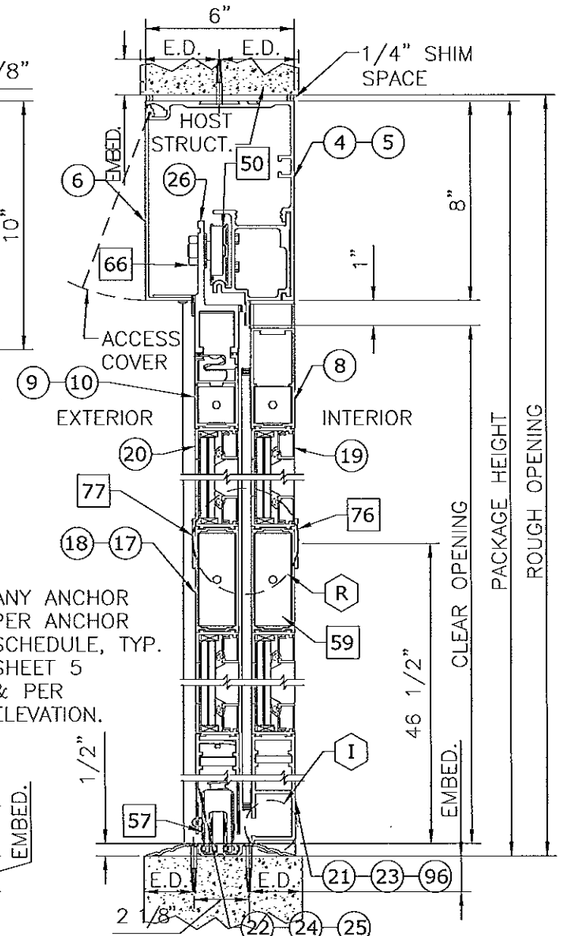

1 VERTICAL SECTION
2"=1'-0"

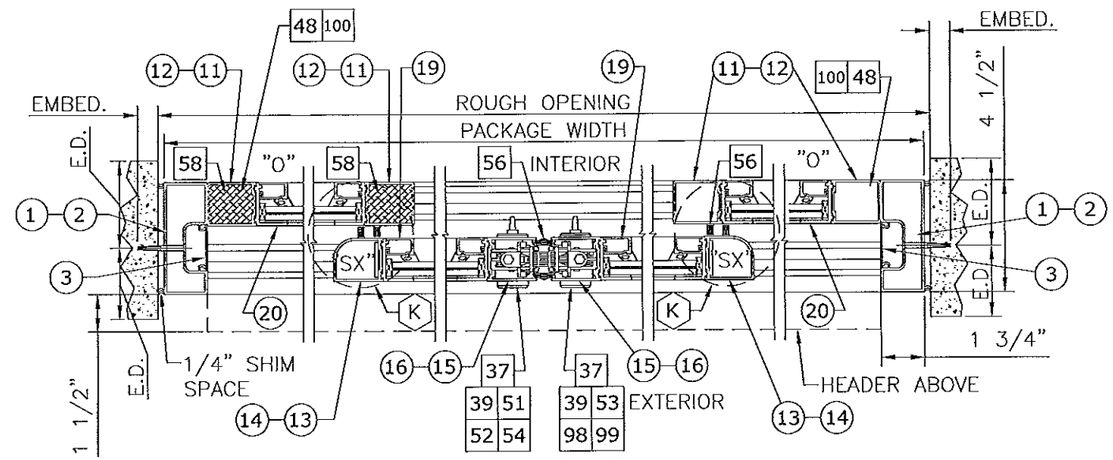

2 HORIZONTAL SECTION
2"=1'-0" BI-PARTING

(XX) : EXTRUSION
(XX)(XX) : EXTRUSION, MULTI-PIECE
(XX)-(XX) : EXTRUSION, OPTION
[XX] : PART
[XX][XX] : PART, MULTI-PIECE
[XX]-[XX] : PART, OPTION
(XX) : DETAIL
(XX)-(XX) : DETAIL, OPTION

SEE HEAD ANCHORS SHEET 5, AND THRESHOLD ANCHORS SHEET 8. THRESHOLD ANCHORS APPLICABLE ONLY TO 3KSI CONCRETE.

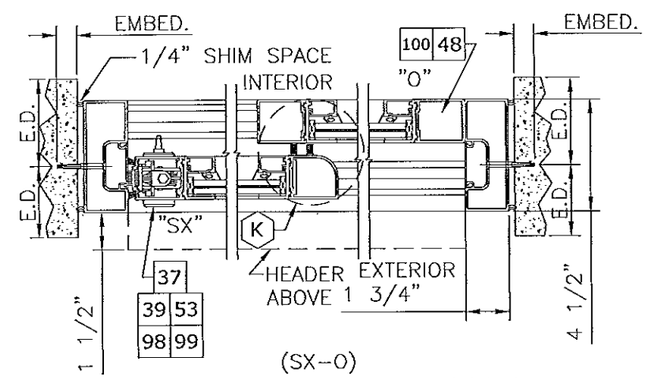

3 HORIZONTAL SECTION
2"=1'-0" SINGLE SLIDE

NOTE: SEE SHEET 5 FOR ANCHOR SCHEDULE AND ALLOWABLE ANCHOR TYPES

Approved as complying with the Florida Building Code
Date 4/4/13
NOA# 12-0807.03
Miami Dade Product Control
By

FRANK L. BENNARDO, P.E.
LICENSE No. 46549
STATE OF FLORIDA
PROFESSIONAL ENGINEER
04/01/2013

ENGINEERING EXPRESS
160 SW 12th AVENUE, #106
DEERFIELD BEACH, FL 33442
PH: (954) 354-0660 FAX: (954) 354-0443
WWW.ENGEXP.COM
CERT OF AUTH #6685
A. FRANK L. BENNARDO, P.E., INC. INNOVATION

STANLEY
ACCESS TECHNOLOGIES
65 SCOTT SWAMP ROAD, FARMINGTON, CT 06032

SERIES "DURA-STORM 2000/3000" AUTO SGD
BI-PARTING/SINGLE SLIDE (LMI)
MIAMI-DADE NOTICE OF ACCEPTANCE

REMARKS	DRWN	CHKD	DATE
INIT ISSUE	KL	FLB	07/01/12
REVIEWER COMMENT	KL	FLB	11/28/12
ADD'L COMMENTS	KL	FLB	01/28/13
ADD'L COMMENTS	KL	FLB	03/22/13
ADD'L COMMENTS	KL	FLB	04/01/13

12-SAT-13
SCALE: - 04
PAGE DESCRIPTION:
-
-
12
6

F:\01 Project Files\Stanley (SAT)\2012\12-SAT-13 Dura-Storm 2K-3K LMI NOA\12-SAT-13_04a Dura-Storm 2K-3K LMI NOA-LWH2.dwg
04/01/2013 - 2:05pm keithl

DURA-STORM SERIES 3000 SECTIONS & ANCHORING, STANDARD 5-PT LOCKS

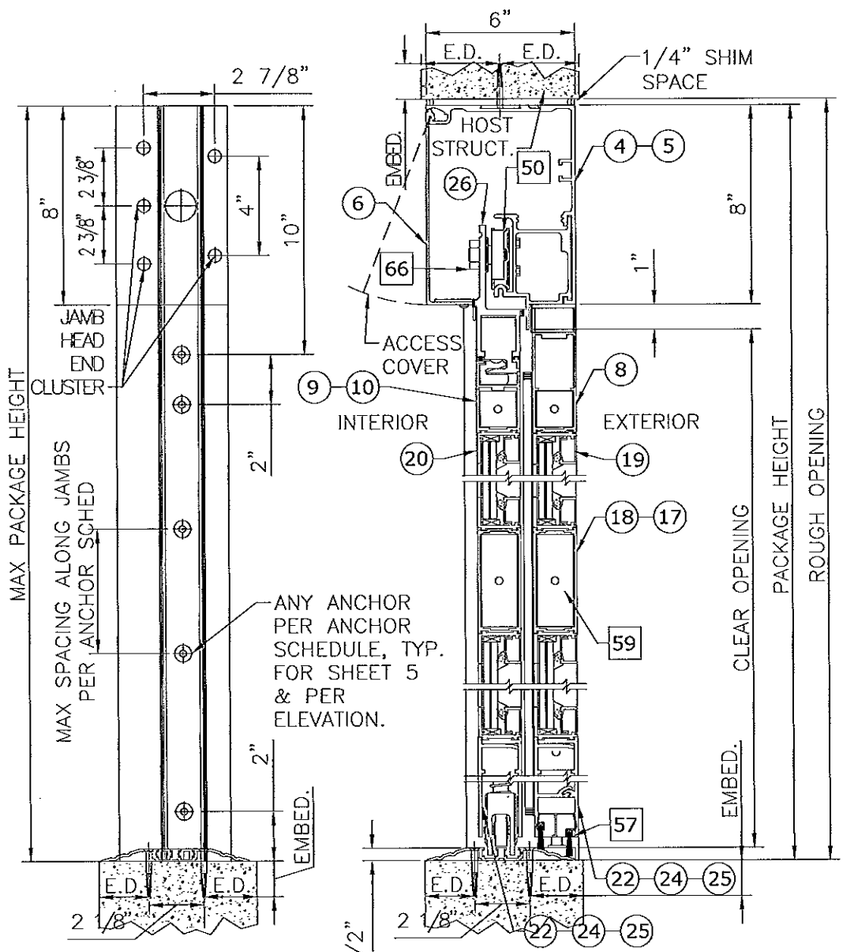

FRAME ANCHORING
N.T.S.

④ VERTICAL SECTION
2"=1'-0"

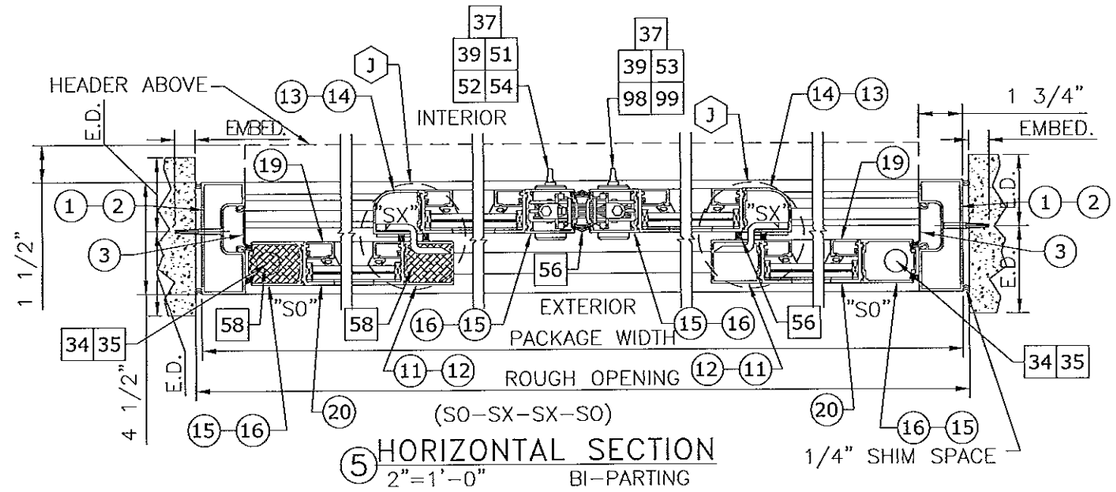

⑤ HORIZONTAL SECTION
2"=1'-0"
BI-PARTING

(XX) : EXTRUSION

(XX)(XX) : EXTRUSION, MULTI-PIECE

(XX)-(XX) : EXTRUSION, OPTION

[XX] : PART

[XX][XX] : PART, MULTI-PIECE

[XX]-[XX] : PART, OPTION

⟨XX⟩ : DETAIL

⟨XX⟩-⟨XX⟩ : DETAIL, OPTION

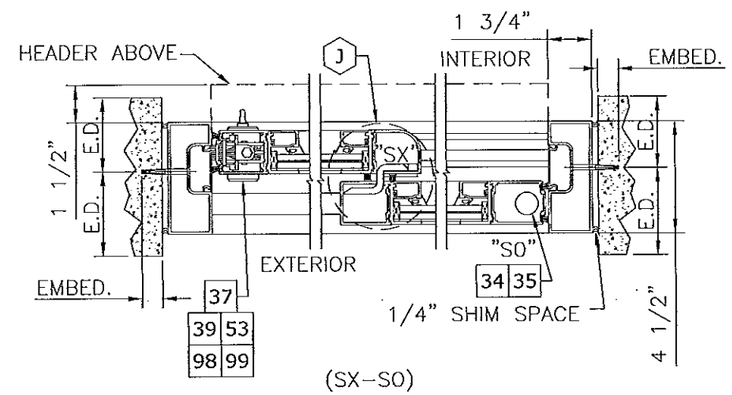

⑥ HORIZONTAL SECTION
2"=1'-0"
SINGLE SLIDE

SEE HEAD ANCHORS SHEET 5, AND THRESHOLD ANCHORS SHEET 8. THRESHOLD ANCHORS APPLICABLE ONLY TO 3KSI CONCRETE.

NOTE: SEE SHEET 5 FOR ANCHOR SCHEDULE AND ALLOWABLE ANCHOR TYPES

Approved as complying with the Florida Building Code
Date 4/4/13
NOA# 12-0807.05
Miami Dade Product Control
By Sheng L. Chang

FRANK L. BENNARDO, P.E.
#0020046549
FRANK L. BENNARDO LICENSE No. 46549 STATE OF FLORIDA PROFESSIONAL ENGINEER
04/01/2013

ENGINEERING EXPRESS®
160 SW 12th AVENUE, #106
DEERFIELD BEACH, FL 33442
Ph: (954) 354-0660 Fax: (954) 354-0443
WWW.ENGEXP.COM
CERT OF AUTH #8885
A FRANK L. BENNARDO, P.E., INC. INNOVATION

STANLEY
ACCESS TECHNOLOGIES
65 SCOTT SWAMP ROAD, FARMINGTON, CT 06032

SERIES "DURA-STORM 2000/3000" AUTO SGD
BI-PARTING/SINGLE SLIDE (LMI)
MIAMI-DADE NOTICE OF ACCEPTANCE

REMARKS	DRWN	CHKD	DATE
INIT ISSUE	KL	FLB	07/01/12
REVIEWER COMMENT	KL	FLB	11/28/12
ADD'L COMMENTS	KL	FLB	01/28/13
ADD'L COMMENTS	KL	FLB	03/22/13
ADD'L COMMENTS	KL	FLB	04/01/13

12-SAT-13

SCALE: - 04

PAGE DESCRIPTION:
-
-

7 / 12

04/01/2013 - 2:05pm keithl F:\01 Project Files\Stanley (SAT)\2012\12-SAT-13 Dura-Storm 2K-3K LMI NOA\12-SAT-13_04a Dura-Storm 2K-3K LMI NOA-LWH2.dwg

DURA-STORM SERIES 2000/3000 THRESHOLDS & ANCHORING

NOTE: USE CONCRETE ANCHOR PER ANCHOR SCHEDULE FOR ALL THRESHOLD ANCHORAGE DETAILS SHOWN HEREIN. SEE SHEET 5 FOR ANCHOR SCHEDULE AND ALLOWABLE CONCRETE ANCHOR TYPES

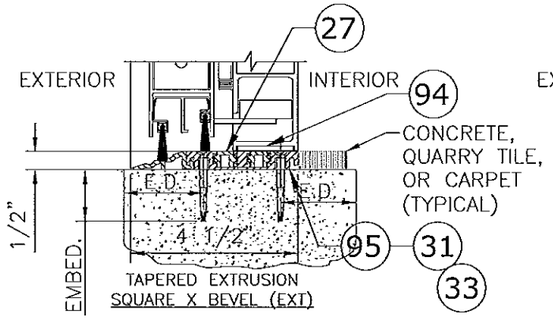

THRESHOLD–TAPERED EXT
3"=1'–0" 2000

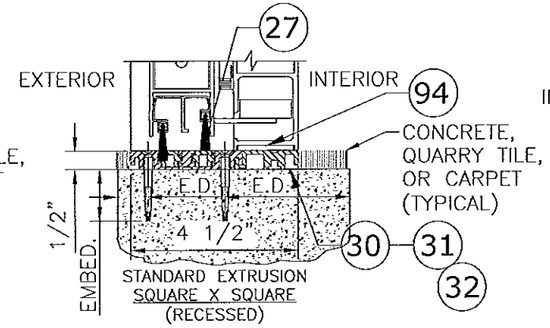

THRESHOLD–SQUARE
3"=1'–0" 2000

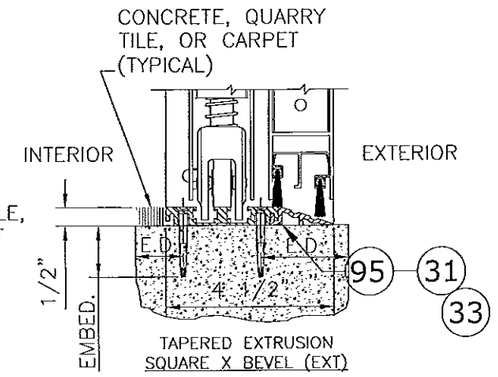

THRESHOLD–TAPERED EXT
3"=1'–0" 3000

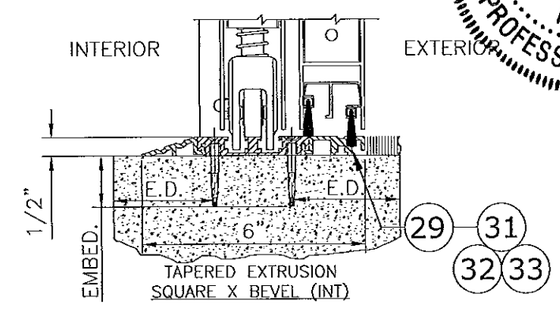

THRESHOLD–TAPERED INT
3"=1'–0" 3000

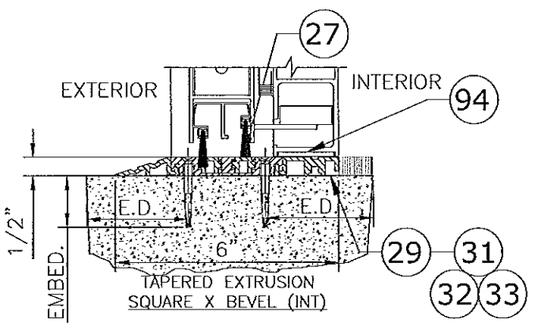

THRESHOLD–TAPERED INT
3"=1'–0" 2000

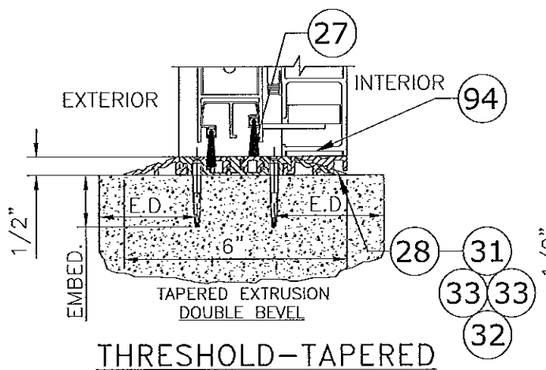

THRESHOLD–TAPERED
3"=1'–0" 2000

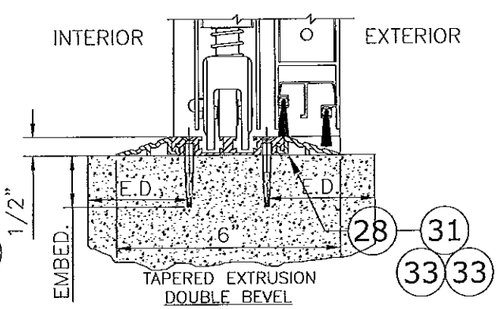

THRESHOLD–TAPERED
3"=1'–0" 3000

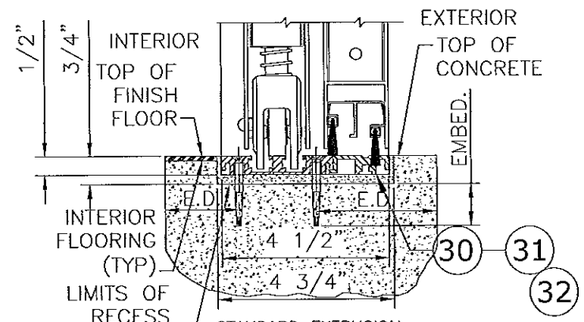

THRESHOLD–SQUARE
3"=1'–0" 3000

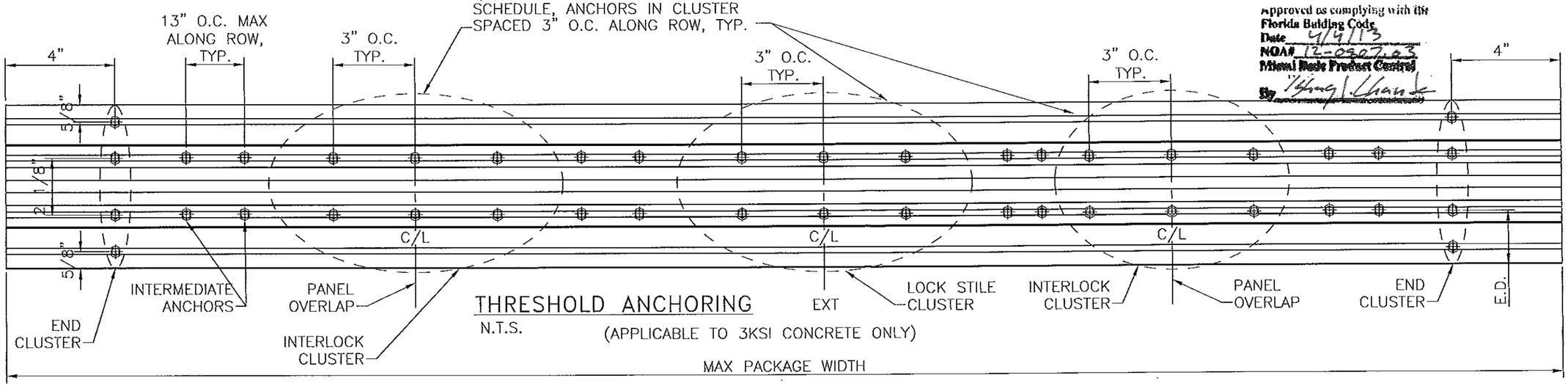

THRESHOLD ANCHORING
N.T.S.
(APPLICABLE TO 3KSI CONCRETE ONLY)

Approved as complying with the Florida Building Code
Date 4/9/13
NOA# 12-0507.03
Miami Dade Product Control
By

FRANK L. BENNARDO, P.E.
CE046549
FRANK L. BENNARDO LICENSE No. 46549 STATE OF FLORIDA PROFESSIONAL ENGINEER
04/01/2013

ENGINEERING EXPRESS
160 SW 12th AVENUE, #106
DEERFIELD BEACH, FL 33442
PH: (954) 354-0660 FAX: (954) 354-0443
WWW.ENGEXP.COM
CERT OF AUTH #9885
A. FRANK L. BENNARDO, P.E., INC. INNOVATION

STANLEY
ACCESS TECHNOLOGIES
65 SCOTT SWAMP ROAD, FARMINGTON, CT 06032

SERIES "DURA-STORM 2000/3000" AUTO SGD
BI-PARTING/SINGLE SLIDE (LMI)
MIAMI-DADE NOTICE OF ACCEPTANCE

REMARKS	DRWN	CHKD	DATE
INIT ISSUE	KL	FLB	07/01/12
REVIEWER COMMENT	KL	FLB	11/26/12
ADD'L COMMENTS	KL	FLB	01/28/13
ADD'L COMMENTS	KL	FLB	03/22/13
ADD'L COMMENTS	KL	FLB	04/01/13

12-SAT-13
SCALE: - 04
PAGE DESCRIPTION:

04/01/2013 - 2:05pm keithl F:\01 Project Files\Stanley (SAT)\2012\12-SAT-13 Dura-Storm 2K-3K LMI NOA\12-SAT-13_04a Dura-Storm 2K-3K LMI NOA-LWH2.dwg

DURA-STORM SERIES 2000/3000 EXTRUSIONS

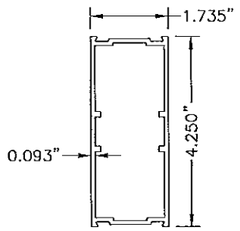

18 MUNTIN BAR
N.T.S. 6063-T6

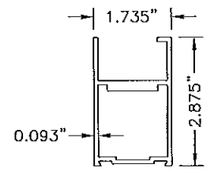

9 TOP RAIL, SX (NARROW)
N.T.S. 6063-T6

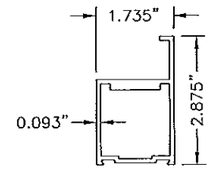

10 TOP RAIL, SX (NARROW)
N.T.S. 6063-T6

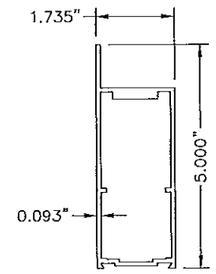

7 TOP RAIL, O & SO (MEDIUM)
N.T.S. 6063-T6

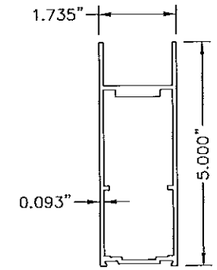

8 TOP RAIL, O & SO (MEDIUM)
N.T.S. 6063-T6

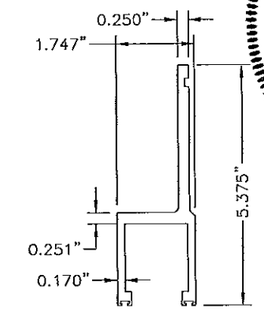

26 HANGER
N.T.S. 6063-T6

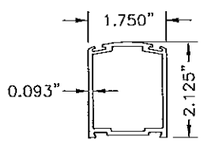

15 STILE LEAD (NARROW)
N.T.S. 6063-T6

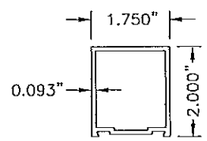

11 STILE FIXED (NARROW)
N.T.S. 6063-T6

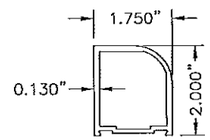

13 STILE PIVOT (NARROW)
N.T.S. 6063-T6

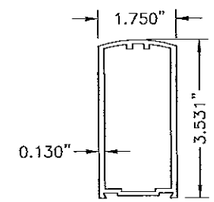

12 STILE LEAD (MEDIUM)
N.T.S. 6063-T6

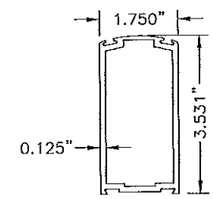

16 STILE LOCK (MEDIUM)
N.T.S. 6063-T6

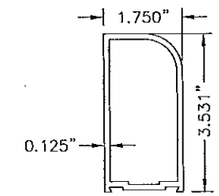

14 STILE PIVOT (MEDIUM)
N.T.S. 6063-T6

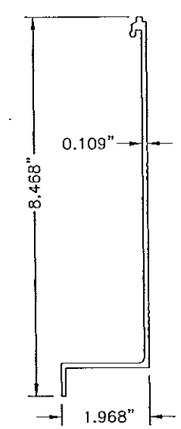

6 HEADER COVER
N.T.S. 6063-T6

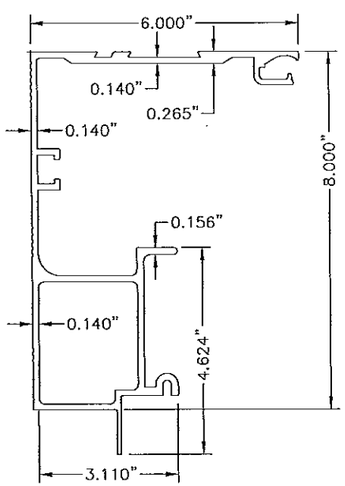

4 HEADER
N.T.S. 6063-T6

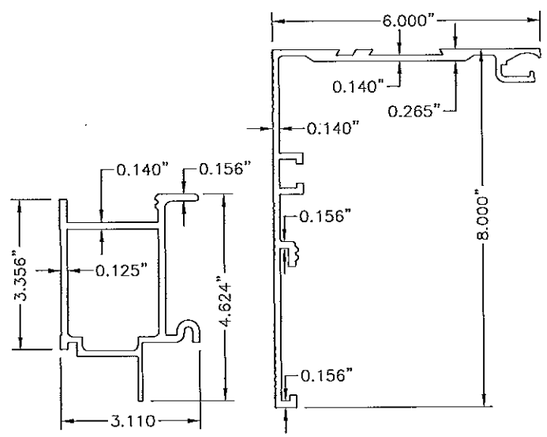

5 HEADER (2 PC.)
N.T.S. 6063-T6

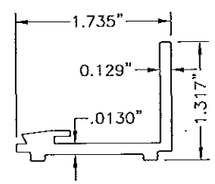

20 GUTTER
N.T.S. 6063-T6

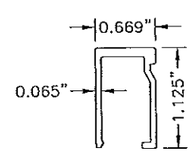

19 GLASS STOP
N.T.S. 6063-T6

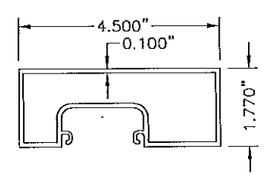

1 JAMB 4 1/2
N.T.S. 6063-T6

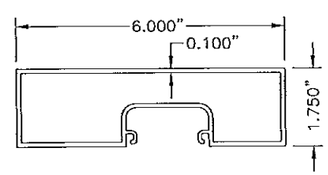

2 JAMB 6
N.T.S. 6063-T6

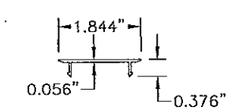

3 JAMB INSERT
N.T.S. 6063-T6

Approved as complying with the Florida Building Code
Date 4/4/13
NOA# 12-0807.03
Miami Dade Product Control
By

FRANK L. BENNARDO, P.E.
FL LIC. #46549
FRANK L. BENNARDO LICENSE No. 46549 STATE OF FLORIDA PROFESSIONAL ENGINEER
04/01/2013
ENGINEERING EXPRESS®
160 SW 12th AVENUE, #106
DEERFIELD BEACH, FL 33442
PH: (954) 354-0660 FAX: (954) 354-0443
WWW.ENGEXP.COM
CERT OF AUTH #9885
A. FRANK L. BENNARDO, P.E., INC. INNOVATION

STANLEY
ACCESS TECHNOLOGIES
65 SCOTT SWAMP ROAD, FARMINGTON, CT 06032

SERIES "DURA-STORM 2000/3000" AUTO SGD
BI-PARTING/SINGLE SLIDE (LMI)
MIAMI-DADE NOTICE OF ACCEPTANCE

REMARKS	DRWN	CHKD	DATE
INIT ISSUE	KL	FLB	07/01/12
REVIEWER COMMENT	KL	FLB	11/26/12
ADD'L COMMENTS	KL	FLB	01/28/13
ADD'L COMMENTS	KL	FLB	03/22/13
ADD'L COMMENTS	KL	FLB	04/01/13

12-SAT-13
SCALE: - 04
PAGE DESCRIPTION:
-
-

12

9

F:\01 Project Files\Stanley (SAT)\2012\12-SAT-13 Dura-Storm 2K-3K LMI NOA\12-SAT-13_04a Dura-Storm 2K-3K LMI NOA-LWH2.dwg
04/01/2013 - 2:05pm keithl

DURA-STORM SERIES 2000/3000 EXTRUSIONS

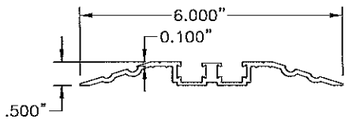

28 ALT THRESHOLD
N.T.S. 6063-T6

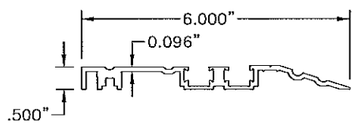

29 ALT THRESHOLD
N.T.S. 6063-T6

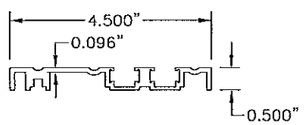

30 THRESHOLD
N.T.S. 6063-T6

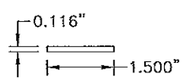

94 KEY STRIP
N.T.S. 6063-T6

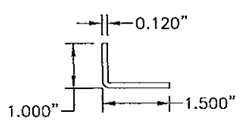

48 BRACKET
N.T.S. 6063-T6

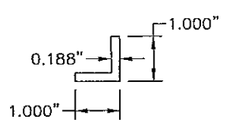

100 ANGLE
N.T.S. 6063-T6

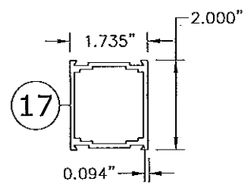

MUNTIN BAR
N.T.S. 6063-T6

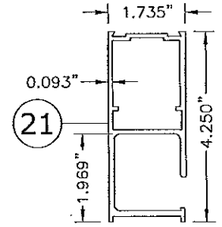

BOTTOM RAIL, O
N.T.S. 6063-T6

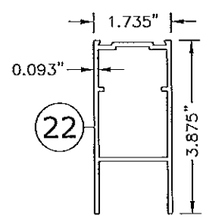

BOTTOM RAIL, SX/SO
N.T.S. 6063-T6

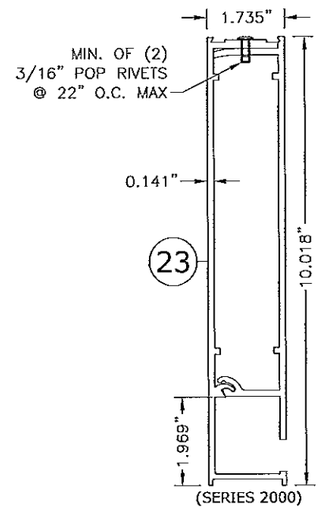

BOTTOM RAIL, O
N.T.S. 2-PIECE 6063-T6

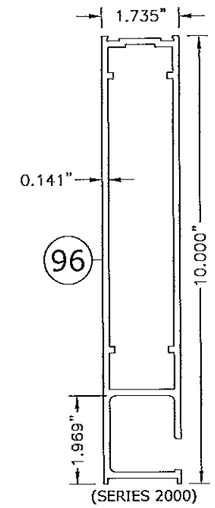

BOTTOM RAIL, O
N.T.S. 1-PIECE 6063-T6

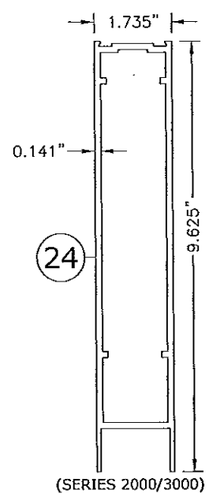

BOTTOM RAIL, SX/SO
N.T.S. 1-PIECE 6063-T6

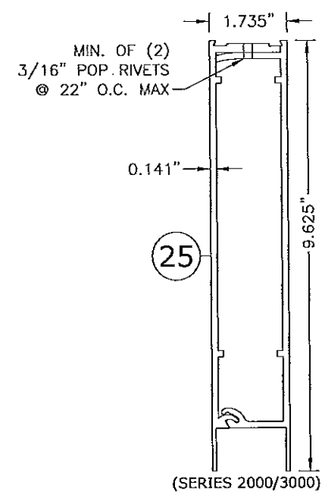

BOTTOM RAIL, SX/SO
N.T.S. 2-PIECE 6063-T6

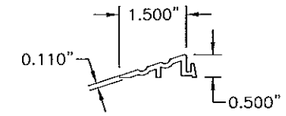

33 COMPONENT THRESHOLD
N.T.S. 6063-T6

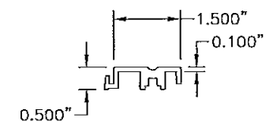

32 COMPONENT THRESHOLD
N.T.S. 6063-T6

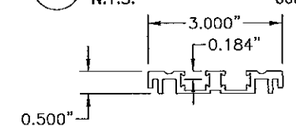

31 COMPONENT THRESHOLD
N.T.S. 6063-T6

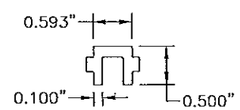

27 THRESHOLD FILLER
N.T.S. 6063-T6

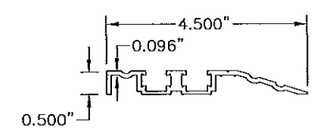

95 COMPONENT THRESHOLD
N.T.S. 6063-T6

Approved as complying with the Florida Building Code
Date APRIL 04, 2013
NOA# 12-0907.03
Miami Dade Product Control
By Libny I. Chamba

FRANK L. BENNARDO, P.E.
LICENSE No. 46549
STATE OF FLORIDA
PROFESSIONAL ENGINEER
04/01/2013

ENGINEERING EXPRESS
160 SW 12th AVENUE, #106
DEERFIELD BEACH, FL 33442
Ph: (954) 354-0660 Fax: (954) 354-0443
WWW.ENGEXP.COM
CERT OF AUTH #9885
A FRANK L. BENNARDO, P.E., INC. INNOVATION

STANLEY
ACCESS TECHNOLOGIES
65 SCOTT SWAMP ROAD, FARMINGTON, CT 06032

SERIES "DURA-STORM 2000/3000" AUTO SGD
BI-PARTING/SINGLE SLIDE (LMI)
MIAMI-DADE NOTICE OF ACCEPTANCE

REMARKS	DRWN	CHKD	DATE
INIT ISSUE	KL	FLB	07/01/12
REVIEWER COMMENT	KL	FLB	11/28/12
ADDL COMMENTS	KL	FLB	01/28/13
ADDL COMMENTS	KL	FLB	03/22/13
ADDL COMMENTS	KL	FLB	04/01/13

12-SAT-13
SCALE: - 04
PAGE DESCRIPTION:
-
-

12
10

F:\01 Project Files\Stanley (SAT)\2012\12-SAT-13 Dura-Storm 2K-3K LMI NOA\12-SAT-13_04a Dura-Storm 2K-3K LMI NOA-LWH2.dwg
04/01/2013 - 2:05pm keith

DURA-STORM SERIES 2000/3000 DETAILS

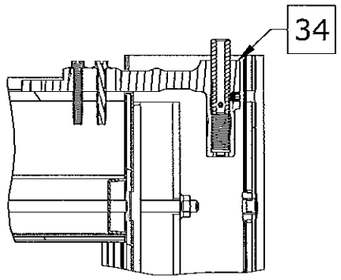

A SO PIVOT TOP
NTS SERIES 3000

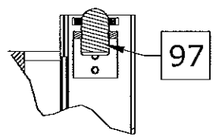

P SO PANEL BALL DETENT TOP
NTS SERIES 3000

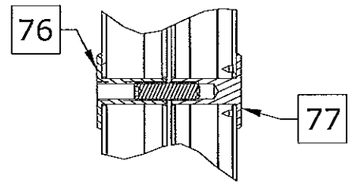

R SX/O WIND CLIP
NTS SERIES 2000

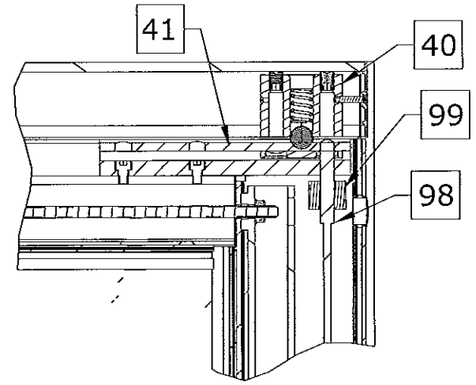

F STD BOLT TOP
NTS SERIES 2000/3000

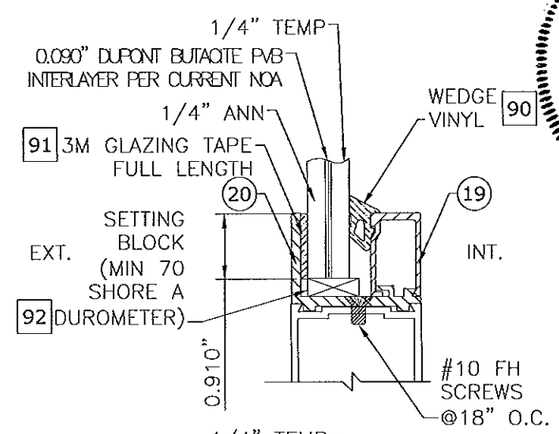

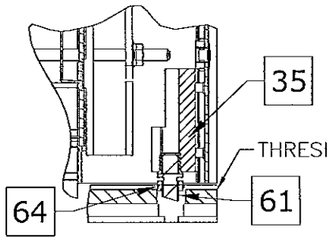

B SO PIVOT BOTTOM
NTS SERIES 3000

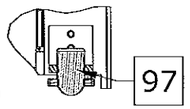

Q SO PANEL BALL DETENT BOTTOM
NTS SERIES 3000

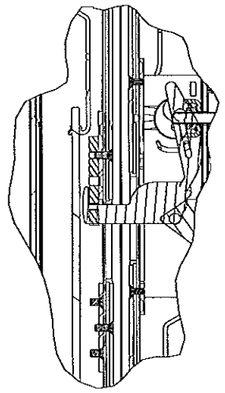

N LATCH DETAIL
NTS SERIES 2000/3000

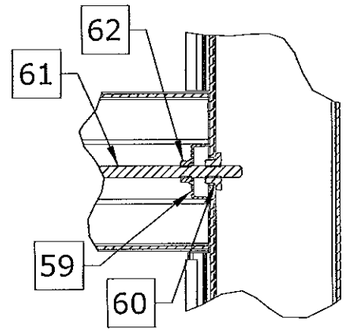

M MUNTIN DETAIL
NTS SERIES 2000/3000

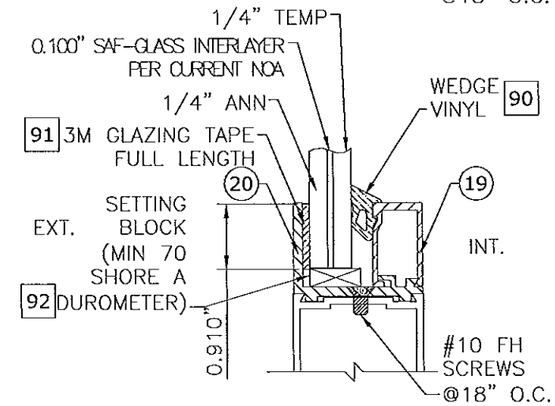

9/16" LAMINATED GLAZING DETAILS
NTS

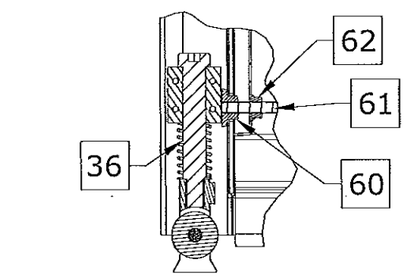

C SX GUIDE/PIVOT BOTTOM
NTS SERIES 3000

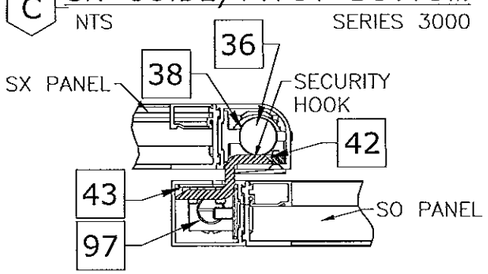

J SECURITY HOOK
NTS SERIES 3000
(SX–SO INTERLOCK)

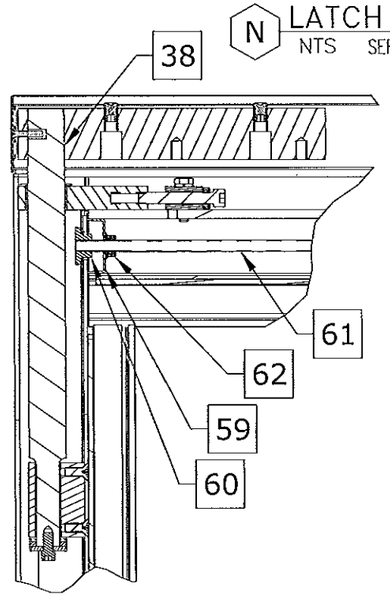

D SX PIVOT TOP
NTS SERIES 2000/3000

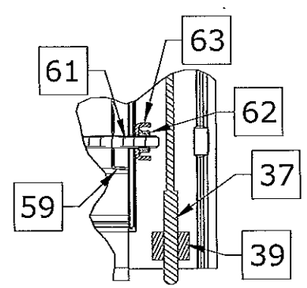

E STD BOLT BOTTOM
NTS SERIES 2000/3000

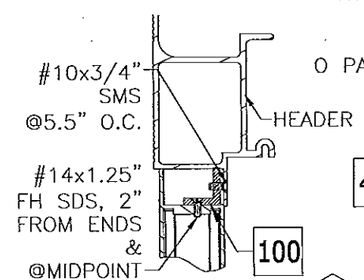

O O PANEL ANGLE
NTS SERIES 2000

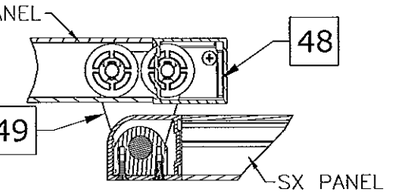

K SX GUIDE/PIVOT BOTTOM
NTS SERIES 2000
(O–SX INTERLOCK)

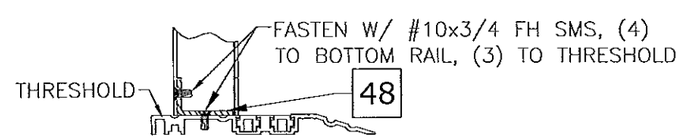

I O–PANEL BRACKET
NTS SERIES 2000

FRANK L. BENNARDO
LICENSE
No. 46549
STATE OF FLORIDA
PROFESSIONAL ENGINEER
FRANK L. BENNARDO, P.E.
FL LIC. #46549
04/01/2013

ENGINEERING EXPRESS
160 SW 12th AVENUE, #106
DEERFIELD BEACH, FL 33442
Ph: (954) 354-0660 Fax: (954) 354-0443
WWW.ENGEXP.COM
CERT OF AUTH #3885
A FRANK L. BENNARDO, P.E., INC. INNOVATION

STANLEY
ACCESS TECHNOLOGIES
65 SCOTT SWAMP ROAD, FARMINGTON, CT 06032

SERIES "DURA-STORM 2000/3000" AUTO SGD
BI-PARTING/SINGLE SLIDE (LMI)
MIAMI-DADE NOTICE OF ACCEPTANCE

REMARKS	DRWN	CHKD	DATE
INIT ISSUE	KL	FLB	07/01/12
REVIEWER COMMENT	KL	FLB	11/28/12
ADD'L COMMENTS	KL	FLB	01/28/13
ADD'L COMMENTS	KL	FLB	03/22/13
ADD'L COMMENTS	KL	FLB	04/01/13

12-SAT-13
SCALE: - 04
PAGE DESCRIPTION:
-
-

12

11

F:\01 Project Files\Stanley (SAT)\2012\12-SAT-13 Dura-Storm 2K-3K LMI NOA\12-SAT-13_04a Dura-Storm 2K-3K LMI NOA-LWH2.dwg
04/01/2013 - 2:05pm keithl

DURA-STORM SERIES 2000/3000 BILL OF MATERIALS

BILL OF MATERIALS	
REFERENCE	DESCRIPTION
1	Extrusion - Jamb - 4 1/2"
2	Extrusion - Jamb - 6"
3	Extrusion - Jamb - Insert
4	Extrusion - Header - 1 PC
5	Extrusion - Header - 2 PC
6	Extrusion - Header Cover -
7	Extrusion - Top Rail - O, SO
8	Extrusion - Top Rail - O, SO
9	Extrusion - Top Rail - SX
10	Extrusion - Top Rail - SX
11	Extrusion - Stile - Fixed
12	Extrusion - Stile - Lead
13	Extrusion - Stile - Pivot
14	Extrusion - Stile - Pivot
15	Extrusion - Stile - Lead
16	Extrusion - Stile - Lock
17	Extrusion - Muntin Bar - 2"
18	Extrusion - Muntin Bar - 4.25"
19	Extrusion - Glass Stop -
20	Extrusion - Glass Gutter -
21	Extrusion - Bottom Rail O - 4"
22	Extrusion - Bottom Rail SO/SX4"
23	Extrusion - Bottom Rail O - 10" - 2 PC
24	Extrusion - Bottom Rail SX/SO - 1 PC - 10"
25	Extrusion - Bottom Rail SX/SO - 2 PC - 10"
26	Extrusion - Hanger -
27	Extrusion - Threshold - Filler
28	Extrusion - Threshold - Dbl bevel - 6"
29	Extrusion - Threshold - Sq/Bvl - 6"
30	Extrusion - Threshold - Recessed - 4.5"
31	Extrusion - Threshold - Core
32	Extrusion - Threshold - Square
33	Extrusion - Threshold - Bevel
34	Component - Top Pivot - SO - 3000
35	Component - Bottom Pivot - SO - 3000
36	Component - Bottom Guide - SX- 3000
37	Component - Throw Bolt - Std - Adams Rite 4015
38	Component - Top pivot - SX
39	Component - Guide - Throw Bolt - Adams Rite 4015

NON-CALL OUT PART #S FROM 67-89 ARE NOT PART OF BOM

BILL OF MATERIALS	
REFERENCE	DESCRIPTION
40	Component - Ball Detent - Std
41	Component - Detent Block - Std
42	Component - Security Hook - Std
43	Component - Backing Plate - Security Hook
46	Component - Ball Detent
47	Component - Detent Block
48	Component - Bracket - O Panel
49	Component - Bottom Guide - SX - 2000
50	Component - Load Wheel - Steel/Aluminum/Plastic
51	Component - 2-PT Lock - Cylinder - Adams Rite 1870 Flushbolt, to be used with A.R. 4015 bottom bolt.
52	Component - 2-PT Lock - Thumb Turn - Adams Rite 1870 Flushbolt, to be used with A.R. 4015 bottom bolt.
53	Component - 8 Ply Hookbolt Lock - Single Action - Adams Rite MS1850S-050 (Deadbolt), Used w/ Adams Rite 4015 and 4016 Bolts
54	Component - Exit Indicator -
56	Component - Pile - Adhesive/non Adhesive backed
57	Component - Brush - Sweep
58	Component - Foam Block -
59	Hardware - Tie Rod - Plate
60	Hardware - Tie Rod - Nut - 5/16-18 - Steel
61	Hardware - Threaded Rod - 5/16-18 - Steel
62	Hardware - 5/16 - 18 - Nut - Steel
63	Hardware - Tie Rod / Rail - Plate - Steel
64	Hardware - 7/16-20 Jamb Nut - Steel
65	Hardware - 7/16 SO Pivot Pin - Steel
66	Hardware - 5/8-11 Nut - Steel
74	Not applicable
76	Component - Lock Flange (Int) - "Wind Clip"
77	Component - Lock Flange (Ext) - "Wind Clip"
90	Glazing - Wedge Vinyl - RM270864 by Trelleborg
91	Glazing - 3M Tape -
92	Glazing - Setting Block -
94	Extrusion - Key Strip
95	Extrusion - Threshold - Sq/Bvl - 4.5"
96	Extrusion - Bottom Rail O - 10"
97	Component - Ball Detent - SO
98	Component - Throw Bolt - Std - Adams Rite 4016
99	Component - Guide - Throw Bolt - Adams Rite 4016
100	Extrusion - 1"x1"x3/16" Angle

FRANK L. BENNARDO, P.E.
#0E0046549
04/01/2013
FRANK L. BENNARDO LICENSE No. 46549 STATE OF FLORIDA PROFESSIONAL ENGINEER

ENGINEERING EXPRESS
160 SW 12th AVENUE, #106
DEERFIELD BEACH, FL 33442
Ph: (954) 354-0660 Fax: (954) 354-0443
WWW.ENGEXP.COM
CERT OF AUTH #9985
A FRANK L. BENNARDO, P.E., INC. INNOVATION

STANLEY
ACCESS TECHNOLOGIES
65 SCOTT SWAMP ROAD, FARMINGTON, CT 06032

SERIES "DURA-STORM 2000/3000" AUTO SGD
BI-PARTING/SINGLE SLIDE (LMI)
MIAMI-DADE NOTICE OF ACCEPTANCE

REMARKS	DRWN	CHKD	DATE
INIT ISSUE	KL	FLB	07/01/12
REVIEWER COMMENT	KL	FLB	11/26/12
ADD'L COMMENTS	KL	FLB	01/28/13
ADD'L COMMENTS	KL	FLB	03/22/13
ADD'L COMMENTS	KL	FLB	04/01/13

12-SAT-13
SCALE: - 04
PAGE DESCRIPTION:
-
-

12 / 12

04/01/2013 - 2:05pm keithl F:\01 Project Files\Stanley (SAT)\2012\12-SAT-13 Dura-Storm 2K-3K LMI NOA\12-SAT-13_04a Dura-Storm 2K-3K LMI NOA-LWH2.dwg