MIAMI-DADE COUNTY
DEPARTMENT OF REGULATORY AND ECONOMIC RESOURCES (RER)
BOARD AND CODE ADMINISTRATION DIVISION

MIAMI-DADE COUNTY
PRODUCT CONTROL SECTION
11805 SW 26 Street, Room 208
Miami, Florida 33175-2474
T (786) 315-2590 F (786) 315-2599
www.miamidade.gov/economy

NOTICE OF ACCEPTANCE (NOA)

American Metal Fabrications, Inc.
dba AMF Building Products
9040 Belvedere Road
West Palm Beach, Florida 33411

SCOPE:
This NOA is being issued under the applicable rules and regulations governing the use of construction materials. The documentation submitted has been reviewed and accepted by Miami-Dade County RER- Product Control Section to be used in Miami Dade County and other areas where allowed by the Authority Having Jurisdiction (AHJ).

This NOA shall not be valid after the expiration date stated below. The Miami-Dade County Product Control Section (In Miami Dade County) and/or the AHJ (in areas other than Miami Dade County) reserve the right to have this product or material tested for quality assurance purposes. If this product or material fails to perform in the accepted manner, the manufacturer will incur the expense of such testing and the AHJ may immediately revoke, modify, or suspend the use of such product or material within their jurisdiction. RER reserves the right to revoke this acceptance, if it is determined by Miami-Dade County Product Control Section that this product or material fails to meet the requirements of the applicable building code.

This product is approved as described herein, and has been designed to comply with the High Velocity Hurricane Zone of the Florida Building Code.

DESCRIPTION: 0.063" (min.) Aluminum Storm Panels Shutter

APPROVAL DOCUMENT: Drawing No. 12-167, titled " 0.063" Aluminum Storm Panel ", sheets 1 through 5 of 5, prepared by Knezevich Associates Consulting Engineers, dated July 10, 2012, signed and sealed by V. J. Knezevich, P.E., on July 10, 2012, bearing the Miami-Dade County Product Control Revision stamp with the Notice of Acceptance number and the expiration date by the Miami-Dade County Product Control Section.

MISSILE IMPACT RATING: Large and Small Missile Impact Resistant

LABELING: Each panel shall bear a permanent label with the manufacturer's name or logo, city, state, the following statement: "Miami-Dade County Product Control Approved", and NOA number, per TAS-201, TAS-202, and TAS-203, unless otherwise noted herein.

RENEWAL of this NOA shall be considered after a renewal application has been filed and there has been no change in the applicable building code negatively affecting the performance of this product.

TERMINATION of this NOA will occur after the expiration date or if there has been a revision or change in the materials, use, and/or manufacture of the product or process. Misuse of this NOA as an endorsement of any product, for sales, advertising or any other purposes shall automatically terminate this NOA. Failure to comply with any section of this NOA shall be cause for termination and removal of NOA.

ADVERTISEMENT: The NOA number preceded by the words Miami-Dade County, Florida, and followed by the expiration date may be displayed in advertising literature. If any portion of the NOA is displayed, then it shall be done in its entirety.

INSPECTION: A copy of this entire NOA shall be provided to the user by the manufacturer or its distributors and shall be available for inspection at the job site at the request of the Building Official.
This NOA **revises NOA #12-0419.01** and consists of this page 1, evidence submitted pages E-1, E-2, & E-3 as well as approval document mentioned above.
The submitted documentation was reviewed by **Helmy A. Makar, P.E., M.S.**

MIAMI-DADE COUNTY APPROVED

Helmy A. Makar
12/13/2012

NOA No. 12-0809.04
Expiration Date: 04/18/2017
Approval Date: 12/13/2012

American Metal Fabrications, Inc.
dba AMF Building Products

NOTICE OF ACCEPTANCE: EVIDENCE SUBMITTED

1. EVIDENCE SUBMITTED UNDER PREVIOUS APPROVAL # 95-0717.06

A. DRAWINGS

1. *Drawing No. 96-47, Poma Corporation, .063" Aluminum Storm Panel Drawing, Sheet 1 through 3 of 3, prepared by Knezevich & Associates, Inc., dated 02/15/96, Revision No. 2, dated 03/25/96, signed and sealed by V.J. Knezevich, P.E.*

B. TESTS

1. *Test report on: 1) Large Missile Impact Test, 2) Cyclic Wind Pressure Test, 3) Uniform Static Air Pressure Test of 0.063" aluminum storm panels x 104" high, prepared by Construction Testing Corp., Report No. CTC-96-008, dated 02/16/96, signed and sealed by Christopher G. Tyson, P.E.*

C. MATERIAL CERTIFICATIONS

1. *Mill Certified Inspection Report, dated 11/27/95, for Aluminum Alloy 5052-H36 by Precision Coil Incorporated, with chemical composition and physical properties.*
2. *Tensile Test Reports from QC Metallurgical, Inc., QCM Job No. 6BM-410, dated February 16, 1996 for Aluminum sample.*

D. CALCULATIONS

1. *Storm panel anchor calculations, pages 1 through 10 of 10 , dated 02/28/96, prepared by Knezevich & Associates, signed and sealed by V.J. Knezevich, P.E.*

2. EVIDENCE SUBMITTED UNDER PREVIOUS APPROVAL # 99-0219.01

A. DRAWINGS

1. *None. (Drawings originally in file 95-0717.06.)*

B. TESTS

1. *None. (Tests originally in file 95-0717.06.)*

C. CALCULATIONS

1. *None. (Calculations originally in file 95-0717.06.)*

D. MATERIAL CERTIFICATIONS

1. *None. (Material certifications originally in file No. 95-0717.06.)*

E. OTHER

1. *Letter issued by Al Purino stating that all documents are unchanged copies of 0.063" Aluminum Storm Panel submittals, Acceptance No. 95-0717.06.*

Hemy A. Makar, P.E., M.S.
Product Control Unit Supervisor
NOA No. 12-0809.04
Expiration Date: 04/18/2017
Approval Date: 12/13/2012

NOTICE OF ACCEPTANCE: EVIDENCE SUBMITTED

3. EVIDENCE SUBMITTED UNDER PREVIOUS APPROVAL # 02-0417.06

A. DRAWINGS
See NOA 99-0219.01

B. TESTS
See NOA 99-0219.01

C. CALCULATIONS
See NOA 99-0219.01

D. MATERIAL CERTIFICATIONS
See NOA 99-0219.01

E. STATEMENTS
See NOA 99-0219.01

F. OTHER
See NOA 99-0219.01

4. EVIDENCE SUBMITTED UNDER PREVIOUS APPROVAL # 06-0706.17

A. DRAWINGS

1. *Drawing No. 07-309, titled " 0.063" Aluminum Storm Panel ", sheets 1 through 5 of 5, prepared by Thornton Tomasetti, dated April 10, 2007, signed and sealed by J. W. Knezevich, P.E.*

B. TESTS

1. *Test report on Uniform Static Air Pressure Test, Large Missile Impact Test, and Cyclic Wind Pressure Test of 0.063" Aluminum Storm Panels Shutter, prepared by Hurricane Test Laboratory, LLC, Report No. 0411-1011-05, dated February 09, 2006, signed and sealed by Vinu J. Abraham, P.E.*

C. CALCULATIONS

1. *0.063" Aluminum Storm Panels Calculations, Sheets 1 through 45 of 45, by Thornton Tomasetti, dated April 09, 2007, signed and sealed by John W. Knezevich, P.E.*

D. QUALITY ASSURANCE

1. *By Miami-Dade County Building Code Compliance Office.*

E. MATERIAL CERTIFICATIONS

1. *None.*

Helmy A. Makar, P.E., M.S.
Product Control Unit Supervisor
NOA No. 12-0809.04
Expiration Date: 04/18/2017
Approval Date: 12/13/2012

NOTICE OF ACCEPTANCE: EVIDENCE SUBMITTED

5. EVIDENCE SUBMITTED UNDER PREVIOUS APPROVAL # 12-0419.01

A. DRAWINGS

1. *Drawing No. 07-309, titled " 0.063" Aluminum Storm Panel ", sheets 1 through 5 of 5, prepared by Knezevich Associates Consulting Engineers, dated April 10, 2007, last revision #2 dated April 17, 2012, signed and sealed by V. J. Knezevich, P.E.*

B. TESTS

1. *Verification Test report on Uniform Static Air Pressure Test, Large Missile Impact Test, and Cyclic Wind Pressure Test of 0.063" Aluminum Storm Panels Shutter, prepared by Blackwater Testing, Inc., Report No. AE-12-002, dated April 23, 2012, signed and sealed by Yamil G. Kuri, P.E.*

C. CALCULATIONS

1. *None.*

D. QUALITY ASSURANCE

1. *By Miami-Dade County Department of Permitting, Environment, and Regulatory Affairs (PERA).*

E. MATERIAL CERTIFICATIONS

1. *None.*

F. OTHERS

1. *Letter of Compliance to Florida Building Code, 2010 Edition, prepared by Knezevich Associates Consulting Engineers, dated April 18, 2012, signed and sealed by V. J. Knezevich, P.E.*

6. NEW EVIDENCE SUBMITTED

A. DRAWINGS

1. *Drawing No. 12-167, titled " 0.063" Aluminum Storm Panel ", sheets 1 through 5 of 5, prepared by Knezevich Associates Consulting Engineers, dated July 10, 2012, signed and sealed by V. J. Knezevich, P.E., on July 10, 2012.*

B. TESTS

1. *None.*

C. CALCULATIONS

1. *None.*

D. QUALITY ASSURANCE

1. *By Miami-Dade County Department of Regulatory and Economic Resources.*

E. MATERIAL CERTIFICATIONS

1. *None.*

Helmy A. Makar, P.E., M.S.
Product Control Unit Supervisor
NOA No. 12-0809.04
Expiration Date: 04/18/2017
Approval Date: 12/13/2012

GENERAL NOTES:

1. THESE PRODUCT EVALUATION DOCUMENTS REPRESENT A LARGE MISSILE IMPACT PROTECTIVE SHUTTER SYSTEM ANALYZED WITH THE PROVISION SET FOR THE ISSUANCE OF A NOTICE OF ACCEPTANCE (NOA) BY MIAMI-DADE COUNTY PRODUCT CONTROL SECTION FOR THE HIGH VELOCITY HURRICANE ZONE (HVHZ) OF THE FLORIDA BUILDING CODE 2010.
2. NO INCREASE IN ALLOWABLE STRESS HAS BEEN USED IN THE DESIGN OF THIS PRODUCT. WIND LOAD DURATION FACTOR Cd = 1.6 WAS USED FOR WOOD SCREW DESIGN.
3. DETERMINE THE POSITIVE AND NEGATIVE DESIGN LOADS TO USE WHEN REFERENCING THESE DOCUMENTS IN ACCORDANCE WITH THE GOVERNING CODE AND GOVERNING WIND VELOCITY. FOR WIND LOAD CALCULATIONS IN ACCORDANCE WITH ASCE 7-10, A DIRECTIONALITY FACTOR OF Kd =0.85 SHALL BE USED.
4. THESE PRODUCT EVALUATION DOCUMENTS ARE GENERIC AND DO NOT INCLUDE INFORMATION FOR SITE-SPECIFIC APPLICATION OF THIS SHUTTER SYSTEM.
5. USE OF THESE PRODUCT EVALUATION DOCUMENTS SHALL COMPLY WITH CHAPTER 61G15-23 OF THE FLORIDA ADMINISTRATIVE CODE.
6. THESE PRODUCT EVALUATION DOCUMENTS ARE INTENDED FOR USE ONLY BY A LICENSED CONTRACTOR, PROFESSIONAL ENGINEER OR REGISTERED ARCHITECT AND ARE SUITABLE TO BE APPLIED BY THE CONTRACTOR PROVIDED THE CONTRACTOR DOES NOT DEVIATE FROM THE CONDITIONS DETAILED HEREIN AND THE CONTRACTOR VERIFIES THAT THE EXISTING STRUCTURE DOES NOT DEVIATE IN EITHER FORM OR MATERIAL FROM THE STRUCTURAL SUBSTRATES DETAILED HEREIN. CONTRACTOR SHALL VERIFY EXISTING STRUCTURE CAN WITHSTAND SUPERIMPOSED LOAD OF SHUTTER.
7. ANY MODIFICATIONS OR ADDITIONS TO THESE PRODUCT EVALUATION DOCUMENTS WILL VOID THE PRODUCT EVALUATION DOCUMENTS.
8. WHEN THE SITE CONDITIONS DEVIATE FROM THESE PRODUCT EVALUATION DOCUMENTS, THE BUILDING OFFICIAL MAY ELECT ONE OF THE FOLLOWING OPTIONS:
   - A) REQUIRE THAT SITE SPECIFIC DOCUMENTS BE PREPARED, SIGNED, DATED AND SEALED BY A LICENSED ENGINEER OR REGISTERED ARCHITECT, WHICH DETAIL AND JUSTIFY THE DEVIATION. SAID DOCUMENTS SHALL BE SUBMITTED TO THE PRODUCT ENGINEER FOR REVIEW AS A CONDITION TO THE BUILDING OFFICIAL GRANTING HIS/HER APPROVAL.
   - B) REQUIRE THAT A ONE-TIME SITE SPECIFIC APPROVAL BE APPLIED FOR AND SECURED FROM THE MIAMI-DADE COUNTY PRODUCT CONTROL SECTION.

   WHEN THE SITE CONDITION DEVIATIONS OCCUR WITHIN THE HIGH VELOCITY HURRICANE ZONE AREAS ONLY OPTION "B" SHALL BE ACCEPTED BY THE BUILDING OFFICIAL.
9. PRODUCT MARKINGS SHALL BE WITHIN 12" OF ONE END OF THE PANEL WITH A MINIMUM OF ONE MARKING PER PANEL AND SHALL BE PERMANENTLY LABELED AS FOLLOWS:

   AMF BUILDING PRODUCTS
   WEST PALM BEACH, FLORIDA
   MIAMI-DADE COUNTY PRODUCT CONTROL APPROVED
10. STORM PANELS SHALL BE 0.063" THICK, 3004-H34 ALUMINUM ALLOY WITH A MIN. Fy=25.0 KSI OR 5052-H32 ALUMINUM ALLOY WITH A MIN. Fy=23.0 KSI.
11. ALL EXTRUSIONS SHALL BE 6063-T6 ALUMINUM ALLOY, U.O.N.
12. ALL BOLTS AND WASHERS SHALL BE GALVANIZED OR STAINLESS STEEL WITH A MINIMUM TENSILE STRENGTH OF 60 K.S.I., U.O.N.
13. TOP & BOTTOM DETAILS SHOWN MAY BE INTERCHANGED AS FIELD CONDITIONS DICTATE. PANELS MAY BE MOUNTED HORIZONTALLY WHERE APPLICABLE.
14. THE PERMIT HOLDER SHALL VERIFY THE ADEQUACY OF THE EXISTING STRUCTURE TO SUSTAIN THE NEW SUPERIMPOSED LOADS AND TO VERIFY ALL DIMENSIONS AT THE JOB SITE, BEFORE COMMENCING WITH THE WORK.

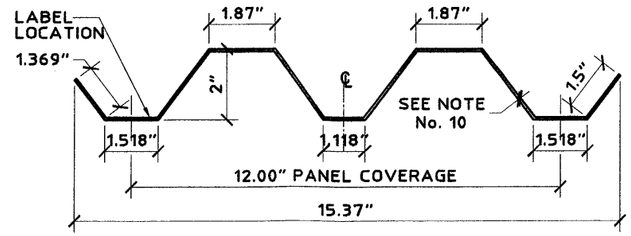

1 **FULL ALUMINUM STORM PANEL**
SCALE: 3" = 1' - 0"

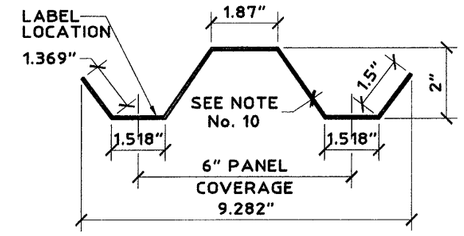

2 **HALF ALUMINUM STORM PANEL**
SCALE: 3" = 1' - 0"

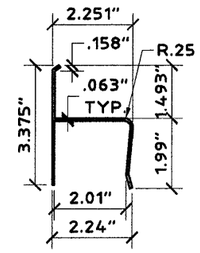

3 **"h" HEADER**
SCALE: 3" = 1' - 0"

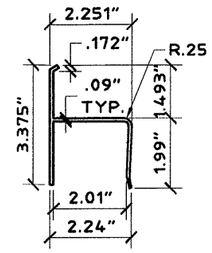

4 **HEAVY "h" HEADER**
SCALE: 3" = 1' - 0"

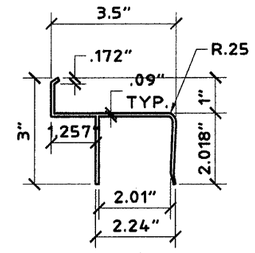

5 **BUILD-OUT "h" HEADER**
SCALE: 3" = 1' - 0"

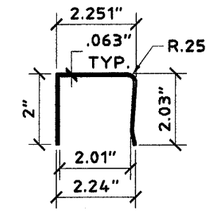

6 **"U" HEADER**
SCALE: 3" = 1' - 0"

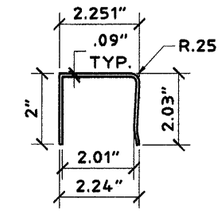

7 **HEAVY "U" HEADER**
SCALE: 3" = 1' - 0"

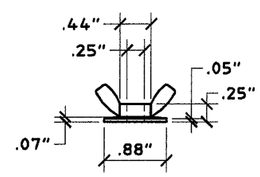

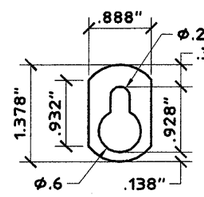

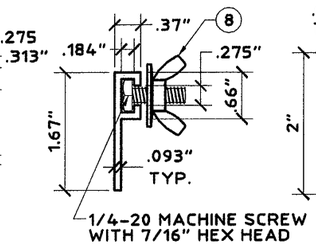

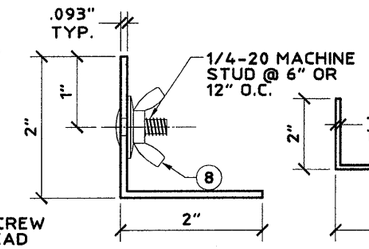

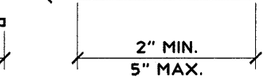

MATERIAL: ZAMAC 3 ALLOY

8 **WASHERED WING NUT**
SCALE: HALF SIZE

9 **KEYHOLE WASHER**
SCALE: HALF SIZE

10 **"F" TRACK**
SCALE: HALF SIZE

11 **STUD ANGLE**
SCALE: HALF SIZE

12 **BUILD-OUT ANGLE**
SCALE: 3" = 1' - 0"

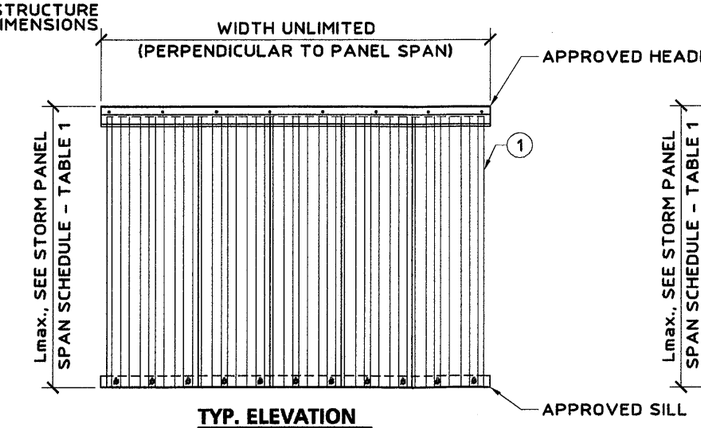

TYP. ELEVATION
SCALE: 1/2" = 1'-0"

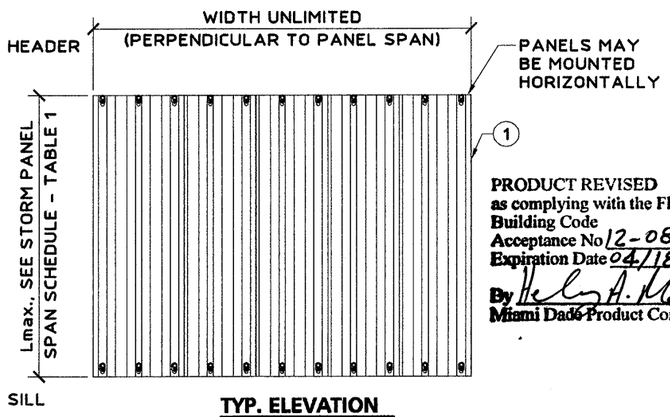

TYP. ELEVATION
SCALE: 1/2" = 1'-0"

PRODUCT REVISED
as complying with the Florida Building Code
Acceptance No 12-0809.04
Expiration Date 04/18/2017
By
Miami Dade Product Control

KNEZEVICH ASSOCIATES
Consulting Engineers * COA 27989
2590 S.W. 105th Terrace * Davie, Florida 33324
T (954) 821-6933 * VJ@Knezevich-Associates.com
www.Knezevich-Associates.com

Copyright © 2012 VJKnezevich & Associates, LLC d/b/a Knezevich Associates

0.063" ALUMINUM STORM PANEL

AMF Building Products
9040 Belvedere Road
West Palm Beach, FL 33411
Tel: (561) 790-5799

revisions			
no	date	by	description

V.J. Knezevich
Professional Engineer
FL License No: PE 0040983

JUL 10 2012

drawn by	scale
ARV	AS NOTED

date 07/10/2012

drawing no. 12-167

sheet 1 of 5

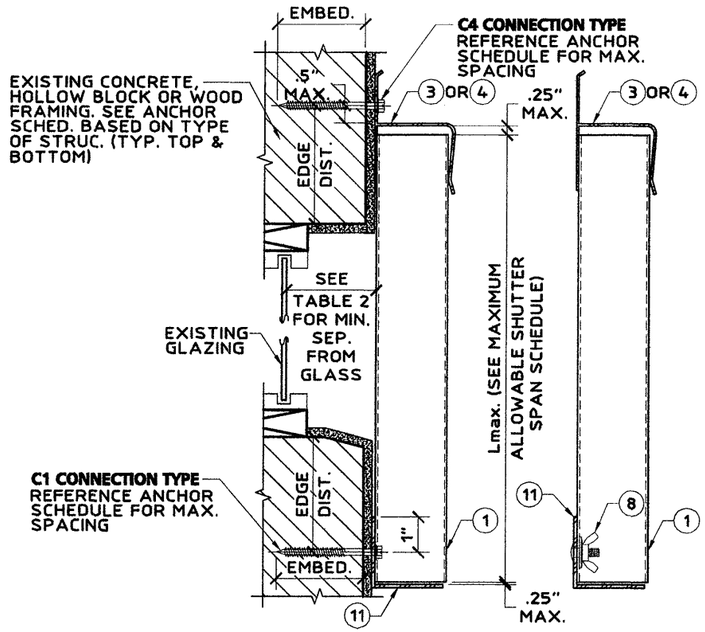

A WALL MOUNT SECTION
SCALE: 3" = 1' - 0"

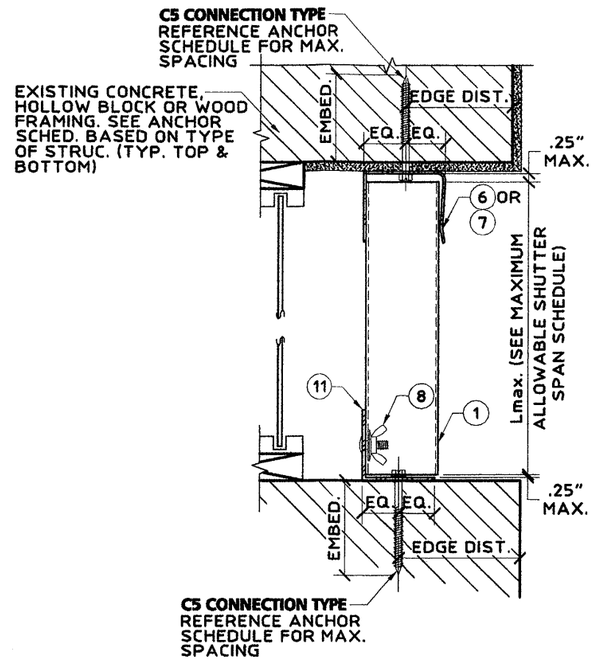

B TRAP MOUNT SECTION
SCALE: 3" = 1' - 0"

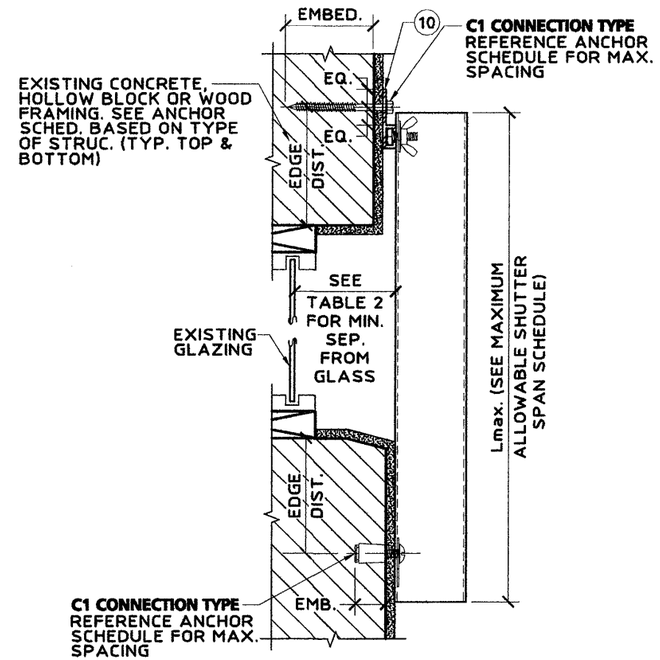

C WALL MOUNT SECTION
SCALE: 3" = 1' - 0"

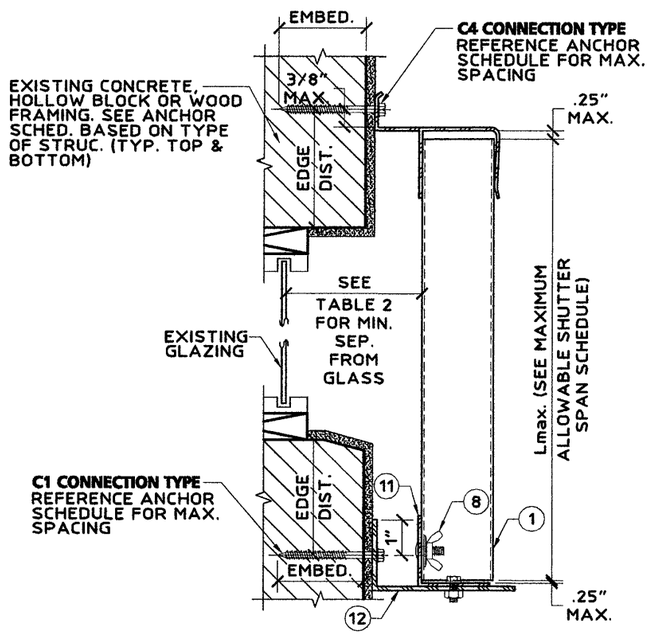

D BUILD-OUT MOUNT SECTION
SCALE: 3" = 1' - 0"

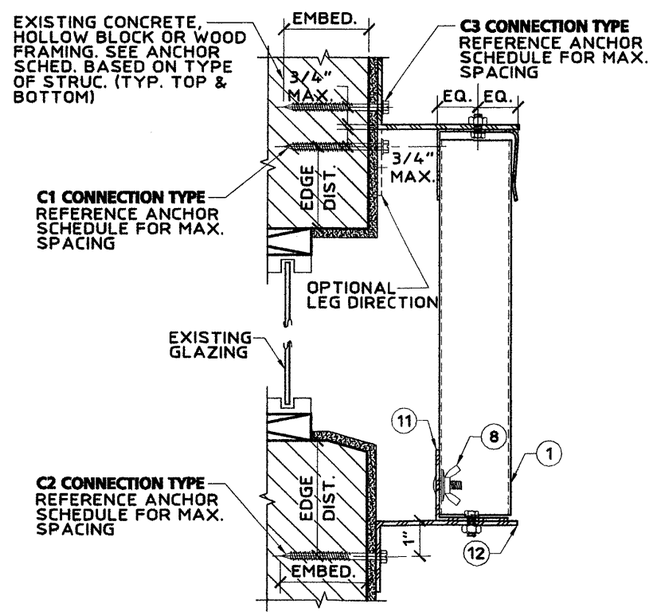

E ALT. BUILD-OUT MOUNT SECTION
SCALE: 3" = 1' - 0"

PRODUCT REVISED
as complying with the Florida
Building Code
Acceptance No 12-0809.04
Expiration Date 04/18/2017
By
Miami Dade Product Control

KNEZEVICH ASSOCIATES
Consulting Engineers * COA 27989
2590 S.W. 105th Terrace * Davie, Florida 33324
T (954) 821-6933 * VJ@Knezevich-Associates.com
www.Knezevich-Associates.com

Copyright © 2012 VJKnezevich & Associates, LLC d/b/a Knezevich Associates

0.063" ALUMINUM STORM PANEL

AMF Building Products
9040 Belvedere Road
West Palm Beach, FL 33411
Tel: (561) 790-5799

revisions			
no	date	by	description

V.J. Knezevich
Professional Engineer
FL License No: PE 0070983

JUL 10 2012

drawn by	scale
ARV	AS NOTED

date 07/10/2012

drawing no. 12-167

sheet 2 of 5

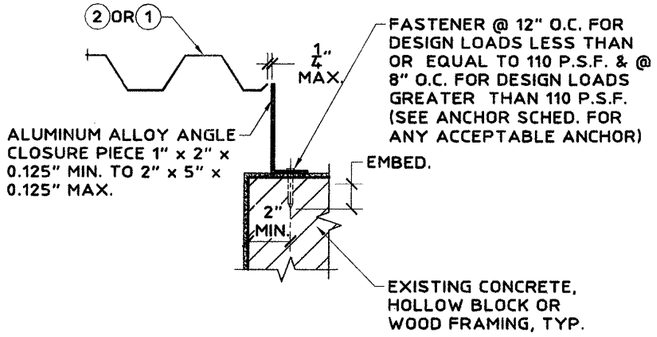

F BUILD-OUT MOUNT CLOSURE SECTION
SCALE: 1-1/2" = 1' - 0"

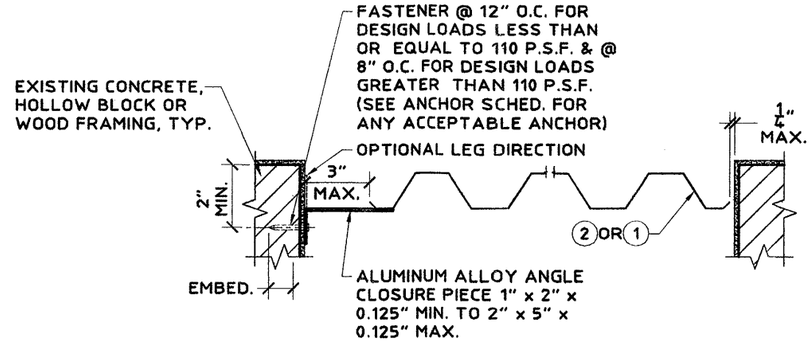

G TRAP MOUNT CLOSURE SECTION
SCALE: 1-1/2" = 1' - 0"

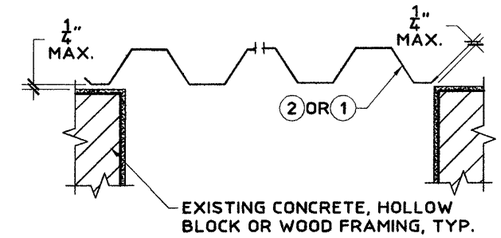

H WALL MOUNT CLOSURE SECTION
SCALE: 1-1/2" = 1' - 0"

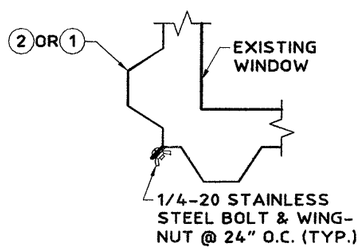

J TYPICAL CORNER CLOSURE PLAN
SCALE: 1-1/2" = 1' - 0"

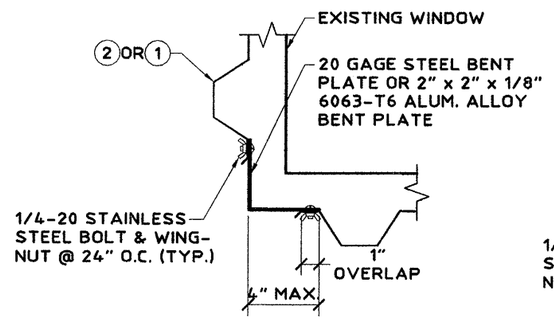

K TYPICAL CORNER CLOSURE PLAN
SCALE: 1-1/2" = 1' - 0"

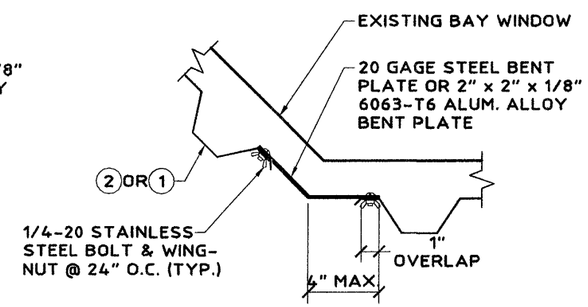

L TYPICAL CORNER CLOSURE PLAN
SCALE: 1-1/2" = 1' - 0"

PRODUCT REVISED
as complying with the Florida
Building Code
Acceptance No 12-0809.04
Expiration Date 04/18/2017
By
Miami Dade Product Control

KNEZEVICH ASSOCIATES
Consulting Engineers * COA 27989
2590 S.W. 105th Terrace * Davie, Florida 33324
T (954) 821-6933 * VJ@Knezevich-Associates.com
www.Knezevich-Associates.com

Copyright © 2012 VJKnezevich & Associates, LLC d/b/a Knezevich Associates

0.063" ALUMINUM STORM PANEL

AMF Building Products
9040 Belvedere Road
West Palm Beach, FL 33411
Tel: (561) 790-5799

revisions

no	date	by	description

V.J. Knezevich
Professional Engineer
FL License No.: PE-0010983

JUL 10 2012

drawn by	scale
ARV	AS NOTED

date 07/10/2012

drawing no.
12-167

sheet 3 of 5

ANCHOR SCHEDULE

FASTENER MAXIMUM SPACING (INCHES) REQUIRED FOR VARIOUS DESIGN LOADS AND SPANS

EXIST. STRUC.	ANCHOR TYPE	LOAD (W) P.S.F. MAX. (SEE NOTE 1)	MIN. 2" EDGE DISTANCE															MIN. 3" EDGE DISTANCE													
			SPANS UP TO 5'-0" (SEE NOTE 1)					SPANS UP TO 8'-8" (SEE NOTE 1)					SPANS UP TO 10'-0" (SEE NOTE 1)					SPANS UP TO 5'-0" (SEE NOTE 1)					SPANS UP TO 8'-8" (SEE NOTE 1)					SPANS UP TO 10'-0" (SEE NOTE 1)				
			CONNECTION TYPE (SEE NOTE 3)					CONNECTION TYPE (SEE NOTE 3)					CONNECTION TYPE (SEE NOTE 3)					CONNECTION TYPE (SEE NOTE 3)					CONNECTION TYPE (SEE NOTE 3)					CONNECTION TYPE (SEE NOTE 3)				
			C1	C2	C3	C4	C5	C1	C2	C3	C4	C5	C1	C2	C3	C4	C5	C1	C2	C3	C4	C5	C1	C2	C3	C4	C5	C1	C2	C3	C4	C5
CONCRETE	1/4"ø ITW TAPCON WITH 1-3/4" MIN. EMBEDMENT (MIN. 3,192 P.S.I. CONCRETE)	62.0	12	12	12	11	12	12	12	12	5	7	12	12	12	4	6	12	12	12	12	12	12	12	12	5	8	12	12	12	4	7
		72.0	12	12	12	9	11	12	12	12	4	6	12	12	8	3	5	12	12	12	9	12	12	12	12	4	7	12	12	9	3	6
		83.0	12	12	12	7	9	12	12	8	3	5	12	12	8	3	5	12	12	12	7	11	12	12	9	3	6	12	12	8	3	6
		120.0	12	12	12	4	6	12	12	8	3	5	12	12	8	3	5	12	12	12	4	7	12	12	8	3	6	12	12	8	3	6
		200.0	12	12	8	3	5	12	12	8	3	5	12	12	8	3	5	12	12	8	3	6	12	12	8	3	6	12	12	8	3	6
	* 1/4"ø ELCO MALE/ FEMALE "PANELMATE" WITH 1-3/4" MIN. EMBED. & 1/4-20 MACHINE SCREW WITH NUT (MIN. 3,000 P.S.I. CONCRETE)	62.0																12	12	11	12	12	12	12	12	5	8	12	12	12	4	7
		72.0																12	12	12	9	12	12	12	12	4	7	12	12	8	3	6
		83.0																12	12	12	7	11	12	12	8	3	6	12	12	7	3	6
		120.0																12	12	12	4	7	12	12	7	3	6	12	12	7	3	6
		200.0																12	12	7	3	6	12	12	7	3	6	12	12	7	3	6
	1/4"ø ELCO ULTRACON WITH 1-3/4" MIN. EMBEDMENT (MIN. 3,320 P.S.I. CONCRETE)	62.0	12	12	12	8	12	12	12	12	3	7	12	12	8	3	6	12	12	12	10	12	12	12	12	4	8	12	12	11	3	7
		72.0	12	12	12	6	10	12	12	8	3	6	12	10	6		5	12	12	12	8	12	12	12	11	3	7	12	12	7	3	6
		83.0	12	12	12	5	9	12	10	6		5	12	8	5		4	12	12	12	6	11	12	12	7	3	6	12	11	7	3	6
		120.0	12	12	9	3	6	12	8	5		4	12	8	5		4	12	12	12	4	7	12	11	7	3	6	12	11	7	3	6
		200.0	12	8	5		4	12	8	5		4	12	8	5		4	12	11	7	3	6	12	11	7	3	6	12	11	7	3	6
	1/4"ø POWERS ZAMAC NAIL-IN WITH 1-3/8" MIN. EMBEDMENT (MIN. 2,000 P.S.I. CONCRETE)	62.0	12	12	12	3	5	7	7	5		3	6	6	3			12	12	12	5	7	10	10	8		4	9	9	5		3
		72.0	10	10	10		4	6	6	3			5	4				12	12	12	4	6	9	9	5		3	7	6	3		3
		83.0	9	9	9		3	5	4				4	3				12	12	12	3	5	7	6	3		3	7	5	3		3
		120.0	6	6	4			4	3				4	3				9	9	6		4	7	5	3		3	7	5	3		3
		200.0	4	3				4	3				4	3				7	5	3		3	7	5	3		3	7	5	3		3
	* 1/4"-20x1-1/2" ALL POINTS SOLID SET MASONRY ANCHOR, WITH 7/8" EMBED. (MIN. 3,000 P.S.I. CONCRETE)	62.0	12	12	12	7	9	12	12	12		5	12	12	8		4	12	12	12	8	12	12	12	12		7	12	12	9		6
		72.0	12	12	12	5	8	12	12	8		4	11	9	5		4	12	12	12	6	10	12	12	9		6	12	10	6		5
		83.0	12	12	12	4	7	11	9	5		4	11	8	5			12	12	12	5	9	12	10	6		5	12	9	5		5
		120.0	12	12	8		4	11	8	5			11	8	5			12	12	10		6	12	9	5		5	12	9	5		5
		200.0	11	8	5			11	8	5			11	8	5			12	9	5		5	12	9	5		5	12	9	5		5
HOLLOW CONCRETE BLOCK	1/4"ø ITW TAPCON WITH 1-1/4" MIN. EMBEDMENT	62.0	12	12	12	3	5	7	7	6		3	6	6	3			12	12	12	4	6	8	8	7		3	7	7	4		3
		72.0	11	11	11		4	6	6	3			5	4				12	12	12	3	5	7	7	4		3	6	5	3		
		83.0	9	9	9		4	5	4				5	3				11	11	11		5	6	5	3			6	4			
		120.0	6	6	4			5	3				5	3				7	7	4		3	6	4				6	4			
		200.0	5	3				5	3				5	3				6	4				6	4				6	4			
	* 1/4"ø ELCO MALE/ FEMALE "PANELMATE" WITH 1-1/4" MIN. EMBED. & 1/4-20 MACHINE SCREW WITH NUT	62.0																12	12	12	5	8	11	11	9		4	10	10	6		4
		72.0																12	12	12	4	6	10	10	5		4	8	7	4		3
		83.0																12	12	12	3	6	8	7	4		3	8	6	3		3
		120.0																10	10	6		4	8	6	3		3	8	6	3		3
		200.0																8	6	3		3	8	6	3		3	8	6	3		3
	1/4"ø ELCO ULTRACON WITH 1-1/4" MIN. EMBEDMENT	62.0	12	12	12	3	6	7	7	6		3	6	6	4		3	12	12	12	4	8	9	9	7		4	8	8	5		4
		72.0	11	11	11		5	6	6	3		3	5	4				12	12	12	3	7	8	8	4		4	7	5	3		3
		83.0	10	10	10		5	5	4				5	4				12	12	12	3	6	7	5	3		3	6	5	3		3
		120.0	6	6	4		3	5	4				5	4				8	8	5		4	6	5	3		3	6	5	3		3
		200.0	5	4				5	4				5	4				6	5	3		3	6	5	3		3	6	5	3		3
	** 1/4"ø POWERS ZAMAC NAIL-IN WITH 1-1/4" MIN. EMBEDMENT	62.0																12	12	12	6	9	12	12	11	3	5	12	12	7		4
		72.0																12	12	12	5	7	12	12	7		4	10	8	5		3
		83.0																12	12	12	4	6	10	8	5		3	9	7	4		3
		120.0																12	12	8		4	9	7	4		3	9	7	4		3
		200.0																9	7	4		3	9	7	4		3	9	7	4		3
	* 1/4"-20x1-1/2" ALL POINTS SOLID SET MASONRY ANCHOR, WITH 7/8" EMBED.	62.0	12	12	12	7	9	12	12	12		5	12	12	8		4	12	12	12	8	12	12	12	12		7	12	12	9		6
		72.0	12	12	12	5	8	12	12	8		4	11	9	5		4	12	12	12	6	10	12	12	9		6	12	10	6		5
		83.0	12	12	12	4	7	11	9	5		4	11	8	5			12	12	12	5	9	12	10	6		5	12	9	5		5
		120.0	12	12	8		4	11	8	5			11	8	5			12	12	10		6	12	9	5		5	12	9	5		5
		200.0	11	8	5			11	8	5			11	8	5			12	9	5		5	12	9	5		5	12	9	5		5

ANCHOR SCHEDULE

FASTENER MAXIMUM SPACING (INCHES) REQUIRED FOR VARIOUS DESIGN LOADS AND SPANS

EXIST. STRUC.	ANCHOR TYPE	LOAD (W) P.S.F. MAX. (SEE NOTE 1)	MIN. 3/4" EDGE DISTANCE														
			SPANS UP TO 5'-0" (SEE NOTE 1)					SPANS UP TO 8'-8" (SEE NOTE 1)					SPANS UP TO 10'-0" (SEE NOTE 1)				
			CONNECTION TYPE (SEE NOTE 3)					CONNECTION TYPE (SEE NOTE 3)					CONNECTION TYPE (SEE NOTE 3)				
			C1	C2	C3	C4	C5	C1	C2	C3	C4	C5	C1	C2	C3	C4	C5
WOOD	2" MIN. 1/4"ø x MIN. 3" LONG LAG SCREW W/ MIN. 1.75" EMBED. SHEAR PARALLEL OR PERP. TO WOOD GRAIN	62.0	12	12	12	12	9	12	12	12	7	5	12	12	12	5	4
		72.0	12	12	12	12	8	12	12	12	5	4	12	12	11	4	4
		83.0	12	12	12	10	7	12	12	11	4	4	12	12	10	4	3
		120.0	12	12	12	6	5	12	12	10	4	3	12	12	10	4	3
		200.0	12	12	10	4	3	12	12	10	4	3	12	12	10	4	3
	* 7/16"ø WOOD BUSHING WITH 7/8" MIN. EMBEDMENT & 1/4-20 STAINLESS STEEL MACHINE SCREW ANCHOR INSTALLED IN SPRUCE PINE FIR LUMBER MINIMUM DENSITY, G= 0.42	62.0	12	12	12	4		9	9	7			7	7	4		
		72.0	12	12	12	3		7	7	4			6	5	3		
		83.0	11	11	11			6	5	3			6	4			
		120.0	8	8	5			6	4				6	4			
		200.0	6	4				6	4				6	4			
	* 1/4"ø ELCO MALE/ FEMALE "PANELMATE" WITH 1-7/8" MIN. EMBED. & 1/4-20 MACHINE SCREW WITH NUT	62.0	12	12	12	7	9	12	12	11	3	5	12	12	7		4
		72.0	12	12	12	5	8	12	12	7		4	10	8	5		4
		83.0	12	12	12	4	7	10	8	5		4	10	7	4		4
		120.0	12	12	8		5	10	7	4		4	10	7	4		4
		200.0	10	7	4		4	10	7	4		4	10	7	4		4

ANCHOR NOTES:

1. **SPANS AND LOADS SHOWN HERE ARE FOR DETERMINING ANCHOR SPACING ONLY. ALLOWABLE SHUTTER SPANS FOR SPECIFIC LOADS MUST BE LIMITED TO THOSE SHOWN IN TABLE 1.**
2. ENTER ANCHOR SCHEDULE BASED ON THE EXISTING STRUCTURE MATERIAL, ANCHOR TYPE AND EDGE DISTANCE. SELECT DESIGN LOAD GREATER THAN OR EQUAL TO NEGATIVE DESIGN LOAD ON SHUTTER AND SELECT SPAN GREATER THAN OR EQUAL TO SHUTTER SPAN.
3. SEE MOUNTING SECTION DETAILS FOR IDENTIFICATION OF CONNECTION TYPE.
4. EXISTING STRUCTURE MAY BE CONCRETE, HOLLOW BLOCK OR WOOD FRAMING. REFERENCE ANCHOR SCHEDULE FOR PROPER ANCHOR TYPE BASED ON TYPE OF EXISTING STRUCTURE.
5. ANCHORS SHALL BE INSTALLED IN ACCORDANCE WITH MANUFACTURERS' RECOMMENDATIONS.
6. MINIMUM EMBEDMENT AND EDGE DISTANCE EXCLUDES WALL FINISH OR STUCCO.
7. WHERE EXISTING STRUCTURE IS POST-TENSIONED CONCRETE CONTRACTOR SHALL LOCATE CABLES PRIOR TO ANCHORING AND COORDINATE ANCHORAGE SUCH THAT CABLES ARE NOT DAMAGED.
8. WHERE EXISTING STRUCTURE IS WOOD FRAMING, WOOD FRAMING CONDITIONS VARY. FIELD VERIFY THAT FASTENERS ARE INTO ADEQUATE WOOD FRAMING MEMBERS, NOT PLYWOOD. FASTENING TO PLYWOOD IS ACCEPTABLE ONLY FOR SIDE CLOSURE PIECES.
9. WHERE LAG SCREWS, MALE AND FEMALE PANELMATES FASTEN TO NARROW FACE OF STUD FRAMING, FASTENER SHALL BE LOCATED IN CENTER OF NOMINAL 2" x 4" (MIN.) WOOD STUD. 3/4" EDGE DISTANCE IS ACCEPTABLE FOR WOOD FRAMING. WOOD STUD SHALL BE "SOUTHERN PINE" G=0.55 OR GREATER DENSITY. LAG SCREWS SHALL HAVE PHILLIPS PAN HEAD OR HEX HEAD.
10. MACHINE SCREWS SHALL HAVE MINIMUM OF 1/2" ENGAGEMENT OF THREADS IN BASE ANCHOR AND MAY HAVE EITHER A PAN HEAD, TRUSS HEAD, OR WAFER HEAD (SIDEWALK BOLT), U.O.N.
11. ▨ DESIGNATES ANCHOR CONDITIONS WHICH ARE NOT ACCEPTABLE USES.
12. * DESIGNATES ANCHORS WHICH ARE REMOVABLE BY REMOVING MACHINE SCREW, NUT OR WASHERED WINGNUT.
13. ** THE MINIMUM EDGE DISTANCE FOR THE POWERS ZAMAC NAIL-IN EMBEDDED IN HOLLOW CONCRETE BLOCK IS 3-3/4".
14. POWERS ZAMAC NAIL-IN AND ALL POINTS SOLID SET MASONRY ANCHOR MAY NOT BE USED IN CONCRETE SLABS OR CEILINGS. EXCEPTION: THESE ANCHORS MAY BE USED IN CONCRETE SLABS ON GRADE.

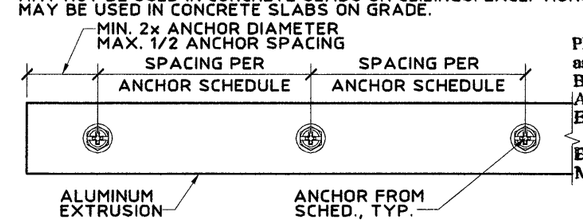

PRODUCT REVISED
as complying with the Florida Building Code
Acceptance No 12-0809.04
Expiration Date 04/18/2017
By
Miami Dade Product Control

KNEZEVICH ASSOCIATES
Consulting Engineers * COA 27989
2590 S.W. 105th Terrace * Davie, Florida 33324
T (954) 821-6933 * VJ@Knezevich-Associates.com
www.Knezevich-Associates.com

Copyright © 2012 VJKnezevich & Associates, LLC d/b/a Knezevich Associates

0.063" ALUMINUM STORM PANEL

AMF Building Products
9040 Belvedere Road
West Palm Beach, FL 33411
Tel: (561) 790-5799

revisions

no	date	by	description

V.J. Knezevich
Professional Engineer
FL License No.: PE 0010983

JUL 10 2012

drawn by ARV | scale AS NOTED
date 07/10/2012
drawing no. 12-167
sheet 4 of 5

TABLE 2

MINIMUM STORM PANEL SEPARATION FROM GLASS

POSITIVE DESIGN LOAD (W) (P.S.F.)	MAXIMUM STORM PANEL SPAN (FT-IN)	MINIMUM SEP. FOR ALL INSTALLATIONS LESS THAN 30' ABOVE GRADE (INCHES)	MINIMUM SEP. FOR ALL INSTALLATIONS GREATER THAN 30' ABOVE GRADE (INCHES)
30.00	5' - 0"	3"	1"
30.00	7' - 0"	3"	1-1/4"
30.00	9' - 0"	3"	1-1/2"
30.00	10' - 0"	3"	1-7/8"
50.00	5' - 0"	3"	1-1/8"
50.00	7' - 0"	3"	1-3/8"
50.00	9' - 0"	3"	1-7/8"
50.00	10' - 0"	3"	2-3/8"
70.00	5' - 0"	3"	1-1/8"
70.00	7' - 0"	3"	1-1/2"
70.00	9' - 0"	3"	2-1/4"
70.00	10' - 0"	3"	3"
90.00	5' - 0"	3"	1-1/8"
90.00	6' - 0"	3"	1-3/8"
90.00	7' - 0"	3"	1-1/2"
120.00	5' - 0"	3"	1-1/4"
120.00	5' - 6"	3"	1-1/4"

TABLE 1 NOTES:

1. TABLE 1 IS APPLICABLE FOR BOTH POSITIVE AND NEGATIVE LOADS.
2. FOR DESIGN LOADS BETWEEN TABULATED VALUES. USE NEXT HIGHER LOAD OR LINEAR INTERPOLATION MAY BE USED TO DETERMINE ALLOWABLE SPANS.

TABLE 2 NOTE:

1. ENTER TABLE 2 WITH POSITIVE DESIGN LOAD TO DETERMINE MINIMUM STORM SHUTTER SEPARATION FROM GLASS.

TABLE 1

STORM PANEL MAXIMUM SPAN SCHEDULE

DESIGN LOAD W (P.S.F.)	ALL MOUNTING CONDITIONS L MAX. (FT-IN)
73.00	8' - 8"
75.00	8' - 6"
80.00	8' - 0"
85.00	7' - 6"
90.00	7' - 1"
95.00	6' - 8"
100.00	6' - 4"
105.00	6' - 1"
110.00	5' - 9"
115.00	5' - 6"
120.00	5' - 4"
125.00	5' - 1"
130.00	5' - 0"
135.00	5' - 0"
140.00	5' - 0"
145.00	5' - 0"
150.00	5' - 0"
160.00	4' - 9"
170.00	4' - 5"
180.00	4' - 2"
190.00	4' - 0"
200.00	3' - 9"

PRODUCT REVISED
as complying with the Florida
Building Code
Acceptance No 12-0809.04
Expiration Date 04/18/2017
By
Miami Dade Product Control

KNEZEVICH ASSOCIATES
Consulting Engineers * COA 27989
2590 S.W. 105th Terrace * Davie, Florida 33324
T (954) 821-6933 * VJ@Knezevich-Associates.com
www.Knezevich-Associates.com

Copyright © 2012 VJKnezevich & Associates, LLC d/b/a Knezevich Associates

0.063" ALUMINUM STORM PANEL

AMF Building Products
9040 Belvedere Road
West Palm Beach, FL 33411
Tel: (561) 790-5799

revisions

no	date	by	description

V.J. Knezevich
Professional Engineer
FL License No.: PE-0010983

JUL 10 2012

drawn by ARV
scale AS NOTED
date 07/10/2012
drawing no. 12-167
sheet 5 of 5