MIAMI-DADE COUNTY
DEPARTMENT OF REGULATORY AND ECONOMIC RESOURCES (RER)
BOARD AND CODE ADMINISTRATION DIVISION

MIAMI-DADE COUNTY
PRODUCT CONTROL SECTION
11805 SW 26 Street, Room 208
Miami, Florida 33175-2474
T (786) 315-2590 F (786) 315-2599
www.miamidade.gov/economy

NOTICE OF ACCEPTANCE (NOA)

Hendee Enterprises, Inc.
9350 South Point Drive
Houston, TX 77054

SCOPE:
This NOA is being issued under the applicable rules and regulations governing the use of construction materials. The documentation submitted has been reviewed and accepted by Miami-Dade County RER- Product Control Section to be used in Miami Dade County and other areas where allowed by the Authority Having Jurisdiction (AHJ).

This NOA shall not be valid after the expiration date stated below. The Miami-Dade County Product Control Section (In Miami Dade County) and/or the AHJ (in areas other than Miami Dade County) reserve the right to have this product or material tested for quality assurance purposes. If this product or material fails to perform in the accepted manner, the manufacturer will incur the expense of such testing and the AHJ may immediately revoke, modify, or suspend the use of such product or material within their jurisdiction. RER reserves the right to revoke this acceptance, if it is determined by Miami-Dade County Product Control Section that this product or material fails to meet the requirements of the applicable building code.

This product is approved as described herein, and has been designed to comply with the High Velocity Hurricane Zone of the Florida Building Code.

DESCRIPTION: " Force 12 " Flexible Wind Abatement Screen System

APPROVAL DOCUMENT: Drawing No. F12, titled " Force 12 Flexible Wind Abatement Screen System ", sheets D1 through D15 of D15, last revision #3 dated April 19, 2012, signed & sealed by James R. Bailey, P.E., on July 27, 2012 bearing the Miami-Dade County Product Control Revision stamp with the Notice of Acceptance number and the expiration date by the Miami-Dade County Product Control Section.

MISSILE IMPACT RATING: Large and Small Missile Impact Resistant

LABELING: Each unit shall bear a permanent label with the manufacturer's name or logo, city, state and the following statement: "Miami-Dade County Product Control Approved", unless otherwise noted herein.

RENEWAL of this NOA shall be considered after a renewal application has been filed and there has been no change in the applicable building code negatively affecting the performance of this product.

TERMINATION of this NOA will occur after the expiration date or if there has been a revision or change in the materials, use, and/or manufacture of the product or process. Misuse of this NOA as an endorsement of any product, for sales, advertising or any other purposes shall automatically terminate this NOA. Failure to comply with any section of this NOA shall be cause for termination and removal of NOA.

ADVERTISEMENT: The NOA number preceded by the words Miami-Dade County, Florida, and followed by the expiration date may be displayed in advertising literature. If any portion of the NOA is displayed, then it shall be done in its entirety.

INSPECTION: A copy of this entire NOA shall be provided to the user by the manufacturer or its distributors and shall be available for inspection at the job site at the request of the Building Official.

This NOA **revises NOA # 09-0427.02** and consists of this page 1, evidence submitted pages E-1, E-2 & E-3 as well as approval document mentioned above.
The submitted documentation was reviewed by **Helmy A. Makar, P.E., M.S.**

MIAMI-DADE COUNTY APPROVED

03/07/2013

NOA No. 12-0820.04
Expiration Date: 08/29/2014
Approval Date: 03/07/2013

Hendee Enterprises, Inc.

NOTICE OF ACCEPTANCE: EVIDENCE SUBMITTED

1. EVIDENCE SUBMITTED UNDER PREVIOUS APPROVAL #00-0929.12

A. DRAWINGS

1. *Drawing No. F1201, titled "Force 12", prepared by Absolute Engineering Group CA-7895, dated May 3, 2000, last revision #5 dated July 19, 2001, sheets 1 through 9 of 9, signed and sealed by Robert R. Bullard, P.E.*

B. TESTS

1. *Test report on Large Missile Impact Test, Cyclic Wind Pressure Test, and Static Wind Pressure Test of Hendee Enterprises Force 12 Protective Screen System, prepared by National Certified Testing Laboratories, Report No. NCTL 210-2310-1, 2, 3, dated May 2, 2001, signed and sealed by Barry Portnoy, P.E.*
2. *Addendum #1 to Test Report No. NCTL 210-2310-1, 2, 3, dated March 2, 2001, signed and sealed by Barry Portnoy, P.E.*
3. *Addendum #2 to Test Report No. NCTL 210-2310-1, 2, 3, dated May 2, 2001, signed and sealed by Barry Portnoy, P.E.*

C. CALCULATIONS

1. *Calculations, dated June 7, 2001, page 1 of 1, prepared by Robert R. Bullard, P.E., signed and sealed by Robert R. Bullard, P.E.*

D. MATERIAL CERTIFICATIONS

1. *Mill certified Inspection Report with screen's physical properties.*

2. EVIDENCE SUBMITTED UNDER PREVIOUS APPROVAL #02-0419.02

A. DRAWINGS

See NOA 00-0929.12

B. TESTS

See NOA 00-0929.12

C. CALCULATIONS

See NOA 00-0929.12

D. MATERIAL CERTIFICATIONS

See NOA 00-0929.12

E. STATEMENTS

See NOA 00-0929.12

F. OTHER

NOA **00-0929.12**

Helmy A. Makar, P.E., M.S.
Product Control Unit Supervisor
NOA No. 12-0820.04
Expiration Date: 08/29/2014
Approval Date: 03/07/2013

NOTICE OF ACCEPTANCE: EVIDENCE SUBMITTED

3. EVIDENCE SUBMITTED UNDER PREVIOUS APPROVAL #04-0413.04

A. DRAWINGS

1. *Drawing No. F1201, titled "Force 12 panel mounting cross sections", sheets 1 thru 9 of 9, dated May 3, 2000, last revision dated 07/19/2001, sheets 1 to 4, and 06/26/2001, sheets 5 to 9, all prepared, signed & sealed by Robert R. Bullard, P.E.*

B. TESTS

1. *None.*

C. CALCULATIONS

1. *None.*

D. QUALITY ASSURANCE

1. *By Miami-Dade County Building Code Compliance Office.*

E. MATERIAL CERTIFICATIONS

1. *None.*

4. EVIDENCE SUBMITTED UNDER PREVIOUS APPROVAL # 06-1214.03

A. DRAWINGS

1. *Drawing No. F12, titled " Force 12 Flexible Wind Abatement Screen System ", sheets 1 through 15 of 15, last revision #2 dated March 16, 2009, signed & sealed by James R. Bailey, P.E., on March 24, 2009.*

B. TESTS

1. *None.*

C. CALCULATIONS

1. *Calculations, dated September 11, 2007, page 1 through 17 of 17, prepared by Scott Wolters, P.E., signed and sealed by Scott Wolters, P.E.*

D. QUALITY ASSURANCE

1. *By Miami-Dade County Building Code Compliance Office.*

E. MATERIAL CERTIFICATIONS

1. *None.*

Helmy A. Makar, P.E., M.S.
Product Control Unit Supervisor
NOA No. 12-0820.04
Expiration Date: 08/29/2014
Approval Date: 03/07/2013

NOTICE OF ACCEPTANCE: EVIDENCE SUBMITTED

5. EVIDENCE SUBMITTED UNDER PREVIOUS APPROVAL # 09-0427.02

A. DRAWINGS

1. None.

B. TESTS

1. None.

C. CALCULATIONS

1. None.

D. QUALITY ASSURANCE

1. By Miami-Dade County Building Code Compliance Office.

E. MATERIAL CERTIFICATIONS

1. None.

6. NEW EVIDENCE SUBMITTED

A. DRAWINGS

1. Drawing No. F12, titled " Force 12 Flexible Wind Abatement Screen System ", sheets D1 through D15 of D15, last revision #3 dated April 19, 2012, signed & sealed by James R. Bailey, P.E., on July 27, 2012.

B. TESTS

1. None.

C. CALCULATIONS

1. None.

D. QUALITY ASSURANCE

1. By Miami-Dade County Department of Regulatory and Economic Resources.

E. MATERIAL CERTIFICATIONS

1. None.

Helmy A. Makar, P.E., M.S.
Product Control Unit Supervisor
NOA No. 12-0820.04
Expiration Date: 08/29/2014
Approval Date: 03/07/2013

FORCE 12

FLEXIBLE WIND ABATEMENT SCREEN SYSTEM

GENERAL NOTES

1. THIS PRODUCT IS DESIGNED TO MEET THE REQUIREMENTS OF MIAMI–DADE AND THE FLORIDA BUILDING CODE 2010 EDITION.
2. GLASS SEPARATION WILL BE REQUIRED (SEE TABLE 3 SHEET D15).
3. WOOD FRAMING MEMBERS BY OTHERS, MUST BE ANCHORED PROPERLY TO TRANSFER LOADS TO THE STRUCTURE. WOOD FRAMING MEMBERS SHALL BE "SOUTHERN PINE" WITH G=0.55 OR GREATER DENSITY.
4. PRODUCT ANCHORS SHALL BE AS LISTED AND SPACED AS SHOWN ON DETAILS. ANCHOR EMBEDMENT TO BASE MATERIAL SHALL BE BEYOND WALL DRESSING OR STUCCO.
5. DESIGN PRESSURE RATING: SEE CHART BELOW.
6. THE DETAILS AND SPECIFICATIONS SHOWN HEREIN REPRESENT THE PRODUCT TESTED FOR IMPACT, CYCLIC, AND UNIFORM STATIC AIR PRESSURE TESTING IN COMFORMANCE WITH MIAMI–DADE COUNTY PROTOCOLS TAS–201, 203 & 202. REFERENCE NATIONAL CERTIFIED TESTING LABORATORIES REPORT NCTL 210–2310–1,2,3

HURRICANE SCREEN CONSTRUCTION
(COMMON TO ALL CONDITIONS)

SCREEN & SCREEN TRACK CONSTRUCTION:

SCREEN:

THE SCREEN IS MANUFACTURED FROM A WOVEN POLYPROPYLENE MONOFILAMENT GEOTEXTILE FABRIC

SCREEN CONFIGURATION:

THE SCREEN IS MANUFACTURED IN (3) STYLES, VERTICAL SEAM, HORIZONTAL SEAM & NON–SEAMED OVERLAPPED FABRIC PANELS. THE MAXIMUM PANEL HEIGHT IS 12'–0".

THE SCREEN IS MANUFACTURED FROM A WOVEN POLYPROPYLENE MONOFILAMENT GEOTEXTILE FABRIC WITH INDIVIDUAL FILAMENTS WOVEN INTO A BASKET WEAVE NETWORK AND CALENDERED SUCH THAT THE FILAMENTS RETAIN DIMENSIONAL STABILITY RELATIVE TO EACH OTHER.

SCREEN TRACK:

THE SCREEN TRACK IS EXTRUDED FROM 6063–T6 ALUMINUM.

DESIGN PRESSURE RATING	
POSITIVE	+ 60.0 psf
NEGATIVE	– 60.0 psf

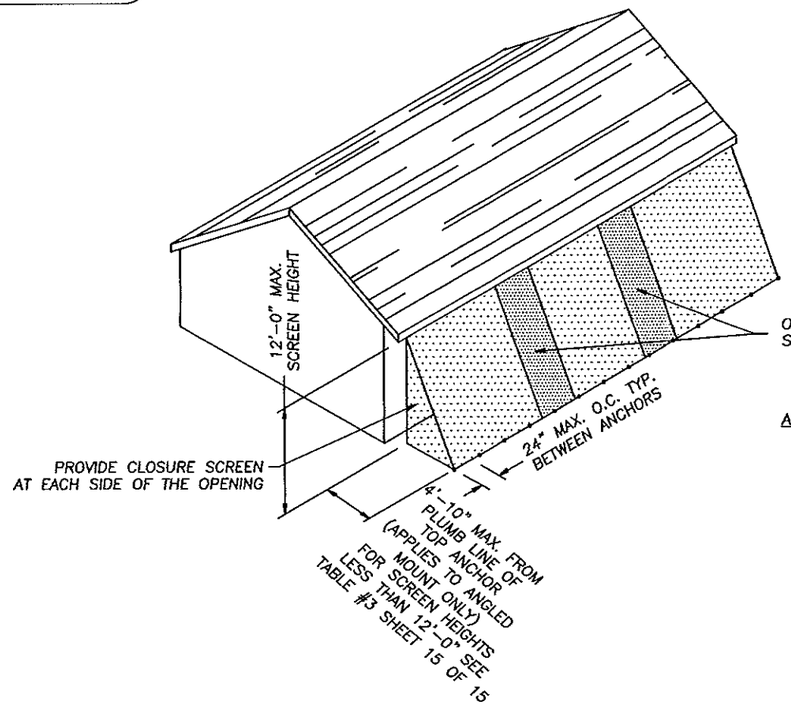

ELEVATION #1
ANGLED SCREEN MOUNT
SEE SHT. 2

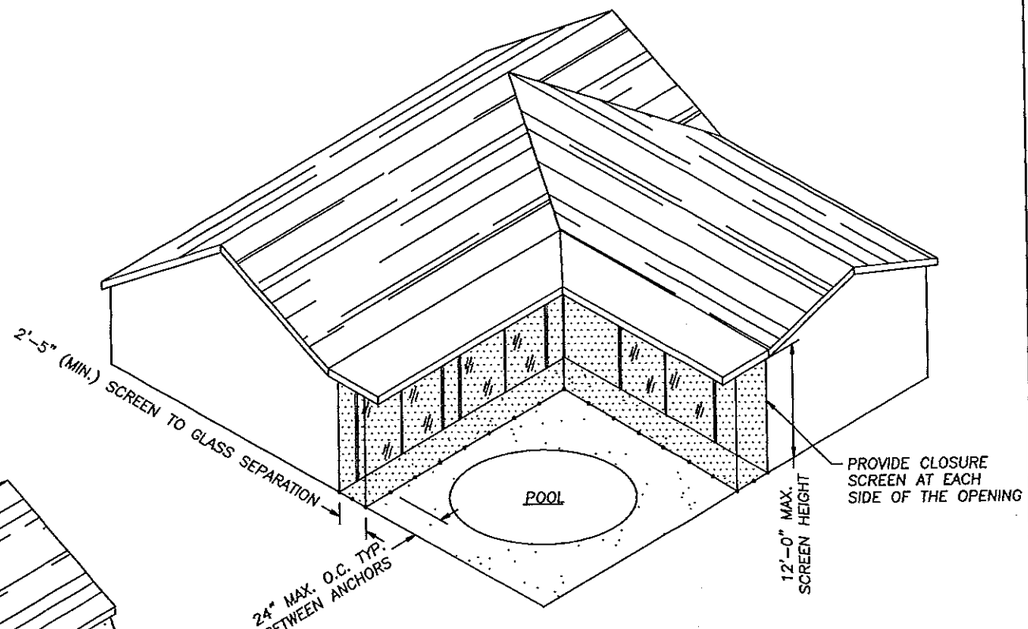

ELEVATION #2
STRAIGHT DROP SCREEN MOUNT
SEE SHT. 4

PRODUCT REVISED
as complying with the Florida
Building Code
Acceptance No 12-0820.04
Expiration Date 08/29/2014
By
Miami Dade Product Control

7/27/12

JAMES R. BAILEY LICENSE No 67773 STATE OF FLORIDA PROFESSIONAL ENGINEER

Hendee Enterprises, Inc.
The Innovative Solutions Company
P.O. Box 4259, Houston, TX 77210–4259 6330 South Park Dr., Houston, TX 77054
(713) 790–2332, Fax (713) 790–0464, (800) 231–7577 (WATS), (800) 323–7941 (Texas)

EXPORT WARNING:
EXPORT OF THIS DOCUMENT TO COUNTRIES OTHER THAN U.S. IS SUBJECT TO U.S. EXPORT ADMINISTRATION REGULATIONS.

COPYRIGHT
COPYRIGHT © 2002
HENDEE ENTERPRISES INC.
ALL RIGHTS RESERVED

CONSULTANTS:

James R. Bailey, P.E.
FL PE #67773
Platinum Risk Consulting, LLC
4931 Chappel Hill Dr.
Missouri City, TX 77459
(281) 403–2825
FL. COA #28516

BY:	NO:	DATE	DESCRIPTION
KM	3	04/19/12	2010 BUILDING CODE COMPLIANCE REVIEW

THIS DOCUMENT, CONSISTING OF CONTENTS, AND THOSE GRAPHICAL REPRESENTATIONS, IS THE PROPERTY OF HENDEE ENTERPRISES INC. AND IS NOT TO BE USED IN WHOLE OR IN PART FOR ANY PURPOSE OTHER THAN THAT FOR WHICH IT IS SPECIFICALLY PREPARED AND DELIVERED, AND IS NOT TO BE COPIED OR REPRODUCED IN ANY FORM OR MEDIUM WHATSOEVER, IN WHOLE OR IN PART, WITHOUT THE PRIOR WRITTEN PERMISSION OF HENDEE ENTERPRISES INC. ANY USE OF THIS DOCUMENT IS GOVERNED BY AND SUBJECT TO THE TERMS AND CONDITIONS OF THE HENDEE ENTERPRISES INC. STANDARD SALES AGREEMENT. ANY USE OF THIS DOCUMENT IN VIOLATION OF THE AGREEMENT IS EXPRESSLY PROHIBITED AND MAY RESULT IN SEVERE CIVIL AND CRIMINAL PENALTIES. IN THE EVENT OF ANY UNAUTHORIZED USE OF THIS DOCUMENT, HENDEE ENTERPRISES INC. DISCLAIMS ANY AND ALL LIABILITY FOR ANY DIRECT, INDIRECT, CONSEQUENTIAL OR INCIDENTAL DAMAGES THAT MAY RESULT FROM SUCH USE.

CHECKED BY:	
DRAWN BY:	AD
FILE NAME:	FORCE 12
JOB NUMBER:	N/A
DOCUMENT DATE:	03/16/09

SHEET: D1

CLIENT: HENDEE ENTERPRISES
LOCATION: HOUSTON, TX
TITLE: FORCE 12 – SERIES 500 – STRAP & BUCKLE
DATE: 04/19/12
REVISION: 3

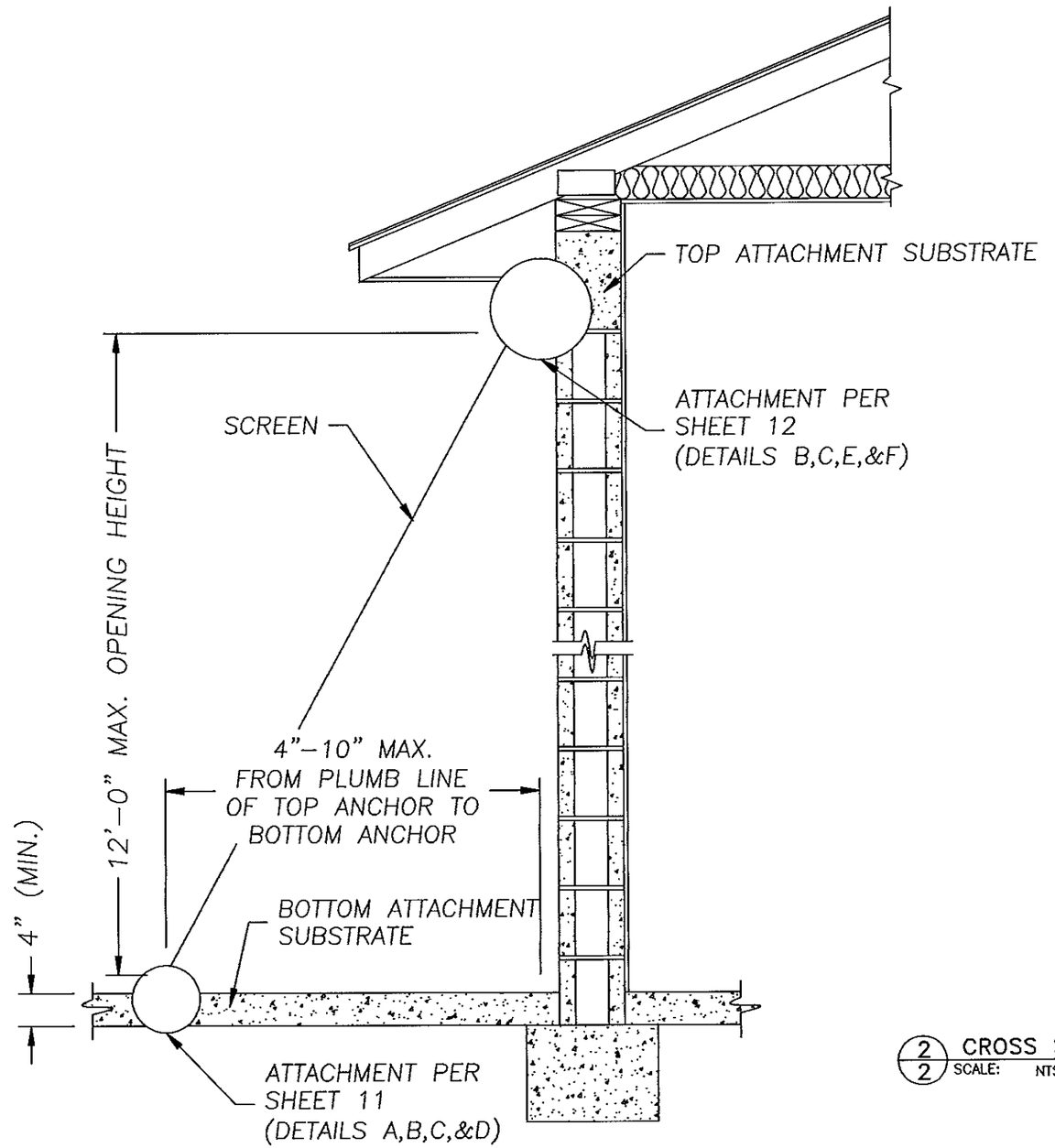

1/2 SECTION VIEW OF ANGLE MOUNTED SCREEN
SCALE: NTS =1'-0"

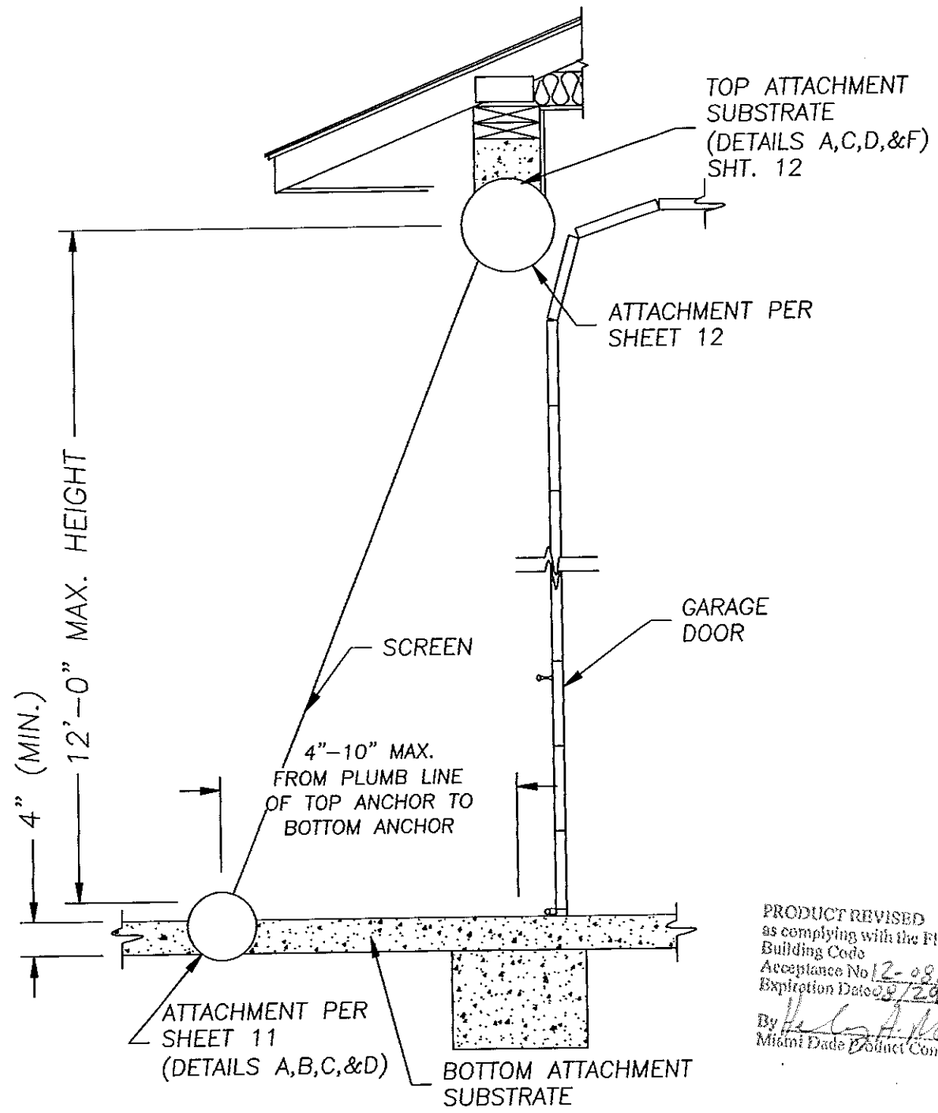

2/2 CROSS SECTION OF ANG. MOUNTED SCREEN (SIDE VIEW/GARAGE DOOR)
SCALE: NTS =1'-0"

PRODUCT REVISED
as complying with the Florida Building Code
Acceptance No 12-0820.04
Expiration Date 08/29/2014
By [signature]
Miami Dade Product Control

JAMES R. BAILEY
LICENSE
No 67773
STATE OF FLORIDA
PROFESSIONAL ENGINEER

[signature]
7/27/12

Hendee Enterprises, Inc.
The Innovative Solutions Company
P.O. Box 4259, Houston, TX 77210-4259 9330 South Dr., Houston, TX 77054
(713) 796-2332, Fax (713) 796-0494, (800) 231-7279 (Nat'l), (800) 323-3641 (Texas)

COPYRIGHT
COPYRIGHT © 2002
HENDEE ENTERPRISES, INC.
ALL RIGHTS RESERVED

EXPORT WARNING:
EXPORT OF THIS DOCUMENT TO COUNTRIES OUTSIDE OF THE U.S. IS SUBJECT TO U.S. EXPORT ADMINISTRATION REGULATIONS.

CONSULTANTS:
James R. Bailey, P.E.
FL PE #67773
Platinum Risk Consulting LLC
4931 Chappel Hill Dr.
Missouri City, TX 77459
(281) 403-2825
FL. COA #28516

CLIENT: HENDEE ENTERPRISES
LOCATION: HOUSTON, TX
TITLE: FORCE 12 - SERIES 500 - STRAP & BUCKLE
DATE: 04/19/12
REVISION: 3

BY:	REV.	DATE	DESCRIPTION
KL	3	04/19/12	2010 BUILDING CODE COMPLIANCE REVIEW

THIS DOCUMENT, CONTAINING CONTENTS, AND THE SOFTWARE DISPLAYING IT, IS THE PROPERTY OF HENDEE ENTERPRISES, INC. IT IS TO BE USED ONLY FOR THE PURPOSE FOR WHICH IT IS SUBMITTED AND IS TO BE RETURNED UPON REQUEST. THIS DOCUMENT IS CONSIDERED AN UNPUBLISHED WORK AND MAY NOT BE DISCLOSED OR REPRODUCED IN WHOLE OR IN PART WITHOUT THE WRITTEN CONSENT OF HENDEE ENTERPRISES, INC. THIS DOCUMENT MAY NOT BE COPIED OR DISCLOSED, OR THINGS SHOWN THEREIN MAY NOT BE MADE, USED OR REPRODUCED FOR ANY PURPOSE OTHER THAN THAT AUTHORIZED BY HENDEE ENTERPRISES, INC. IN WRITING. UPON COMPLETION OF THE NEEDS TO WHICH THE DOCUMENT, OR UPON REQUEST, THE DOCUMENT AND ALL OTHER COPIES THEREOF AND ALL RELATED COPIES SHALL BE RETURNED TO HENDEE ENTERPRISES, INC.

CHECKED BY:	
DRAWN BY:	AD
FILE NAME:	FORCE 12
JOB NUMBER:	N/A
DOCUMENT DATE:	03/16/09

SHEET: D2

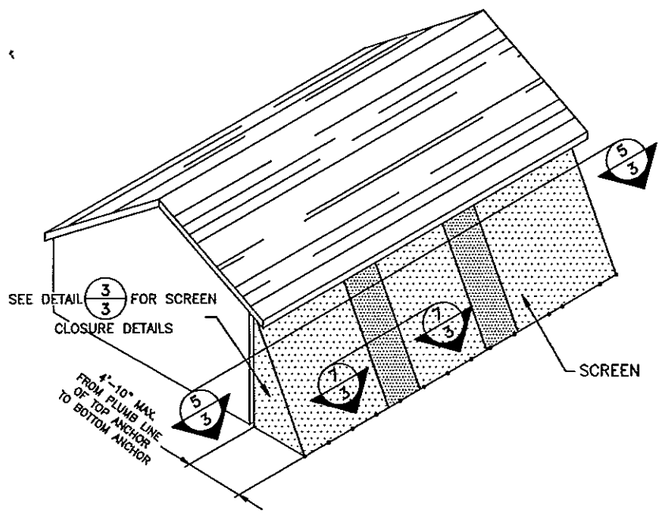

1/3 SCREEN WITH SIDE CLOSURE SCREEN
SCALE: NTS = 1'-0"

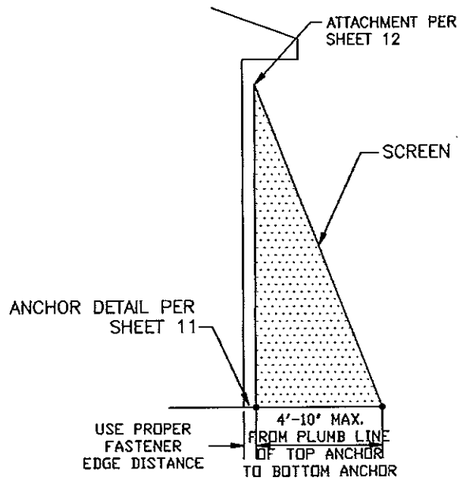

3/3 SIDE CLOSURE SCREEN
SCALE: NTS = 1'-0"

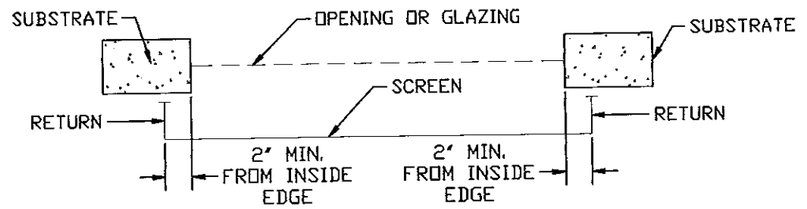

5/3 ANGLED SCREEN CLOSURE WITH RETURN (PLAN VIEW)
SCALE: NTS = 1'-0"

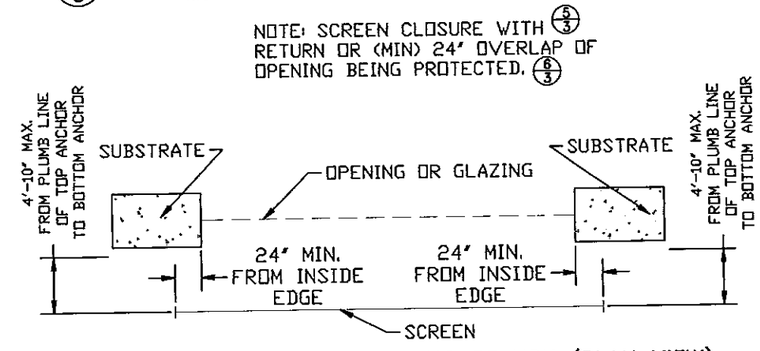

6/3 ANGLED SCREEN CLOSURE – NO RETURN (PLAN VIEW)
SCALE: NTS = 1'-0"

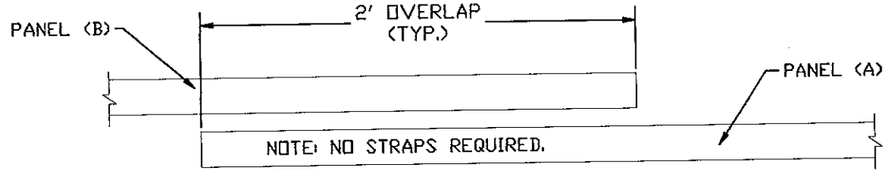

7/3 PANEL OVERLAP – SECTION
SCALE: NTS = 1'-0"

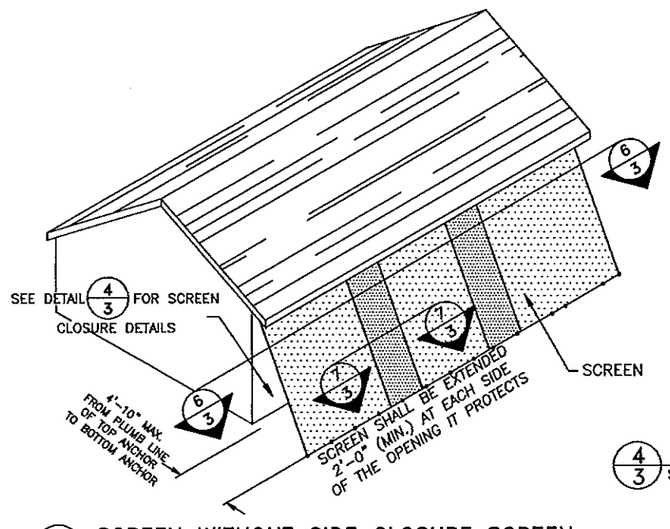

2/3 SCREEN WITHOUT SIDE CLOSURE SCREEN
SCALE: NTS = 1'-0"

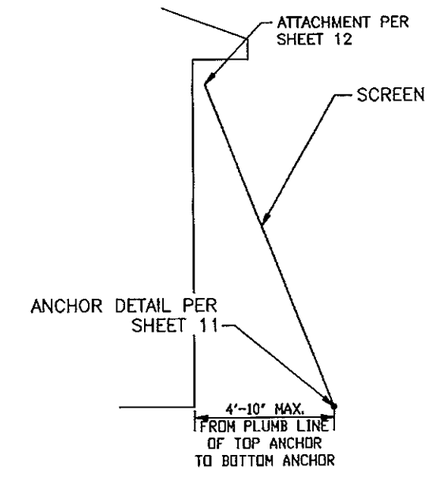

4/3 SIDE CLOSURE SCREEN – NO RETURN
SCALE: NTS = 1'-0"

PRODUCT REVISED
as complying with the Florida Building Code
Acceptance No 12-0820.04
Expiration Date 08/29/2014
By
Miami Dade Product Control

JAMES R. BAILEY
LICENSE
No 67773
STATE OF FLORIDA
PROFESSIONAL ENGINEER

7/27/12

Hendee Enterprises, Inc.
The Innovative Solutions Company
P.O. Box 4289, Houston, TX 77210-4289 (800) South 75th Houston, TX 77054
(713) 790-2332 Fax (713) 790-0464 (Intl.) (800) 323-2944 (Texas)

EXPORT WARNING:
EXPORT OF THIS EQUIPMENT TO COUNTRIES OTHER THAN U.S. IS SUBJECT TO U.S. EXPORT ADMINISTRATION REGULATIONS.

COPYRIGHT
COPYRIGHT © 2002
HENDEE ENTERPRISES INC.
ALL RIGHTS RESERVED

CONSULTANTS:
James R. Bailey, P.E.
FL PE #67773
Platinum Risk Consulting, LLC
4931 Chappel Hill Dr.
Missouri City, TX 77459
(281) 403-2825
FL. COA #28516

CLIENT: HENDEE ENTERPRISES
LOCATION: HOUSTON, TX
TITLE: FORCE 12 – SERIES 500 – STRAP & BUCKLE
DATE: 04/19/12
REVISION: 3

STR	REV	DATE	DESCRIPTION
	3	04/19/12	2010 BUILDING CODE COMPLIANCE REVIEW

THIS DOCUMENT, CONTAINING CONCEPTUAL AND TECHNICAL SECRET INFORMATION, IS THE PROPERTY OF HENDEE ENTERPRISES, INC. AND IS LOANED SUBJECT TO RETURN UPON DEMAND. IT IS NOT TO BE REPRODUCED IN ANY WAY, EXCEPT AS AGREED IN WRITING BY HENDEE ENTERPRISES, INC. THE INFORMATION HEREIN SHALL NOT BE DISCLOSED OUTSIDE THE RECIPIENT'S ORGANIZATION NOR USED IN ANY WAY DETRIMENTAL TO THE INTERESTS OF HENDEE ENTERPRISES, INC. BY ACCEPTANCE OF THIS DOCUMENT, THE RECIPIENT AGREES TO THE FOREGOING AND TO PROTECT THE SECRECY OF THE INFORMATION CONTAINED HEREIN. IF THIS DOCUMENT IS A COPY, THE ORIGINAL SHALL BE RETURNED UPON REQUEST. IF THIS DOCUMENT IS A COPY, ANY COPY OR REPRODUCTION OF THE SAME, IN WHOLE OR IN PART, SHALL BE DESTROYED UPON REQUEST. ACCEPTANCE OF THIS DOCUMENT CONSTITUTES AGREEMENT TO THE FOREGOING.

CHECKED BY:	
DRAWN BY:	AD
FILE NAME:	FORCE 12
JOB NUMBER:	N/A
DOCUMENT DATE:	03/16/09

SHEET: D3

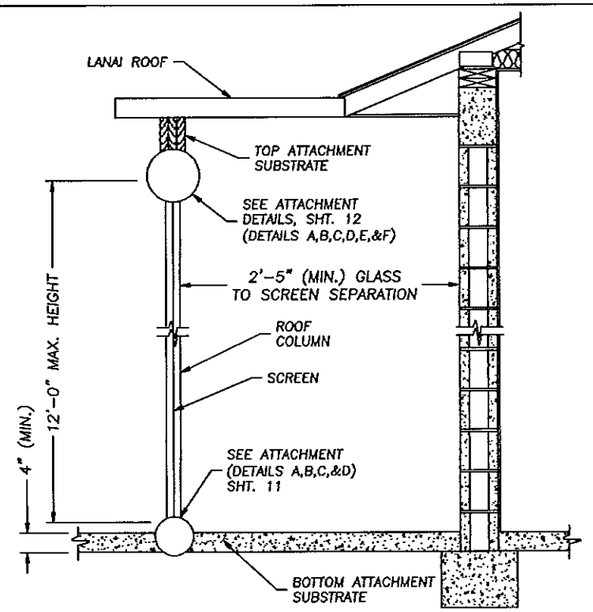

1/4 CROSS SECTION OF VERT. MOUNTED STRAIGHT DROP SCREEN (SIDE VIEW)/LANAI
SCALE: NTS=1'-0"

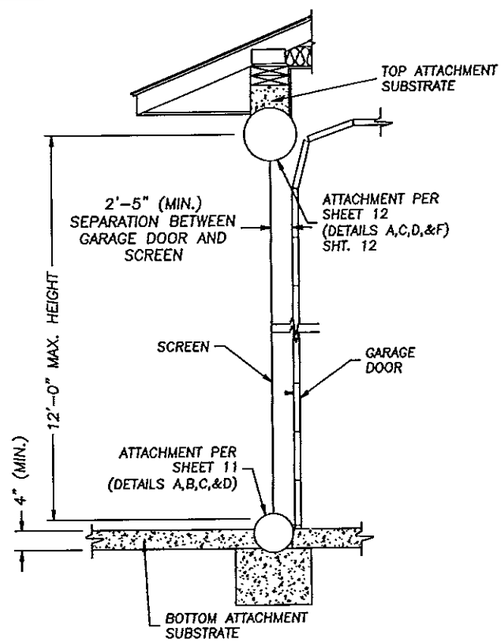

2/4 CROSS SECTION OF VERT. MOUNTED STRAIGHT DROP SCREEN (SIDE VIEW/GARAGE DOOR)
SCALE: NTS=1'-0"

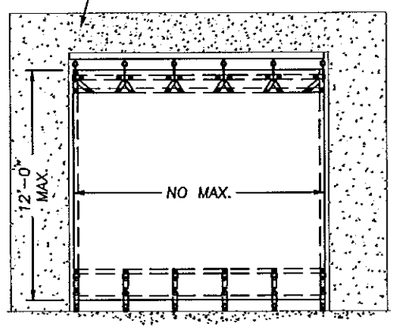

3/4 VERT. MOUNTED STRAIGHT DROP SCREEN (ELEVATION)
SCALE: NTS=1'-0"

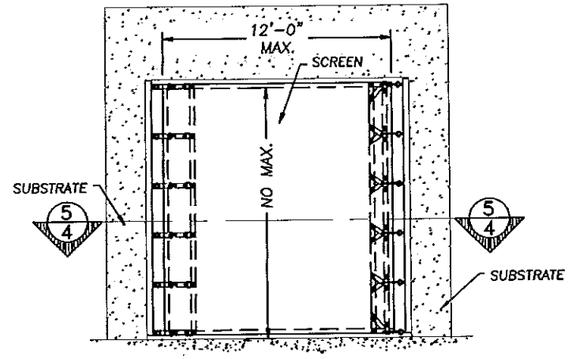

4/4 HOR. MOUNTED STRAIGHT DROP SCREEN (ELEVATION)
SCALE: NTS=1'-0"

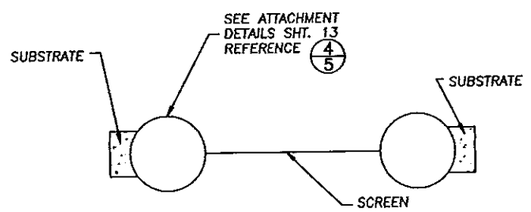

**IF THE SUBSTRATE IS NOT A CONTINOUS LATERALLY-SUPPORTED WALL MADE OF STRUCTURAL TIMBER FRAMING, RE-ENFORCED CONCRETE, OR RE-ENOFORCED CONCRETE BLOCK OR THE SUBSTRATE IS A COLUMN WITHOUT INTERMEDIATE LATERAL SUPPORT, THEN A LICENSED PROFESSIONAL ENGINEER IS TO DETERMINE IF COLUMN/SUBSTRATE CAN RESIST APPLIED LOADS FROM THE SCREEN AS REQUIRED BY CODE.

5/4 SECTION OF HOR. MOUNTED STRAIGHT DROP SCREEN (PLAN VIEW)
SCALE: NTS=1'-0"

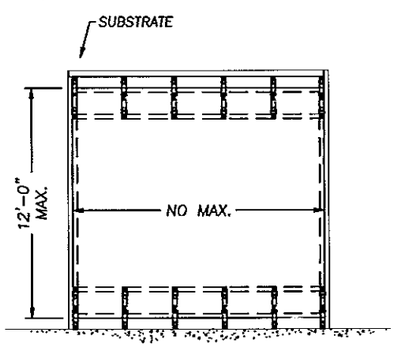

3.1/4 VERT. MOUNTED STRAP AND BUCKLE (ELEVATION) OPTION 2
SCALE: NTS=1'-0"

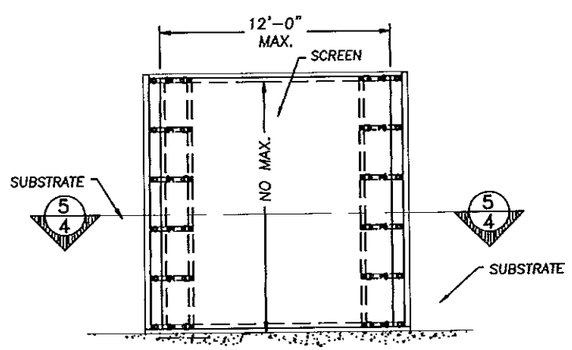

4.1/4 HOR. MOUNTED STRAP AND BUCKLE (ELEVATION) OPTION 2
SCALE: NTS=1'-0"

PRODUCT REVISED
as complying with the Florida
Building Code
Acceptance No 12-0820.04
Expiration Date 08/29/2014
By
Miami Dade Product Control

7/21/12

JAMES R. BAILEY LICENSE No 67773 STATE OF FLORIDA PROFESSIONAL ENGINEER

Hendee Enterprises, Inc.
The Innovative Solutions Company
P.O. Box 4258, Houston, TX 77210-4258 (800) 231-7776 (Nat'l) (800) 323-5841
(713) 780-2262 Fax (713) 780-4464 (Texas)

EXPORT WARNING:
COPIES OF THIS DOCUMENT TO COUNTRIES OTHER THAN U.S. IS SUBJECT TO U.S. EXPORT ADMINISTRATION REGULATIONS.

COPYRIGHT
COPYRIGHT © 2002
HENDEE ENTERPRISES INC.
ALL RIGHTS RESERVED

CONSULTANTS:
James R. Bailey, P.E.
FL PE #67773
Platinum Risk Consulting, LLC
4931 Chappel Hill Dr.
Missouri City, TX 77459
(281) 403-2825
FL COA #28516

CLIENT: HENDEE ENTERPRISES
LOCATION: HOUSTON, TX
TITLE: FORCE 12 - SERIES 500 - STRAP & BUCKLE
DATE: 04/19/12
REVISION: 3

BY:	REV	DATE	DESCRIPTION
KML	3	04/19/12	2010 BUILDING CODE COMPLIANCE REVIEW

THIS DOCUMENT, CONTAINING CONCEPTIONS, AND TRADE SECRET INFORMATION, IS THE PROPERTY OF HENDEE ENTERPRISES, INC. AND IS LOANED SUBJECT TO RETURN UPON REQUEST. THIS DOCUMENT IS NOT TO BE REPRODUCED, SHOWN OR DISCLOSED TO ANY UNAUTHORIZED PERSON WITHOUT THE WRITTEN CONSENT OF, AND WITH ANY REPRODUCTION OR DISCLOSURE TO BEAR THE COPYRIGHT NOTICE OF, HENDEE ENTERPRISES, INC. IT IS NOT TO BE USED IN WHOLE OR IN PART FOR ANY PROJECT OTHER THAN THAT FOR WHICH IT IS EXPRESSLY LOANED. BY ACCEPTANCE OF THIS DOCUMENT, THE BORROWER AGREES TO BE BOUND BY THE FOREGOING STATEMENT.

CHECKED BY:	
DRAWN BY:	AD
FILE NAME:	FORCE 12
JOB NUMBER:	N/A
DOCUMENT DATE:	03/16/09

SHEET: D4

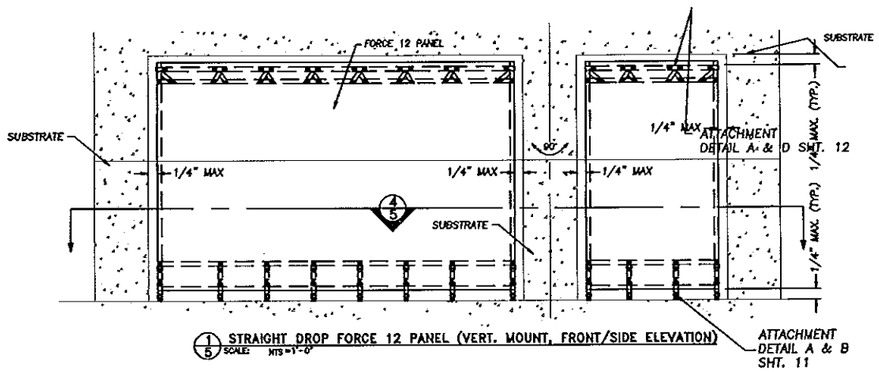

1/5 STRAIGHT DROP FORCE 12 PANEL (VERT. MOUNT, FRONT/SIDE ELEVATION) SCALE: NTS=1'-0"

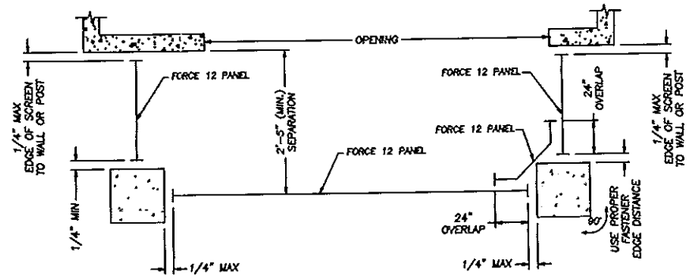

4/5 STRAIGHT DROP FORCE 12 PANEL INSIDE OF WALLS/POST (PLAN) SCALE NTS=1'-0"

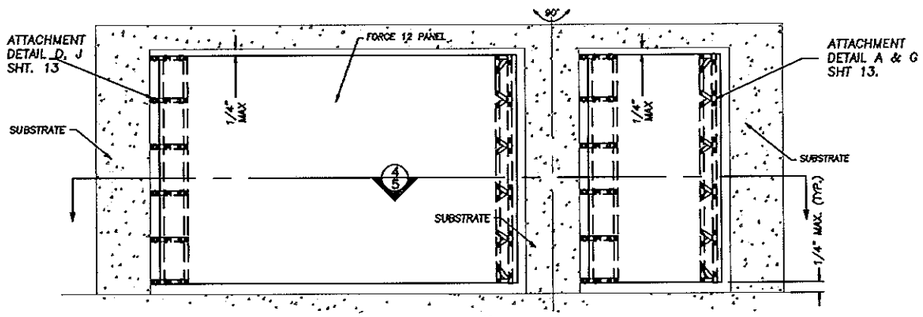

2/5 STRAIGHT DROP FORCE 12 PANEL (HOR. MOUNT, FRONT/SIDE ELEVATION) SCALE NTS=1'-0"

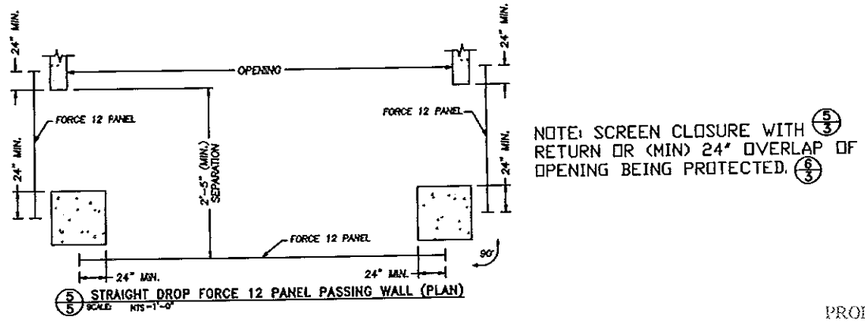

5/5 STRAIGHT DROP FORCE 12 PANEL PASSING WALL (PLAN) SCALE NTS=1'-0"

NOTE: SCREEN CLOSURE WITH 5/3 RETURN OR (MIN) 24" OVERLAP OF OPENING BEING PROTECTED. 6/3

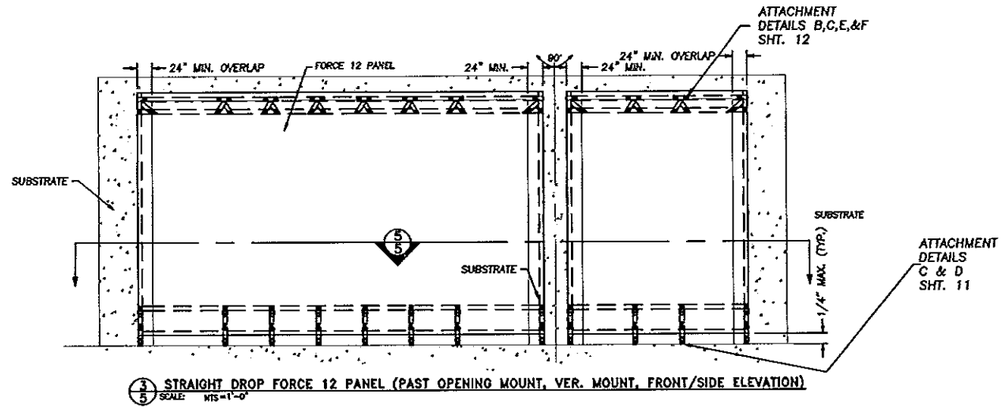

3/5 STRAIGHT DROP FORCE 12 PANEL (PAST OPENING MOUNT, VER. MOUNT, FRONT/SIDE ELEVATION) SCALE NTS=1'-0"

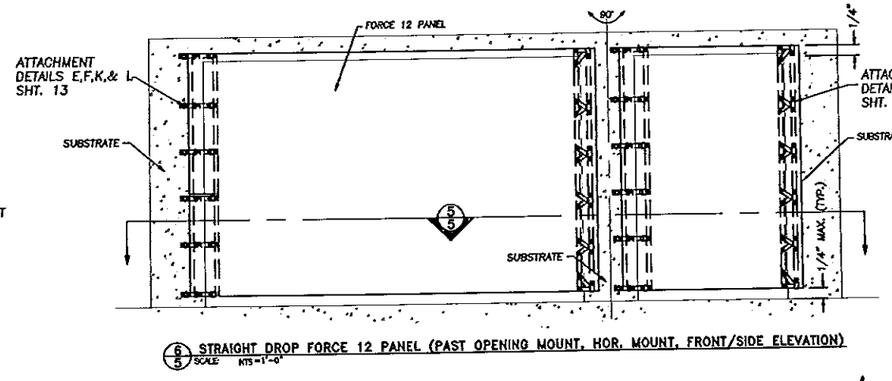

6/5 STRAIGHT DROP FORCE 12 PANEL (PAST OPENING MOUNT, HOR. MOUNT, FRONT/SIDE ELEVATION) SCALE NTS=1'-0"

PRODUCT REVISED
as complying with the Florida
Building Code
Acceptance No 12-0820.04
Expiration Date 08/29/2014
By
Miami Dade Product Control

7/22/12

JAMES R. BAILEY LICENSE No 67773 STATE OF FLORIDA PROFESSIONAL ENGINEER

Hendee Enterprises, Inc.
The Aristocrat Solutions Company
P.O. Box 4288, Houston, TX 77210-4288 (713) 799-3302 Fax (713) 799-3482
2700 South Post Oak, Houston, TX 77056 (800) 231-7225 (Nat'l), (800) 323-3441 (Texas)

EXPORT WARNING
EXPORT OF THIS DOCUMENT TO COUNTRIES OUTSIDE OF THE U.S. IS SUBJECT TO U.S. EXPORT ADMINISTRATION REGULATIONS.

COPYRIGHT
COPYRIGHT © 2002
HENDEE ENTERPRISES INC.
ALL RIGHTS RESERVED

CONSULTANTS:
James R. Bailey, P.E.
FL PE #67773
Platinum Risk Consulting, LLC
4931 Chapel Hill Dr.
Missouri City, TX 77459
(281) 403-2825
FL. COA #28516

CLIENT: HENDEE ENTERPRISES
LOCATION: HOUSTON, TX
TITLE: FORCE 12 - SERIES 500 - STRAP & BUCKLE
DATE: 04/19/12
REVISION: 3

BY:	REV	DATE	DESCRIPTION
DTL	3	04/19/12	2010 BUILDING CODE COMPLIANCE REVIEW

THIS DOCUMENT, CONTAINED DRAWINGS, AND THOSE CERTAIN INFORMATION, IS THE PROPERTY OF HENDEE ENTERPRISES, INC. AND IS TO BE USED ONLY FOR THE PROJECT AND SPECIFIC PURPOSE FOR WHICH IT WAS PREPARED AND PUBLISHED. NO PART OF THIS DOCUMENT IS TO BE COPIED, OR ANY REPRODUCTION MADE BY ANY MEANS WHATSOEVER, NOR TRANSMITTED TO OR DISCLOSED IN ANY FORM TO ANY PERSON, FIRM OR CORPORATION WITHOUT THE PRIOR WRITTEN CONSENT OF HENDEE ENTERPRISES, INC. ANY REPRODUCTION OF THIS DOCUMENT, IN PART OR IN WHOLE, WITHOUT THE CONSENT OF HENDEE ENTERPRISES, INC. WILL BE SUBJECT TO LEGAL ACTION AND PROSECUTION TO THE FULLEST EXTENT OF THE LAW.

CHECKED BY:	
DRAWN BY:	AD
FILE NAME:	FORCE 12
JOB NUMBER:	N/A
DOCUMENT DATE:	03/16/09

SHEET: D5

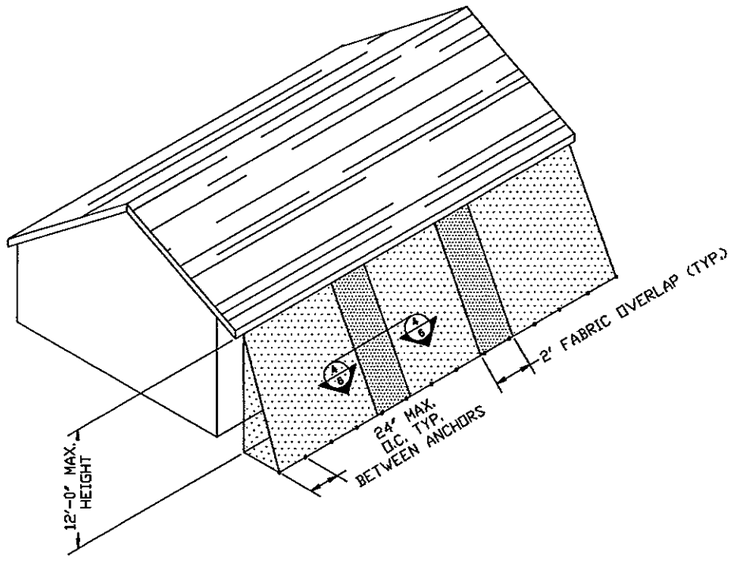

1/6 ANGLED SCREEN OVERLAP – IN APPLICATION
SCALE: NTS = 1'-0"

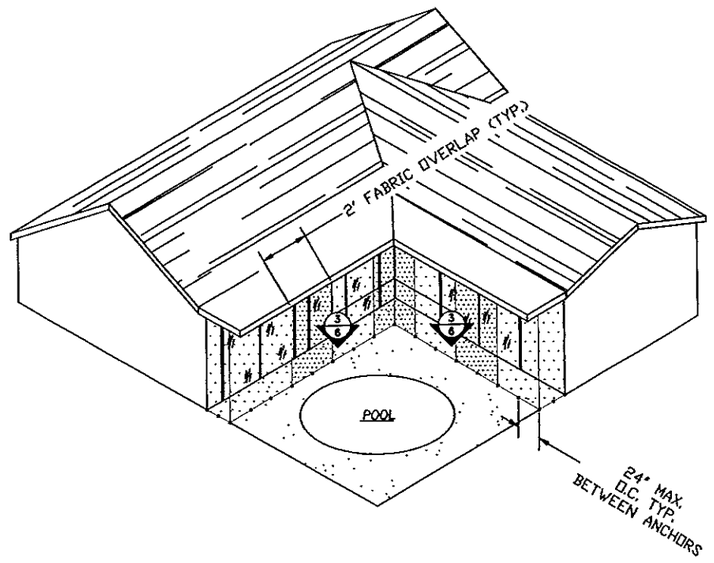

2/6 VERTICAL SCREEN CORNER OVERLAP – IN APPLICATION
SCALE: NTS = 1'-0"

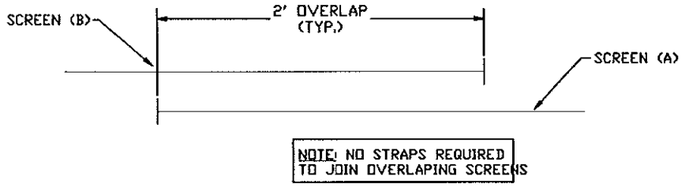

4/6 SCREEN OVERLAP – SECTION
SCALE: NTS = 1'-0"

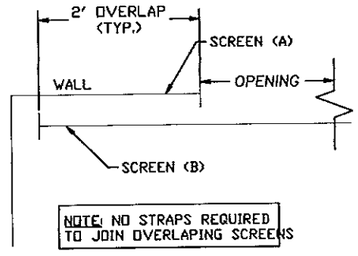

3/6 CORNER PANEL OVERLAP (PLAN VIEW)
SCALE: NTS = 1'-0"

PRODUCT REVISED
as complying with the Florida
Building Code
Acceptance No 12-0820.04
Expiration Date 08/29/2014
By
Miami Dade Product Control

JAMES R. BAILEY
LICENSE
No 67773
STATE OF
FLORIDA
PROFESSIONAL ENGINEER

7/27/12

Hendee Enterprises, Inc.
The Innovative Solutions Company
P.O. Box 4280, Houston, TX 77210-4280 9300 South Point Dr., Houston, TX 77054
(713) 748-2222 Fax (713) 790-4484 (800) 231-2275 (toll) (800) 322-3641 (Texas)

COPYRIGHT
COPYRIGHT © 2002
HENDEE ENTERPRISES INC.
ALL RIGHTS RESERVED

EXPORT WARNING
EXPORT OF THIS DOCUMENT TO COUNTRIES OUTSIDE U.S. IS SUBJECT TO U.S. EXPORT ADMINISTRATION REGULATIONS.

CONSULTANTS:
James R. Bailey, P.E.
FL PE #67773
Platinum Risk Consulting, LLC
4931 Chappel Hill Dr.
Missouri City, TX 77459
(281) 403-2825
FL. COA #28516

BY:	REV.:	DATE:	DESCRIPTION
KLL	3	04/19/12	2010 BUILDING CODE COMPLIANCE REVIEW

CLIENT: HENDEE ENTERPRISES
LOCATION: HOUSTON, TX
TITLE: FORCE 12 – SERIES 500 – STRAP & BUCKLE
DATE: 04/19/12
REVISION: 3

CHECKED BY:
DRAWN BY: AD
FILE NAME: FORCE 12
JOB NUMBER: N/A
DOCUMENT DATE: 03/16/09

SHEET: D6

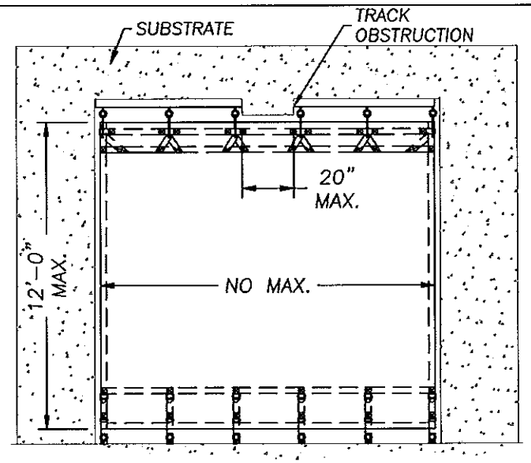

1/7 VERT. OR ANG. MOUNTED SCREEN W/ TRACK OBSTRUCTION (ELEVATION)
SCALE: NTS = 1'-0"

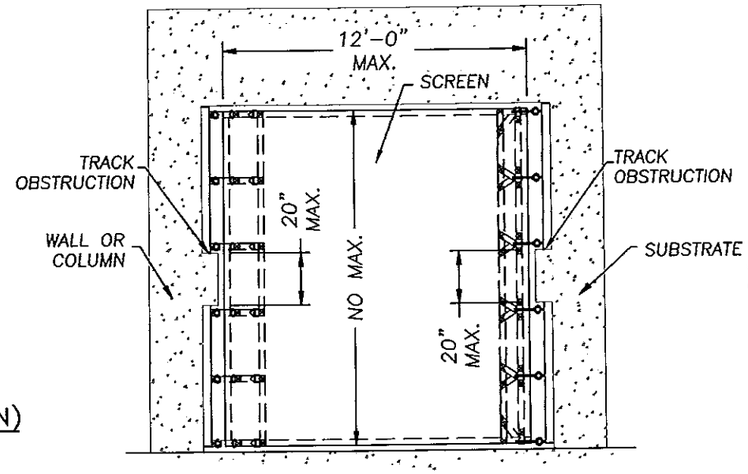

2/7 HOR. MOUNTED SCREEN W/TRACK OBSTRUCTION (ELEVATION)
SCALE: NTS = 1'-0"

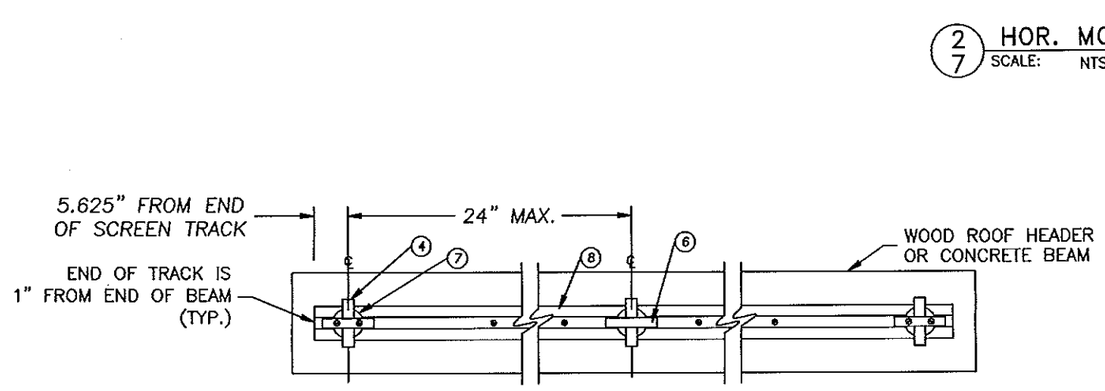

3/7 PLAN VIEW (LOOKING UP) TOP VERTICAL MOUNTING IN WOOD OR CONCRETE
SCALE: NTS = 1'-0"

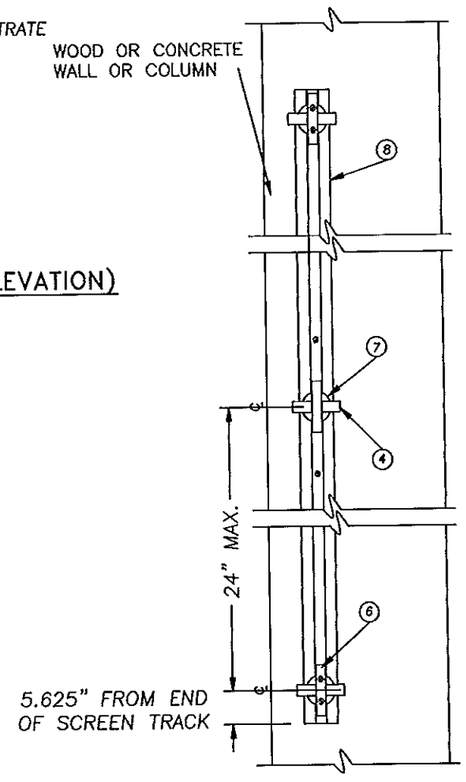

4/7 ELEVATION AT LEFT OR RIGHT SIDE MOUNTING IN WOOD OR CONCRETE
SCALE: NTS = 1'-0"

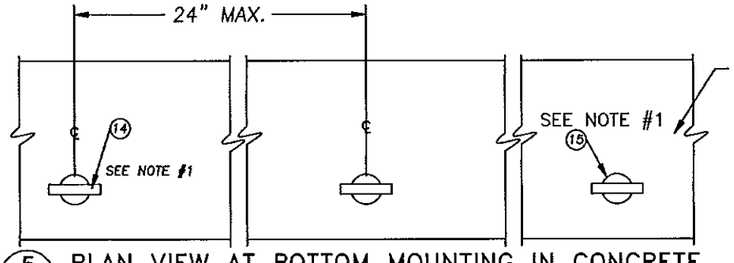

5/7 PLAN VIEW AT BOTTOM MOUNTING IN CONCRETE
SCALE: NTS = 1'-0"

NOTES:
1. ITEMS #14 & #15 ARE USED WHEN MOUNTING SCREEN BOTTOM TO CONCRETE.

PRODUCT REVISED
as complying with the Florida
Building Code
Acceptance No 12-0820.04
Expiration Date 08/29/2014
By
Miami Dade Product Control

7/27/12

JAMES R. BAILEY LICENSE No 67773 STATE OF FLORIDA PROFESSIONAL ENGINEER

Hendee Enterprises, Inc.
The Innovative Solutions Company
P.O. Box 4250, Houston, TX 77210-4250 (800) 231-7228 (Intl'l), (800) 323-3941
(713) 780-2202, Fax (713) 780-4464 (Texas)

EXPORT WARNING
EXPORT OF THESE DOCUMENTS TO COUNTRIES OUTSIDE THE U.S. IS SUBJECT TO U.S. EXPORT ADMINISTRATION REGULATIONS.

COPYRIGHT
COPYRIGHT © 2002
HENDEE ENTERPRISES INC.
ALL RIGHTS RESERVED

CONSULTANTS:
James R. Bailey, P.E.
FL PE #67773
Platinum Risk Consulting, LLC
4931 Chappell Hill Dr.
Missouri City, TX 77459
(281) 403-2825
FL. COA #28516

CLIENT: HENDEE ENTERPRISES
LOCATION: HOUSTON, TX
TITLE: FORCE 12 - SERIES 500 - STRAP & BUCKLE
DATE: 04/19/12
REVISION: 3

BY	REV'd	DATE	DESCRIPTION
KLL	3	04/19/12	2010 BUILDING CODE COMPLIANCE REVIEW

THIS DOCUMENT, CONTAINED CONCEPTS, AND DESIGNS ARE THE PROPERTY OF HENDEE ENTERPRISES, INC. AND SHALL NOT BE REPRODUCED, PUBLISHED OR USED IN ANY WAY WITHOUT THE PERMISSION OF HENDEE ENTERPRISES, INC. THIS DOCUMENT IS A COMPILATION OF MANY ELEMENTS, SOME OF WHICH ARE PROPRIETARY TO OTHERS. IF THIS COPY HAS NOT BEEN THE SUBJECT OF ANY COPYRIGHT NOTICE BY HENDEE ENTERPRISES, INC., IT WILL ONLY BE USED FOR THE EXPRESS PURPOSE FOR WHICH IT WAS PREPARED AND MAY NOT BE COPIED OR USED IN ANY MANNER WHATSOEVER WITHOUT THE PRIOR WRITTEN AUTHORIZATION OF HENDEE ENTERPRISES, INC. IF THIS COPY HAS BEEN THE SUBJECT OF A COPYRIGHT NOTICE BY HENDEE ENTERPRISES, INC., THEN THE FOLLOWING APPLIES: COPYRIGHT © 2002 HENDEE ENTERPRISES, INC. ALL RIGHTS RESERVED. THIS DOCUMENT, OR ANY PORTION OF IT, MAY NOT BE COPIED OR USED IN ANY MANNER WHATSOEVER WITHOUT THE PRIOR WRITTEN AUTHORIZATION OF HENDEE ENTERPRISES, INC. EXCEPT AS PROVIDED BELOW. ANY DATA CONTAINED IN THIS DOCUMENT MAY BE USED IN THE CONSTRUCTION OF ONE (1) PROJECT BY THE OWNER OF THAT PROJECT, BUT ONLY IF HENDEE ENTERPRISES, INC. IS PAID IN FULL FOR THIS DOCUMENT. ANY USE OF THIS DOCUMENT FOR ANY PURPOSE OTHER THAN THE CONSTRUCTION OF THE ONE (1) PROJECT FOR WHICH IT WAS PREPARED, OR ANY USE BY ANY PERSON OTHER THAN THE OWNER OF THAT PROJECT, IS PROHIBITED AND IS AT THE USER'S SOLE RISK AND WITHOUT LIABILITY TO HENDEE ENTERPRISES, INC. AND THE USER SHALL INDEMNIFY AND HOLD HARMLESS HENDEE ENTERPRISES, INC. FROM ALL CLAIMS, DAMAGES, LOSSES AND EXPENSES ARISING OUT OF OR RESULTING THEREFROM.

CHECKED BY:	
DRAWN BY:	AD
FILE NAME:	FORCE 12
JOB NUMBER:	N/A
DOCUMENT DATE:	03/16/09

SHEET: D7

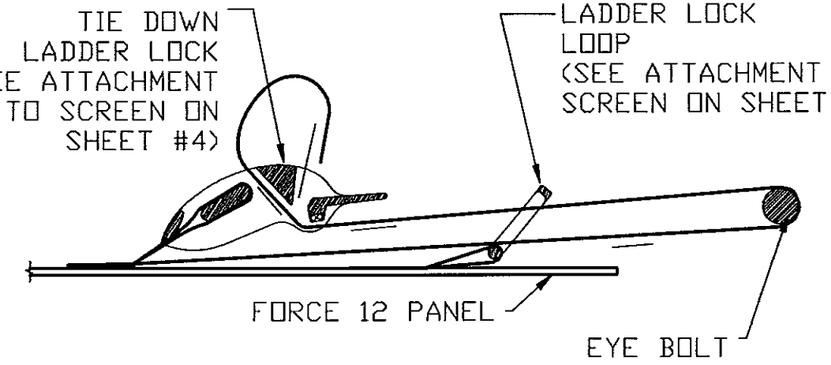

2 D1 STRAP PATH – THROUGH BUCKLE
SCALE: N.T.S. =1'–0"

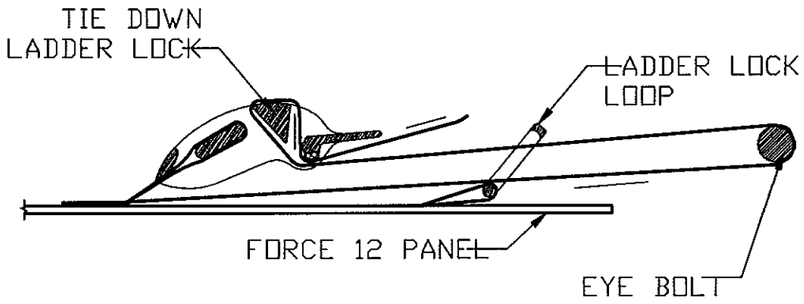

3 D1 STRAP PATH – TIGHTEN
SCALE: NTS =1'–0"

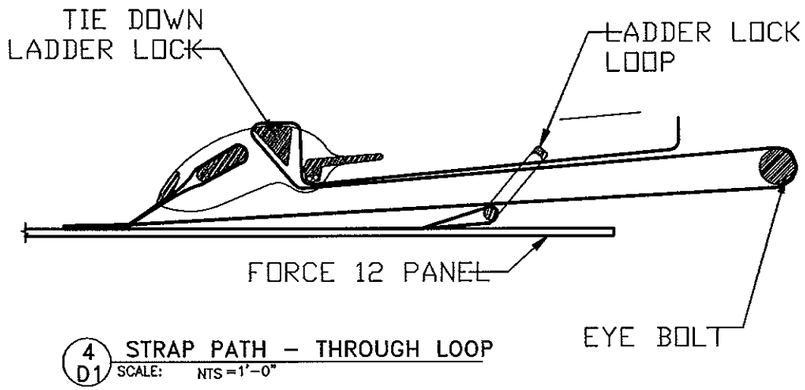

4 D1 STRAP PATH – THROUGH LOOP
SCALE: NTS =1'–0"

SCREEN ATTACHMENT STRAP DETAIL
AT THE BOTTOM OF SCREEN

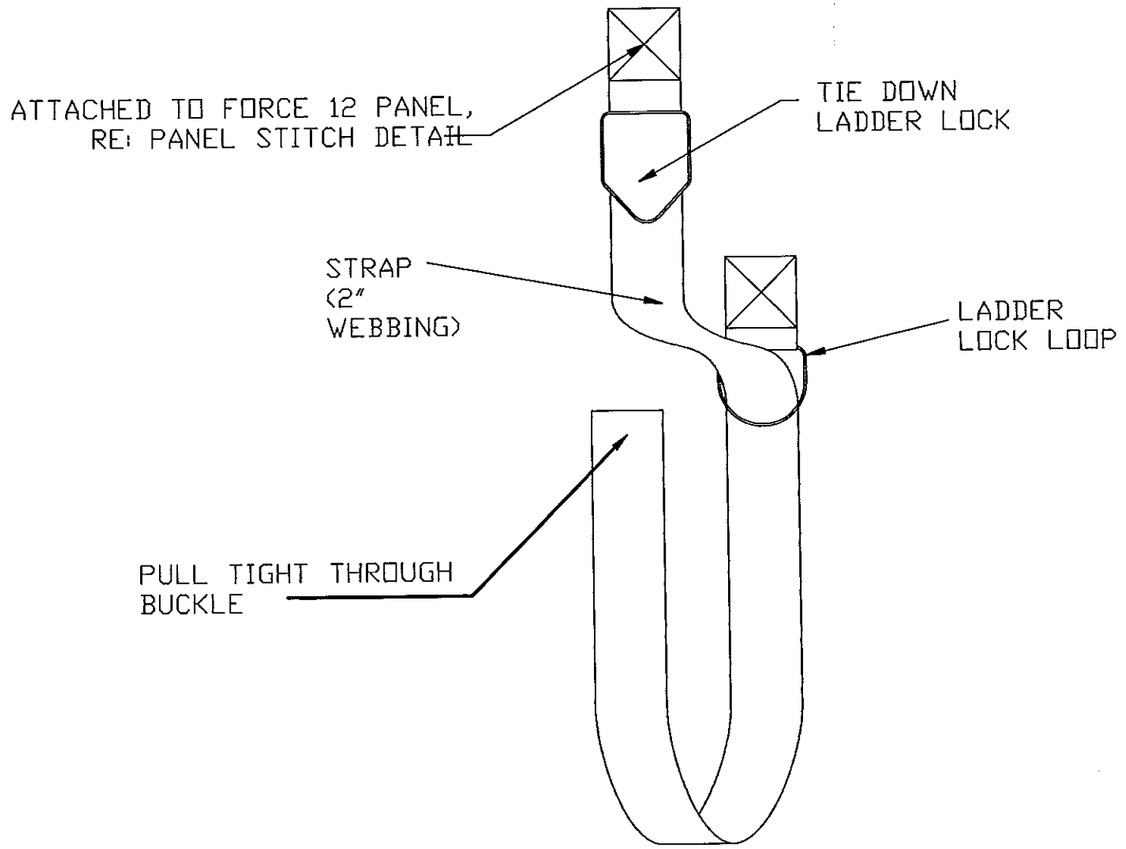

1 D1 PANEL ATTACHMENT – STRAP
SCALE: NTS =1'–0"

PRODUCT REVISED
as complying with the Florida
Building Code
Acceptance No 12-0820.04
Expiration Date 08/29/2014
By
Miami Dade Product Control

7/21/12

JAMES R. BAILEY LICENSE No 67773 STATE OF FLORIDA PROFESSIONAL ENGINEER

Hendee Enterprises, Inc.
The Innovative Solutions Company
P.O. Box 4099, Houston, TX 77210-4099 6300 Jensen Drive, Houston, TX 77026
(713) 7986-2222, Fax (713) 7986-6464 (800) 231-7251 (Intl), (800) 323-3641 (Texas)

EXPORT WARNING
USE OF THIS DOCUMENT TO
COUNTRIES OTHER THAN U.S. IS
SUBJECT TO U.S. EXPORT
ADMINISTRATION REGULATIONS.

COPYRIGHT
COPYRIGHT © 2002
HENDEE ENTERPRISES, INC.
ALL RIGHTS RESERVED

CONSULTANTS:
James R. Bailey, P.E.
FL PE #67773
Platinum Risk Consulting, LLC
4931 Chappel Hill Dr.
Missouri City, TX 77459
(281) 403-2825
FL. COA #28516

REV	DATE	DESCRIPTION
3	04/19/12	2010 BUILDING CODE COMPLIANCE REVIEW

THIS DOCUMENT, CONSISTING OF DRAWINGS AND THEIR GENERAL NOTATIONS, IS THE PROPERTY OF HENDEE ENTERPRISES, INC. AND IS NOT TO BE USED IN WHOLE OR IN PART FOR ANY PURPOSE OTHER THAN THE SPECIFIC PROJECT FOR WHICH IT WAS PREPARED AND IS NOT TO BE COPIED OR MADE AVAILABLE TO ANY UNAUTHORIZED PERSON WITHOUT THE EXPRESS WRITTEN PERMISSION OF HENDEE ENTERPRISES, INC. VISUAL CONTACT WITH THIS DOCUMENT SHALL CONSTITUTE PRIMA FACIE EVIDENCE OF ACCEPTANCE OF THESE RESTRICTIONS. ANY UNAUTHORIZED USE OF THIS DOCUMENT SHALL BE AT THE SOLE RISK OF THE USER AND WITHOUT LIABILITY TO HENDEE ENTERPRISES, INC. AND ITS OFFICERS AND EMPLOYEES.

CLIENT:	HENDEE ENTERPRISES
LOCATION:	HOUSTON, TX
TITLE:	FORCE 12 – SERIES 500 – STRAP & BUCKLE
DATE:	04/19/12
REVISION:	3

CHECKED BY:	
DRAWN BY:	AD
FILE NAME:	FORCE 12
JOB NUMBER:	N/A
DOCUMENT DATE:	03/16/09

SHEET: D8

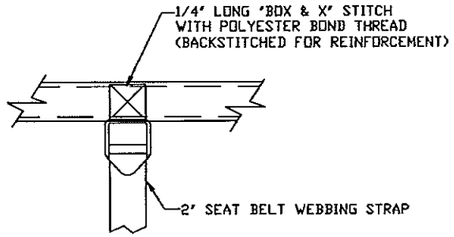

PLAN VIEW

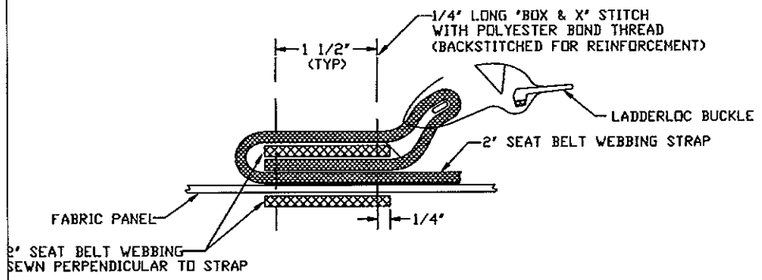

ATTACHMENT OF TIE-DOWN LADDERLOC DETAIL TO SCREEN
AT THE BOTTOM OF SCREEN

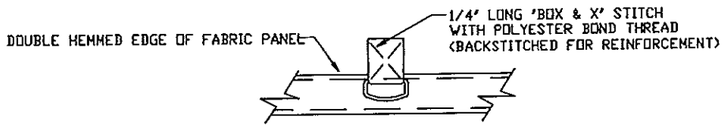

PLAN VIEW

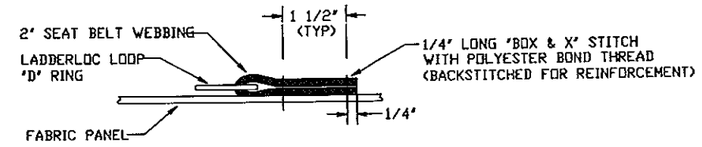

ATTACHMENT OF LADDERLOC LOOP DETAIL TO SCREEN
AT THE BOTTOM OF SCREEN

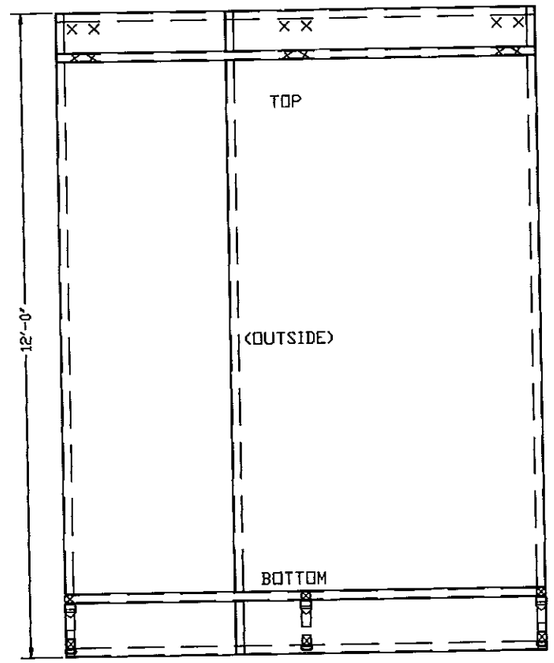

HURRICANE SCREEN ELEVATION

(OUTSIDE STITCHING DETAILS. THE SCREEN IS MANUFACTURED IN (3) STYLES; VERTICAL SEAM, HORIZONTAL SEAM, & NON-SEAMED OVERLAPPED FABRIC PANELS)

FORCE 12 - MATERIAL SPECIFICATIONS OF SCREEN	
FIBER CONTENT	100% POLYPROPYLENE
COLOR	BLACK OR ROYAL BLUE
FINISH	TENTERED & CALENDERED
CONSTRUCTION (APPROXIMATE)	WARP: 60 FILL: 50
WEAVE	3/4" BASKET WEAVE
THICKNESS	20 MILS
WEIGHT (ASTM D-3776-85)	7.6 OZ/YD^2
ABRASION RESISTANCE (ASTM D-3884)	WARP: 190 LBS FILL: 250 LBS
TENSILE STRENGTH (ASTM D-1682, GRAB METHOD)	WARP: 445 LBS FILL: 375 LBS
TEAR STRENGTH (ASTM D-2261, TRAP METHOD)	WARP: 185 LBS FILL: 190 LBS
BURST STRENGTH (ASTM D-3786 MULLEN)	720 LBS/IN^2
PUNCTURE STRENGTH (ASTM D-3787, MODIFIED)	165 LBS
U.V. RESISTANCE (ASTM G-53, % RETAINED AT 5,000 HOURS)	90%
AIR FLOW	230 CFM

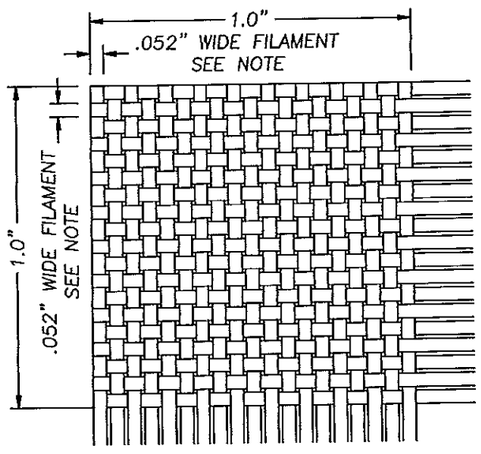

1 SQ. INCH OF SCREEN WEAVE PATTERN

NOTE:
THERE ARE (19) .052" WIDE FILAMENTS, BOTH HORIZONTALLY & VERTICALLY IN A SQUARE INCH OF FABRIC. EACH FILAMENT IS MADE UP OF (3) .013" WIDE SUB FILAMENTS.

PRODUCT REVISED
as complying with the Florida
Building Code
Acceptance No 12-0820.04
Expiration Date 08/29/2014
By
Miami Dade Product Control

7/27/12

JAMES R. BAILEY
LICENSE
No 67773
STATE OF
FLORIDA
PROFESSIONAL ENGINEER

Hendee Enterprises, Inc.
Solutions Group Company
The Innovative Solutions Company
P.O. Box 4259, Houston, TX 77210-4259 (800) 231-7225 (Nat'l), (800) 323-3941
(713) 780-2382 Fax (713) 780-4464 (Texas)

EXPORT WARNING
EXPORT OF THIS DOCUMENT TO COUNTRIES OTHER THAN THE U.S. IS SUBJECT TO U.S. EXPORT ADMINISTRATION REGULATIONS.

COPYRIGHT
COPYRIGHT © 2002
HENDEE ENTERPRISES INC.
ALL RIGHTS RESERVED

CONSULTANTS:
James R. Bailey, P.E.
FL PE #67773
Platinum Risk Consulting, LLC
4931 Chappel Hill Dr.
Missouri City, TX 77459
(281) 403-2825
FL. COA #28516

BY:	REV	DATE	DESCRIPTION
KAL	3	04/19/12	2010 BUILDING CODE COMPLIANCE REVIEW

THE SOLUTIONS CONTAINED HEREIN, AND THEIR RESPECTIVE DESIGNS AND ARRANGEMENTS, IS A TRADE SECRET AND PROPRIETARY PROPERTY OF HENDEE ENTERPRISES, INC. AND, EXCEPT AS EXPRESSLY AUTHORIZED IN WRITING BY HENDEE ENTERPRISES, INC., ARE NOT TO BE USED, COPIED, REPRODUCED, MODIFIED, DISTRIBUTED, OR DISCLOSED IN WHOLE OR IN PART. RECEIPT OR POSSESSION OF THIS DOCUMENT DOES NOT CONVEY ANY RIGHTS TO DISCLOSE OR USE THIS DOCUMENT OR THE SUBJECT MATTER HEREIN FOR ANY PURPOSE WHATSOEVER, NOR TO MANUFACTURE, OR HAVE MANUFACTURED, ANY PRODUCT SHOWN HEREIN. THE RECEIPT OF THIS DOCUMENT CONSTITUTES AN AGREEMENT AND BINDING OBLIGATION ON THE PART OF THE RECIPIENT TO OBSERVE THE FOREGOING RESTRICTIONS. IF THIS DOCUMENT IS LOANED, IT MUST BE RETURNED UPON REQUEST. IN THE EVENT OF UNAUTHORIZED USE OF THE INFORMATION IN THIS DOCUMENT, HENDEE ENTERPRISES, INC. WILL PURSUE ALL LEGAL REMEDIES AVAILABLE UNDER THE LAWS OF THE STATE OF TEXAS AND THE UNITED STATES OF AMERICA.

CHECKED BY:	
DRAWN BY:	AD
FILE NAME:	FORCE 12
JOB NUMBER:	N/A
DOCUMENT DATE:	03/16/09

SHEET:
D9

CLIENT: HENDEE ENTERPRISES
LOCATION: HOUSTON, TX
TITLE: FORCE 12 - SERIES 500 - STRAP & BUCKLE
DATE: 04/19/12
REVISION: 3

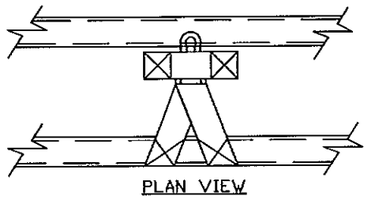

PLAN VIEW

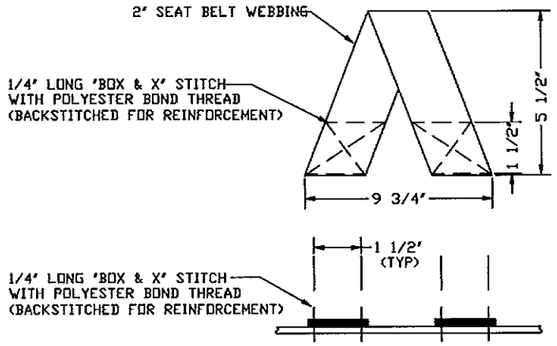

HANGER LOOP DETAIL

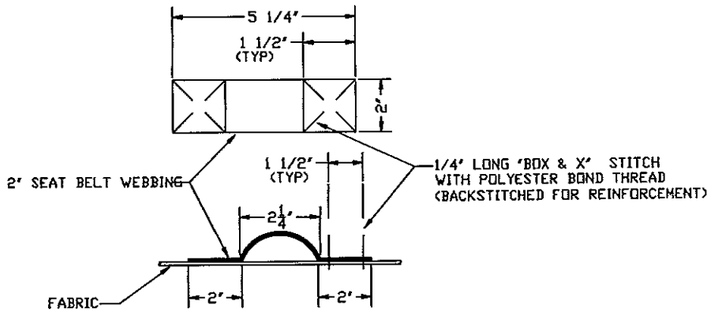

REINFORCING LOOP DETAIL

SCREEN ATTACHMENT LOOP DETAIL AT THE TOP OF SCREEN

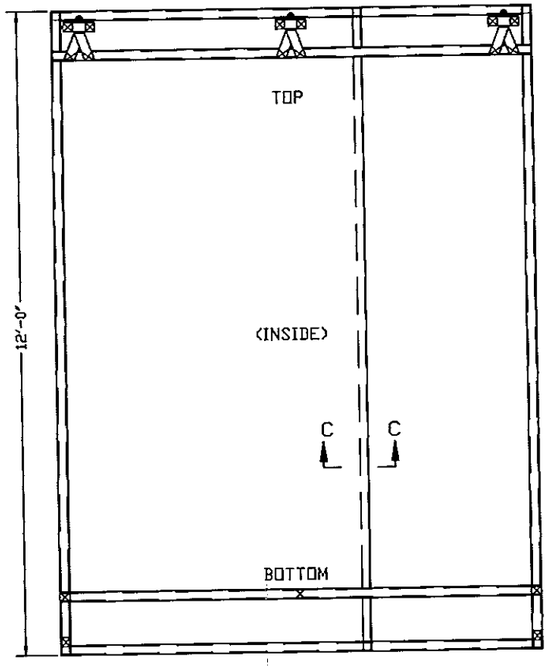

HURRICANE SCREEN ELEVATION

(INSIDE STITCHING DETAILS. THE SCREEN IS MANUFACTURED IN (3) STYLES; VERTICAL SEAM, HORIZONTAL SEAM, & NON-SEAMED OVERLAPPED FABRIC PANELS)

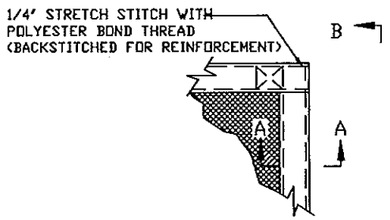

PLAN VIEW

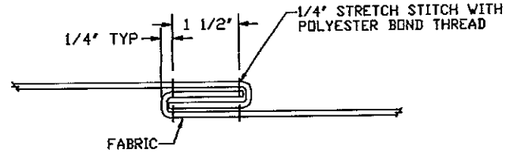

SECTION C

(HOOK SEAM DETAIL - VERTICAL OR HORIZONTAL)

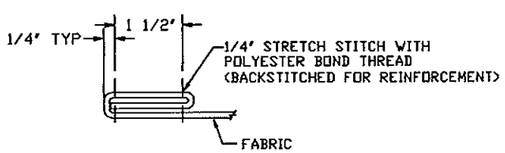

SECTION A

(DOUBLE HEM)

TYPICAL ON ALL PANEL EDGES

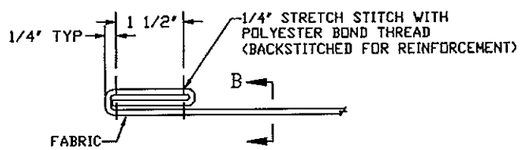

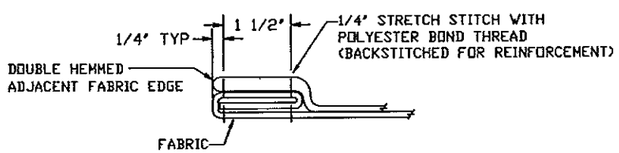

SECTION B

(CORNER HEM DETAIL)

PRODUCT REVISED
as complying with the Florida Building Code
Acceptance No 12-0820.04
Expiration Date 08/29/2014
By
Miami Dade Product Control

7/27/12

JAMES R. BAILEY LICENSE No 67773 STATE OF FLORIDA PROFESSIONAL ENGINEER

Hendee Enterprises, Inc.
The Innovative Solutions Company
P.O. Box 4299, Houston, TX 77210-4299 (800) 344-2925 (800) 231-2725 (Intl), (800) 323-3641 (Texas)
(713) 780-2332, Fax (713) 780-4464

EXPORT WARNING
EXPORT OF THIS DOCUMENT TO COUNTRIES OTHER THAN U.S. IS SUBJECT TO U.S. EXPORT ADMINISTRATION REGULATIONS.

COPYRIGHT
COPYRIGHT © 2002
HENDEE ENTERPRISES, INC.
ALL RIGHTS RESERVED

CONSULTANTS:
James R. Bailey, P.E.
FL PE #67773
Platinum Risk Consulting, LLC
4931 Chappel Hill Dr.
Missouri City, TX 77459
(281) 403-2825
FL. COA #28516

CLIENT:	HENDEE ENTERPRISES
LOCATION:	HOUSTON, TX
TITLE:	FORCE 12 - SERIES 500 - STRAP & BUCKLE
DATE:	04/19/12
REVISION:	3

SYM	REV'S	DATE	DESCRIPTION
XXX	3	04/19/12	2010 BUILDING CODE COMPLIANCE REVIEW

CHECKED BY:	
DRAWN BY:	AD
FILE NAME:	FORCE 12
JOB NUMBER:	N/A
DOCUMENT DATE:	03/16/09

SHEET: D10

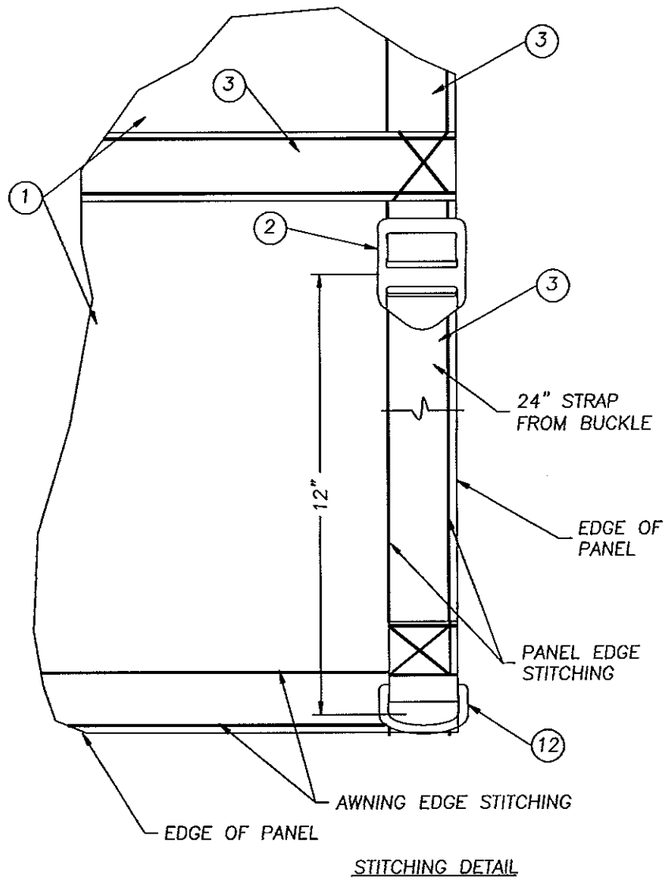

STITCHING DETAIL

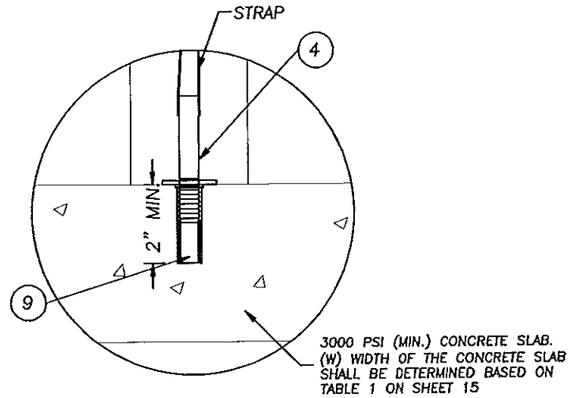

DETAIL "A"
SCREEN TO CONCRETE @ BOTTOM
DROP-IN ANCHOR IS INSTALLED VERTICALLY
(USE MIN. EDGE DISTANCE)

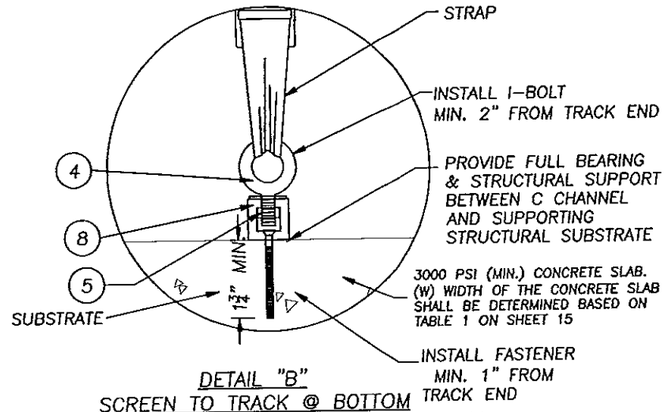

DETAIL "B"
SCREEN TO TRACK @ BOTTOM
TAPCON FASTENER IS INSTALLED VERTICALLY
(USE MIN. EDGE DISTANCE)

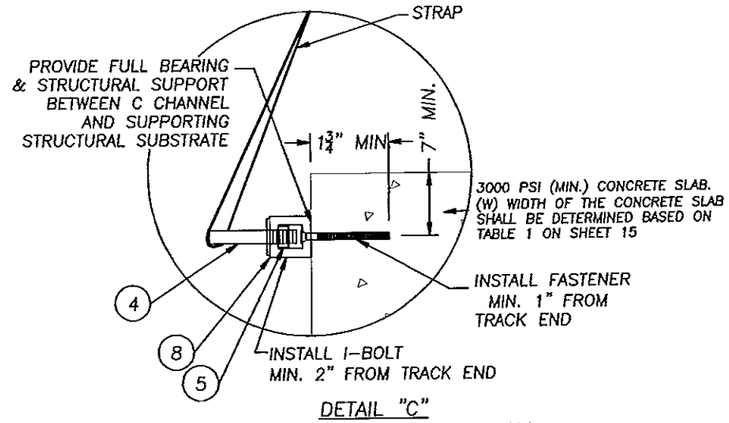

DETAIL "C"
SCREEN TO TRACK @ BOTTOM
TAPCON FASTENER IS INSTALLED HORIZONTALLY
(USE MIN. EDGE DISTANCE)

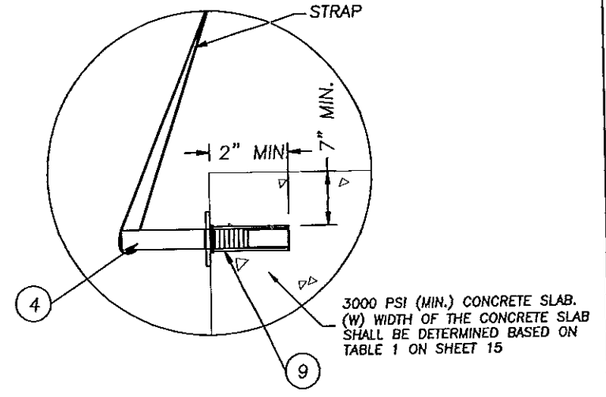

DETAIL "D"
SCREEN TO CONCRETE @ BOTTOM
DROP-IN ANCHOR IS INSTALLED HORIZONTALLY
(USE MIN. EDGE DISTANCE)

Rt: Reaction tensile force
Rs: Reaction shear force
Ft: Fastener allowable tensile load
Fs: Fastener allowable shear load

Reaction (Rt or Rs) is maximum absolute value for a + 60 PSF load w/ 22.5" strap spacing or a + 55 PSF load w/ 24.0" strap spacing, with reaction acting either @ 22.5" O.C. or @ 24.0" O.C.

Fastener (Ft or Fs) is minimum allowable value for a + 60 PSF load w/ 22.5" strap spacing or a + 55 PSF load w/ 24.0" strap spacing; values for Drop-in Anchors based on one fastener either @ 22.5" O.C. or @ 24.0" O.C.; values for Tapcons based on 4 fasteners @ 6" O.C.; values for #14 Wood Screw based on 4 fasteners @ 6" O.C. (no offset) or 5 fasteners @ 5" O.C. (offset)

DETAIL	Rt (lbs)	Rs (lbs)	Ft (lbs)	Fs (lbs)
A	941	675	1232	1410
B	941	675	1856	1500
C	1042	1183	1856	1500
D	1042	1183	1232	1410

PRODUCT REVISED
as complying with the Florida
Building Code
Acceptance No 12-0820.04
Expiration Date 08/29/2014
By
Miami Dade Product Control

7/27/12

JAMES R. BAILEY
LICENSE
No 67773
STATE OF
FLORIDA
PROFESSIONAL ENGINEER

Hendee Enterprises, Inc.
The Innovative Solutions Company
P.O. Box 4259, Houston, TX 77210-4259 (713) 766-2332
6550 Sixth Str., Houston, TX 77054 (713) 747-2727 (Intl.) (800) 323-5441 (Texas)

COPYRIGHT
COPYRIGHT © 2002
HENDEE ENTERPRISES, INC.
ALL RIGHTS RESERVED

EXPORT WARNING
EXPORT OF THIS DOCUMENT TO
COUNTRIES OUTSIDE OF THE U.S. IS
SUBJECT TO U.S. EXPORT
ADMINISTRATION REGULATIONS.

CONSULTANTS:
James R. Bailey, P.E.
FL PE #67773
Platinum Risk Consulting, LLC
4931 Chapel Hill Dr.
Missouri City, TX 77459
(281) 403-2825
FL. COA #28516

CLIENT: HENDEE ENTERPRISES
LOCATION: HOUSTON, TX
TITLE: FORCE 12 - SERIES 500 - STRAP & BUCKLE
DATE: 04/19/12
REVISION: 3

BY:	REV:	DATE	DESCRIPTION
KML	3	04/19/12	2010 BUILDING CODE COMPLIANCE REVIEW

THIS DOCUMENT, CONTAINING CONFIDENTIAL AND TRADE SECRET INFORMATION, IS THE PROPERTY OF HENDEE ENTERPRISES, INC. AND IS LOANED SUBJECT TO RETURN UPON REQUEST. THIS DOCUMENT IS NOT TO BE REPRODUCED, SHOWN TO OTHERS, OR USED FOR MANUFACTURE EXCEPT AS EXPRESSLY AUTHORIZED IN WRITING BY HENDEE ENTERPRISES, INC. THE RECEIPT OR POSSESSION OF THIS DOCUMENT DOES NOT CONVEY ANY RIGHTS TO REPRODUCE, DISCLOSE OR LICENSE THE INFORMATION CONTAINED HEREIN, OR TO MANUFACTURE, OR TO HAVE MANUFACTURED, OR TO SELL OR OFFER TO SELL ANY APPARATUS OR DEVICE WHICH MAY BE DESCRIBED HEREIN. THE RECEIPT OR POSSESSION OF THIS DOCUMENT DOES NOT CONVEY ANY RIGHTS TO PUBLISH, OR TO USE THE SUBJECT MATTER IN ANY WAY WITHOUT THE EXPRESS WRITTEN PERMISSION OF HENDEE ENTERPRISES, INC. IN THE EVENT OF PUBLICATION, THE FOLLOWING NOTICE SHALL APPEAR: "REPRODUCED FROM COPYRIGHTED DRAWINGS OF HENDEE ENTERPRISES, INC. WITH PERMISSION."

CHECKED BY:
DRAWN BY: AD
FILE NAME: FORCE 12
JOB NUMBER: N/A
DOCUMENT DATE: 03/16/09

SHEET: D11

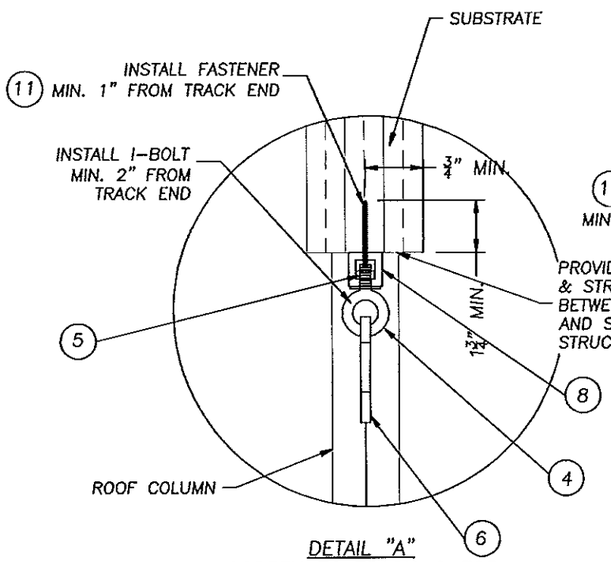

DETAIL "A"
SCREEN TO TRACK @ TOP
FASTENER IS INSTALLED VERTICALLY
(USE MIN. EDGE DISTANCE)

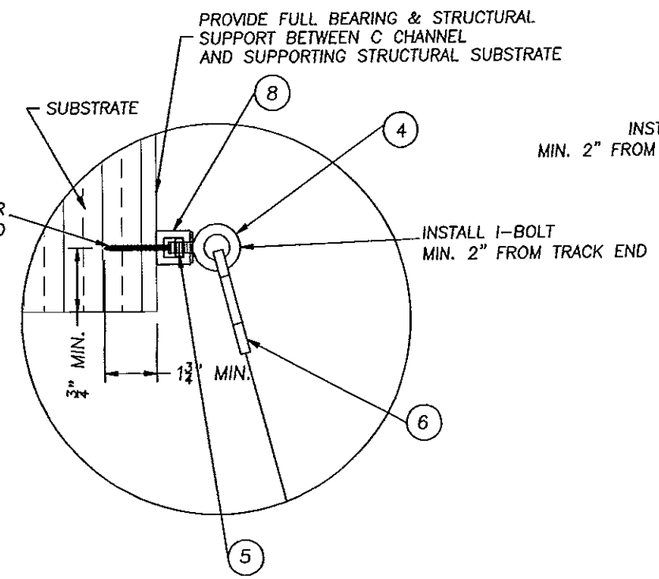

DETAIL "B"
SCREEN TO TRACK @ TOP
FASTENER IS INSTALLED HORIZONTALLY ON INSIDE OF OPENING
(USE MIN. EDGE DISTANCE)

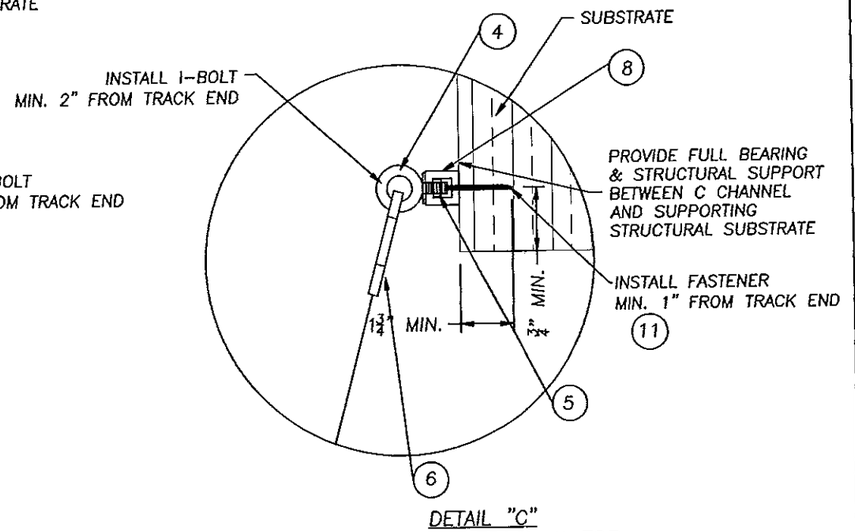

DETAIL "C"
SCREEN TO TRACK @ TOP
FASTENER IS INSTALLED HORIZONTALLY ON OUTSIDE OF OPENING
(USE MIN. EDGE DISTANCE)

FOR 1/4" TAPCON (10) USE 1 3/4" MIN. EMBEDMENT.

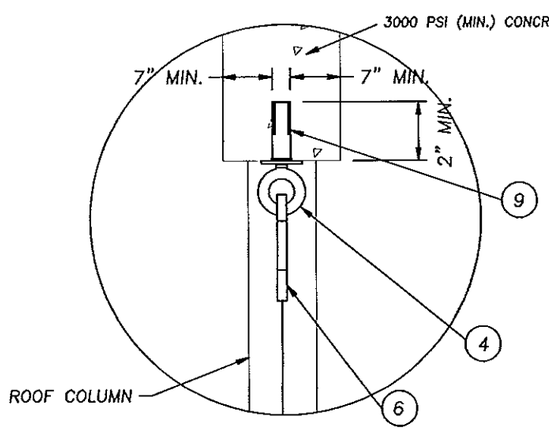

DETAIL "D"
SCREEN TO CONCRETE @ TOP
DROP-IN FASTENER IS INSTALLED VERTICALLY
(USE MIN. EDGE DISTANCE)

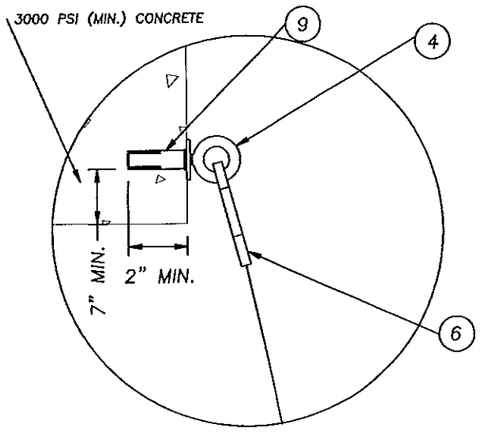

DETAIL "E"
SCREEN TO CONCRETE @ TOP
DROP-IN FASTENER IS INSTALLED HORIZONTALLY ON INSIDE OF OPENING
(USE MIN. EDGE DISTANCE)

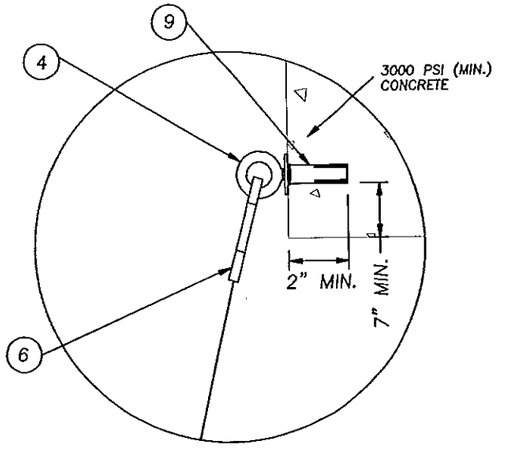

DETAIL "F"
SCREEN TO CONCRETE @ TOP
DROP-IN FASTENER IS INSTALLED HORIZONTALLY ON OUTSIDE OF OPENING
(USE MIN. EDGE DISTANCE)

Rt: Reaction tensile force
Rs: Reaction shear force
Ft: Fastener allowable tensile load
Fs: Fastener allowable shear load

Reaction (Rt or Rs) is maximum absolute value for a + 60 PSF load w/ 22.5" strap spacing or a + 55 PSF load w/ 24.0" strap spacing, with reaction acting either @ 22.5" O.C. or @ 24.0" O.C.

Fastener (Ft or Fs) is minimum allowable value for a + 60 PSF load w/ 22.5" strap spacing or a + 55 PSF load w/ 24.0" strap spacing; values for Drop-in Anchors based on one fastener either @ 22.5" O.C. or @ 24.0" O.C.; values for Tapcons based on 4 fasteners @ 6" O.C.; values for #14 Wood Screw based on 4 fasteners @ 6" O.C. (no offset) or 5 fasteners @ 5" O.C. (offset)

DETAIL	Rt (lbs)	Rs (lbs)	Ft (lbs)	Fs (lbs)
A	941	675	1768	1080
B	1042	1183	2210	1350
C	1042	1183	2210	1350
D	941	675	1232	1410
E	1042	1183	1232	1410
F	1042	1183	1232	1410

PRODUCT REVISED
as complying with the Florida
Building Code
Acceptance No 12-0829.04
Expiration Date 08/29/2014
By
Miami Dade Product Control
7/27/12

JAMES R. BAILEY
LICENSE
No 67773
STATE OF
FLORIDA
PROFESSIONAL ENGINEER

Hendee Enterprises, Inc.
The Innovative Solutions Company
P.O. Box 4288, Houston, TX 77210-4288 (800) 231-2729 (Intl'l), (800) 323-3641 (Texas)
(713) 780-2332 Fax (713) 780-4848

EXPORT WARNING
EXPORT OF THIS DOCUMENT TO COUNTRIES OTHER THAN THE U.S. IS SUBJECT TO U.S. EXPORT ADMINISTRATION REGULATIONS.

COPYRIGHT
COPYRIGHT © 2002
HENDEE ENTERPRISES INC.
ALL RIGHTS RESERVED

CONSULTANTS:
James R. Bailey, P.E.
FL PE #67773
Platinum Risk Consulting, LLC
4931 Chapel Hill Dr.
Missouri City, TX 77459
(281) 403-2825
FL. COA #28516

CLIENT: HENDEE ENTERPRISES
LOCATION: HOUSTON, TX
TITLE: FORCE 12 - SERIES 500 - STRAP & BUCKLE
DATE: 04/19/12
REVISION: 3

SYM	DATE	DESCRIPTION
3	04/19/12	2010 BUILDING CODE COMPLIANCE REVIEW

CHECKED BY:
DRAWN BY: AD
FILE NAME: FORCE 12
JOB NUMBER: N/A
DOCUMENT DATE: 03/16/09
SHEET: D12

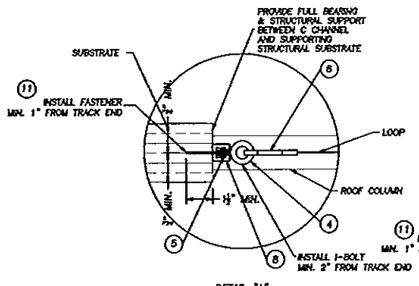

DETAIL "A"
SCREEN TO TRACK @ SIDE [LOOP END]
FASTENER IS INSTALLED HORIZONTALLY
(USE MIN. EDGE DISTANCE)

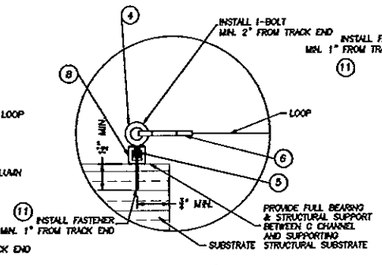

DETAIL "B"
SCREEN TO TRACK @ TOP [LOOP END]
FASTENER IS INSTALLED HORIZONTALLY ON INSIDE OF OPENING
(USE MIN. EDGE DISTANCE)

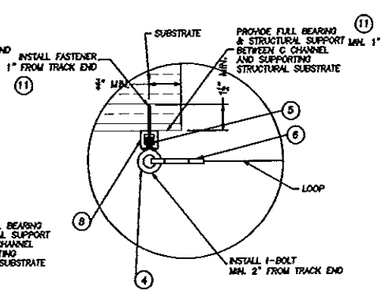

DETAIL "C"
SCREEN TO TRACK @ TOP [LOOP END]
FASTENER IS INSTALLED HORIZONTALLY ON OUTSIDE OF OPENING
(USE MIN. EDGE DISTANCE)

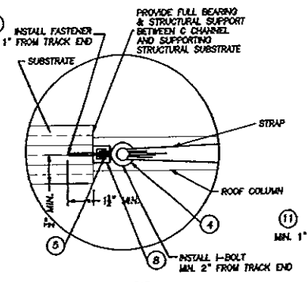

DETAIL "D"
SCREEN TO TRACK @ SIDE [STRAP END]
FASTENER IS INSTALLED HORIZONTALLY
(USE MIN. EDGE DISTANCE)

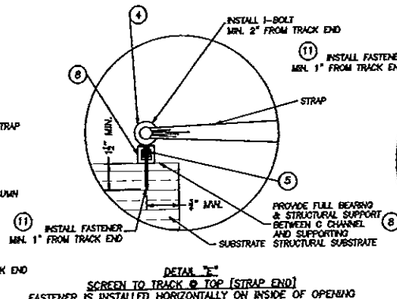

DETAIL "E"
SCREEN TO TRACK @ TOP [STRAP END]
FASTENER IS INSTALLED HORIZONTALLY ON INSIDE OF OPENING
(USE MIN. EDGE DISTANCE)

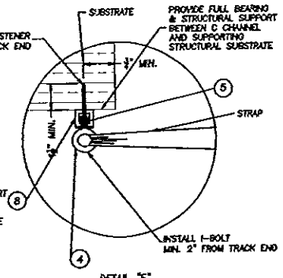

DETAIL "F"
SCREEN TO TRACK @ TOP [STRAP END]
FASTENER IS INSTALLED HORIZONTALLY ON OUTSIDE OF OPENING
(USE MIN. EDGE DISTANCE)

FOR ¼" TAPCON ⑩ USE 1 ¾" MIN. EMBEDMENT.

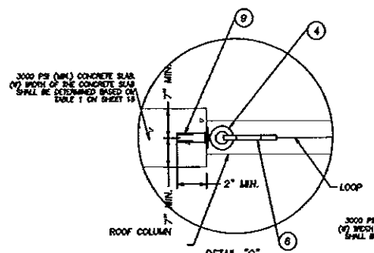

DETAIL "G"
SCREEN TO CONCRETE @ TOP [LOOP END]
DROP-IN FASTENER IS INSTALLED HORIZONTALLY
(USE MIN. EDGE DISTANCE)

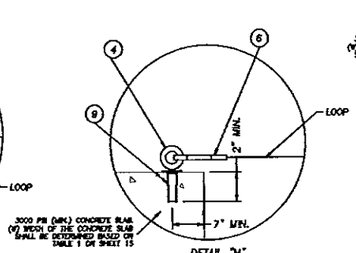

DETAIL "H"
SCREEN TO CONCRETE @ TOP [LOOP END]
DROP-IN FASTENER IS INSTALLED HORIZONTALLY ON INSIDE OF OPENING
(USE MIN. EDGE DISTANCE)

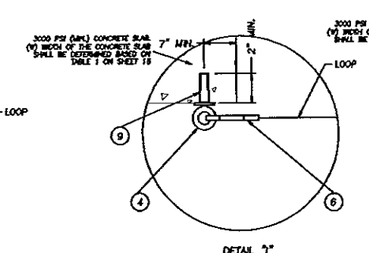

DETAIL "I"
SCREEN TO CONCRETE @ TOP [LOOP END]
DROP-IN FASTENER IS INSTALLED HORIZONTALLY ON OUTSIDE OF OPENING
(USE 2" MIN. EDGE DISTANCE)

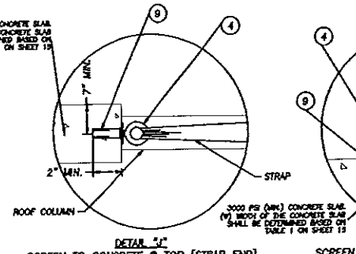

DETAIL "J"
SCREEN TO CONCRETE @ TOP [STRAP END]
DROP-IN FASTENER IS INSTALLED HORIZONTALLY
(USE 2" MIN. EDGE DISTANCE)

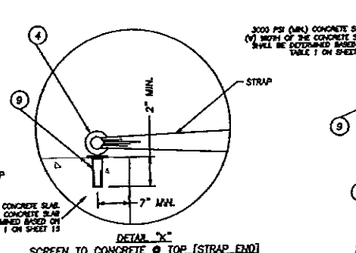

DETAIL "K"
SCREEN TO CONCRETE @ TOP [STRAP END]
DROP-IN FASTENER IS INSTALLED HORIZONTALLY ON INSIDE OF OPENING
(USE 2" MIN. EDGE DISTANCE)

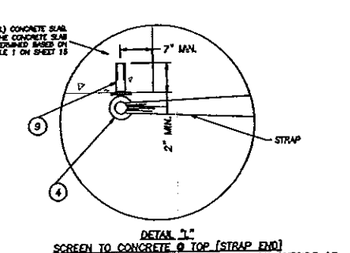

DETAIL "L"
SCREEN TO CONCRETE @ TOP [STRAP END]
DROP-IN FASTENER IS INSTALLED HORIZONTALLY ON OUTSIDE OF OPENING
(USE 2" MIN. EDGE DISTANCE)

Rt: Reaction tensile force
Rs: Reaction shear force
Ft: Fastener allowable tensile load
Fs: Fastener allowable shear load

Reaction (Rt or Rs) is maximum absolute value for a + 60 PSF load w/ 22.5" strap spacing or a + 55 PSF load w/ 24.0" strap spacing, with reaction acting either ⓪ 22.5" O.C. or ⓪ 24.0" O.C.

Fastener (Ft or Fs) is minimum allowable value for a + 60 PSF load w/ 22.5" strap spacing or a + 55 PSF load w/ 24.0" strap spacing; values for Drop-in Anchors based on one fastener either ⓪ 22.5" O.C. or ⓪ 24.0" O.C.; values for Tapcons based on 4 fasteners ⓪ 6" O.C.; values for #14 Wood Screw based on 4 fasteners ⓪ 6" O.C. (no offset) or 5 fasteners ⓪ 5" O.C. (offset)

DETAIL	Rt (lbs)	Rs (lbs)	Ft (lbs)	Fs (lbs)
A	941	675	1768	1080
B	675	941	1768	1080
C	675	941	1768	1080
D	941	675	1768	1080
E	675	941	1768	1080
F	675	941	1768	1080
G	941	675	1232	1410
H	675	941	1232	1410
I	675	941	1232	1410
J	941	675	1232	1410
K	675	941	1232	1410
L	675	941	1232	1410

PRODUCT REVISED
as complying with the Florida
Building Code
Acceptance No 12-0820.04
Expiration Date 08/29/2014
By
Miami Dade Product Control

7/27/12

JAMES R. BAILEY
LICENSE
No 67773
STATE OF
FLORIDA
PROFESSIONAL ENGINEER

Hendee Enterprises, Inc.
The Innovative Solutions Company
P.O. Box 4299, Houston, TX 77210-4299 (8350 South Post Oak Rd.) 77054
(713) 796-2332, Fax (713) 796-0464, (800) 231-7271 (Nat'l), (800) 323-3544 (Texas)

EXPORT WARNING
USE OF THIS DOCUMENT TO COUNTRIES OTHER THAN U.S. IS SUBJECT TO U.S. EXPORT ADMINISTRATION REGULATIONS.

COPYRIGHT
COPYRIGHT © 2002
HENDEE ENTERPRISES, INC.
ALL RIGHTS RESERVED

CONSULTANTS:
James R. Bailey, P.E.
FL PE #67773
Platinum Risk Consulting, LLC
4931 Chappel Hill Dr.
Missouri City, TX 77459
(281) 403-2825
FL. COA #28516

BY	REV	DATE	DESCRIPTION
KML	3	04/19/12	2010 BUILDING CODE COMPLIANCE REVIEW

THIS DOCUMENT, CONTAINING CONCEPTUAL AND TRADE SECRET INFORMATION, IS THE PROPERTY OF HENDEE ENTERPRISES, INC. AND IS LOANED SUBJECT TO RETURN UPON DEMAND. THE DOCUMENT IS CONFIDENTIAL IN WHOLE AND IN PART AND IS NOT TO BE REPRODUCED, COPIED OR COMMUNICATED IN ANY FORM OR MANNER WHATSOEVER NOR IS ANY INFORMATION THEREIN TO BE DISCLOSED TO OTHERS OR USED IN ANY MANNER EXCEPT AS AUTHORIZED IN WRITING BY HENDEE ENTERPRISES, INC. THE RECEIPT OF THIS DOCUMENT CONSTITUTES AN AGREEMENT TO THE FOREGOING.

CHECKED BY:
DRAWN BY: AD
FILE NAME: FORCE 12
JOB NUMBER: N/A
DOCUMENT DATE: 03/16/09

SHEET: D13

CLIENT: HENDEE ENTERPRISES
LOCATION: HOUSTON, TX
TITLE: FORCE 12 - SERIES 500 - STRAP & BUCKLE
DATE: 04/19/12
REVISION: 3

Item	DESCRIPTION	Material
1	HURRICANE SCREEN (SEE SCREEN CONSTRUCTION SHT. 1)	POLYPROP.
2	TIE DOWN LADDERLOC (ITW NEXUS, ACETAL HOSTAFORM C)	ACETAL
3	STRAP (SEE SHEET 8)	
4	1/2" EYEBOLT (CHICAGO #5, QUALITY MARINE HARDWARE, OR EQUAL)	S STEEL
5	1/2" UNI-STRUT NUT (STAINLESS STEEL, W/OUT SPRING)	S STEEL
6	3/4" SPRING SNAP (CAMMBELL #B765068, SUNCOR, OR EQUAL)	S STEEL
7	1/2" FLAT WASHER (.108" THK. STEEL)	STEEL
8	EXTRUDED ALUM. SCREEN TRACK (.325" WALL, 6063-T6)	ALUM.
9	1/2" DROP-IN ANCHOR (BY POWERS RAWL OR EQUAL)	S STEEL
10	TAPCON 1/4" x 3 1/4" LG. (ELCO) W/ 1 3/4" (MIN. EMBEDMENT)	STEEL
11	#14 WOOD SCREW INTO WOOD WITH 1 1/2" MIN. EMBEDMENT	S STEEL
12	LADDERLOC LOOP (ITW NEXUS, ACETAL HOSTAFORM C)	ACETAL
13	LEFT BLANK	—
14	1/2" EYEBOLT (CHICAGO #7,QUALITY MARINE HARDWARE, OR EQUAL)	S STEEL
15	1/2" FLAT WASHER (.108" THK. STEEL)	STEEL

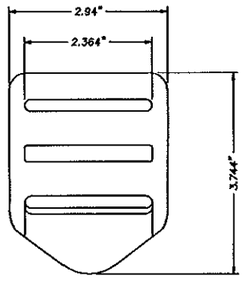

(2) .22" THK. ACETAL HOSTAFORM C
TIE DOWN LADDERLOC ACETAL HOSTAFORM C

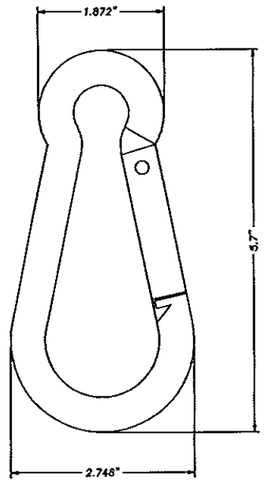

(6) 3/4" SPRING SNAP
.434" THK. STAINLESS STEEL BAR

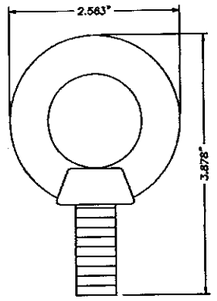

(4) ø1/2" SHOULDERED EYEBOLT
STAINLESS STEEL 1/2" THK. BAR

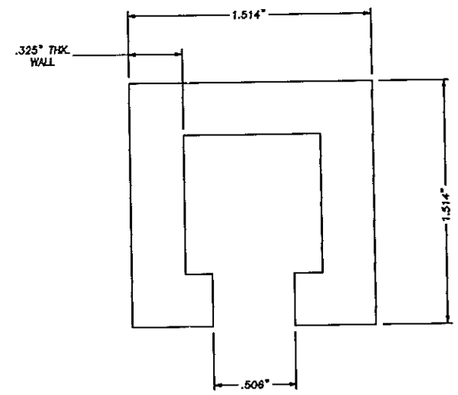

(8) EXTRUDED ALUMINUM SCREEN TRACK
.325" THK. 6063-T6 ALUMINUM

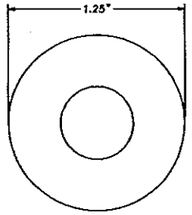

(7) 1/2" FLAT WASHER
.108" THK. STEEL

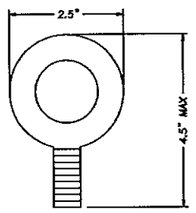

(14) 1/2" EYEBOLT
STAINLESS STEEL 1/2" THK. BAR

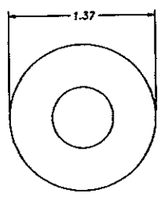

(15) 1/2" FLAT WASHER
.108" THK. STEEL

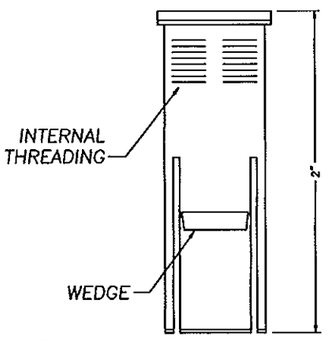

(9) ø1/2" DROP-IN ANCHOR
STAINLESS STEEL

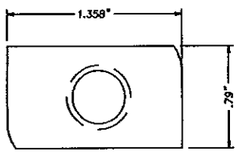

(5) 1/2" UNI-STRUT NUT W/OUT SPRING
.364" THK. STAINLESS STEEL

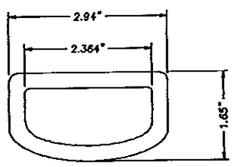

(12) LADDERLOC LOOP
.161" THK. ACETAL HOSTAFORM C

PRODUCT REVISED
as complying with the Florida
Building Code
Acceptance No 12-0820.04
Expiration Date 08/29/2014
By
Miami Dade Product Control

JAMES R. BAILEY
LICENSE
No 67773
STATE OF
FLORIDA
PROFESSIONAL ENGINEER
7/27/12

Hendee Enterprises, Inc.
The Innovative Solutions Company
P.O. Box 4259, Houston, TX 77210-4259 (713) 780-2202, Fax (713) 780-4464
8300 South Park Place, Clear Lake, TX 77058
(713) 222-7572 (Main) (800) 332-3641 (Texas)

EXPORT WARNING: THIS DOCUMENT AND THE INFORMATION CONTAINED IN IT IS SUBJECT TO U.S. EXPORT ADMINISTRATION REGULATIONS.

COPYRIGHT
COPYRIGHT © 2002
HENDEE ENTERPRISES, INC.
ALL RIGHTS RESERVED

CONSULTANTS:
James R. Bailey, P.E.
FL PE #67773
Platinum Risk Consulting, LLC
4931 Chappel Hill Dr.
Missouri City, TX 77459
(281) 403-2825
FL. COA #28516

BY:	REV	DATE:	DESCRIPTION
MM	3	04/19/12	2010 BUILDING CODE COMPLIANCE REVIEW

THIS DOCUMENT, CONTAINING CONCEPTIONAL AND TRADE SECRET INFORMATION, IS THE PROPERTY OF HENDEE ENTERPRISES, INC. AND IS LOANED SUBJECT TO AGREEMENT THAT NEITHER THE DOCUMENT NOR THE INFORMATION IT CONTAINS IS TO BE REPRODUCED, USED OR DISCLOSED EXCEPT AS THE WRITTEN AUTHORIZATION OF HENDEE ENTERPRISES, INC. SHALL HAVE BEEN OBTAINED. IF PERMISSION IS GRANTED TO QUOTE FROM OR REPRODUCE ANY PORTION OF THIS DOCUMENT, EACH COPY THEREOF OR THE COMPOSITION OR TRADE SECRET INFORMATION THEREIN, SHALL BEAR A NOTICE SIMILAR TO THIS ONE AND THE SCOPE OF PERMISSION SHALL BE CLEARLY DEFINED. THIS DOCUMENT OR COPIES THEREOF SHALL NOT BE SOLD, LOANED, DISCLOSED OR UPON CONDITION OF THE NEED TO RETAIN THE DOCUMENT OR UPON REQUEST OF HENDEE ENTERPRISES, INC. SHALL BE RETURNED TO HENDEE ENTERPRISES, INC. IN THE EVENT OF UNAUTHORIZED USE OR DISCLOSURE, ALL LEGAL REMEDIES AVAILABLE SHALL BE SOUGHT.

CLIENT: HENDEE ENTERPRISES
LOCATION: HOUSTON, TX
TITLE: FORCE 12 - SERIES 500 - STRAP & BUCKLE
DATE: 04/19/12
REVISION: 3

CHECKED BY:
DRAWN BY: AD
FILE NAME: FORCE 12
JOB NUMBER: N/A
DOCUMENT DATE: 03/16/09

SHEET: D14

CONCRETE SLAB/FOUNDATION DIMENSIONS

TABLE 1		SLAB WIDTH IN FT.								
WIND PRESSURE (psf)	SLAB THICKNESS (in)	SCREEN HEIGHT (ft)								
		12			10			8		
		CASE 1	CASE 2	CASE 3	CASE 1	CASE 2	CASE 3	CASE 1	CASE 2	CASE 3
60 ANCHORS 22 1/2" O.C.	4	36.6	43.6	28.8	31.2	37.6	24.2	25.8	31.5	19.6
	5	29.2	34.9	23.0	25.0	30.1	19.3	20.6	25.2	15.7
	6	24.4	29.1	19.2	20.8	25.1	16.1	17.2	21.0	13.0
	7	20.9	24.9	16.4	19.7	21.5	13.8	14.7	18.0	11.2
	8	18.3	21.8	14.4	15.6	16.1	12.1	12.9	15.8	9.8
55 ANCHORS 24" O.C.	4	33.9	40.7	26.5	29.0	35.1	22.3	24.0	29.4	18.0
	5	27.1	32.5	21.2	23.2	28.0	17.8	19.2	23.5	14.4
	6	22.6	27.1	17.6	19.3	23.4	14.8	16.0	19.6	12.0
	7	19.4	23.2	15.1	16.6	20.0	12.7	13.7	16.8	10.3
	8	17.0	20.3	13.2	14.5	17.5	11.1	12.0	14.7	9.0
50 ANCHORS 24" O.C.	4	31.2	37.7	24.1	26.7	32.5	20.3	22.1	27.3	16.4
	5	25.0	30.2	19.3	21.4	26.0	16.2	17.7	21.8	13.1
	6	20.8	25.1	16.1	17.8	21.7	13.6	14.7	18.2	11.0
	7	17.9	21.5	13.8	15.3	18.6	11.6	12.6	15.6	9.4
	8	15.6	18.8	12.1	13.4	16.2	10.2	11.1	13.6	8.2
40 ANCHORS 24" O.C.	4	35.8	31.6	19.5	27.1	27.3	16.4	18.3	22.9	13.3
	5	20.6	25.3	15.6	17.6	21.8	13.1	14.6	18.3	10.6
	6	17.2	21.1	13.0	14.7	18.2	10.9	12.2	15.3	8.8
	7	14.7	18.1	11.1	12.6	15.6	9.4	10.5	13.1	7.6
	8	12.9	15.8	9.7	11.1	13.7	8.2	9.2	11.5	6.6

TABLE 1 NOTES:

1. *WIDTH IS MEASURED PERPENDICULAR TO SCREEN.*
2. *THE BUILDING FOUNDATION IS ASSUMED TO PROVIDE SUFFICIENT LATERAL SUPPORT TO PREVENT SLIDING TOWARDS THE BUILDING. IF THE SLAB DOES NOT PROVIDE LATERAL STABILITY, ASSUME CASE 2 FOR ALL INSTALLATIONS.*
3. *CASE 1 – VERTICAL INSTALLATION*
   CASE 2 – VERTICAL INSTALLATION PITCHED OUTWARD.
   CASE 3 – VERTICAL INSTALLATION INWARD (SEE DETAIL 1/4).
4. *IF SUFFICIENT LATERAL SUPPORT IS PRESENT TO RESTRAIN MOVEMENT OF THE SLAB AWAY FROM THE EXTERIOR WALL (SEE SHEET 2 AND 4), THEN THE REQUIRED SLAB WIDTH IN TABLE 1 MAY BE MULTIPLIED BY A FACTOR OF 0.55 REDUCTION*

FASTENER NOTES:

FASTENERS AT SILL:

1. *FASTENERS ARE LOCATED PER STRAP LOCATIONS, 24" O.C. FOR WIND PRESSURES <55 PSF, AND 22 1/2" O.C. FOR PRESSURES FROM 55 TO 60 PSF.*
2. *FASTENER TYPES:*
   CONCRETE – POWERS 1/2" DIA. DROP–IN ANCHOR. (2" MIN. EMBEDMENT) OR EQUAL.

FASTENERS AT HEAD/JAMB

1. *STRAPS ARE ATTACHED TO EYE BOLTS, WHICH ARE INSTALLED IN THE C–TRACK 24" O.C. FOR WIND PRESSURES <55 PSF, AND 22 1/2" FOR PRESSURES 55 TO 60 PSF.*
2. *C–CHANNEL IS ANCHORED TO STRUCTURE AT HEAD FOR VERTICAL INSTALLATIONS AND AT BOTH JAMBS FOR HORIZONTAL INSTALLATIONS.*
3. *FASTENER TYPES:*
   A. *1/4" DIA. ELCO TAPCON INTO 3000 PSI CONCRETE WITH 1 3/4" MIN. EMBEDMENT AND 2" MIN. EDGE DISTANCE.*
   B. *1/4" DIA. ELCO TAPCON INTO 3200 PSI CONCRETE WITH 1 3/4" MIN. EMBEDMENT AND 2" MIN. EDGE DISTANCE.*
   C. *1/4" DIA ELCO TAPCON INTO HOLLOW CMU BLOCK WITH 1 1/4" MIN. EMBEDMENT AND 2" MIN. EDGE DISTANCE.*
   D. *#14 WOOD SCREW INTO WOOD WITH 1 1/2" MIN. EMBEDMENT AND 3/4" MIN. EDGE DISTANCE*
4. *FASTENERS ARE INSTALLED 1" FROM END OF TRACK AND SPACED PER TABLE 2 BELOW.*

TABLE 2		FASTENER SPACING (in)			
SCREEN HEIGHT (ft)	FASTENER TYPE	WIND PRESSURE (psf)			
		60	55	50	40
12	A	6	6	7	9
	B	6	6	7	9
	C	4	4	4	6
	D	6	6	7	9
10	A	7	7	8	10
	B	7	7	8	10
	C	4	4	5	7
	D	7	7	8	10
8	A	9	9	10	12
	B	9	9	10	12
	C	6	6	7	10
	D	9	9	10	12

SCREEN OFFSET AT BASE

TABLE 3	
HEIGHT	OFFSET DISTANCE (in)
6'–0"	1'–10"
8'–0"	2'–8"
10'–0"	3'–10"
12'–0"	4'–10"

PRODUCT REVISED
as complying with the Florida Building Code
Acceptance No 12-0820.04
Expiration Date 08/29/2014
By
Miami Dade Product Control

7/22/12

JAMES R. BAILEY LICENSE No 67773 STATE OF FLORIDA PROFESSIONAL ENGINEER

Hendee Enterprises, Inc.
The Innovative Solutions Company
P.O. Box 4289, Houston, TX 77210-4289 8300 South Park Dr., Houston, TX 77054
(713) 796-2332, Fax (713) 796-8486 (800) 231-7272 (toll) (800) 328-3041 (fax)

EXPORT WARNING
EXPORT OF THIS DOCUMENT TO COUNTRIES OUTSIDE THE U.S. IS SUBJECT TO U.S. EXPORT ADMINISTRATION REGULATIONS.

COPYRIGHT
COPYRIGHT © 2002
HENDEE ENTERPRISES INC.
ALL RIGHTS RESERVED

CONSULTANTS:
James R. Bailey, P.E.
FL PE #67773
Platinum Risk Consulting, LLC
4931 Chappell Hill Trl
Missouri City, TX 77459
(281) 403-2825
FL. COA #28516

CLIENT: HENDEE ENTERPRISES
LOCATION: HOUSTON, TX
TITLE: FORCE 12 – SERIES 500 – STRAP & BUCKLE
DATE: 04/19/12
REVISION: 3

BY:	REV	DATE	DESCRIPTION
MJL	3	04/19/12	2010 BUILDING CODE COMPLIANCE REVIEW

CHECKED BY:
DRAWN BY: AD
FILE NAME: FORCE 12
JOB NUMBER: N/A
DOCUMENT DATE: 03/16/09

SHEET: D15