MIAMI-DADE COUNTY
PRODUCT CONTROL SECTION
11805 SW 26 Street, Room 208
Miami, Florida 33175-2474
T (786) 315-2590 F (786) 315-2599
www.miamidade.gov/economy

DEPARTMENT OF REGULATORY AND ECONOMIC RESOURCES (RER)
BOARD AND CODE ADMINISTRATION DIVISION

NOTICE OF ACCEPTANCE (NOA)

Sto Corporation
3800 Camp Creek Parkway, Bldg. 1400 Ste. 120
Atlanta, GA 30331

SCOPE: This NOA is being issued under the applicable rules and regulations governing the use of construction materials. The documentation submitted has been reviewed and accepted by Miami-Dade County RER-Product Control Section to be used in Miami Dade County and other areas where allowed by the Authority Having Jurisdiction (AHJ).

This NOA shall not be valid after the expiration date stated below. The Miami-Dade County Product Control Section (In Miami Dade County) and/or the AHJ (in areas other than Miami Dade County) reserve the right to have this product or material tested for quality assurance purposes. If this product or material fails to perform in the accepted manner, the manufacturer will incur the expense of such testing and the AHJ may immediately revoke, modify, or suspend the use of such product or material within their jurisdiction. RER reserves the right to revoke this acceptance, if it is determined by Miami-Dade County Product Control Section that this product or material fails to meet the requirements of the applicable building code.

This product is approved as described herein, and has been designed to comply with the Florida Building Code, including the High Velocity Hurricane Zone.

DESCRIPTION: Sto Powerwall HI Wall Panel System

APPROVAL DOCUMENT: Drawing No. titled "Powerwall HI Large Missile Impact over Frame Construction", sheets 1 through 3 of 3, prepared by the manufacturer, dated 06/11/2012, signed and sealed by Kurt W. Heinrichs, P.E., bearing the Miami-Dade County Product Control renewal stamp with the Notice of Acceptance number and expiration date by the Miami-Dade County Product Control Section.

MISSILE IMPACT RATING: Large and Small Missile Impact Resistant.

LABELING: Each unit shall bear a permanent label with the manufacturer's name or logo, model (Powerwall HI), city, state and following statement: "Miami-Dade County Product Control Approved", unless otherwise noted herein. Each container (bucket or drum) needs to be labeled. Unit is further defined as each roll of reinforcing mat or mesh.

RENEWAL of this NOA shall be considered after a renewal application has been filed and there has been no change in the applicable building code negatively affecting the performance of this product.

TERMINATION of this NOA will occur after the expiration date or if there has been a revision or change in the materials, use, and/or manufacture of the product or process. Misuse of this NOA as an endorsement of any product, for sales, advertising or any other purposes shall automatically terminate this NOA. Failure to comply with any section of this NOA shall be cause for termination and removal of NOA.

ADVERTISEMENT: The NOA number preceded by the words Miami-Dade County, Florida, and followed by the expiration date may be displayed in advertising literature. If any portion of the NOA is displayed, then it shall be done in its entirety.

INSPECTION: A copy of this entire NOA shall be provided to the user by the manufacturer or its distributors and shall be available for inspection at the job site at the request of the Building Official.

This NOA **renews NOA # 07-0625.11** and consists of this page 1 and evidence page E-1, as well as approval document mentioned above.

The submitted documentation was reviewed by **Carlos M. Utrera, P.E.**

MIAMI-DADE COUNTY APPROVED

11/01/2012

NOA No. 12-0821.15
Expiration Date: August 2, 2017
Approval Date: November 8, 2012

NOTICE OF ACCEPTANCE: EVIDENCE SUBMITTED

A. DRAWINGS

1. Drawing titled "Powerwall HI Large Missile Impact over Frame Construction", sheets 1 through 3 of 3, prepared by the manufacturer, dated 06/11/2012, signed and sealed by Kurt W. Heinrichs, P.E.

B. TESTS *"Submitted under NOA # 07-0625.11"*

1. Test reports on: 1) Air Infiltration Test, per FBC, TAS 202-94
   2) Uniform Static Air Pressure Test, Loading per FBC TAS 202-94
   3) Water Resistance Test, per FBC, TAS 202-94
   4) Large Missile Impact Test per FBC, TAS 201-94
   5) Cyclic Wind Pressure Loading per FBC, TAS 203-94

   along with marked-up drawings and installation diagram of Powerwall HI Wall Panels, prepared by Hurricane Test Laboratory, LLC, Test Report No. **G064-0101-07**, dated 01/15/2007, signed and sealed by Vinu J. Abraham, P.E.

C. CALCULATIONS

1. None.

D. QUALITY ASSURANCE

1. Miami-Dade Department of Regulatory and Economic Resources (RER)

E. MATERIAL CERTIFICATIONS

1. None

F. STATEMENTS

1. Statement letter of code conformance to 2010 FBC issued by Testing Engineering & Consulting Services, Inc, dated 05/18/2012, signed and sealed by Kurt W. Heinrichs, P.E.

   "Submitted under NOA # 07-0625.11"

2. Code compliance letter issued by Hurricane Test Laboratory, LLC, dated 01/15/2007, signed and sealed by Vinu J. Abraham, P.E.
3. No financial interest and code compliance letter issued by Cerny & Ivey Engineers, Inc., dated 06/07/2007, signed and sealed by Christopher B. Shiver, P.E.

11/01/2012

Carlos M. Utrera, P.E.
Product Control Examiner
NOA No. 12-0821.15
Expiration Date: August 2, 2017
Approval Date: November 8, 2012

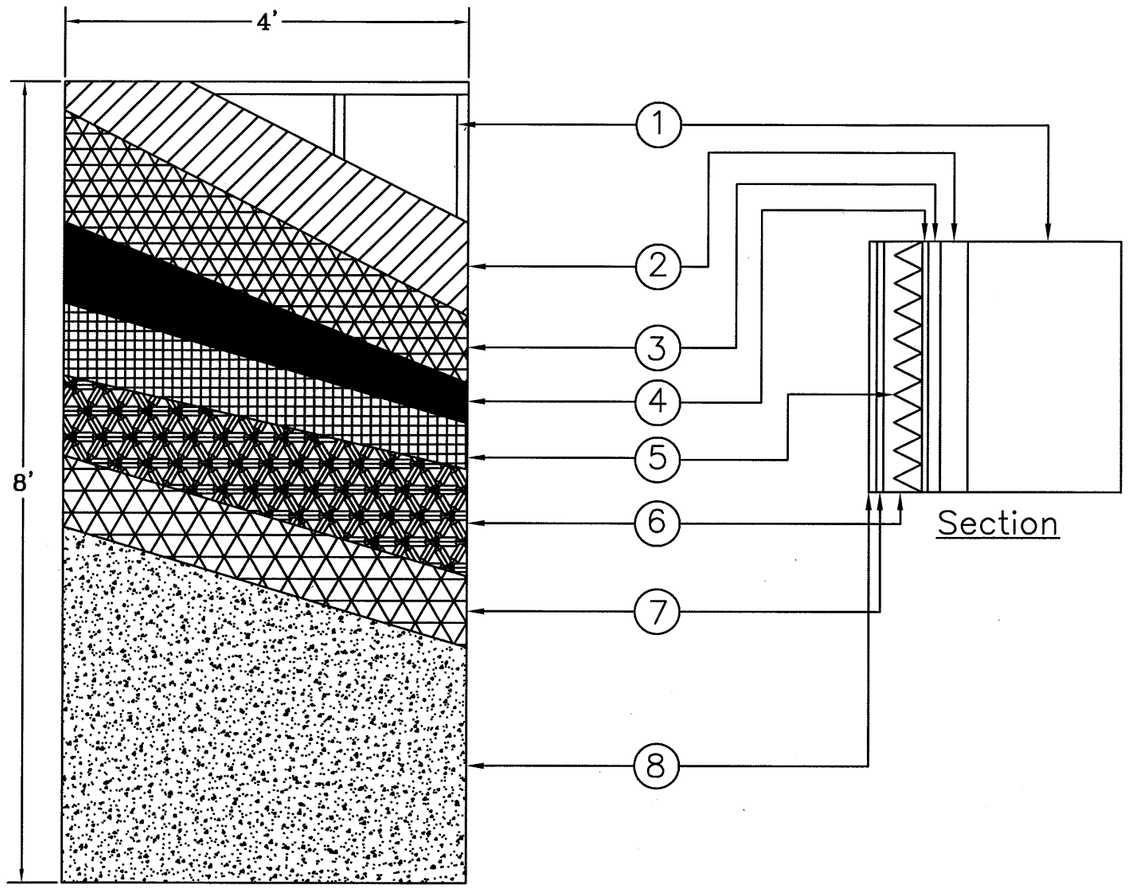

Design Pressure Rating +/-90 psf

KEY:

1. 1–5/8" X 3–5/8", 18 ga. steel studs at 16" on–center.
2. 5/8" thick G–P Dens–Glass Gold sheathing, fastened with No. 8 bugle head screws along studs and perimeter at 8" on–center.
3. 20 oz/yd² Sto Armor Mat XX embedded in Sto BTS Plus Coat on sheathing surface.
4. One layer, Type D, No. 15 asphalt saturated kraft building paper.
5. 2.5 lb/yd² galvanized expanded metal lath fastened to studs at 7" on–center with No. 6 X 1 5/8" round washer head screws.
6. Sto Powerwall Stucco base, 5/8" thick.
7. 4.5–oz/yd² Sto mesh embedded in Sto BTS Plus Base Coat on Sto Powerwall Stucco surface.
8. Sto Powerwall finish.

Description:

1.1 Substrates and Sto products approved with the system

1.1.1 Minimum 3–5/8" x 1– 5/8" x18 ga. steel studs @ 16" o.c.

1.1.2 Minimum 5/8" G–P Gypsum Dens–Glass Gold sheathing fastened with No.8 bugle head screws along studs and perimeter at 8" o.c.

1.1.3 Sto BTS Plus (No. 727): a premixed polymer modified portland cement dry base coat used to embed glass fiber reinforcing mesh on the surfaces of the sheathing and stucco in the Sto Powerwall–HI system.

1.1.4 Sto Armor Mat XX (No. 922): 20 oz/yd glass fiber reinforcing mesh applied to the outter surface of the Sto Powerwall–HI system.

1.1.5 Sto mesh (No. 920 E): 4.5 oz/yd glass fiber reinforcing mesh applied to the outter surface of the Sto Powerwall Stucco in the Sto Powerwall–HI system.

1.1.6 Sto Powerwall Stucco (No. 103): pre–bagged portland cement stucco mixed with sand and water in the field.

1.1.7 Sto Powerwall Finish (No.s 296,297,298,299): Ready–to–use polymeric finish available in four textures: Fine, Medium, Swirl, and Freeform.

1.2 Application

1.2.1 Sheathing surface shall be clean and dry. Any potential bond–inhibiting surface contaminants shall be removed.

1.2.2 Sto BTS Plus is mixed with 5 to 6.5 quarts of clean potable water per 47–lb bag and mixed with a drill and paddle.

1.2.3 Approximately 1/8" thick layer of Sto BTS Plus is applied to the sheathing surface and Sto Armor Mat XX is placed in the freshly applied base coat. A steel trowel is used to work the Sto Armor Mat XX into the base coat until the mesh is fully encapsulated. The base coat layer is cured overnight.

1.2.4 One layer of No. 15 building paper or other code–compliant water resistive barrier is applied to the surface of the cured base coat.

1.2.5 2.5 lb/yd² self–furring galvanized expanded metal lath is fastened to the studs at 7" on center with No. 6 X 1–5/8" round washer head screws.

1.2.6 Sto Powerwall Stucco is mixed with approximately 200 lbs of washed plaster sand and 4 gallons of water and applied to the metal lath in two applications. The first coat (scratch coat) shall be normally 3/8" thick and scored or scratched to provide bonding key. The second coat (brown coat) shall be applied to achieve a total thickness of 5/8" (measured from back of lath) and troweled smooth. The brown coat shall be applied as soon as the scratch coat is firm enough to support it. Alternatively, cure the scratch coat for 48 hours prior to proceeding with the brown coat.

1.2.7 Mix Sto BTS Plus base coat as described in 1.2.2 and apply an approximately 1/16" layer of base coat to the Sto Powerwall Stucco brown coat. Embeded Sto Mesh (4.5 oz/yd²) into the fresh base coat and fully encapsulate the mesh by working the base coat and mesh with a steel trowel. Allow the base coat to cure for 24 hours.

1.2.8 Apply a minimum 1/16" coat of the Sto finiah to the cured base coat.

General Notes:

1) This system has been designed in accordance with the 2010 Florida Building Code.
2) This system has been tested in accordance with Florida Building Code Protocol TAS 201, 202, and TAS 203 Impact Structural and Cyclic Testing.
3) This system shall be applied by a licensed plastering contractor.
4) The Engineer and or Architect of record for each project using this system shall design the framing and sheathing as required by governing codes and this document.
5) All studs used with this system shall be completely sheathed at the interior flange or bridged at a maximum every 5' of stud length or as specified by the stud manufacturer.
6) All steel studs shall be structural with 1–5/8" minimum yield strength of 33000 psi.

PRODUCT RENEWED
as complying with the Florida Building Code
Acceptance No 12-0821.15
Expiration Date 08/02/2017
By
Miami Dade Product Control

KURT W. HEINRICHS
LICENSE
No. 44505
STATE OF
FLORIDA
PROFESSIONAL ENGINEER
5/19/12

STO CORP.
3800 Camp Creek Pky
Bldg 1400 Suite 120
Atlanta GA 30331
for
Powerwall HI
Large Missile Impact
Over Frame Construction

 Date 6/11/12
Not To Scale

FLOOR LINE EXPANSION JOINT

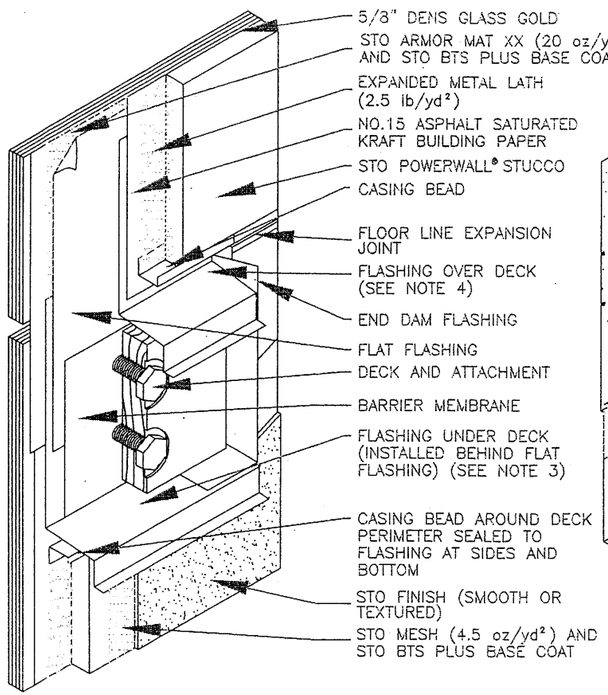

Notes:

1. The deck attachment method is independent of the cladding. Care must be taken to prevent water penetration into the wall assembly via the attachment mechanism.
2. Provide flat metal flashing on the surface of the wall where the deck is to be attached so that the finished stucco will overlap it a minimum 4" (100mm).
3. Slide a folded flashing up under the first flat flashing and position below the planned position of deck.
4. Provide a folded flashing over the planned deck position to direct water away from the deck connections.
5. Provide flashing end dams on each side of the second folded flashing. Set the end dams in sealant.
6. Provide barrier membrane over the flashing so it will be positioned behind the deck ledger.
7. Terminate the stucco a minimum of 2" (50mm) above the deck and ⅜" (10mm) from the perimeter of the flashing.

WINDOW JAMB

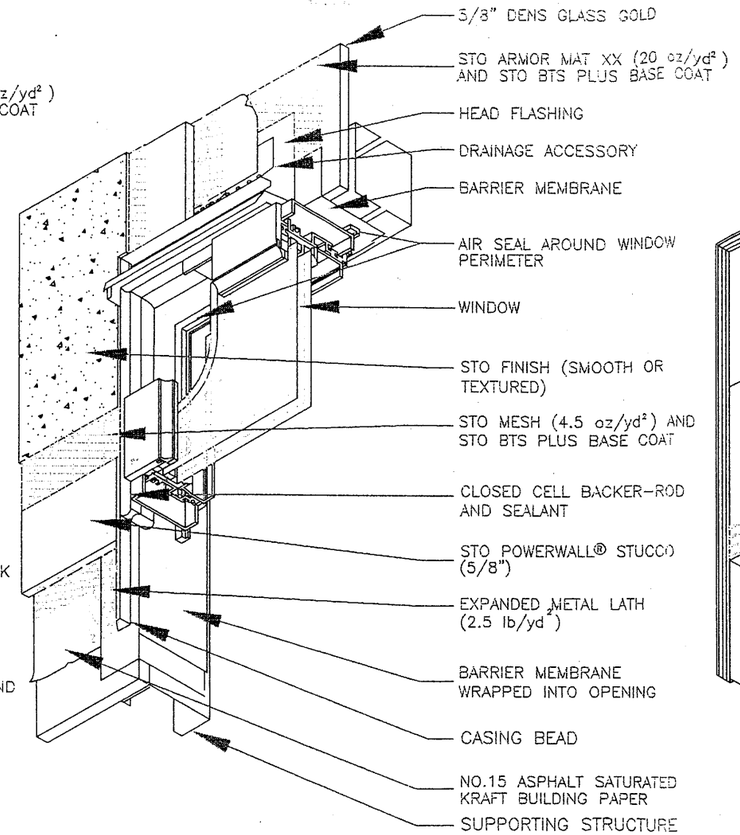

Notes:

1. Provide flashing installed over the window to direct water away from the window. Verify requirements for head flashing with local codes and window manufacturer. If not required, seal between window and stucco.
2. Protect rough opening against water penetration by wrapping with a barrier membrane.
3. Provide continous air barrier connection around perimeter of the window to reduce leaking, condensation related to air movement and sound and insect intrusion.
4. Provide window insert to optimize sealant configuration.

OVERHANG

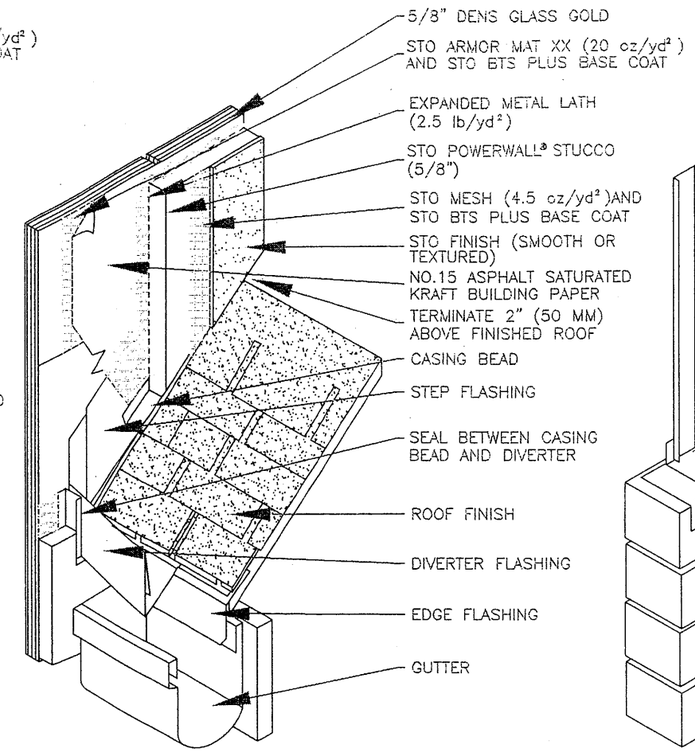

Notes:

1. Provide continuous roof flashing (as required by a design professional) to divert water from entering into wall system.
2. Seal Powerwall Hi System termination to the diverter flashing to prevent water from penetrating Powerwall Hi System.

CONTROL JOINT

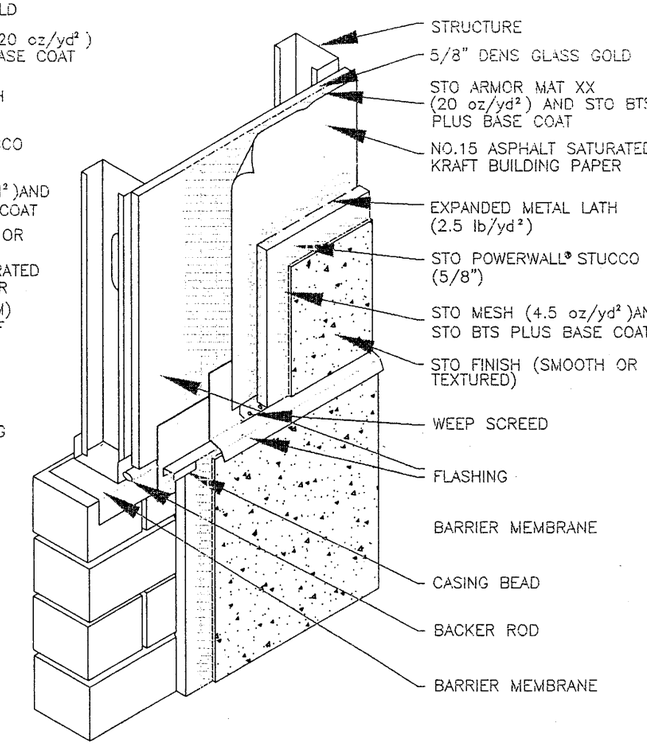

Notes:

1. Provide a drained joint at the interface of frame and masonry substrates.

PRODUCT RENEWED
as complying with the Florida Building Code
Acceptance No 12-0821.15
Expiration Date 08/02/2017
By _____
Miami Dade Product Control

KURT W. HEINRICHS
LICENSE
No. 44505
STATE OF FLORIDA
PROFESSIONAL ENGINEER

STO CORP.
3800 Camp Creek Pky
Bldg 1400 Suite 120
Atlanta GA 30331
for
Powerwall HI
Large Missile Impact
Over Frame Constructio

 Date 6/11/12
Not To Scale

WINDOW HEAD

N.T.S.

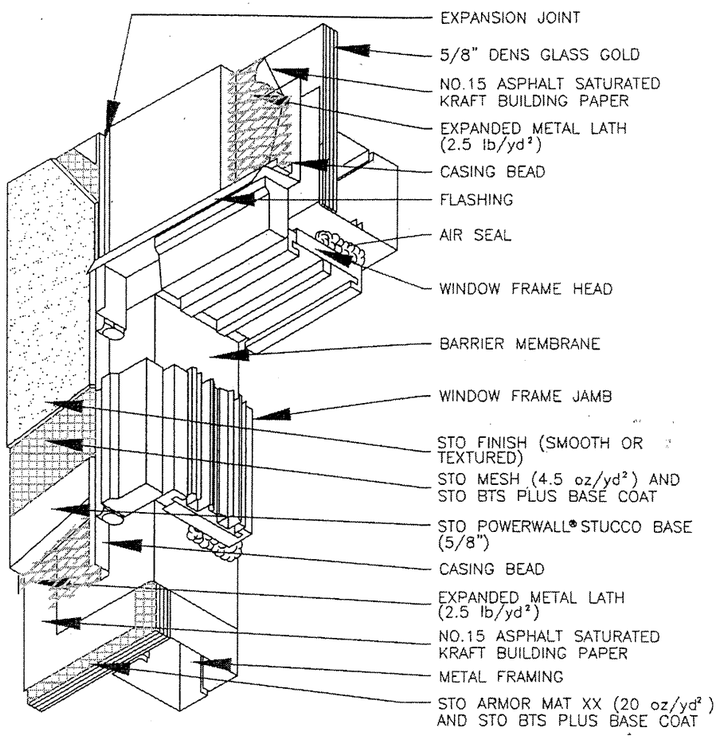

Notes:

1. Protect the rough opening from water penetration by wrapping with a barrier membrane. Direct any water penetration to the exterior at or above the sill flashing.
2. Provide head flashing over the window to direct water away from the window. Fold flashing over the window head–jamb interface.
3. Install expansion joint at the corner of the opening to allow for the release of stress in the stucco.

WINDOW SILL

N.T.S.

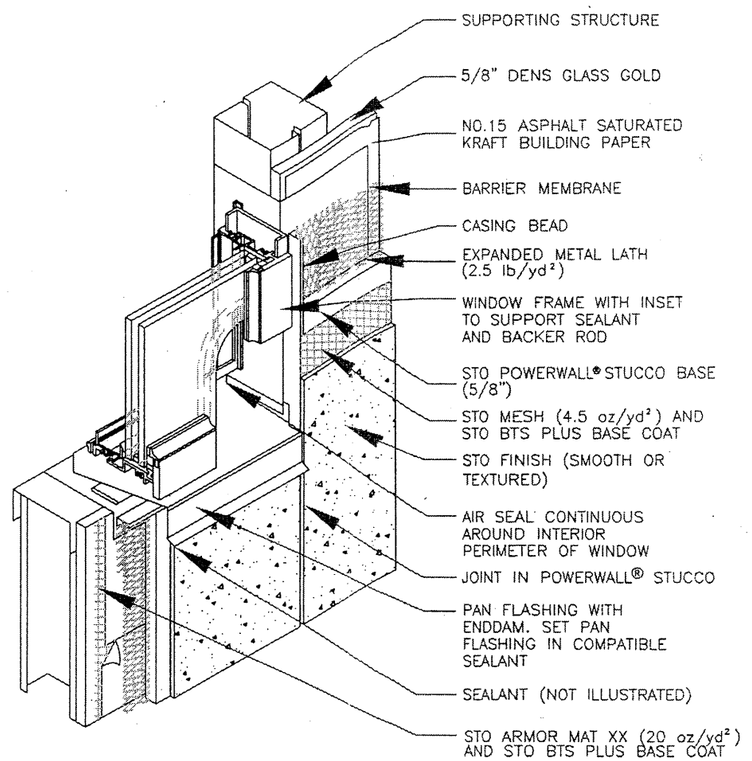

Notes:

1. Protect exposed Powerwall–Hi System at sill from weather damage during construction until permanently protected with sill and sealant.
2. Pan flashing @ jamb.

PARAPET

N.T.S.

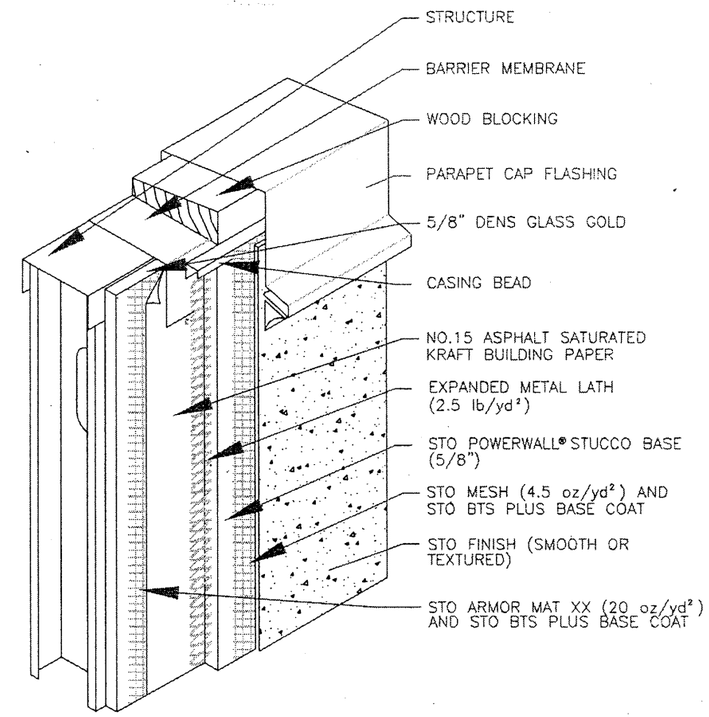

Notes:

1. Protect exposed Powerwall–Hi System at parapet from weather damage during construction until permanently protected with caping.
2. Extend dimension of caping overlap for muli–story construction/coastal regions to prevent wind driven rain from entering behind system.

PRODUCT RENEWED
as complying with the Florida Building Code
Acceptance No 12-0821.15
Expiration Date 08/02/2017
By _____
Miami Dade Product Control

KURT W. HEINRICHS
LICENSE
No. 44505
STATE OF FLORIDA
PROFESSIONAL ENGINEER

STO CORP.
3800 Camp Creek Pky
Bldg 1400 Suite 120
Atlanta GA 30331
for
Powerwall HI
Large Missile Impact
Over Frame Construction

Date 6/11/12
Not To Scale