MIAMI-DADE COUNTY
DEPARTMENT OF REGULATORY AND ECONOMIC RESOURCES (RER)
BOARD AND CODE ADMINISTRATION DIVISION

MIAMI-DADE COUNTY
PRODUCT CONTROL SECTION
11805 SW 26 Street, Room 208
T (786) 315-2590 F (786) 315-2599
www.miamidade.gov/economy

NOTICE OF ACCEPTANCE (NOA)

Continental Glass Systems, Inc.
325 West 74 Place
Hialeah, FL 33014

SCOPE:

This NOA is being issued under the applicable rules and regulations governing the use of construction materials. The documentation submitted has been reviewed and accepted by Miami-Dade County RER - Product Control Section to be used in Miami Dade County and other areas where allowed by the Authority Having Jurisdiction (AHJ).

This NOA shall not be valid after the expiration date stated below. The Miami-Dade County Product Control Section (In Miami Dade County) and/or the AHJ (in areas other than Miami Dade County) reserve the right to have this product or material tested for quality assurance purposes. If this product or material fails to perform in the accepted manner, the manufacturer will incur the expense of such testing and the AHJ may immediately revoke, modify, or suspend the use of such product or material within their jurisdiction. RER reserves the right to revoke this acceptance, if it is determined by Miami-Dade County Product Control Section that this product or material fails to meet the requirements of the applicable building code.

This product is approved as described herein, and has been designed to comply with the Florida Building Code, including the High Velocity Hurricane Zone.

DESCRIPTION: Series "5500" Aluminum Single Hung Window – L.M.I.

APPROVAL DOCUMENT: Drawing No. **CGS005**, titled "Series 5500 Alum. Single Hung Window", sheets 1 through 5 of 5, dated 08/06/09, with revision C dated 07/25/12, prepared by Building Drops, Inc., signed and sealed by Hermes F. Norero, P. E., bearing the Miami–Dade County Product Control Revision stamp with the Notice of Acceptance number and expiration date by the Miami–Dade County Product Control Section.

MISSILE IMPACT RATING: Large and Small Missile Impact Resistant

LABELING: Each unit shall bear a permanent label with the manufacturer's name or logo, city, state, model/series, and following statement: "Miami-Dade County Product Control Approved", unless otherwise noted herein.

RENEWAL of this NOA shall be considered after a renewal application has been filed and there has been no change in the applicable building code negatively affecting the performance of this product.

TERMINATION of this NOA will occur after the expiration date or if there has been a revision or change in the materials, use, and/or manufacture of the product or process. Misuse of this NOA as an endorsement of any product, for sales, advertising or any other purposes shall automatically terminate this NOA. Failure to comply with any section of this NOA shall be cause for termination and removal of NOA.

ADVERTISEMENT: The NOA number preceded by the words Miami-Dade County, Florida, and followed by the expiration date may be displayed in advertising literature. If any portion of the NOA is displayed, then it shall be done in its entirety.

INSPECTION: A copy of this entire NOA shall be provided to the user by the manufacturer or its distributors and shall be available for inspection at the job site at the request of the Building Official.

This NOA **revises NOA# 09-0630.15** and consists of this page 1 and evidence pages E-1 and E-2, as well as approval document mentioned above.

The submitted documentation was reviewed by **Manuel Perez, P.E.**

MIAMI-DADE COUNTY APPROVED

10/30/12

Continental Glass Systems, Inc.

NOTICE OF ACCEPTANCE: EVIDENCE SUBMITTED

A. DRAWINGS

1. Manufacturer's die drawings and sections.
2. Drawing No **CGS005**, titled "Series 5500 Alum. Single Hung Window", sheets 1 through 5 of 5, dated 08/06/09, with revision C dated 07/25/12, prepared by Building Drops, Inc., signed and sealed by Hermes F. Norero, P. E.

B. TESTS

1. Test reports on: 1) Air Infiltration Test, per FBC, TAS 202–94
   2) Uniform Static Air Pressure Test, Loading per FBC TAS 202–94
   3) Water Resistance Test, per FBC, TAS 202–94
   4) Large Missile Impact Test per FBC, TAS 201–94
   5) Cyclic Wind Pressure Loading per FBC, TAS 203–94
   6) Forced Entry Test, per FBC 2411 3.2.1, TAS 202–94

   along with marked–up drawings and installation diagram of an aluminum single hung window, prepared by Fenestration Testing Laboratory, Inc., Test Report No. **FTL – 5965**, dated 06/18/09, signed and sealed by Julio E. Gonzalez, P.E. ***(Submitted under previous NOA# 09-0630.15)***

C. CALCULATIONS

1. Anchor verification calculations and structural analysis, complying with FBC–2010, dated 08/20/12, prepared by Building Drops, Inc., signed, sealed by Hermes F. Norero, P.E.
2. Glazing complies with ASTM E1300-04

D. QUALITY ASSURANCE

1. Miami-Dade Department of Regulatory and Economic Resources (RER)

E. MATERIAL CERTIFICATIONS

1. Notice of Acceptance No. **11–1102.09** issued to **Solutia, Inc.** for their "**Saflex CP – Saflex and Saflex HP Composites Glass Interlayers with PET Core**" dated 06/14/12, expiring on 12/11/13.

Manuel Perez, P.E.
Product Control Examiner
NOA No. 12-0824.04
Expiration Date: October 07, 2014
Approval Date: November 08, 2012

NOTICE OF ACCEPTANCE: EVIDENCE SUBMITTED

F. STATEMENTS

1. Statement letter of conformance, complying with FBC-2010, and of no financial interest, dated August 21, 2012, prepared by Building Drops, Inc., signed and sealed by Hermes F. Norero, P.E.
2. Laboratory compliance letter for Test Report No. **FTL–5965,** issued by Fenestration Testing Laboratory, Inc., dated June 18, 2009, signed and sealed by Julio E. Gonzalez, P.E.
   (Submitted under previous NOA# 09-0630.15)

G. OTHER

1. Notice of Acceptance No. **09-0630.15**, issued to Continental Glass Systems, Inc. for their Series "5500-SH" Aluminum Single Hung Window – L.M.I., approved on 10/07/09 and expiring on 10/07/14.

Manuel Perez, P.E.
Product Control Examiner
NOA No. 12-0824.04
Expiration Date: October 07, 2014
Approval Date: November 08, 2012

CONTINENTAL GLASS SYSTEMS

SERIES 5500 ALUMINUM SINGLE HUNG WINDOW (IMPACT)

INSTALLATION NOTES:

1. ONE (1) INSTALLATION ANCHORS ARE REQUIRED AT EACH ANCHOR LOCATION SHOWN.
2. THE NUMBER OF INSTALLATION ANCHORS DEPICTED IS THE MINIMUM NUMBER OF ANCHORS TO BE USED FOR PRODUCT INSTALLATION.
3. INSTALL INDIVIDUAL INSTALLATION ANCHORS WITHIN A TOLERANCE OF ±1/2 INCH OF THE DEPICTED LOCATION IN THE ANCHOR LAYOUT DETAIL (I.E., WITHOUT CONSIDERATION OF TOLERANCES). TOLERANCES ARE NOT CUMULATIVE FROM ONE INSTALLATION ANCHOR TO THE NEXT.
4. SHIM AS REQUIRED AT EACH INSTALLATION ANCHOR WITH LOAD BEARING SHIM(S). MAXIMUM ALLOWABLE SHIM STACK TO BE 1/4 INCH. SHIM WHERE SPACE OF 1/16 INCH OR GREATER OCCURS. SHIM(S) SHALL BE CONSTRUCTED OF HIGH DENSITY PLASTIC OR BETTER.
5. FOR INSTALLATION INTO WOOD FRAMING USE #14 WOOD SCREWS OF SUFFICIENT LENGTH TO ACHIEVE 1 1/2 INCH MINIMUM EMBEDMENT INTO WOOD SUBSTRATE.
6. FOR INSTALLATION THROUGH STEEL STUD USE *1/4-20 GRADE 5* SELF-TAPPING SCREWS OF SUFFICIENT LENGTH TO ACHIEVE *3 THREADS* MINIMUM PENETRATION BEYOND STEEL FRAME SUBSTRATE.
7. FOR INSTALLATION THROUGH 1X BUCK TO CONCRETE/MASONRY, OR DIRECTLY INTO CONCRETE/MASONRY, USE 1/4 INCH DIAMETER ITW TAPCONS OF SUFFICIENT LENGTH TO ACHIEVE 1 1/4 INCH MINIMUM EMBEDMENT.
8. MINIMUM EMBEDMENT AND EDGE DISTANCE EXCLUDE WALL FINISHES, INCLUDING BUT NOT LIMITED TO STUCCO, FOAM, BRICK VENEER, AND SIDING.
9. INSTALLATION ANCHORS AND ASSOCIATED HARDWARE MUST BE MADE OF CORROSION RESISTANT MATERIAL OR HAVE A CORROSION RESISTANT COATING.
10. ALL 1X AND 2X BUCKS IN CONTACT WITH MASONRY OR CONCRETE SUBSTRATES TO BE PROTECTED PER 2007 FBC, CHAPTER 2326.
11. FOR HOLLOW BLOCK AND GROUT FILLED BLOCK, DO NOT INSTALL INSTALLATION ANCHORS INTO MORTAR JOINTS. EDGE DISTANCE IS MEASURED FROM FREE EDGE OF BLOCK OR EDGE OF MORTAR JOINT INTO FACE SHELL OF BLOCK.
12. INSTALLATION ANCHORS SHALL BE INSTALLED IN ACCORDANCE WITH ANCHOR MANUFACTURER'S INSTALLATION INSTRUCTIONS, AND ANCHORS SHALL NOT BE USED IN SUBSTRATES WITH STRENGTHS LESS THAN THE MINIMUM STRENGTH SPECIFIED BY THE ANCHOR MANUFACTURER.
13. INSTALLATION ANCHOR CAPACITIES FOR PRODUCTS HEREIN ARE BASED ON SUBSTRATE MATERIALS WITH THE FOLLOWING PROPERTIES:
    A. WOOD - MINIMUM SPECIFIC GRAVITY OF 0.55.
    B. CONCRETE -MINIMUM COMPRESSIVE STRENGTH OF 3000 PSI.
    C. GROUT-FILLED CMU- UNIT STRENGTH CONFORMS TO ASTM C-90 WITH MINIMUM COMPRESSIVE STRENGTH OF 2000 PSI AND GROUT CONFORMS TO ASTM C 476, MINIMUM GROUT COMPRESSIVE STRENGTH OF 2000 PSI.
    D. HOLLOW BLOCK CMU - UNIT STRENGTH CONFORMS TO ASTM C-90 WITH MINIMUM COMPRESSIVE STRENGTH OF 2000 PSI.
    E. STEEL - MINIMUM YIELD STRENGTH OF 33 KSI. MINIMUM 20 GA. (0.0346") WALL THICKNESS.

GENERAL NOTES:

1. THE PRODUCT SHOWN HEREIN IS DESIGNED AND MANUFACTURED TO COMPLY WITH THE 2010 FLORIDA BUILDING CODE (FBC), INCLUDING HVHZ AND HAS BEEN EVALUATED ACCORDING TO THE FOLLOWING:
    - TAS 201-94
    - TAS 202-94
    - TAS 203-94
2. ADEQUACY OF THE EXISTING STRUCTURAL CONCRETE/MASONRY, STEEL, AND 2X FRAMING AS A MAIN WIND FORCE RESISTING SYSTEM CAPABLE OF WITHSTANDING AND TRANSFERRING APPLIED PRODUCT LOADS TO THE FOUNDATION IS THE RESPONSIBILITY OF THE ENGINEER OR ARCHITECT OF RECORD FOR THE PROJECT OF INSTALLATION.
3. 1X AND 2X BUCKS (WHEN USED) SHALL BE DESIGNED AND ANCHORED TO PROPERLY TRANSFER ALL LOADS TO THE STRUCTURE. BUCK DESIGN AND INSTALLATION IS THE RESPONSIBILITY OF THE ENGINEER OR ARCHITECT OF RECORD FOR THE PROJECT OF INSTALLATION.
4. THE INSTALLATION DETAILS DESCRIBED HEREIN ARE GENERIC AND MAY NOT REFLECT ACTUAL CONDITIONS FOR A SPECIFIC SITE. IF SITE CONDITIONS CAUSE INSTALLATION TO DEVIATE FROM THE REQUIREMENTS DETAILED HEREIN, A LICENSED ENGINEER OR ARCHITECT SHALL PREPARE SITE SPECIFIC DOCUMENTS FOR USE WITH THIS DOCUMENT IN NON-HVHZ AREAS. IN HVHZ AREAS, ONE TIME PRODUCT APPROVAL TO BE OBTAINED FROM MIAMI-DADE PERA.
5. APPROVED IMPACT PROTECTIVE SYSTEM **IS NOT REQUIRED** ON THIS PRODUCT IN AREAS REQUIRING IMPACT RESISTANCE.
6. WINDOW FRAME MATERIAL: ALUMINUM 6063-T6
7. IN ACCORDANCE WITH THE 2010 FBC SEC. 2003.8.4 DISSIMILAR METALS INCLUDING FASTENERS THAT MAY COME INTO CONTACT WITH ALUMINUM UNIT FRAMING SHALL BE PROTECTED AS DEFINED IN SEC 2003.8.4.2.
8. GLASS MEETS THE REQUIREMENTS OF ASTM E 1300-04 GLASS CHARTS. SEE SHEET 5 FOR GLAZING DETAIL.

TABLE OF CONTENTS

SHEET	REVISION	SHEET DESCRIPTION
1	C	INSTALLATION & GENERAL NOTES
2	B	ELEVATIONS, ANCHOR LAYOUTS, & DP TABLE
3	C	VERTICAL SECTIONS
4	C	HORIZONTAL SECTIONS
5	C	COMPONENTS, GLAZING DETAIL & BILL OF MATERIALS

LARGE & SMALL
MISSILE IMPACT RATED

PRODUCT REVISED
as complying with the Florida Building Code
Acceptance No 12-0824.04
Expiration Date Oct. 7, 2014
By Manuel Perez
Miami Dade Product Control

CONTINENTAL Glass Systems
325 W. 74TH PLACE
HIALEAH, FL 33014
PH: (305) 231-1101 FX: (305) 231-1103

TITLE: SERIES 5500 ALUM. SINGLE HUNG WINDOW INSTALLATION & GENERAL NOTES

PREPARED BY:
BUILDING DROPS, INC.
398 E. DANIA BEACH BLVD. #338
DANIA BEACH, FL 33004
PH: 954.399.8478 FX: 954.744.4738

REVISIONS

NO.	DESCRIPTION	BY	DATE
A	T.O.C. PER MD COMMENTS	JLR	08.06.09
B	ADDED 2004 TO ASTM E 1300	HFN	08.25.09
C	FBC 2010 CODE CHANGE	JLA	07.25.12

8-21-2012
HERMES F. NOGERO, P.E.
FLORIDA P. E. NO. 73778
398 EAST DANIA BEACH BLVD. #338
DANIA BEACH, FL 33004
FBPE CERT. OF AUTHORIZATION NO. 29578

DATE: 07.25.12
DWN BY: JLA
CHK BY: HFN
SCALE: NTS
DWG #: CGS005
SHEET: 1 OF 5

8/20/2012 1:06 PM
s:\projects\continental glass systems\md-12-0210 2010 fbc code change (previously done nocs)\dwgs\cgs005 fbc 2010.dwg

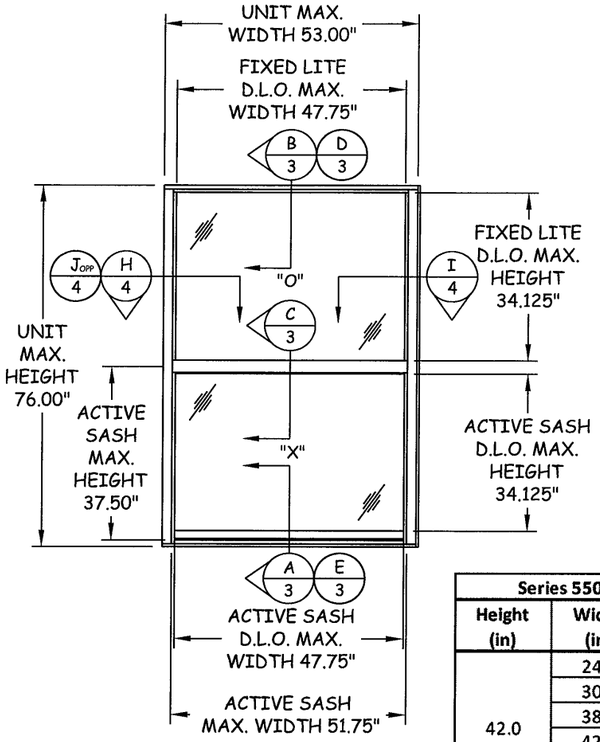

ELEVATION
SINGLE UNIT

Series 5500 Design Pressure Capacity - PSF			
Height (in)	Width (in)	w/ Reinforcement	w/o Reinforcement
42.0	24.0	90.0	90.0
	30.0	90.0	90.0
	38.0	90.0	90.0
	42.0	90.0	-
	48.0	82.0	-
	53.0	72.4	-
48.0	24.0	90.0	90.0
	30.0	90.0	90.0
	38.0	90.0	90.0
	42.0	89.7	-
	48.0	74.8	-
	53.0	65.7	-
54.0	24.0	90.0	90.0
	30.0	90.0	90.0
	38.0	90.0	90.0
	42.0	84.0	-
	48.0	69.4	-
	53.0	60.6	-
60.0	24.0	90.0	-
	30.0	90.0	-
	38.0	84.2	-
	42.0	79.8	-
	48.0	65.3	-
	53.0	56.7	-
76.0	24.0	85.4	-
	30.0	71.7	-
	38.0	60.5	-
	42.0	56.8	-
	48.0	52.5	-
	53.0	50.0	-

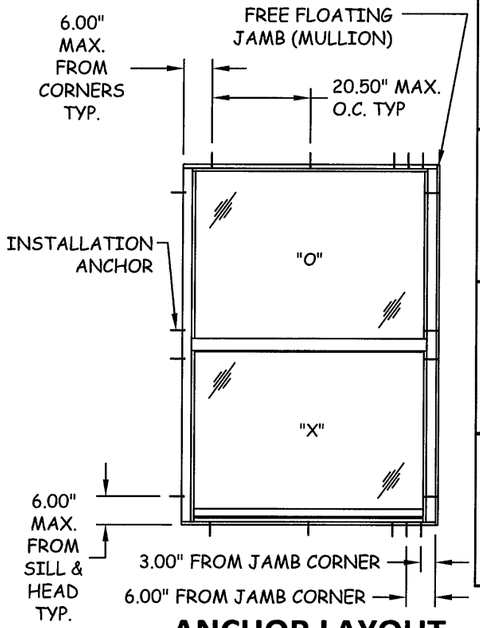

ANCHOR LAYOUT
SINGLE UNIT

REINFORCEMENT APPLIES TO BOTH MULLION AND FREE FLOATING JAMB MULLION ASSEMBLIES

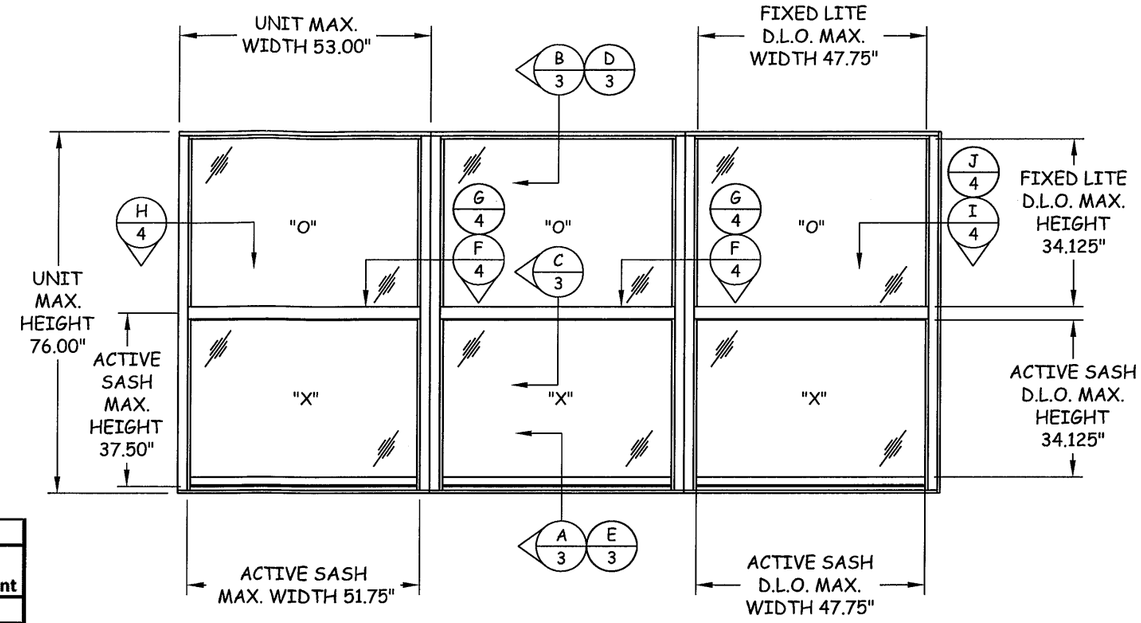

ELEVATION
MULTIPLE UNIT

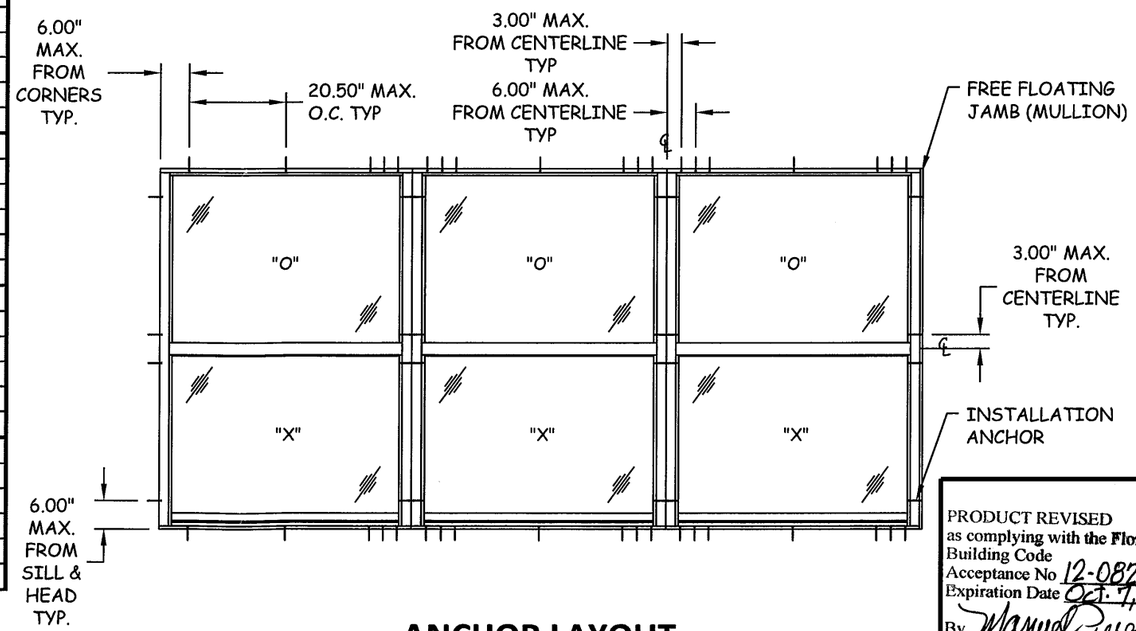

ANCHOR LAYOUT
MULTIPLE UNIT

PRODUCT REVISED
as complying with the Florida Building Code
Acceptance No 12-0824.04
Expiration Date Oct. 7, 2014
By Manuel Perez
Miami Dade Product Control

CONTINENTAL Glass Systems
325 W. 74TH PLACE
HIALEAH, FL 33014
PH: (305) 231-1101 FX: (305) 231-1103

TITLE: SERIES 5500 ALUM. SINGLE HUNG WINDOW ELEVATIONS, ANCHOR LAYOUTS & DP TABLE

PREPARED BY:
BUILDING DROPS, INC.
398 E. DANIA BEACH BLVD. #338
DANIA BEACH, FL 33004
PH: 954.399.8478 FX: 954.744.4738

REVISIONS

NO.	DESCRIPTION	BY	DATE
A	ANCHORS & PRESSURES PER M-D	JLR	08.06.09
B	FBC 2010 CODE CHANGE	JLA	07.25.12

HERMES F. MORERO, P.E.
FLORIDA P. E. NO. 73778
398 EAST DANIA BEACH BLVD. #338
DANIA BEACH, FL 33004
FBPE CERT. OF AUTHORIZATION NO. 29578

8-21-2012

DATE: 07.25.12
DWN BY: JLA
CHK BY: HFN
SCALE: NTS
DWG #: CGS005
SHEET: 2 OF 5

8/20/2012 1:06 PM
s:\projects\continental glass systems\md-12-0210 2010 fbc code change (previously done now)\dwgs\cgs005 fbc 2010.dwg

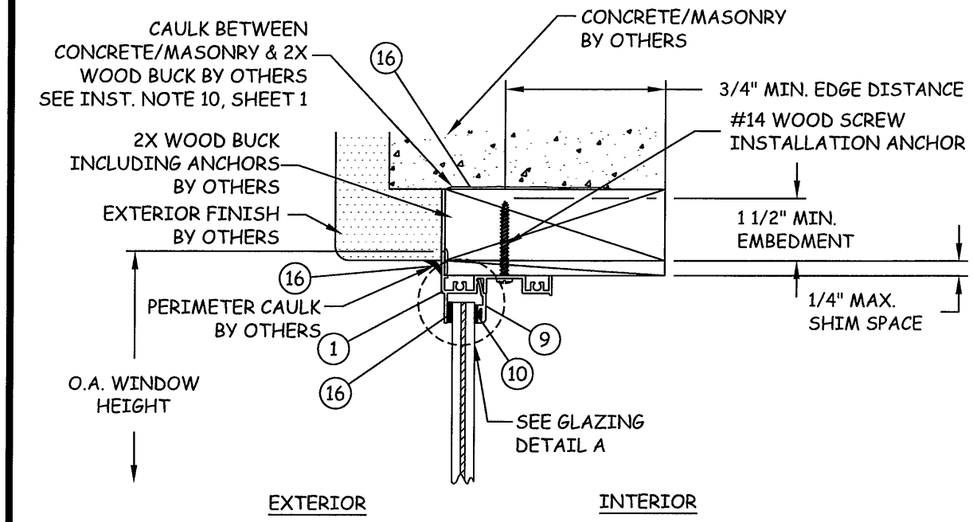

B/3 VERTICAL SECTION
2X WOOD BUCK

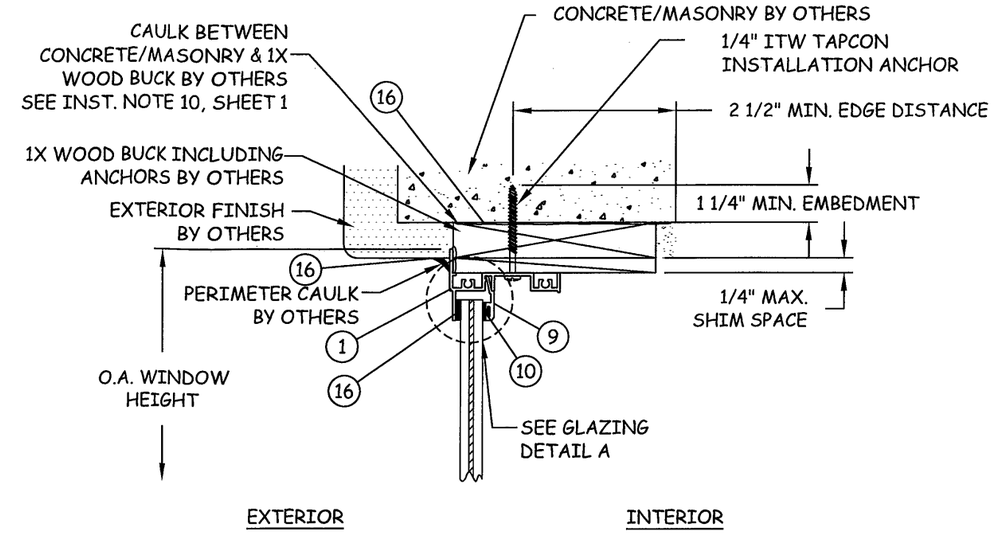

D/3 VERTICAL SECTION
1X BUCK/CONCRETE/MASONRY

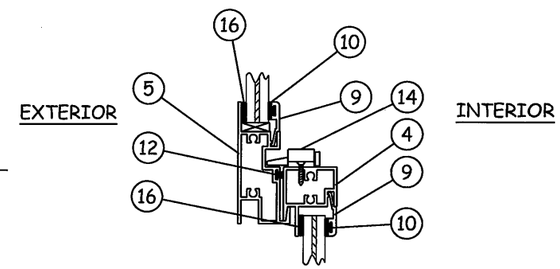

C/3 VERTICAL SECTION
MEETING RAIL

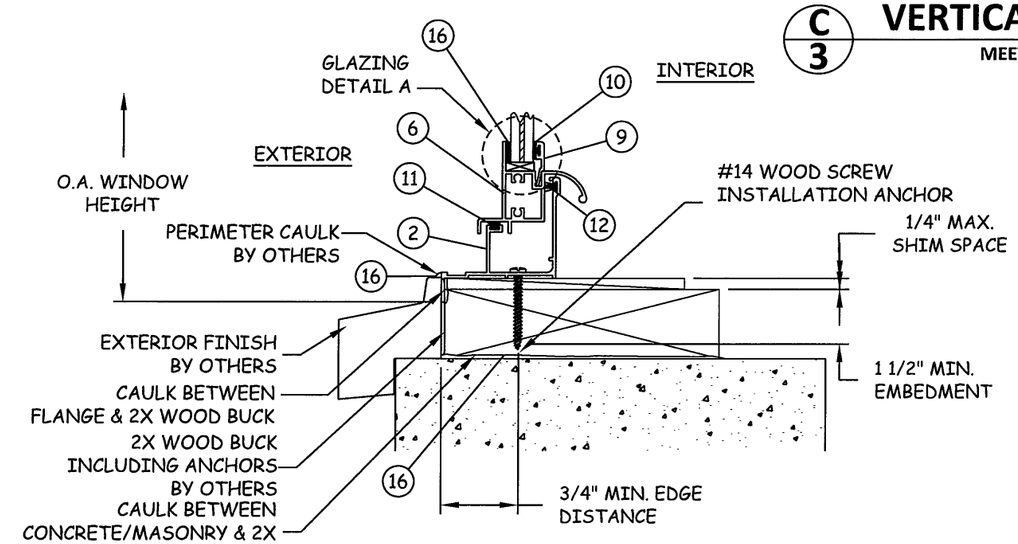

A/3 VERTICAL SECTION
SILL - 2X WOOD BUCK

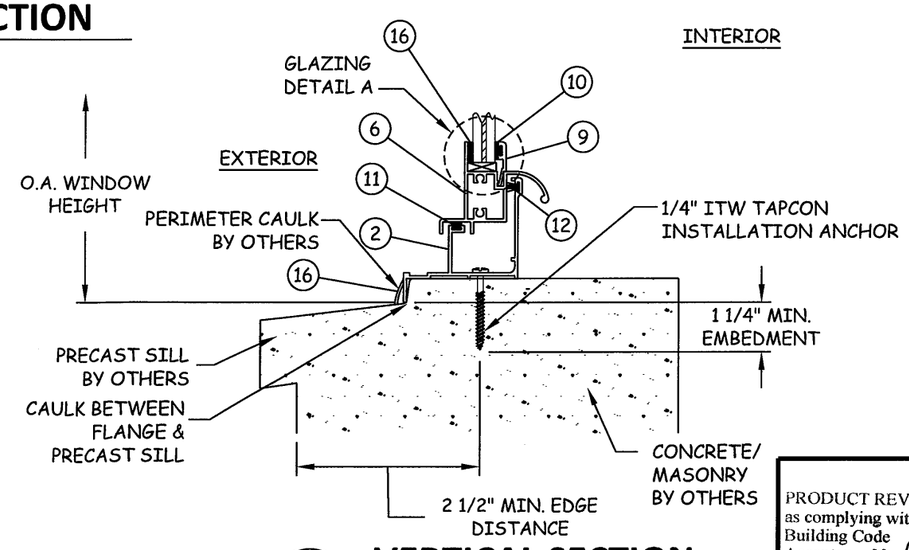

E/3 VERTICAL SECTION
SILL - CONCRETE/MASONRY

PRODUCT REVISED
as complying with the Florida Building Code
Acceptance No 12-0824.04
Expiration Date Oct. 7, 2014
By Manuel Perez
Miami-Dade Product Control

CONTINENTAL Glass Systems
325 W. 74TH PLACE
HIALEAH, FL 33014
PH: (305) 231-1101 FX: (305) 231-1103

TITLE: SERIES 5500 ALUM. SINGLE HUNG WINDOW VERTICAL SECTIONS

PREPARED BY:
BUILDING DROPS, INC.
398 E. DANIA BEACH BLVD. #338
DANIA BEACH, FL 33004
PH: 954.399.8478 FX: 954.744.4738

REVISIONS

NO.	DESCRIPTION	BY	DATE
B	ITEM 16 & WOOD PROTECTION	HFN	08.25.09
C	FBC 2010 CODE CHANGE	JLA	07.25.12

8-21-2012
HERMES F. NOPERO, P.E.
FLORIDA P. E. NO. 72778
398 EAST DANIA BEACH BLVD. #338
DANIA BEACH, FL 33004
FBPE CERT. OF AUTHORIZATION NO. 29578

DATE: 07.25.12
DWN BY: JLA
CHK BY: HFN
SCALE: NTS
DWG #: CGS005
SHEET: 3 OF 5

8/20/2012 1:06 PM
s:\projects\continental glass systems\ind-12-0210 2010 fbc code change (previously done now)\dwgs\cgs005 fbc 2010.dwg

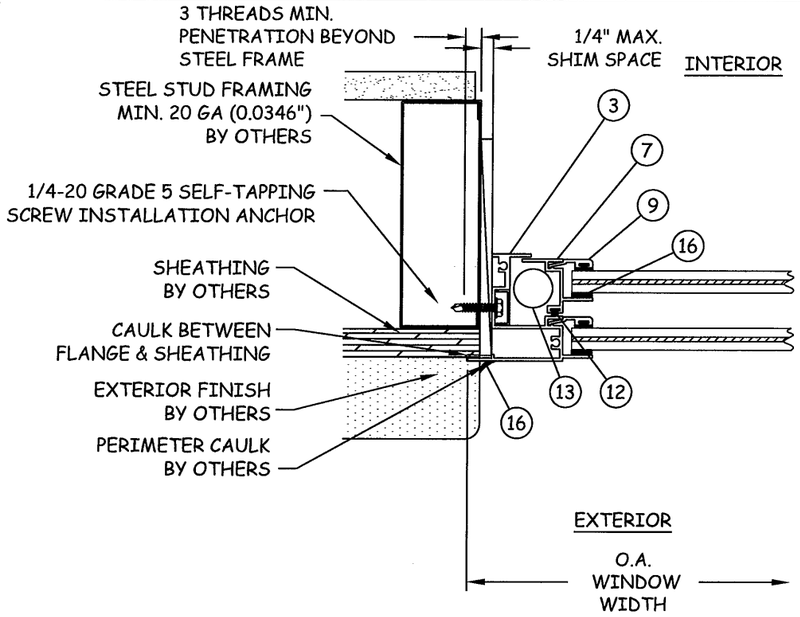

H/4 HORIZONTAL SECTION

JAMB - STEEL STUD FRAME

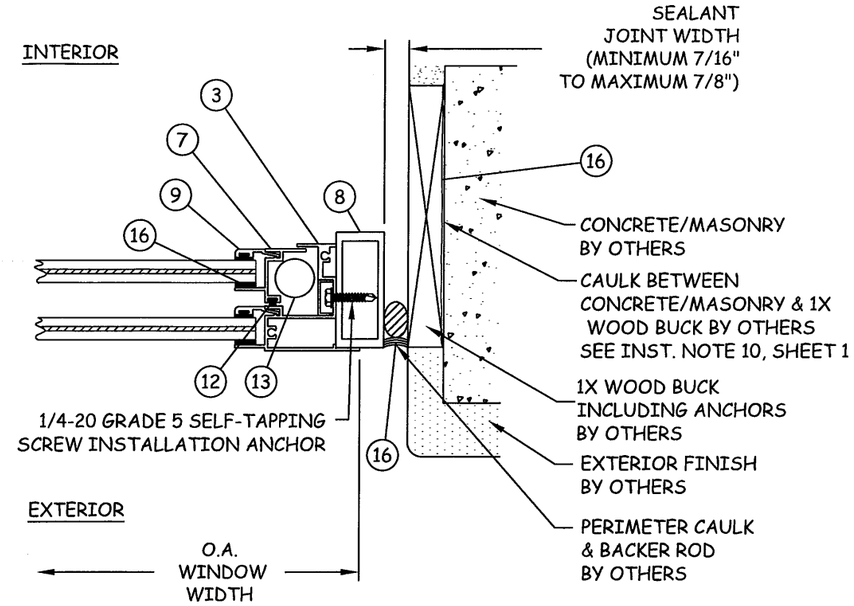

I/4 HORIZONTAL SECTION

FREE FLOATING JAMB

NOTES:
1. BACKER ROD DIAMETER EQUALS SEAL WIDTH X 120%
2. SEALANT DEPTH IS 7/16" (-0", +1/16") FOR SEALANT WIDTH UP TO 7/8"

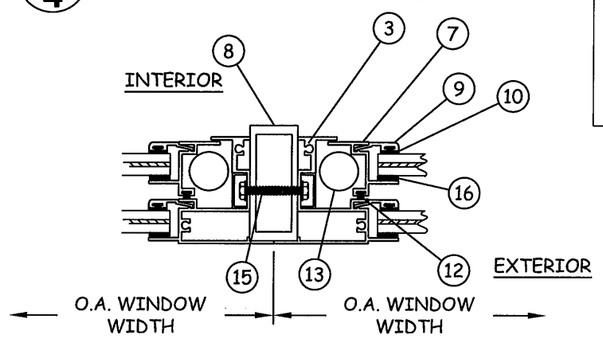

G/4 HORIZONTAL SECTION

VERTICAL NON-REINFORCED MULLION

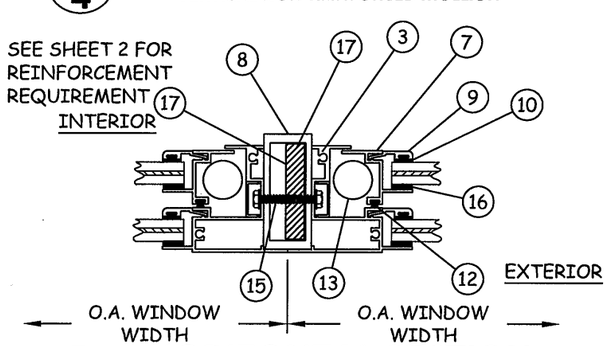

F/4 HORIZONTAL SECTION

VERTICAL REINFORCED MULLION

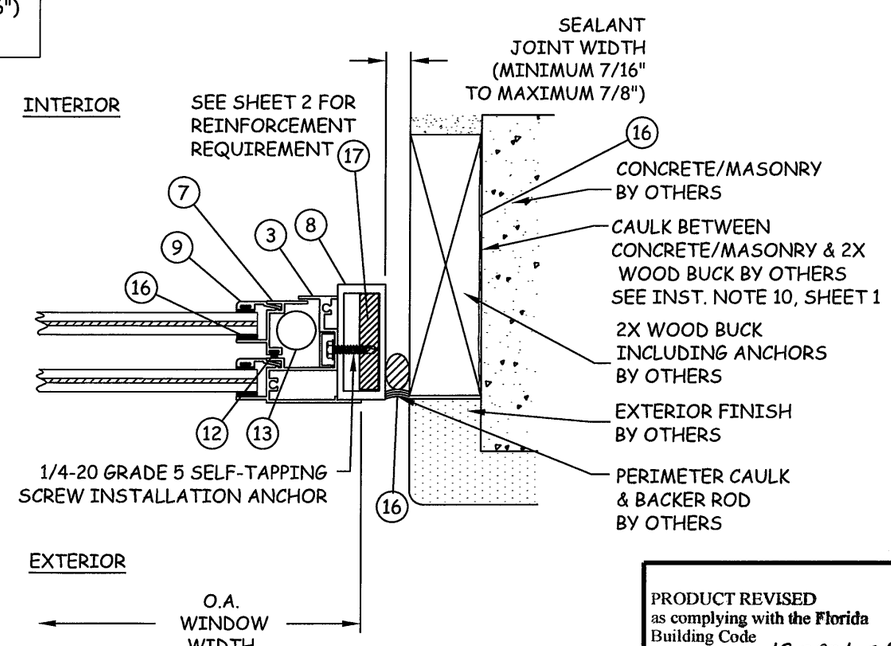

J/4 HORIZONTAL SECTION

FREE FLOATING REINFORCED JAMB

PRODUCT REVISED
as complying with the Florida Building Code
Acceptance No 12-0824.04
Expiration Date Oct. 7, 2014
By Manuel Perez
Miami Dade Product Control

CONTINENTAL Glass Systems
325 W. 74TH PLACE
HIALEAH, FL 33014
PH: (305) 231-1101 FX: (305) 231-1103

TITLE: SERIES 5500 ALUM. SINGLE HUNG WINDOW HORIZONTAL SECTIONS

PREPARED BY: BUILDING DROPS, INC.
398 E. DANIA BEACH BLVD. #338
DANIA BEACH, FL 33004
PH: 954.399.8478 FX: 954.744.4738

REVISIONS

NO.	DESCRIPTION	BY	DATE
A	SEALANT WIDTH PER MD	JLR	08.06.09
B	ITEM 16 & REINF. NOTE	HFN	08.25.09
C	FBC 2010 CODE CHANGE	JLA	07.25.12

8-21-2012

HERMES F. NORERO, P.E.
FLORIDA P. E. NO. 73778
398 EAST DANIA BEACH BLVD. #338
DANIA BEACH, FL 33004
FBPE CERT. OF AUTHORIZATION NO. 29578

DATE: 07.25.12
DWN BY: JLA
CHK BY: HFN
SCALE: NTS
DWG #: CGS005
SHEET: 4 OF 5

8/20/2012 1:06 PM
s:\projects\continental glass systems\md-12-0210 2010 fbc code change (previously done noas)\dwgs\cgs005 fbc 2010.dwg

1 HEAD 5500-01
6063-T6
0.062" TYP. WALL THICKNESS

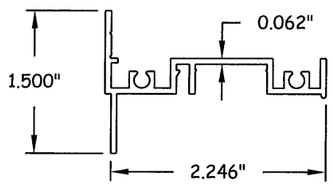

2 SILL 5500-02
6063-T6
0.062" TYP. WALL THICKNESS

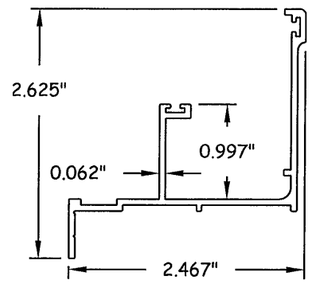

3 JAMB 5500-03
6063-T6
0.063" TYP. WALL THICKNESS

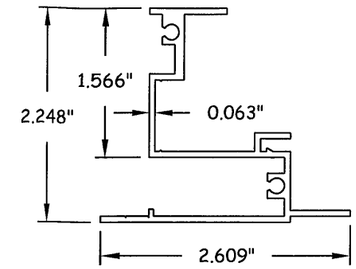

4 TOP VENT 5500-05
6063-T6
0.062" TYP. WALL THICKNESS

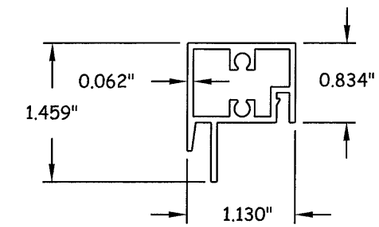

5 MEETING RAIL 5500-04
6063-T6
0.062" TYP. WALL THICKNESS

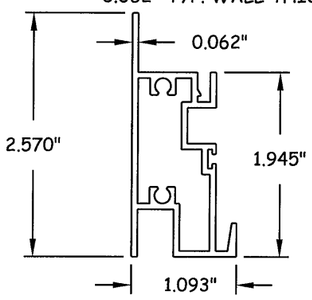

6 BOTTOM VENT 5500-06
6063-T6
0.062" TYP. WALL THICKNESS

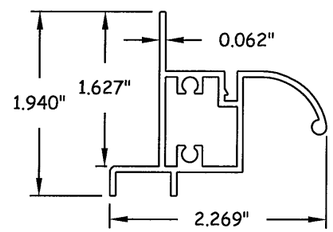

7 SIDE RAIL 5500-07
6063-T6
0.062" TYP. WALL THICKNESS

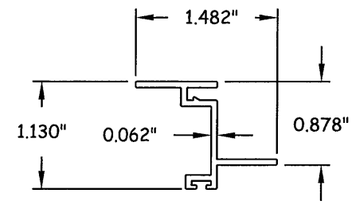

8 MULLION 5500-10
6063-T6

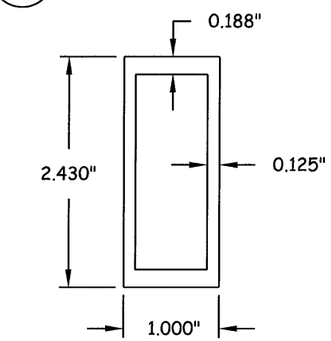

9 GLAZING BEAD 5500-08
6063-T6
0.177" TYP. WALL THICKNESS

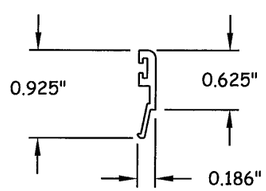

17 REINFORCEMENT
6063-T6

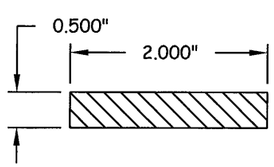

BILL OF MATERIALS

ITEM #	PART #	DESCRIPTION	MATERIAL	MANUFACTURER
1	5500-01	HEAD	6063-T6	CGS
2	5500-02	SILL	6063-T6	CGS
3	5500-03	JAMB	6063-T6	CGS
4	5500-05	TOP VENT	6063-T6	CGS
5	5500-04	MEETING RAIL	6063-T6	CGS
6	5500-06	BOTTOM VENT	6063-T6	CGS
7	5500-07	SIDE RAIL	6063-T6	CGS
8	5500-10	MULLION	6063-T6	CGS
9	5500-08	GLAZING BEAD	6063-T6	CGS
10		GLASS SPACER	VINYL	FRANK LOWE
11		VINYL BULB		CGS
12		FIN-SEAL		ULTRAFAB
13		BALANCER		CALDWELL
14		CAM LOCKS		DNS
15		#14 X 1/2" PH SMS	STAINLESS STEEL	
16		STRUCTURAL SILICONE DOW 795	SILICONE	DOW CORNING
17		MULLION REINFORCEMENT	6063-T6	
18		#10 X 1" PH SMS	STAINLESS STEEL	

GLAZING NOTES:
1. SOLUTIA VANCEVA INTERLAYER APPROVED UNDER SEPARATE NOA & MEETS FBC 2010 REQUIREMENTS.
2. PER SECTION 2411.3.3.1 OF THE 2010 FBC ALL GLASS LITES EXCEEDING 36" IN WIDTH SHALL USE MIN. TWO (2) APPROVED SETTING BLOCKS. SETTING BLOCKS SHALL BE NEOPRENE WITH A SHORE "A" DUROMETER HARDNESS OF 70-90 OR APPROVED EQUAL.

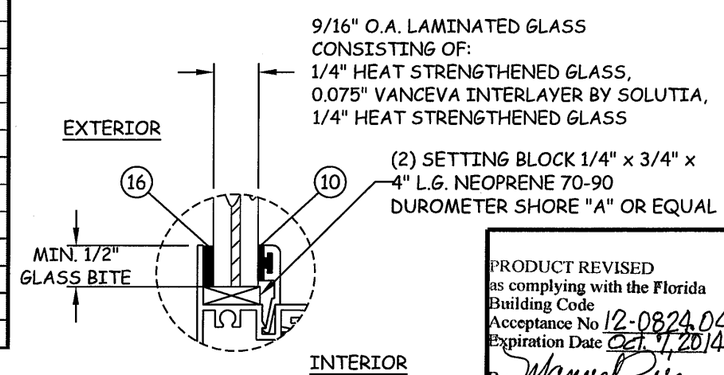

GLAZING DETAIL A

PRODUCT REVISED
as complying with the Florida Building Code
Acceptance No 12-0824.04
Expiration Date Oct. 7, 2014
By Manuel Pino
Miami Dade Product Control

CONTINENTAL Glass Systems
325 W. 74TH PLACE
HIALEAH, FL 33014
PH: (305) 231-1101 FX: (305) 231-1103

TITLE: SERIES 5500 ALUM. SINGLE HUNG WINDOW COMPONENTS, GLAZING DETAIL & BILL OF MATERIALS

PREPARED BY:
BUILDING DROPS, INC.
398 E. DANIA BEACH BLVD. #338
DANIA BEACH, FL 33004
PH: 954.399.8478 FX: 954.744.4738

REVISIONS

NO.	DESCRIPTION	BY	DATE
A	GLASS BITE PER MIAMI-DADE	JLR	08.06.09
B	GLASS BITE PER MIAMI-DADE	HFN	08.25.09
C	FBC 2010 CODE CHANGE	JLA	07.25.12

8-21-2012
HERMES F. NORERO, P.E.
FLORIDA P. E. NO. 73776
398 EAST DANIA BEACH BLVD. #338
DANIA BEACH, FL 33004
(FBPE CERT. OF AUTHORIZATION NO. 29578)

DATE: 07.25.12
DWN BY: JLA
CHK BY: HFN
SCALE: NTS
DWG #: CGS005
SHEET: 5 OF 5

8/20/2012 1:05 PM
s:\projects\continental glass systems\md-12-0210 2010 fbc code change (previously done noas)\dwgs\cgs005 fbc 2010.dwg